YAMAHA

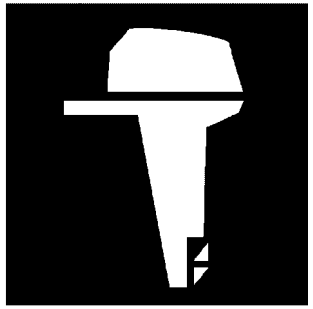

PARTS CATALOGUE
CATALOGUE DE PIECES DETACHEES

VF175A

YAMAHA
GENUINE
Parts & Accessories

1Y6FH-300FA

( )

VF175A
PARTS CATALOGUE
©2024 by Yamaha Motor Co., Ltd.
1st edition, June 2024
All rights reserved.
Any reprinting or unauthorized use
without the written permission of
Yamaha Motor Co., Ltd.
is expressly prohibited.
Printed in Japan.

VF175A
CATALOGUE DE PIECES DETACHEES
©2024 par Yamaha Motor Co., Ltd.
1re édition, juin 2024
Tous droits réservés
Toute réimpression ou utilisation
non autorisée sans la permission écrite
de Yamaha Motor Co., Ltd.
est formellement interdite.
Imprimé au Japon

FOREWORD

This Parts Catalogue is related to the parts for the model(s) on the cover page. When you are ordering replacement parts, please refer to this Parts Catalogue and quote both part numbers and part names correctly.

1. Modifications or additions which have been made after the issue of the Parts Catalogue will be announced in the Parts News.
   It is advisable that you make the necessary corrections to the Parts Catalogue according to the Parts News.

2. Abbreviations
   The following abbreviations are used in this Parts Catalogue.
   "UR" Use specified parts number.
   "UN" Use as many as needed.
   "AP" Alternate Parts
   "LM" Locally Made (Parts need to be ordered locally)
   "F#" Frame No. (Applicable machine No.)
   "O/S" Over Size

3. The number of components for assembly
   - Parts, which are to be supplied in an assembly, are listed with a dot (.) in front of the part name as shown below.
   - The numeral appearing to the right of each component part indicates the quantity of parts for each assembly unit.

PART NO.	DESCRIPTION	Q'TY	REMARKS
2F5–83310–60	FRONT FLASHER LIGHT ASSY	2	
115–83311–60	.BULB (6V–18W)	1	

4. Applicable colours of graphics are represented in the "REMARKS" as shown below.

PART NO.	DESCRIPTION	Q'TY	REMARKS
2N4–24110–00–X5	FUEL TANK COMP.	2	MXR
3J1–24240–10	.GRAPHIC, FUEL TANK	1	FOR MXR

5. Note that the illustrations for reference in finding parts numbers are not to be used for assembling. When assembling, please use the applicable service manual.

6. The asterisk (*) before a reference number indicates modified items after the first edition.

7. Applicable Serial No.
   Engine Serial No.

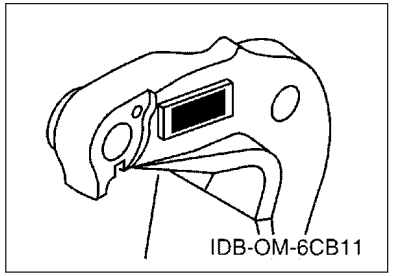

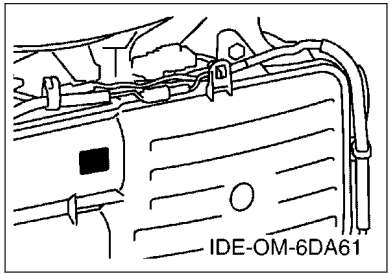

8. Applicable Engine Starting Serial No.

Model	Serial No.	Model	Serial No.
VF175A	6FH-1009982		

9. Applicable Colour Code

Abbreviation	Colour Name	Colour Code
SBL	SHINY BLACK	00NA

10. Quantity Column Information

Column No.	Name Of Q'ty Column	Applicable Model
1	XA	VF175XA
2	LA	VF175LA

AVANT–PROPOS

Ce catalogue de pièces détachées concerne les pièces pour le(s) modèle(s) indiqué(s) sur la page de couverture. Lorsque vous commandez des pièces de rechange, veuillez vous référer à ce catalogue de pieces détachées et indiquer clairement les numéros et les noms des pièces détachées.

1. Les modifications ou ajouts ayant été effectués après la parution du catalogue de pièces détachées seront décrits dans les Bulletins d'information concernant les pièces détachées.
   Il est recommandé que vous apportiez les corrections nécessaires au catalogue des pièces détachées en vous référant aux Bulletins d'information.

2. Abréviations
   Dans ce catalogue, les abréviations suivantes sont utilisées:
   "UR" Utiliser le numéro de pièces spécifié.
   "UN" Utiliser autant que nécessaire.
   "AP" Pièces de substitution
   "LM" Fabrication locale (les pièces doivent être commandées localement.)
   "F#" N° de cadre (applicable au N° de série)
   "O/S" Surdimensionné

3. Nombre de pièces d'un assemblage
   - Les pièces fournies comme composants d'un assemblage sont précédées d'un point (.) de la manière indiquée ci–dessous.
   - Le chiffre apparaissant à la droite de chaque composant indique la quantité de pièces pour chaque unité d'assemblage.

N° PIECES	DESCRIPTION	QTE	REMARQUES
2F5–83310–60	ENS. CLIGNOTANT AVANT	2	
115–83311–60	.AMPOULE (6V–18W)	1	

4. Les couleurs concernant les graphiques sont indiquées dans la colonne "REMARQUES", comme indiqué ci–dessous.

N° PIECES	DESCRIPTION	QTE	REMARQUES
2N4–24110–00–X5	RESERVOIR A ESSENCE.	2	MXR
3J1–24240–10	.GRAPHIQUE	1	POUR MXR

5. Veuillez noter que les illustrations sont indiquées à titre de référence pour trouver les numéros de pièces, non pour être utilisées lors de l'assemblage. Lors de l'assemblage, veuillez utiliser le manuel d'entretien adéquat.

6. L'astérisque (*) placé devant un numéro de référence indique des éléments qui ont été modifiés après la première édition.

7. N° de série applicable
   N° de Série du moteur

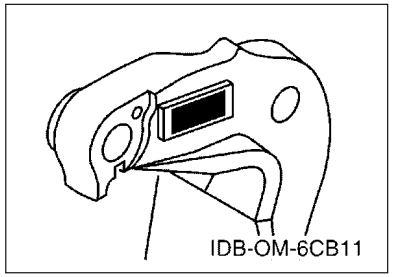

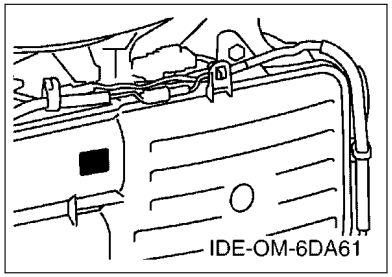

8. N° de série initial du moteur applicable

Modèle	N° de série	Modèle	N° de série
VF175A	6FH-1009982		

9. Code couleur applicable

Abréviation	Nom de la couleur	Code couleur
SBL	SHINY BLACK	00NA

10. Informations relatives à la colonne Quantité

N° de la colonne	Nom de la colonne Qté	Modèle applicable
1	XA	VF175XA
2	LA	VF175LA

CONTENTS

SCHEDULED SERVICE PARTS....1
TOP COWLING....2
CYLINDER & CRANKCASE 1....3
CRANKSHAFT & PISTON....5
CYLINDER & CRANKCASE 2....6
CYLINDER & CRANKCASE 3....7
CYLINDER & CRANKCASE 4....9
VALVE....10
INTAKE 1....13
INTAKE 2....14
INTAKE 3....16
FUEL INJECTION PUMP 1....17
FUEL INJECTION PUMP 2....19
FUEL 1....20
FUEL 2....22
GENERATOR....23
ELECTRICAL 1....25
ELECTRICAL 2....27
ELECTRICAL 3....28
ELECTRICAL 4....29
ELECTRICAL 5....30
STARTING MOTOR....31
BOTTOM COWLING 1....32
BOTTOM COWLING 2....34
BOTTOM COWLING 3....35
CONTROL....36
BRACKET 1....38
BRACKET 2....40
BRACKET 3....42
BRACKET 4....44
POWER TRIM & TILT ASSY 1....46
POWER TRIM & TILT ASSY 2....49
UPPER CASING....50
OIL PAN....52
LOWER CASING & DRIVE 1....53
LOWER CASING & DRIVE 2....57
STEERING GUIDE....59
OPTIONAL PARTS 1....60
OPTIONAL PARTS 2....61
REPAIR KIT 1....62
REPAIR KIT 2....63

INDEX

NUMERICAL INDEX....65

TABLE DES MATIERES

PIECES MAINTENANCE PERIODIQUE.....1
CAPOT SUPERIEUR..... 2
CYLINDRE & CARTER 1..... 3
VILEBREQUIN & PISTON.....5
CYLINDRE & CARTER 2..... 6
CYLINDRE & CARTER 3..... 7
CYLINDRE & CARTER 4..... 9
SOUPAPE..... 10
ADMISSION 1.....13
ADMISSION 2.....14
ADMISSION 3.....16
POMPE A INJECTEUR 1..... 17
POMPE A INJECTEUR 2..... 19
CARBURANT 1..... 20
CARBURANT 2..... 22
GENERATRICE.....23
PARTIE ELECTRIQUE 1.....25
PARTIE ELECTRIQUE 2.....27
PARTIE ELECTRIQUE 3.....28
PARTIE ELECTRIQUE 4.....29
PARTIE ELECTRIQUE 5.....30
DEMARREUR ELECTRIQUE.....31
CAPOT INFERIEUR 1.....32
CAPOT INFERIEUR 2.....34
CAPOT INFERIEUR 3.....35
COMMANDE..... 36
SUPPORT 1..... 38
SUPPORT 2..... 40
SUPPORT 3..... 42
SUPPORT 4..... 44
PUISSANCE PARER ET INCLINER 1..... 46
PUISSANCE PARER ET INCLINER 2..... 49
FOURREAU.....50
VENTILATEUR D'HUILE..... 52
BOITIER D'HELICE TRANSMISSION1.....53
BOITIER D HELICE TRANSMISSION2..... 57
FIXATION DE DIRECTION..... 59
PIECES OPTIONNELLES 1.....60
PIECES OPTIONNELLES 2.....61
KITS DE REPARATION 1..... 62
KITS DE REPARATION 2..... 63

INDEX

INDEX NUMERIQUE.....65

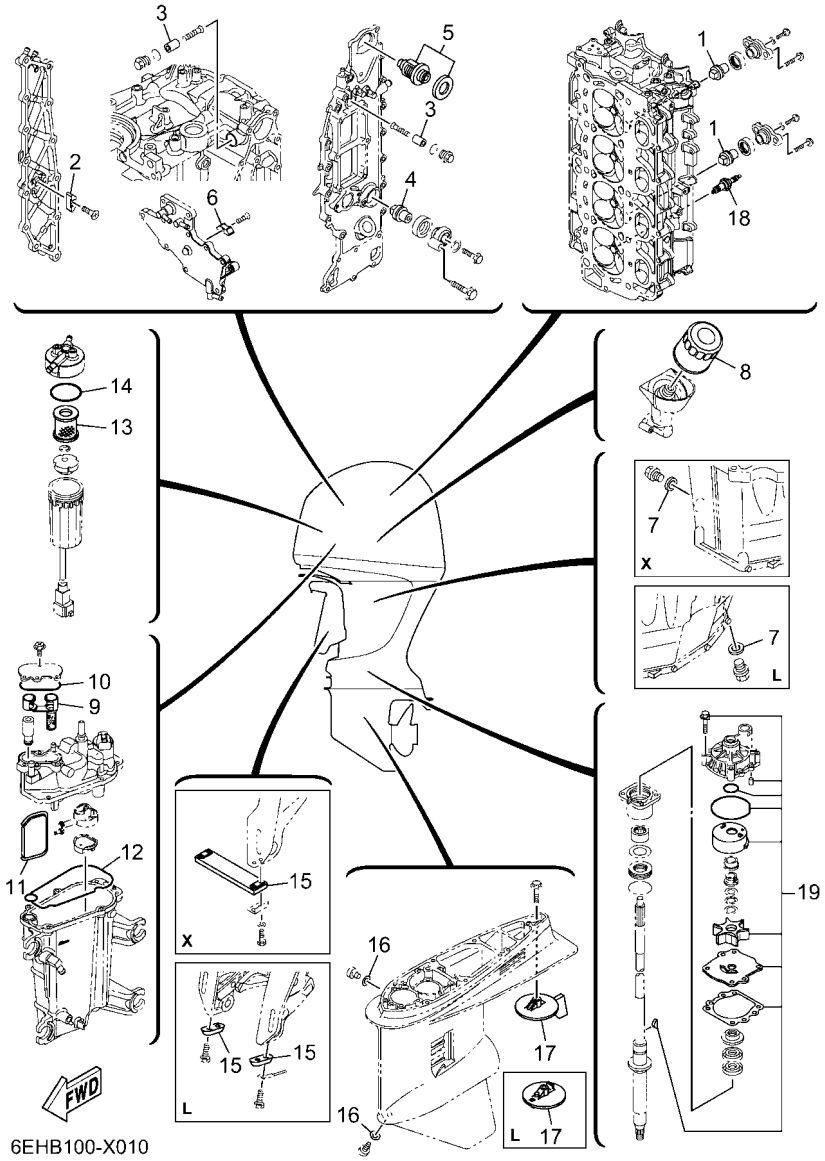

6EHB100-X010

FIG. 1 SCHEDULED SERVICE PARTS — PIECES MAINTENANCE PERIODIQUE

REF. NO.	PART NO. N° PIECES	DESCRIPTION DESCRIPTION	XA	LA				REMARKS REMARQUES
1	6ML–11325–00	ANODE ANODE	2	2				
2	6E5–11325–00	ANODE ANODE	1	1				
3	68T–11325–00	ANODE ANODE	2	2				
4	6ML–11325–00	ANODE ANODE	1	1				
5	6DA–12411–01	THERMOSTAT THERMOSTAT	1	1				
6	6E5–11325–00	ANODE ANODE	1	1				
7	90430–14M09	GASKET JOINT	1	1				
8	69J–13440–04	ELEMENT ASSY, OIL CLEANER ELEMENT, FILTRE A HUILE	1	1				
9	6CB–24501–01	FILTER, FUEL FILTRE	1	1				
10	6CB–13016–00	O-RING JOINT TORIQUE	1	1				
11	6LH–13915–00	FILTER FILTRE	1	1				
12	6CB–14984–00	GASKET, FLOAT CHAMBER JOINT, CUVE DE FLOTTEUR	1	1				
13	6P3–24563–02	ELEMENT, FILTER ELEMENT, FILTRE	1	1				
14	6P3–24564–00	GASKET JOINT	1	1				
15	6AW–45251–00	ANODE ANODE	1					X(25.3") X(25.3")
	65W–45251–00	ANODE ANODE		2				L(20.3") L(20.3")
16	90430–08003	GASKET JOINT	2	2				
17	6J9–45371–01	TAB-TRIM ANODE DERIVE	1					X(25.3") X(25.3")
	6CE–45373–00	ANODE ANODE		1				L(20.3") L(20.3")
18	94702–00400	PLUG, SPARK (NGK LFR6A-11) BOUGIE D'ALLUMAGE(NGK LFR6A-11	4	4				
19	61A–W0078–A4	WATER PUMP REPAIR KIT KIT DE REPARATION DE LA POMPE	1	1				

FIG. 2 TOP COWLING — CAPOT SUPERIEUR

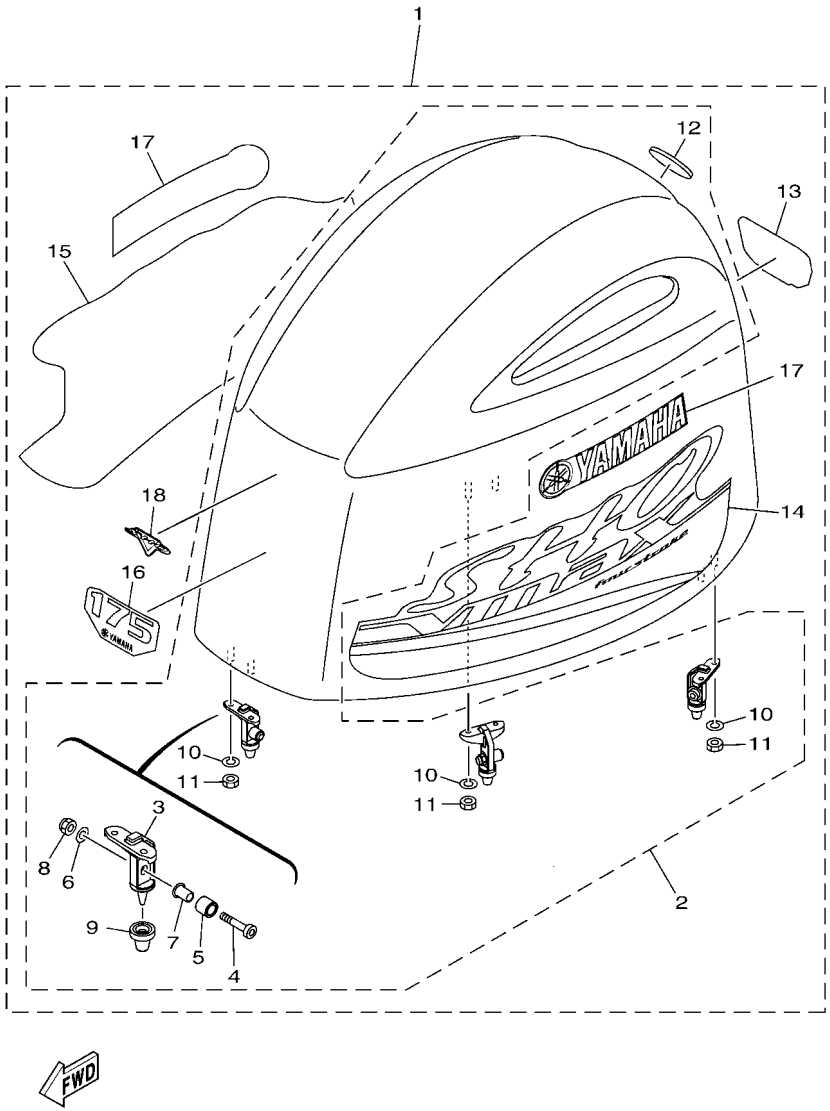

6FH3100-R020

REF. NO.	PART NO. N° PIECES	DESCRIPTION DESCRIPTION	XA	LA				REMARKS REMARQUES
1	6FH–42610–02	TOP COWLING ASSY CAPOT (ENS.)	1	1				
2	6EH–4261A–03	.TOP COWLING W/O GRAPHICS .CAPOT SUPERIEUR SANS GRAPHIQUE	1	1				
3	6CB–42647–A0	..HOLDER, CLAMP BAND ..SUPPORT, SANDOW DE SERRAGE	3	3				
4	90111–08078	..BOLT, HEXAGON SOCKET BUTTON ..BOULON	3	3				
5	90387–10094	..COLLAR ..COLLERETTE	3	3				
6	92990–08600	..WASHER, PLATE ..RONDELLE, PLATE	3	3				
7	90387–08M45	..COLLAR ..COLLERETTE	3	3				
8	95780–08300	..NUT, FLANGE ..ECROU	3	3				
9	6AW–42663–01	..DAMPER 2 ..AMORTISSEUR 2	3	3				
10	92990–06100	..WASHER, SPRING ..RONDELLE, GROWER	6	6				
11	95380–06600	..NUT, HEXAGON ..ECROU	6	6				
12	6DA–42697–00	..TUNING FORK MARK ..MARQUE, YAMAHA	1	1				
13	6FH–42678–00	.GRAPHIC, REAR .ADHESIF, ARRIERE	1	1				
14	6CB–42675–10	.GRAPHIC, SIDE 1 .EMBLEME	1	1				
15	6CB–42676–10	.GRAPHIC, SIDE 2 .EMBLEME	1	1				
16	6FA–42677–00	.GRAPHIC, FRONT .ADHESIF, AVANT	1	1				
17	6D6–42681–00	.MARK, COWLING .ADHESIF, CAPOT	2	2				
18	6EH–42682–00	.MARK, COWLING .ADHESIF, CAPOT	1	1				

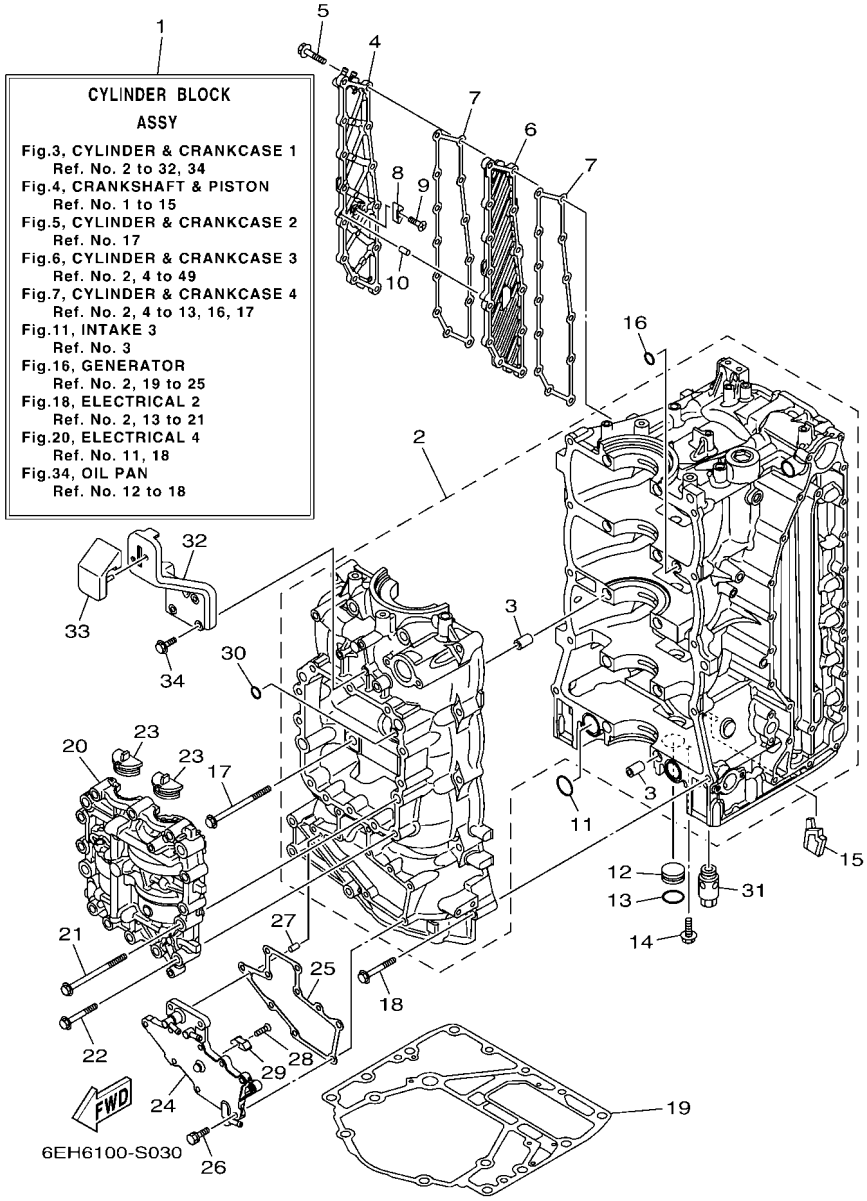

FIG. 3 CYLINDER & CRANKCASE 1 — CYLINDRE & CARTER 1

REF. NO.	PART NO. N° PIECES	DESCRIPTION DESCRIPTION	XA	LA				REMARKS REMARQUES
1	6DA–W009B–14–9S	CYLINDER BLOCK ASSY CYLINDRE GROUPE (ENS.)	1	1				
2	6DA–15109–01–9S	CRANKCASE ASSY CARTER DE MOTEUR COMPLET	1	1				
3	91814–18002	.PIN, DOWEL .GOUJON, D'ASSEMBLAGE	10	10				
4	6DA–15414–00–9S	COVER 1 COUVERCLE 1	1	1				
5	90105–06028	BOLT, FLANGE BOULON, A COLLERETTE	13	13				
6	6DA–15423–00–9S	COVER 2 COUVERCLE 2	1	1				
7	6DA–15353–01	GASKET, DRAIN JOINT, PLOT DE VIDANGE	2	2				
8	6E5–11325–00	ANODE ANODE	1	1				
9	98780–04016	SCREW, FLAT HEAD VIS A TETE FRAISEE	1	1				
10	91690–40010	PIN, SPRING AGRAFFE	1	1				
11	93210–25552	O-RING JOINT TORIQUE	2	2				
12	90338–25004	PLUG PLOT	1	1				
13	93210–25647	O-RING JOINT TORIQUE	1	1				
14	90119–06276	BOLT, WITH WASHER BOULON, AVEC RONDELLE	1	1				
15	6DA–14664–01	GROMMET, WATER SHUT PASSE-FIL	1	1				
16	93210–12648	O-RING JOINT TORIQUE	1	1				
17	90105–10406	BOLT, FLANGE BOULON, A COLLERETTE	10	10				
18	90119–08M66	BOLT, WITH WASHER BOULON, AVEC RONDELLE	10	10				
19	63P–11351–03	GASKET, CYLINDER JOINT, D'EMBASE	1	1				
20	6DA–11500–00	BALANCER ASSY ARBRE D'EQUILIBRAGE COMPLET	1	1				
21	90105–10406	BOLT, FLANGE BOULON, A COLLERETTE	4	4				
22	90105–08175	BOLT, FLANGE BOULON, A COLLERETTE	12	12				
23	63P–11512–00	SEAL, CRANK COVER JOINT, COUV DE VILEBREQUIN	2	2				
24	6DA–15411–00–9S	COVER, CRANKCASE 1 COUVERCLE 1, CARTER MOTEUR	1	1				
25	6DA–15451–01	GASKET, CRANKCASE COVER 1 JOINT, COUVERCLE DE CARTER 1	1	1				
26	90119–06MA3	BOLT, WITH WASHER BOULON, AVEC RONDELLE	10	10				
27	91690–40010	PIN, SPRING AGRAFFE	1	1				

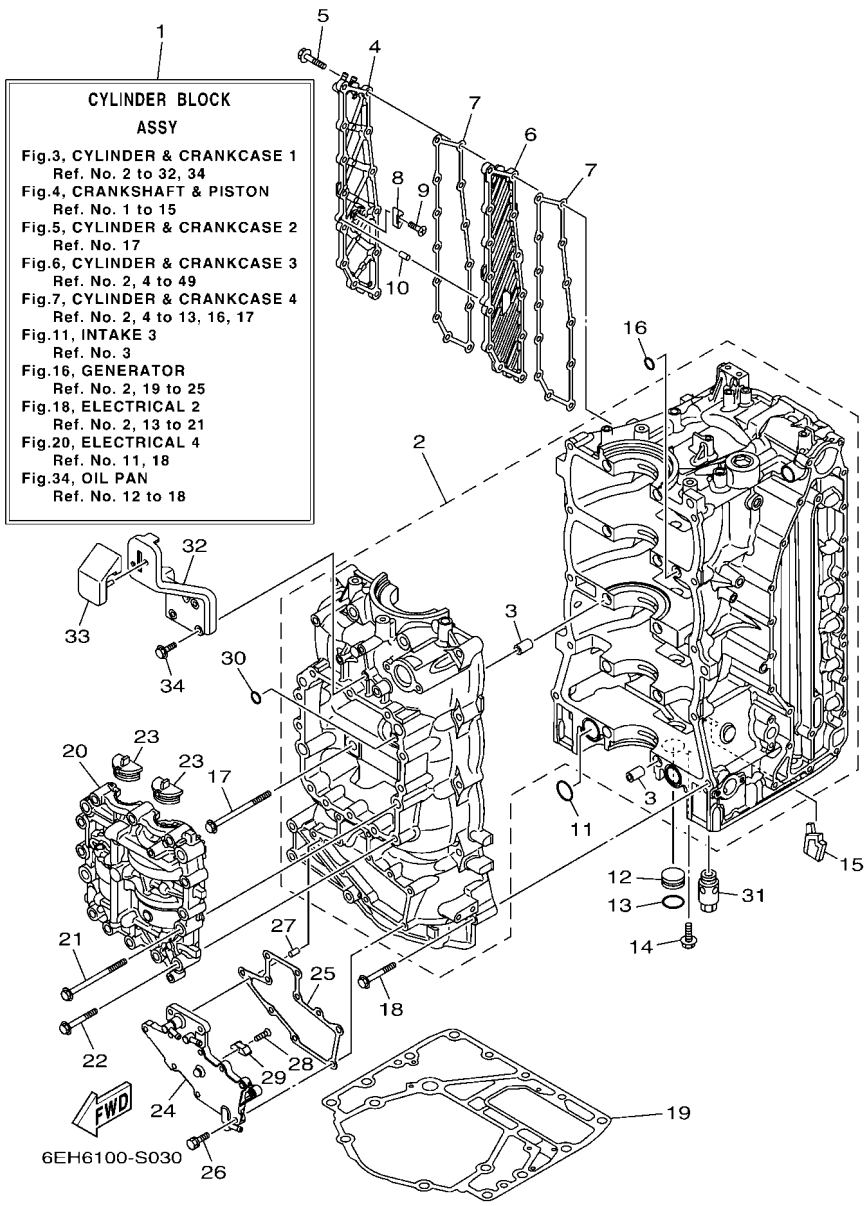

FIG. 3 CYLINDER & CRANKCASE 1 — CYLINDRE & CARTER 1

REF. NO.	PART NO. N° PIECES	DESCRIPTION DESCRIPTION	XA	LA				REMARKS REMARQUES
28	98780–04016	SCREW, FLAT HEAD VIS A TETE FRAISEE	1	1				
29	6E5–11325–00	ANODE ANODE	1	1				
30	93210–08001	O-RING JOINT TORIQUE	1	1				
31	63P–13490–00	RELIEF VALVE ASSY SOUPAPE DE SECURITE COMPLET	1	1				
32	6DA–42744–00	STAY SUPPORT	1	1				
33	6DA–42662–01	DAMPER AMORTISSEUR	1	1				
34	90105–06196	BOLT, FLANGE BOULON, A COLLERETTE	3	3				

FIG. 4 CRANKSHAFT & PISTON — VILEBREQUIN & PISTON

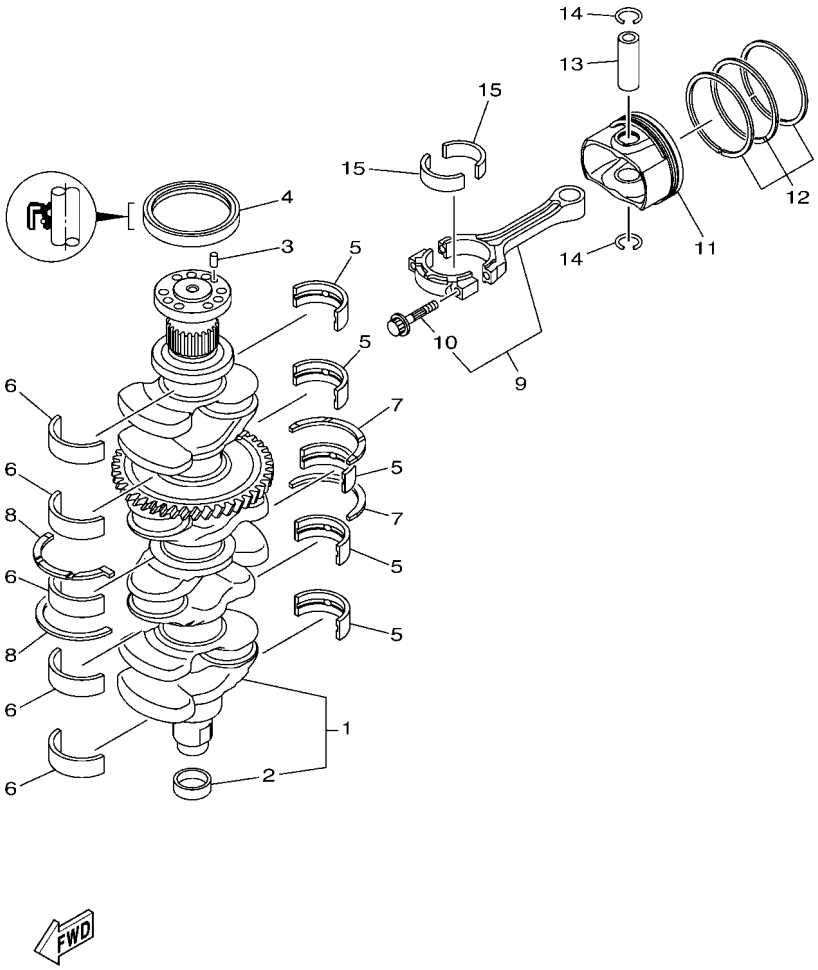

REF. NO.	PART NO. N° PIECES	DESCRIPTION DESCRIPTION	XA	LA				REMARKS REMARQUES
1	6DA–11410–00	CRANKSHAFT VILEBREQUIN COMPLET	1	1				
2	6CB–11478–00	.COLLAR .COLLERETTE	1	1				
3	93606–12019	PIN, DOWEL GOUPILLE	1	1				
4	93102–85008	OIL SEAL JOINT SPY	1	1				
5	6DA–11416–00	PLANE BEARING, CRANKSHAFT 1 COUSSINET DE VILEBREQUIN 1	5	5				UR YELLOW UR YELLOW
	6DA–11416–10	PLANE BEARING, CRANKSHAFT 1 COUSSINET DE VILEBREQUIN 1	5	5				UR GREEN UR GREEN
	6DA–11416–20	PLANE BEARING, CRANKSHAFT 1 COUSSINET DE VILEBREQUIN 1	5	5				UR BLUE UR BLUE
6	6DA–11417–00	PLANE BEARING, CRANKSHAFT 2 COUSSINET DE VILEBREQUIN 2	5	5				UR YELLOW UR YELLOW
	6DA–11417–10	PLANE BEARING, CRANKSHAFT 2 COUSSINET DE VILEBREQUIN 2	5	5				UR GREEN UR GREEN
	6DA–11417–20	PLANE BEARING, CRANKSHAFT 2 COUSSINET DE VILEBREQUIN 2	5	5				UR BLUE UR BLUE
7	6DA–11426–00	BEARING, THRUST 1 ROULEMENT DE BUTEE 1	2	2				
8	6DA–11427–00	BEARING, THRUST 2 ROULEMENT DE BUTEE 2	2	2				
9	6CB–W1165–10	CONNECTING ROD ASSY BIELLE COMPLETTE	4	4				
10	63P–11654–10	.BOLT, CONNECTING ROD .BOULON, BIELLE	2	2				
11	6DA–11631–21–94	PISTON (STD) PISTON (STD)	4	4				
12	6CB–11603–00	PISTON RING SET (STD) JEU DE SEGMENTS (STD)	4	4				
13	6CB–11633–00	PIN, PISTON AXE, PISTON	4	4				
14	K0F–A3233–00	RING,HOLE SNAP JONC	8	8				
15	6JD–11656–00	PLANE BEARING, CONNECTING ROD ROULEMENT DE BIELLE	8	8				UR BLACK UR BLACK
	6JD–11656–10	PLANE BEARING, CONNECTING ROD ROULEMENT DE BIELLE	8	8				UR PINK UR PINK
	6JD–11656–20	PLANE BEARING, CONNECTING ROD ROULEMENT DE BIELLE	8	8				UR RED UR RED

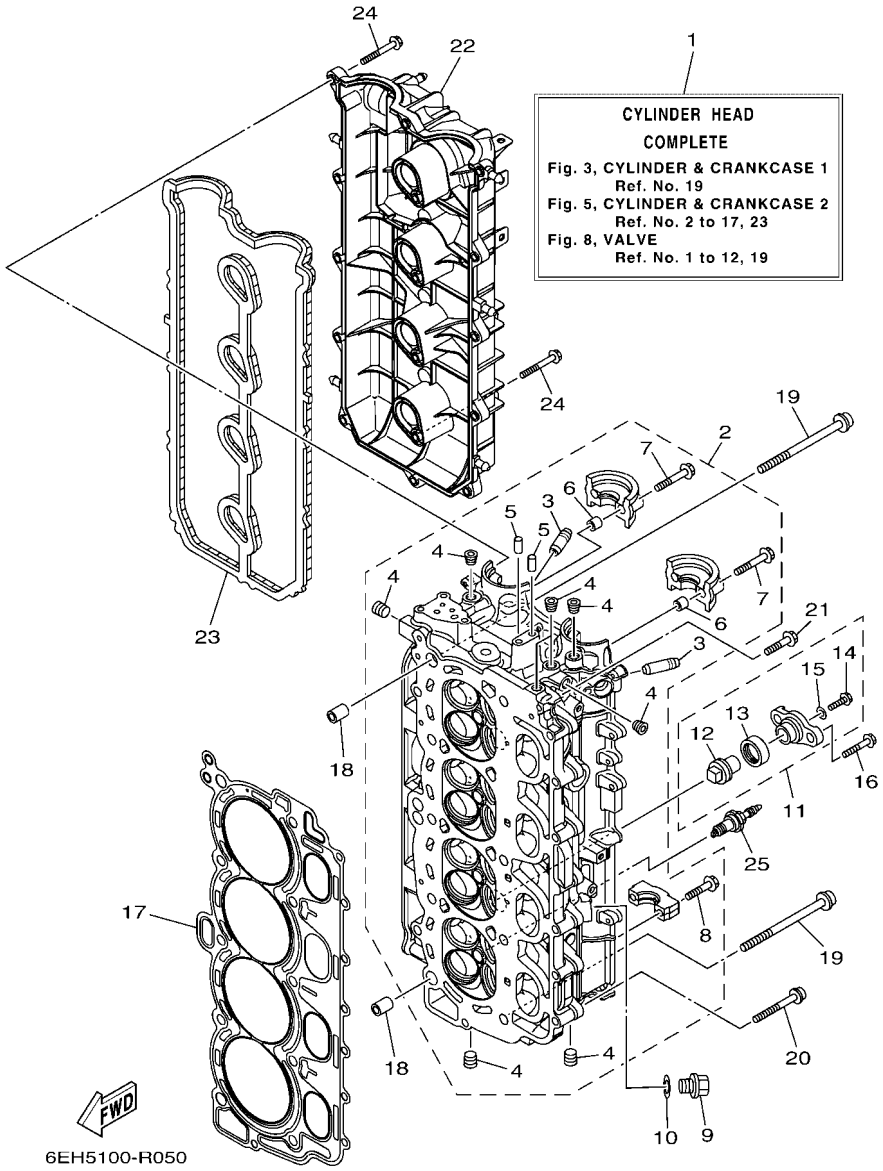

FIG. 5 CYLINDER & CRANKCASE 2 — CYLINDRE & CARTER 2

REF. NO.	PART NO. N° PIECES	DESCRIPTION DESCRIPTION	XA	LA				REMARKS REMARQUES
1	6DA–W009A–04–9S	CYLINDER HEAD COMPLETE CULASSE (ENS.)	1	1				
2	6DA–11110–02–9S	CYLINDER HEAD ASSY JEU DE CULASSE	1	1				
3	6DA–11133–10	.GUIDE, VALVE 1 .GUIDE, SOUPAPE 1	16	16				
4	90344–51019	.PLUG, TAPER SCREW .PLOT, FILETE CONIQUE	8	8				
5	93606–12019	.PIN, DOWEL .GOUPILLE	2	2				
6	91809–08006	.PIN, DOWEL .GOUJON, D'ASSEMBLAGE	4	4				
7	90119–07001	.BOLT, WITH WASHER .BOULON, AVEC RONDELLE	4	4				
8	90119–07234	.BOLT, WITH WASHER .BOULON, AVEC RONDELLE	16	16				
9	90340–14M06	PLUG, STRAIGHT SCREW PLOT, FILETE DROIT	1	1				
10	90430–14115	GASKET JOINT	1	1				
11	6ML–11301–00	ANODE COVER ASSY COUVERCLE ANODE (ENS.)	2	2				
12	6ML–11325–00	.ANODE .ANODE	1	1				
13	67F–11328–01	.GROMMET, ANODE .PASSE-FIL	1	1				
14	90105–06M07	.BOLT, FLANGE .BOULON, A COLLERETTE	1	1				
15	90430–06M03	.GASKET .JOINT	1	1				
16	95D95–08025	BOLT, FLANGE DEEP RECESS BOULON FIXATION	4	4				
17	6DA–11181–00	GASKET, CYLINDER HEAD 1 JOINT, DE CULASSE 1	1	1				
18	90387–11005	COLLAR COLLERETTE	2	2				
19	90149–11001	SCREW VIS	10	10				
20	90105–08175	BOLT, FLANGE BOULON, A COLLERETTE	8	8				
21	90105–06151	BOLT, FLANGE BOULON, A COLLERETTE	1	1				
22	6DA–11191–00	COVER, CYLINDER HEAD 1 COUVERCLE, CULASSE 1	1	1				
23	6DA–11193–00	GASKET, HEAD COVER 1 JOINT, COUVERCLE DE CULASSE 1	1	1				
24	95D95–06030	BOLT, FLANGE DEEP RECESS BOULON FIXATION	16	16				
25	94702–00400	PLUG, SPARK (NGK LFR6A-11) BOUGIE D'ALLUMAGE(NGK LFR6A-11	4	4				

FIG. 6 CYLINDER & CRANKCASE 3 — CYLINDRE & CARTER 3

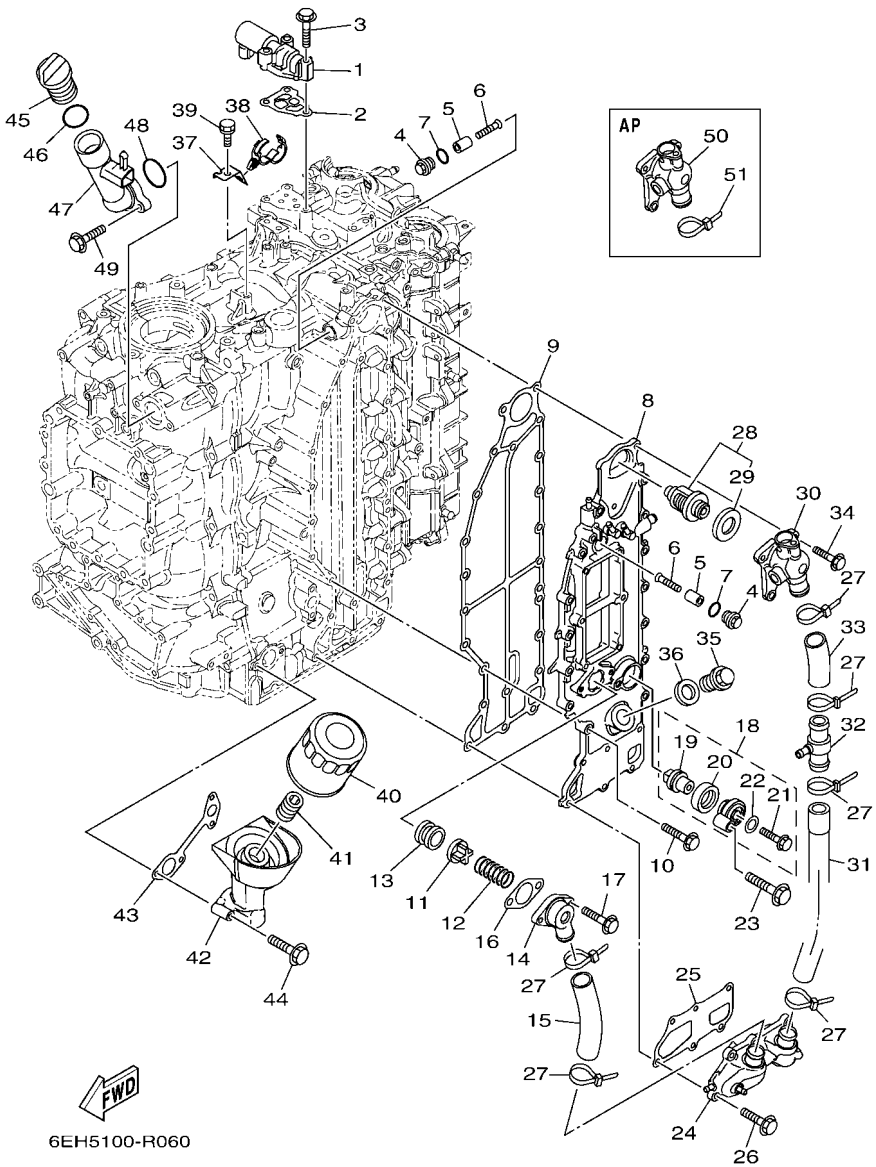

REF. NO.	PART NO. N° PIECES	DESCRIPTION DESCRIPTION	XA	LA				REMARKS REMARQUES
1	6CB–86120–00	SOLENOID VALVE ASSY SOLENOIDE	1	1				
2	6CB–1242F–00	GASKET, FILTER JOINT, FILTRE	1	1				
3	90105–06035	BOLT, FLANGE BOULON, A COLLERETTE	3	3				
4	6G8–11197–A0	PLUG, BLIND PLOT, BORGNE	2	2				
5	68T–11325–00	ANODE ANODE	2	2				
6	90151–05M05	SCREW, COUNTERSUNK VIS, TETE NOYEE	2	2				
7	93210–13M63	O-RING JOINT TORIQUE	2	2				
8	6DA–41113–00–9S	OUTER COVER, EXHAUST COUVERCLE, ECHAPPEMENT	1	1				
9	6DA–41114–01	GASKET, EXHAUST OUTER COVER JOINT, COUVERCLE D'ECHAPPEMENT	1	1				
10	90105–06028	BOLT, FLANGE BOULON, A COLLERETTE	14	14				
11	60H–12416–00	VALVE, PRESSURE CONTROL SOUPAPE DE CONTROLEUR PRESS	1	1				
12	90501–16M11	SPRING, COMPRESSION RESSORT, COMPRESSION	1	1				
13	90480–20M05	GROMMET PASSE-FIL	1	1				
14	6G5–11372–00	COVER, BYPASS 2 CONVERCLE	1	1				
15	6DA–1243A–00	HOSE 1 DURITE 1	1	1				
16	60V–11382–A0	GASKET 2 JOINT 2	1	1				
17	90119–06MA3	BOLT, WITH WASHER BOULON, AVEC RONDELLE	2	2				
18	69J–11301–02	ANODE COVER ASSY COUVERCLE ANODE (ENS.)	1	1				
19	6ML–11325–00	.ANODE .ANODE	1	1				
20	67F–11328–01	.GROMMET, ANODE .PASSE-FIL	1	1				
21	90105–06M07	.BOLT, FLANGE .BOULON, A COLLERETTE	1	1				
22	90430–06M03	.GASKET .JOINT	1	1				
23	97E75–08540	BOLT, HEXAGON W/W DEEP RECESS VIS HEXAGONAL AVC RONDELLE	1	1				
24	6DA–12527–00–9S	COVER, WATER BY-PASS CACHE, DERIVATHION D'EAU	1	1				
25	6DA–11381–01	GASKET 1 JOINT 1	1	1				
26	90105–06028	BOLT, FLANGE BOULON, A COLLERETTE	6	6				
27	90465–11M59	CLAMP BRIDE	6	6				

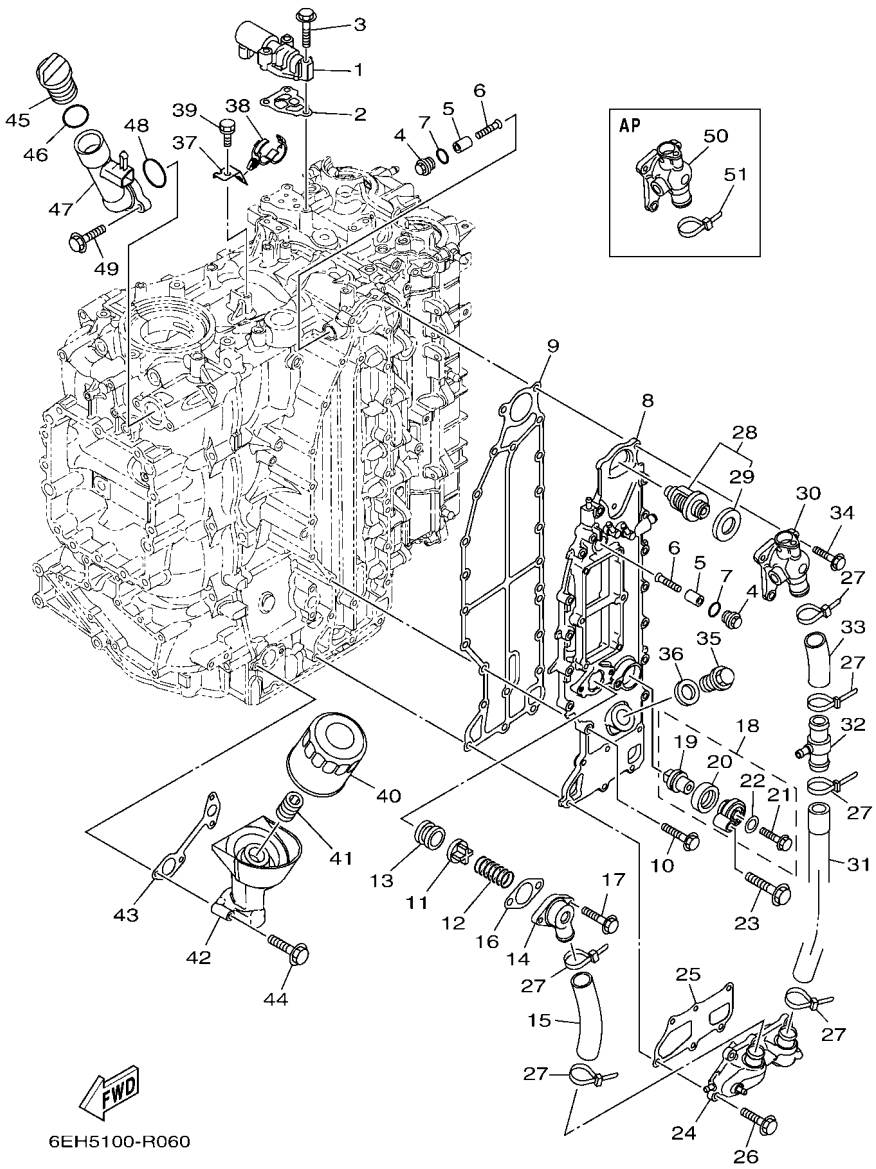

FIG. 6 CYLINDER & CRANKCASE 3 — CYLINDRE & CARTER 3

REF. NO.	PART NO. N° PIECES	DESCRIPTION DESCRIPTION	XA	LA				REMARKS REMARQUES
28	6DA–12411–01	THERMOSTAT THERMOSTAT	1	1				
29	6AW–12412–00	.SEAL, THERMOSTAT .JOINT, THERMOSTAT	1	1				
30	6DA–12413–A0–9S	COVER, THERMOSTAT COUVERCLE, THERMOSTAT	1	1				
31	6DA–1243E–00	HOSE 2 DURITE 2	1	1				
32	6CE–24378–00	PIPE, JOINT 3 DURITE RACCORDEMENT 3	1	1				
33	6DA–1244H–00	HOSE 5 DURITE 5	1	1				
34	90105–06028	BOLT, FLANGE BOULON, A COLLERETTE	3	3				
35	90340–18M09	PLUG, STRAIGHT SCREW PLOT, FILETE DROIT	1	1				
36	90201–186F1	WASHER, PLATE RONDELLE, PLATE	1	1				
37	6DA–12491–00	CLAMP 1 COLLIER 1	1	1				
38	90464–20181	CLAMP BRIDE	1	1				
39	90119–06078	BOLT, WITH WASHER BOULON, AVEC RONDELLE	1	1				
40	69J–13440–04	ELEMENT ASSY, OIL CLEANER ELEMENT, FILTRE A HUILE	1	1				
41	6S5–12858–00	BOLT, UNION BOULON, RACCORD	1	1				
42	6DA–13446–01	CONNECTOR CONNECTEUR	1	1				
43	6DA–13475–00	GASKET JOINT	1	1				
44	90105–06151	BOLT, FLANGE BOULON, A COLLERETTE	4	4				
45	6G8–15363–00	PLUG, OIL PLOT, HUILE	1	1				
46	93210–24M79	O-RING JOINT TORIQUE	1	1				
47	6DA–15319–00	JOINT JOINT	1	1				
48	93210–357A3	O-RING JOINT TORIQUE	1	1				
49	90105–06037	BOLT, FLANGE BOULON, A COLLERETTE	2	2				
50	6DA–1241B–A0–9S	COVER, THERMOSTAT 2 COUVERCLE, THERMOSTAT 2	1	1				AP WATER TEMP SENSOR AP WATER TEMP SENSOR
51	90465–11M59	CLAMP BRIDE	1	1				AP WATER TEMP SENSOR AP WATER TEMP SENSOR

FIG. 7 CYLINDER & CRANKCASE 4 — CYLINDRE & CARTER 4

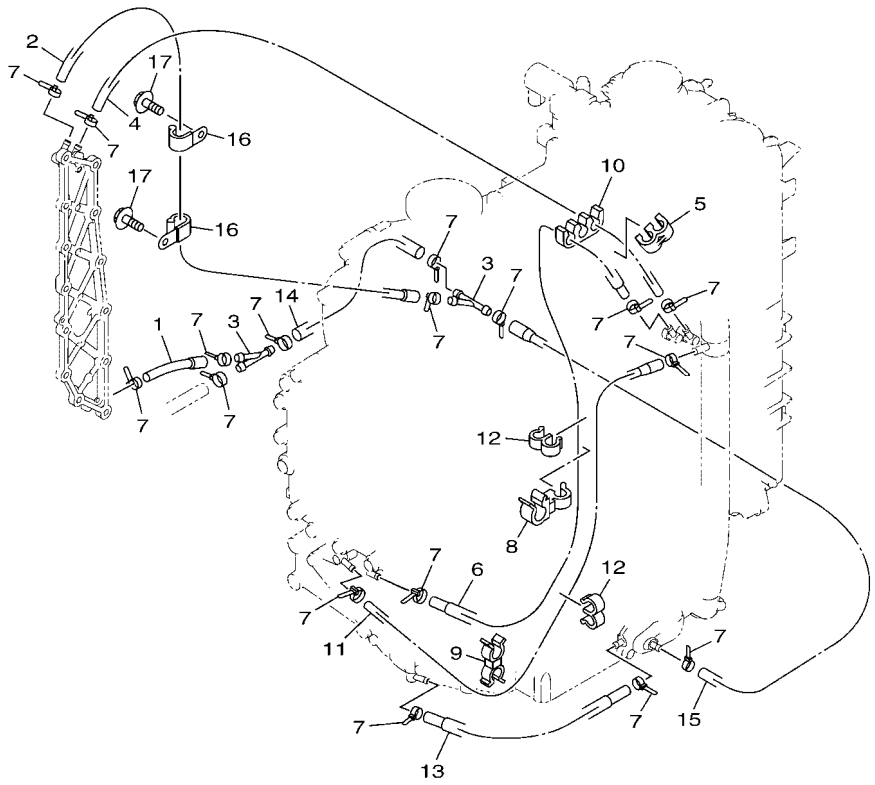

6EH5100-R070

REF. NO.	PART NO. N° PIECES	DESCRIPTION DESCRIPTION	XA	LA				REMARKS REMARQUES
1	6DA–12576–00	HOSE 1 TUYAU 1	1	1				
2	6DA–12589–00	HOSE 6 TUYAU 6	1	1				
3	6CE–24377–00	PIPE, JOINT 2 DURITE RACCORDEMENT 2	2	2				
4	90445–09008	HOSE (L470) DURITE (L470)	1	1				
5	90464–09M21	CLAMP BRIDE	1	1				
6	6DA–12578–00	HOSE 3 TUYAU 3	1	1				
7	90465–11M10	CLAMP BRIDE	17	17				
8	90464–12010	CLAMP BRIDE	1	1				
9	90464–09142	CLAMP BRIDE	1	1				
10	90464–09020	CLAMP BRIDE	1	1				
11	6DA–12579–00	HOSE 4 TUYAU 4	1	1				
12	90464–09M31	CLAMP BRIDE	2	2				
13	6DA–12552–00	HOSE 8 DURITE 8	1	1				
14	90445–10057	HOSE (L170) DURITE (L170)	1	1				
15	6DA–12589–00	HOSE 6 TUYAU 6	1	1				
16	90465–08M83	CLAMP BRIDE	2	2				
17	95D95–06012	BOLT, FLANGE DEEP RECESS BOULON FIXATION	2	2				

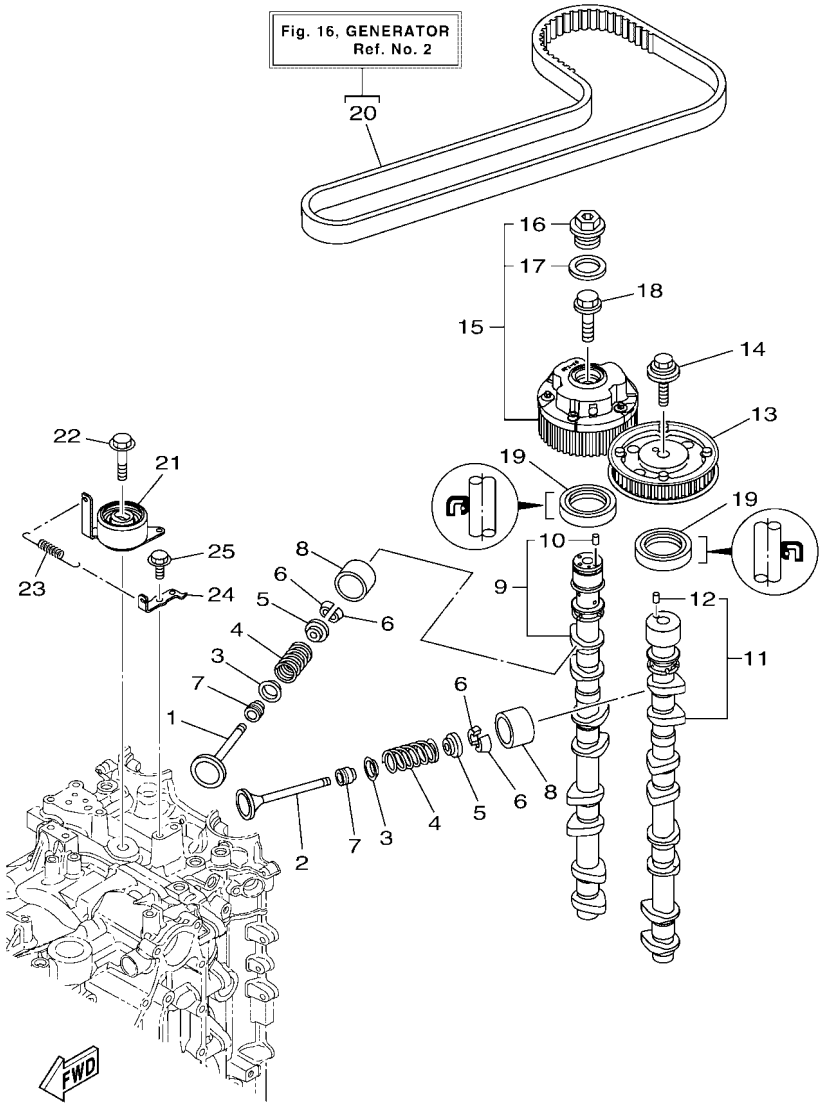

6DA3100-P080

FIG. 8 VALVE — SOUPAPE

REF. NO.	PART NO. N° PIECES	DESCRIPTION DESCRIPTION	XA	LA				REMARKS REMARQUES
1	6CB–12111–00	VALVE, INTAKE SOUPAPE, ADMISSION	8	8				
2	6DA–12121–00	VALVE, EXHAUST SOUPAPE, ECHAPPEMENT	8	8				
3	K0F–A3743–00	SEAT, VALVE SPRING SIEGE, RESSORT DE SOUPAPE	16	16				
4	6CB–12113–00	SPRING, VALVE INNER RESSORT DE SOUPAPE, INTERNE	16	16				
5	K0F–A3741–00	RETAINER, VALVE SPRING BUTEE DE RESSORT DE SOUPAPA	16	16				
6	K0F–A3742–00	LOCK, VALVE SPRING RETAINER FRAISE, SOUPAPE	32	32				
7	51Y–12119–00	SEAL, VALVE STEM JOINT, QUEUE DE SOUPAPE	16	16				
8	K0F–A3751–00	LIFTER, VALVE (3.000) LEVE-SOUPAPE (3.000)	16	16				UR UR
	K0F–A3751–10	LIFTER, VALVE (3.025) LEVE-SOUPAPE (3.025)	16	16				UR UR
	K0F–A3751–20	LIFTER, VALVE (3.050) LEVE-SOUPAPE (3.050)	16	16				UR UR
	K0F–A3751–30	LIFTER, VALVE (3.075) LEVE-SOUPAPE (3.075)	16	16				UR UR
	K0F–A3751–40	LIFTER, VALVE (3.100) LEVE-SOUPAPE (3.100)	16	16				UR UR
	K0F–A3751–50	LIFTER, VALVE (3.122) LEVE-SOUPAPE (3.122)	16	16				UR UR
	K0F–A3751–60	LIFTER, VALVE (3.142) LEVE-SOUPAPE (3.142)	16	16				UR UR
	K0F–A3751–70	LIFTER, VALVE (3.162) LEVE-SOUPAPE (3.162)	16	16				UR UR
	K0F–A3751–80	LIFTER, VALVE (3.182) LEVE-SOUPAPE (3.182)	16	16				UR UR
	K0F–A3751–90	LIFTER, VALVE (3.202) LEVE-SOUPAPE (3.202)	16	16				UR UR
	K0F–A3751–A0	LIFTER, VALVE (3.222) LEVE-SOUPAPE (3.222)	16	16				UR UR
	K0F–A3751–B0	LIFTER, VALVE (3.242) LEVE-SOUPAPE (3.242)	16	16				UR UR
	K0F–A3751–C0	LIFTER, VALVE (3.262) LEVE-SOUPAPE (3.262)	16	16				UR UR
	K0F–A3751–D0	LIFTER, VALVE (3.282) LEVE-SOUPAPE (3.282)	16	16				UR UR
	K0F–A3751–E0	LIFTER, VALVE (3.302) LEVE-SOUPAPE (3.302)	16	16				UR UR
	K0F–A3751–F0	LIFTER, VALVE (3.322) LEVE-SOUPAPE (3.322)	16	16				UR UR
	K0F–A3751–G0	LIFTER, VALVE (3.342) LEVE-SOUPAPE (3.342)	16	16				UR UR
	K0F–A3751–H0	LIFTER, VALVE (3.362) LEVE-SOUPAPE (3.362)	16	16				UR UR
	K0F–A3751–J0	LIFTER, VALVE (3.382) LEVE-SOUPAPE (3.382)	16	16				UR UR
	K0F–A3751–K0	LIFTER, VALVE (3.402) LEVE-SOUPAPE (3.402)	16	16				UR UR

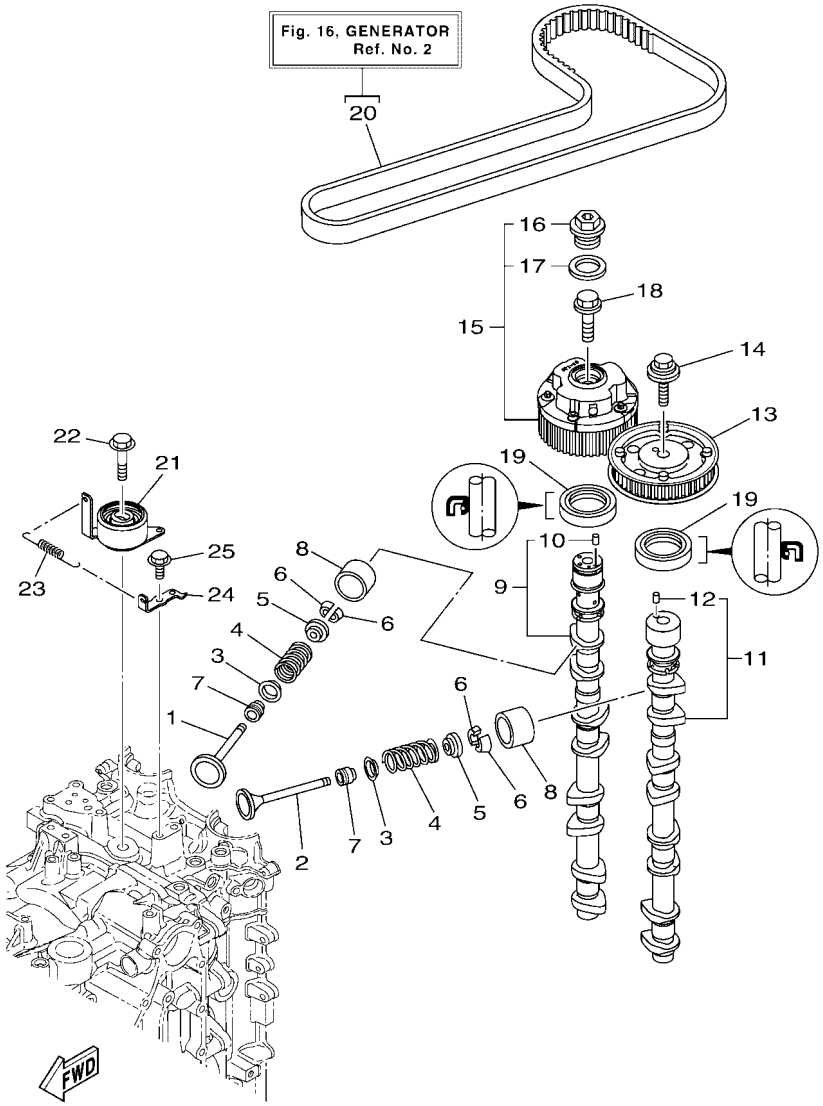

6DA3100-P080

FIG. 8 VALVE — SOUPAPE

REF. NO.	PART NO. N° PIECES	DESCRIPTION DESCRIPTION	XA	LA				REMARKS REMARQUES
8	K0F–A3751–L0	LIFTER, VALVE (3.422) LEVE-SOUPAPE (3.422)	16	16				UR UR
	K0F–A3751–M0	LIFTER, VALVE (3.442) LEVE-SOUPAPE (3.442)	16	16				UR UR
	K0F–A3751–N0	LIFTER, VALVE (3.462) LEVE-SOUPAPE (3.462)	16	16				UR UR
	K0F–A3751–P0	LIFTER, VALVE (3.482) LEVE-SOUPAPE (3.482)	16	16				UR UR
	K0F–A3751–R0	LIFTER, VALVE (3.502) LEVE-SOUPAPE (3.502)	16	16				UR UR
	K0F–A3751–S0	LIFTER, VALVE (3.522) LEVE-SOUPAPE (3.522)	16	16				UR UR
	K0F–A3751–T0	LIFTER, VALVE (3.542) LEVE-SOUPAPE (3.542)	16	16				UR UR
	K0F–A3753–00	LIFTER, VALVE (3.562) LEVE-SOUPAPE (3.562)	16	16				UR UR
	K0F–A3753–10	LIFTER, VALVE (3.582) LEVE-SOUPAPE (3.582)	16	16				UR UR
	K0F–A3753–20	LIFTER, VALVE (3.602) LEVE-SOUPAPE (3.602)	16	16				UR UR
	K0F–A3753–30	LIFTER, VALVE (3.625) LEVE-SOUPAPE (3.625)	16	16				UR UR
	K0F–A3753–40	LIFTER, VALVE (3.650) LEVE-SOUPAPE (3.650)	16	16				UR UR
	K0F–A3753–50	LIFTER, VALVE (3.675) LEVE-SOUPAPE (3.675)	16	16				UR UR
	K0F–A3753–60	LIFTER, VALVE (3.700) LEVE-SOUPAPE (3.700)	16	16				UR UR
	K0F–A3753–70	LIFTER, VALVE (3.725) LEVE-SOUPAPE (3.725)	16	16				UR UR
9	6DA–12171–01	CAMSHAFT 1 ARBRE A CAMES 1	1	1				
10	93605–10108	.PIN, DOWEL .AXE	1	1				
11	6DA–12181–01	CAMSHAFT 2 ARBRE A CAMES 2	1	1				
12	93605–10108	.PIN, DOWEL .AXE	1	1				
13	6FA–115A0–00	DRIVEN GEAR ASSY CLOCHE D'EMBRAYAGE	1	1				
14	90119–10050	BOLT, WITH WASHER BOULON, AVEC RONDELLE	1	1				
15	6P2–12645–22	PULLEY ASSY 1 POULIE COMPLET 1	1	1				
16	6P2–12623–00	.BOLT .BOULON	1	1				
17	6P2–12663–00	.GASKET .JOINT	1	1				
18	6P2–12615–00	BOLT BOULON	1	1				
19	93102–38008	OIL SEAL JOINT SPY	2	2				
20	6DA–W4624–00	BELT (WITH ROTOR BOLTS) COURROIE (AVEC BOULON)	1	1				

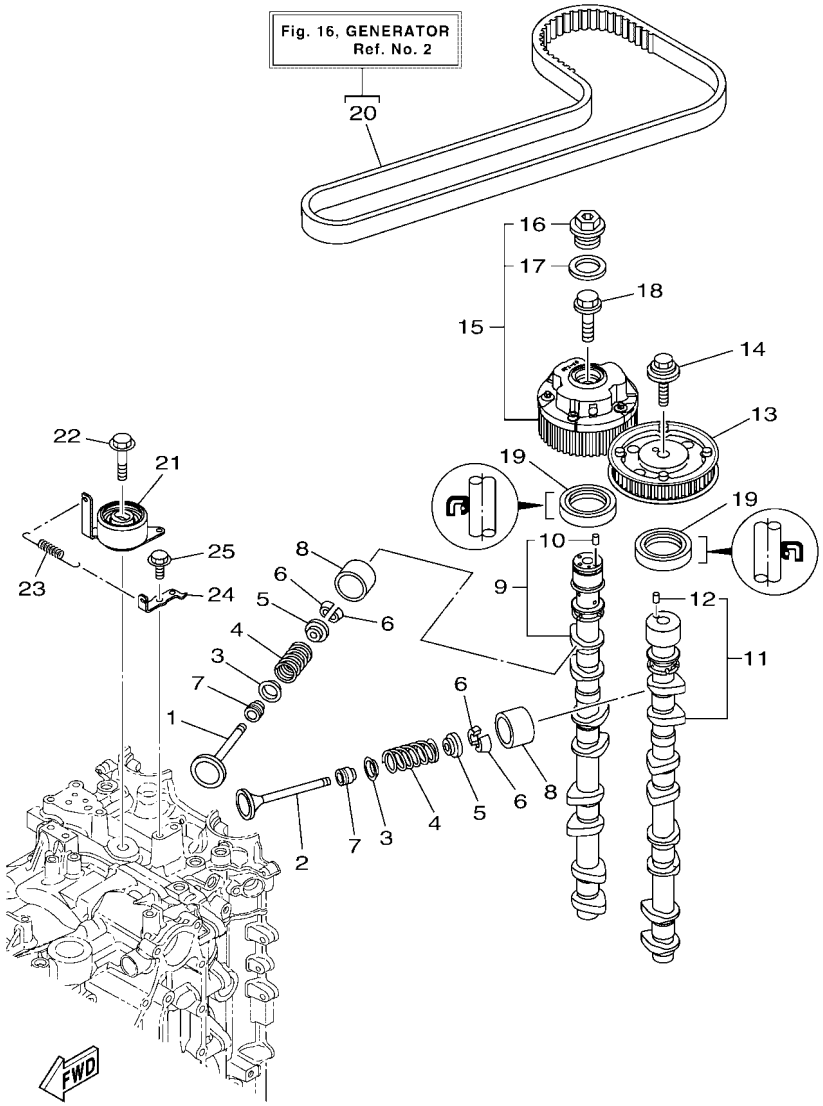

6DA3100-P080

FIG. 8 VALVE — SOUPAPE

REF. NO.	PART NO. N° PIECES	DESCRIPTION DESCRIPTION	XA	LA				REMARKS REMARQUES
21	6DA–11590–00	TENSIONER ASSY TENDEUR (ENS.)	1	1				
22	90119–10M07	BOLT, WITH WASHER BOULON, AVEC RONDELLE	1	1				
23	90506–18025	SPRING, TENSION RESSORT, TENSION	1	1				
24	6DA–11595–00	PLATE,VALVE PLAQUE DE SOUPAPE	1	1				
25	97E75–06516	BOLT, HEXAGON W/W DEEP RECESS VIS HEXAGONAL AVC RONDELLE	1	1				

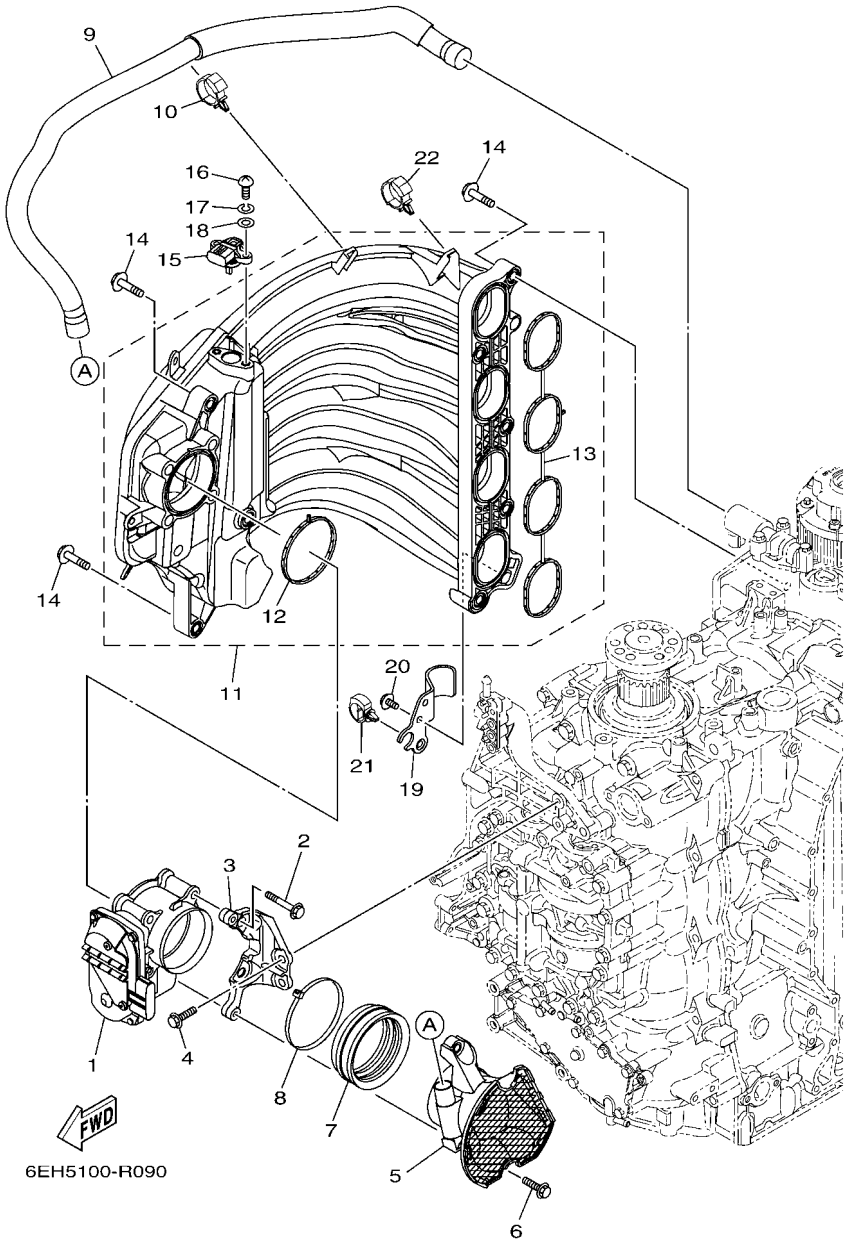

FIG. 9 INTAKE 1 — ADMISSION 1

REF. NO.	PART NO. N° PIECES	DESCRIPTION DESCRIPTION	XA	LA				REMARKS REMARQUES
1	6DA–13751–01	BODY, THROTTLE 1 CARTER 1	1	1				
2	97E75–08560	BOLT, HEXAGON W/W DEEP RECESS VIS HEXAGONAL AVC RONDELLE	4	4				
3	6DA–13152–00	STAY 2 SUPPORT2	1	1				
4	95D75–06025	BOLT, FLANGE DEEP RECESS BOULON FIXATION	2	2				
5	6DA–14440–00	SILENCER ASSY, INTAKE SIENCIEUX D'ADMISSION	1	1				
6	95D75–06025	BOLT, FLANGE DEEP RECESS BOULON FIXATION	2	2				
7	6P2–1441J–01	PIPE, SILENCER DURITE, DE SILENCIEUX	1	1				
8	90464–99004	CLAMP BRIDE	1	1				
9	6DA–15373–00	PIPE, BREATHER DURITE DE RENIFLARD	1	1				
10	90464–12183	CLAMP BRIDE	1	1				
11	6DA–13641–00	MANIFOLD, INTAKE 1 TUBULURE, ADMISSION 1	1	1				
12	6DA–13646–00	.GASKET, MANIFOLD 2 .JOINT, TUBULURE 2	1	1				
13	6DA–13645–00	.GASKET, MANIFOLD 1 .JOINT, TUBULURE 1	1	1				
14	90119–08020	BOLT, WITH WASHER BOULON, AVEC RONDELLE	9	9				
15	68F–83688–10	SENSOR ASSY SONDE (ENS.)	1	1				
16	97885–05016	SCREW, PAN HEAD VIS, A ENCOCHE	2	2				
17	92995–05100	WASHER RONDELLE	2	2				
18	92995–05600	WASHER RONDELLE	2	2				
19	6DA–13881–00	COVER 1 COUVERCLE 1	1	1				
20	95D95–06012	BOLT, FLANGE DEEP RECESS BOULON FIXATION	2	2				
21	90464–20181	CLAMP BRIDE	1	1				
22	90464–12183	CLAMP BRIDE	1	1				

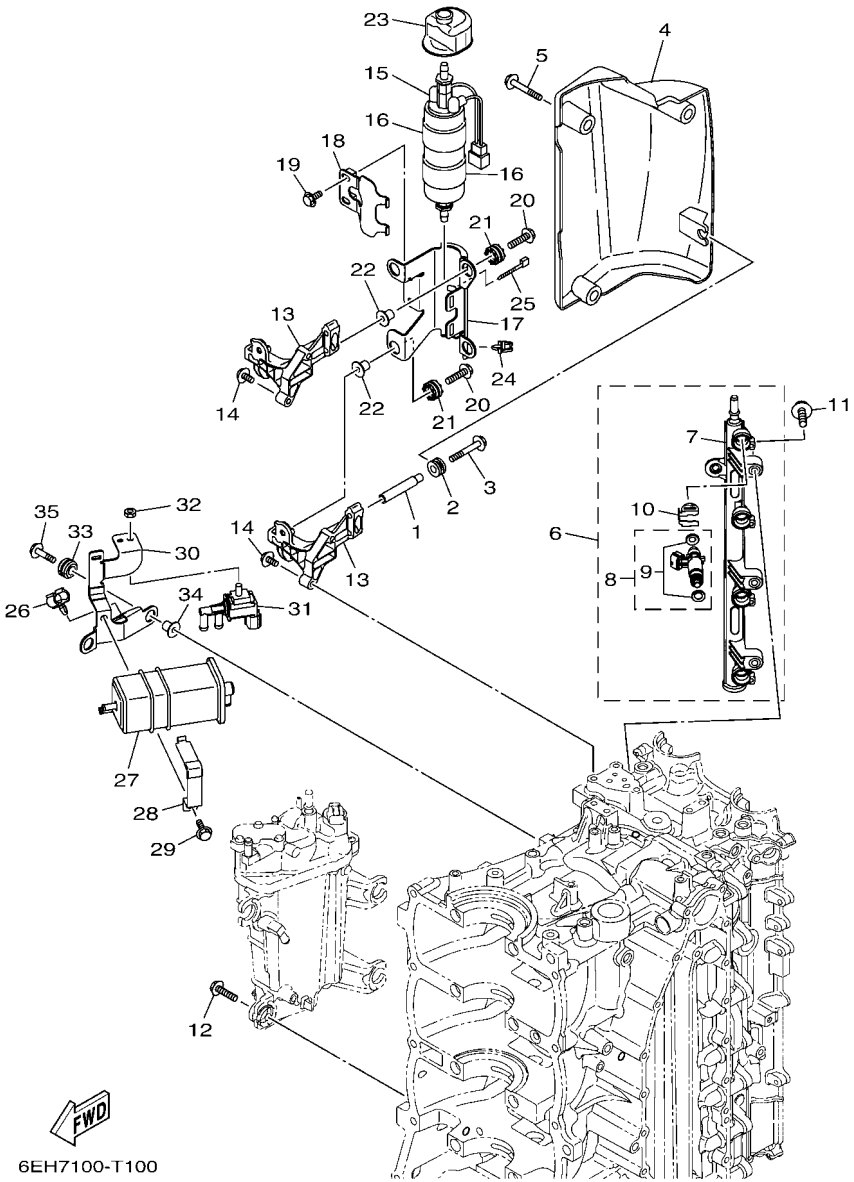

FIG. 10 INTAKE 2 — ADMISSION 2

REF. NO.	PART NO. N° PIECES	DESCRIPTION DESCRIPTION	XA	LA				REMARKS REMARQUES
1	90387–06283	COLLAR COLLERETTE	1	1				
2	90480–12314	GROMMET PASSE-FIL	1	1				
3	90105–06054	BOLT, FLANGE BOULON, A COLLERETTE	1	1				
4	6DA–13564–01	COVER, MANIFOLD COUVERCLE, TUBULURE	1	1				
5	95D95–06020	BOLT, FLANGE DEEP RECESS BOULON FIXATION	3	3				
6	6DA–13160–02	DELIVERY PIPE ASSY 1 ENS. TUBE DE REFOULEMENT 1	1	1				
7	6DA–13161–02	.PIPE, DELIVERY 1 .DURITE REFOULEMENT 1	1	1				
8	6DA–13761–01	.INJECTOR .INJECTEUR	4	4				
9	6AW–1410B–00	..PACKING KIT ..POCHETTE DE JOINTS	1	1				
10	6AW–13577–10	.CLIP .AGRAFE	4	4				
11	90105–06M08	BOLT, FLANGE BOULON, A COLLERETTE	3	3				
12	90119–06299	BOLT, WITH WASHER BOULON, AVEC RONDELLE	4	4				
13	6DA–24425–00	BRACKET, FUEL PUMP 1 SUPPORT, POMPE A ESSENCE 1	2	2				
14	90105–06M08	BOLT, FLANGE BOULON, A COLLERETTE	4	4				
15	6GR–24410–02	FUEL PUMP ASSY POMPE A ESSENCE	1	1				
16	6DA–24492–01	BUSH, FUEL PUMP BAGUE	2	2				
17	6DA–24491–00	BRACKET, FUEL PUMP SUPPORT, POMPE A ESSENCE	1	1				
18	6DA–24426–00	BRACKET, FUEL PUMP 2 SUPPORT, POMPE A ESSENCE 2	1	1				
19	95D95–06012	BOLT, FLANGE DEEP RECESS BOULON FIXATION	2	2				
20	90119–06309	BOLT, WITH WASHER BOULON, AVEC RONDELLE	4	4				
21	60V–85516–00	SPACER ENTRETOISE	4	4				
22	90387–06289	COLLAR COLLERETTE	4	4				
23	6DA–24462–00	CAP, BLIND COUVERCLE, BORGNE	1	1				
24	90464–11121	CLAMP BRIDE	1	1				
25	90465–11M10	CLAMP BRIDE	1	1				
26	90464–09130	CLAMP BRIDE	1	1				
27	6P2–24170–00	CANISTER ASSY BANDE, RASERVOIR A ESSENCE	1	1				

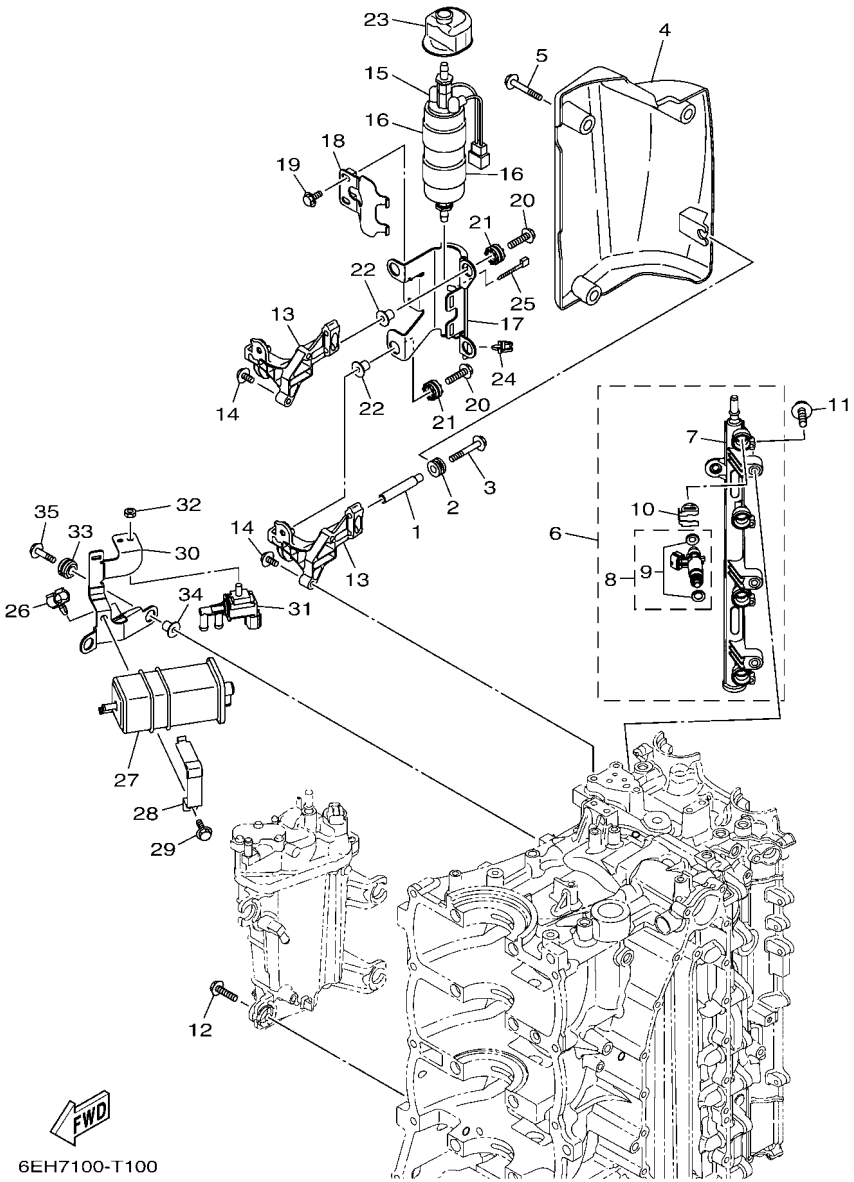

FIG. 10 INTAKE 2 — ADMISSION 2

REF. NO.	PART NO. N° PIECES	DESCRIPTION DESCRIPTION	XA	LA				REMARKS REMARQUES
28	63P–2419A–01	HOLDER SUPPORT	1	1				
29	95D95–06016	BOLT, FLANGE DEEP RECESS BOULON FIXATION	1	1				
30	6DA–2134X–00	BRACKET, CANISTER SUPPORT	1	1				
31	6C5–86120–00	SOLENOID VALVE ASSY SOLENOIDE	1	1				
32	95380–06600	NUT, HEXAGON ECROU	1	1				
33	90480–14031	GROMMET PASSE-FIL	2	2				
34	90387–06289	COLLAR COLLERETTE	2	2				
35	90119–06309	BOLT, WITH WASHER BOULON, AVEC RONDELLE	2	2				

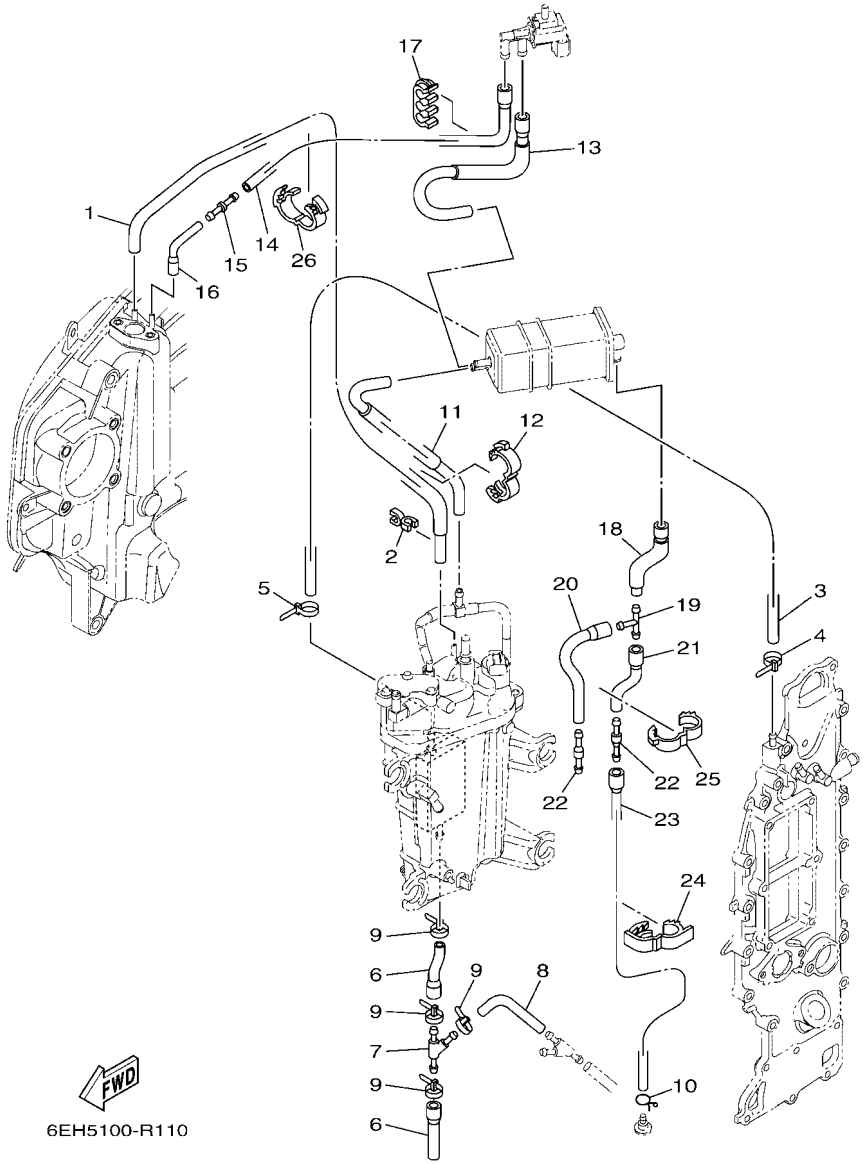

FIG. 11 INTAKE 3 — ADMISSION 3

REF. NO.	PART NO. N° PIECES	DESCRIPTION DESCRIPTION	XA	LA				REMARKS REMARQUES
1	6DA–13532–00	HOSE, VACUUM SENSING 3 DURITE 3	1	1				
2	90464–07M41	CLAMP BRIDE	1	1				
3	90445–09120	HOSE (L600) DURITE (L600)	1	1				
4	90465–11M10	CLAMP BRIDE	1	1				
5	90465–11M10	CLAMP BRIDE	1	1				
6	6DA–12576–00	HOSE 1 TUYAU 1	2	2				
7	6CE–24377–00	PIPE, JOINT 2 DURITE RACCORDEMENT 2	1	1				
8	90445–10056	HOSE (L85) DURITE (L85)	1	1				
9	90465–11M10	CLAMP BRIDE	4	4				
10	90467–09M09	CLIP JONC	1	1				
11	6DA–1475A–00	PIPE 1 DURITE 1	1	1				
12	90464–16001	CLAMP BRIDE	1	1				
13	6DA–1475F–00	PIPE 3 DURITE 3	1	1				
14	6DA–2416A–00	HOSE DURITE	1	1				
15	6CB–14989–00	ORIFICE, AIR VENT OR1F1CE	1	1				
16	6DA–1475G–00	PIPE 4 DURITE 4	1	1				
17	90464–10011	CLAMP BRIDE	1	1				
18	6DA–13545–00	HOSE 1 DURITE 1	1	1				
19	688–24378–00	PIPE, JOINT 3 DURITE RACCORDEMENT 3	1	1				
20	68V–13546–10	HOSE 2 DURITE 2	1	1				
21	6DA–13548–00	HOSE, AIR 4 DURITE, A AIR 4	1	1				
22	6E5–21744–00	BREATHER RENIFLARD	2	2				
23	6DA–13547–00	HOSE 3 DURITE 3	1	1				
24	90464–18004	CLAMP BRIDE	1	1				
25	90464–16001	CLAMP BRIDE	1	1				
26	90464–16001	CLAMP BRIDE	1	1				

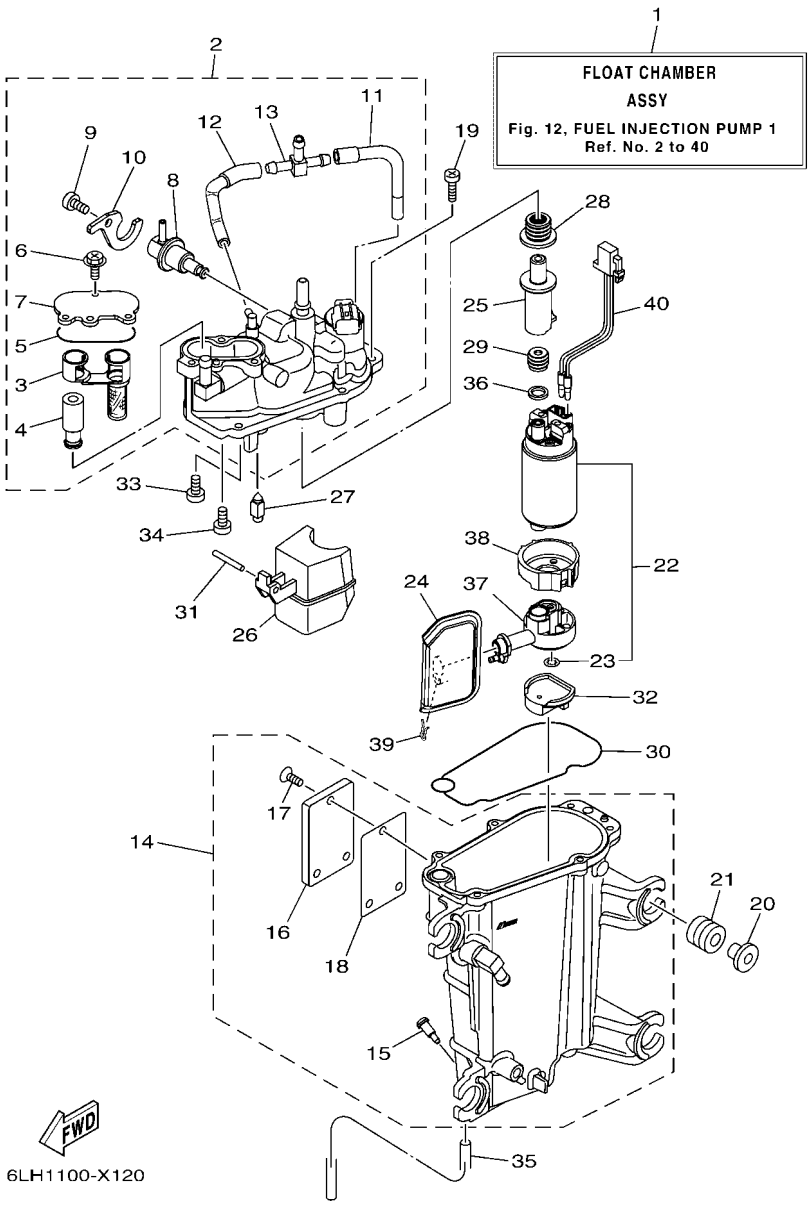

FIG. 12 FUEL INJECTION PUMP 1 — POMPE A INJECTEUR 1

REF. NO.	PART NO. N° PIECES	DESCRIPTION DESCRIPTION	XA	LA				REMARKS REMARQUES
1	6LH–14180–00	FLOAT CHAMBER ASSY CUVE DE FLOTTEUR	1	1				
2	6DA–14182–00	COVER, FLOAT CHAMBER COUVERCLE, CUVE DE FLOTTEUR	1	1				
3	6CB–24501–01	.FILTER, FUEL .FILTRE	1	1				
4	6CB–24460–00	.RELIEF VALVE ASSY .SOUPAPE DE SECURITE COMPLET	1	1				
5	6CB–13016–00	.O-RING .JOINT TORIQUE	1	1				
6	6CB–14216–00	.SCREW .VIS	3	3				
7	6CB–24217–00	.COVER .COUVERCLE	1	1				
8	6CB–13906–01	.REGULATOR, PRESSURE .REGULATEUR DE PRESSION	1	1				
9	6CB–14564–00	.SCREW .VIS	1	1				
10	6DA–14146–00	.PLATE .PLAQUE	1	1				
11	6DA–13892–00	.HOSE, AIR 2 .DURITE, A AIR 2	1	1				
12	6DA–13893–00	.HOSE, AIR 3 .DURITE, A AIR 3	1	1				
13	69J–24379–00	.PIPE, JOINT 4 .DURITE RACCORDEMENT 4	1	1				
14	6LH–14181–00	BODY, FLOAT CHAMBER 1 CORPS, CUVE DE FLOTTEUR 1	1	1				
15	6P2–14191–00	.PLUG, DRAIN .PLOT, VIDANGE	1	1				
16	6EK–24452–00	.COVER .COUVERCLE	1	1				
17	6K8–14591–10	.SCREW .VIS	3	3				
18	6CB–24482–00	.GASKET 1 .JOINT 1	1	1				
19	63P–14567–00	SCREW VIS	6	6				
20	63P–13716–00	COLLAR COLLERETTE	4	4				
21	6CB–13593–00	DAMPER AMORTISSEUR	4	4				
22	6LH–W1390–00	FUEL PUMP KIT KIT POMPE A CARBURANT	1	1				
23	6C5–14127–10	.CLIP .JONC	1	1				
24	6LH–13915–00	FILTER FILTRE	1	1				
25	6LH–13132–00	JOINT RACCORD	1	1				
26	6CB–14985–00	FLOAT FLOTTEUR	1	1				
27	6CB–14546–00	VALVE, NEEDLE POINTEAU	1	1				

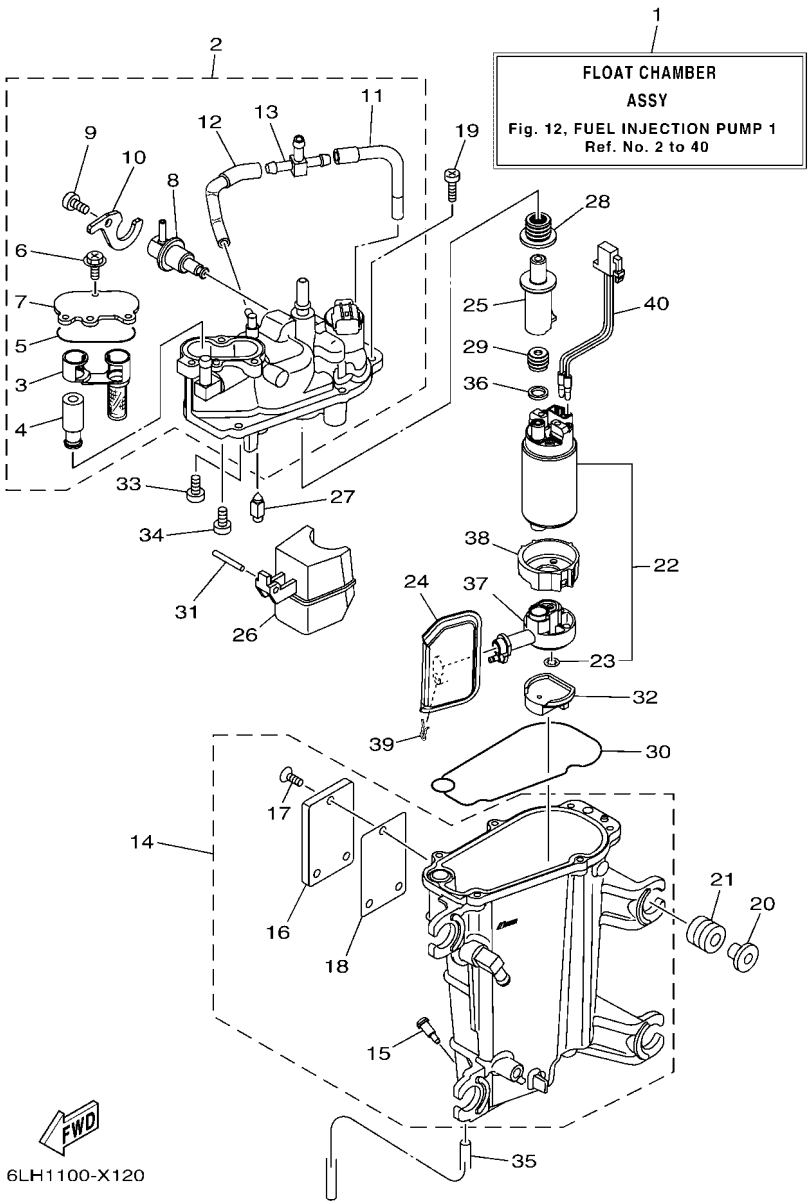

FIG. 12 FUEL INJECTION PUMP 1 — POMPE A INJECTEUR 1

REF. NO.	PART NO. N° PIECES	DESCRIPTION DESCRIPTION	XA	LA				REMARKS REMARQUES
28	6LH–1447B–00	BUSH 1 DOUILLE 1	1	1				
29	6LH–13781–00	DAMPER, PUMP AMORTISSEUR, POMPE	1	1				
30	6CB–14984–00	GASKET, FLOAT CHAMBER JOINT, CUVE DE FLOTTEUR	1	1				
31	6P2–14386–00	PIN, FLOAT AXE, FLOTTEUR	1	1				
32	6LH–13784–00	COVER, PUMP COUVERCLE, POMPE	1	1				
33	4SV–24453–00	SCREW VIS	1	1				
34	98507–04008	SCREW, PAN HEAD VIS, TETE TRONCONIQUE	1	1				
35	6P2–14149–00	PIPE DURITE	1	1				
36	6LH–13716–00	COLLAR COLLERETTE	1	1				
37	6LH–13938–00	PIPE DURITE	1	1				
38	6LH–24492–00	BUSH, FUEL PUMP BAGUE	1	1				
39	6FM–14137–00	CLIP JONC	1	1				
40	6LH–87226–00	WIRE HARNESS ASSY ENS. FAISCEAU ELECTRIQUE	1	1				

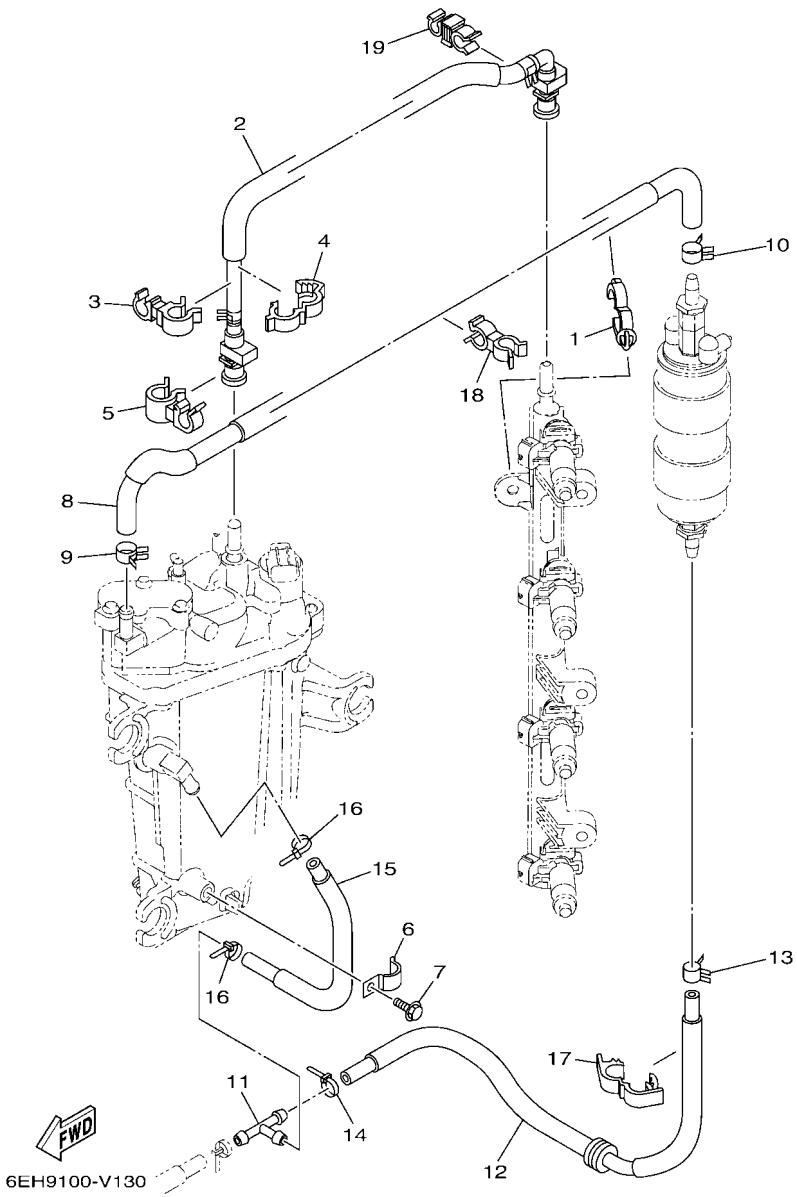

FIG. 13 FUEL INJECTION PUMP 2 — POMPE A INJECTEUR 2

REF. NO.	PART NO. N° PIECES	DESCRIPTION DESCRIPTION	XA	LA				REMARKS REMARQUES
1	90464–20181	CLAMP BRIDE	1	1				
2	6DA–24310–01	FUEL PIPE ASSY DURITE A ESSENCE	1	1				
3	90464–12010	CLAMP BRIDE	1	1				
4	90464–16003	CLAMP BRIDE	1	1				
5	90464–15007	CLAMP BRIDE	1	1				
6	90465–08M63	CLAMP BRIDE	1	1				
7	95D95–06010	BOLT, FLANGE DEEP RECESS BOULON FIXATION	1	1				
8	6DA–24324–10	PIPE 13 DURITE 13	1	1				
9	90467–120A7	CLIP JONC	1	1				
10	90467–140A9	CLIP JONC	1	1				
11	6E5–24378–00	PIPE, JOINT 3 DURITE, RACCORDEMENT 3	1	1				
12	6DA–24317–00	PIPE 7 DURITE 7	1	1				
13	90467–141A2	CLIP JONC	1	1				
14	90465–11M10	CLAMP BRIDE	1	1				
15	6DA–24323–00	PIPE 12 DURITE 12	1	1				
16	90465–11M10	CLAMP BRIDE	2	2				
17	90464–18004	CLAMP BRIDE	1	1				
18	90464–13260	CLAMP BRIDE	1	1				
19	90464–13013	CLAMP BRIDE	1	1				

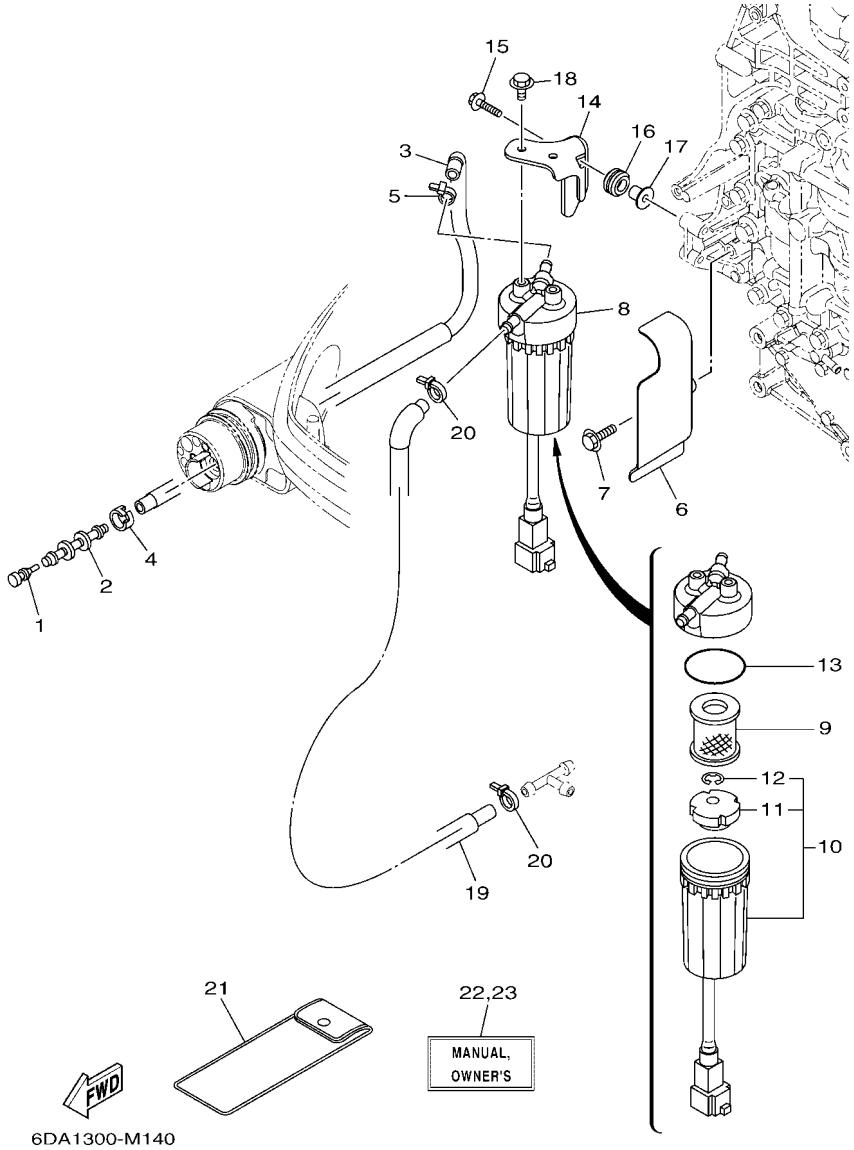

FIG. 14 FUEL 1 — CARBURANT 1

REF. NO.	PART NO. N° PIECES	DESCRIPTION DESCRIPTION	XA	LA				REMARKS REMARQUES
1	689–85547–01	DAMPER AMORTISSEUR	1	1				
2	6AW–24377–01	PIPE, JOINT 2 DURITE RACCORDEMENT 2	1	1				
3	6DA–24314–00	PIPE 4 DURITE 4	1	1				
4	6E5–24351–51	BAND 1 COLLIER 1	1	1				
5	90465–11M10	CLAMP BRIDE	1	1				
6	6DA–24596–01	COVER COUVERCLE	1	1				
7	95D95–06025	BOLT, FLANGE DEEP RECESS BOULON FIXATION	2	2				
8	6P3–24560–04	FILTER ASSY ENS FILTRE	1	1				
9	6P3–24563–02	.ELEMENT, FILTER .ELEMENT, FILTRE	1	1				
10	6P3–24562–03	.CUP, FILTER .CUVETTE, FILTRE	1	1				
11	6P3–24469–00	..FLOAT, WATER LEVEL ..FLOTTEUR	1	1				
12	6P3–24519–00	..CLIP ..JONC	1	1				
13	6P3–24564–00	.GASKET .JOINT	1	1				
14	6DA–24566–00	BRACKET, FILTER SUPPORT, FILTRE	1	1				
15	90119–06309	BOLT, WITH WASHER BOULON, AVEC RONDELLE	2	2				
16	90480–15013	GROMMET PASSE-FIL	2	2				
17	90387–06289	COLLAR COLLERETTE	2	2				
18	95D95–06012	BOLT, FLANGE DEEP RECESS BOULON FIXATION	2	2				
19	6DA–24313–00	PIPE 3 DURITE 3	1	1				
20	90465–11M10	CLAMP BRIDE	2	2				
21	69J–28100–03	TOOL KIT TROUSSE A OUTILS	1	1				AP AP
22	6EH–28199–74–E0	MANUAL,OWNER'S MANUEL D'UTILISATION	1	1				UR (E) UR (E)
	6EH–28199–74–F0	MANUAL,OWNER'S MANUEL D'UTILISATION	1	1				UR (F) UR (F)
	6EH–28199–74–S0	MANUAL,OWNER'S MANUEL D'UTILISATION	1	1				UR (ES) UR (ES)
	6EH–28199–74–G0	MANUAL,OWNER'S MANUEL D'UTILISATION	1	1				UR (D) UR (D)
	6EH–28199–74–D0	MANUAL,OWNER'S MANUEL D'UTILISATION	1	1				UR (NL) UR (NL)
	6EH–28199–74–H0	MANUAL,OWNER'S MANUEL D'UTILISATION	1	1				UR (I) UR (I)

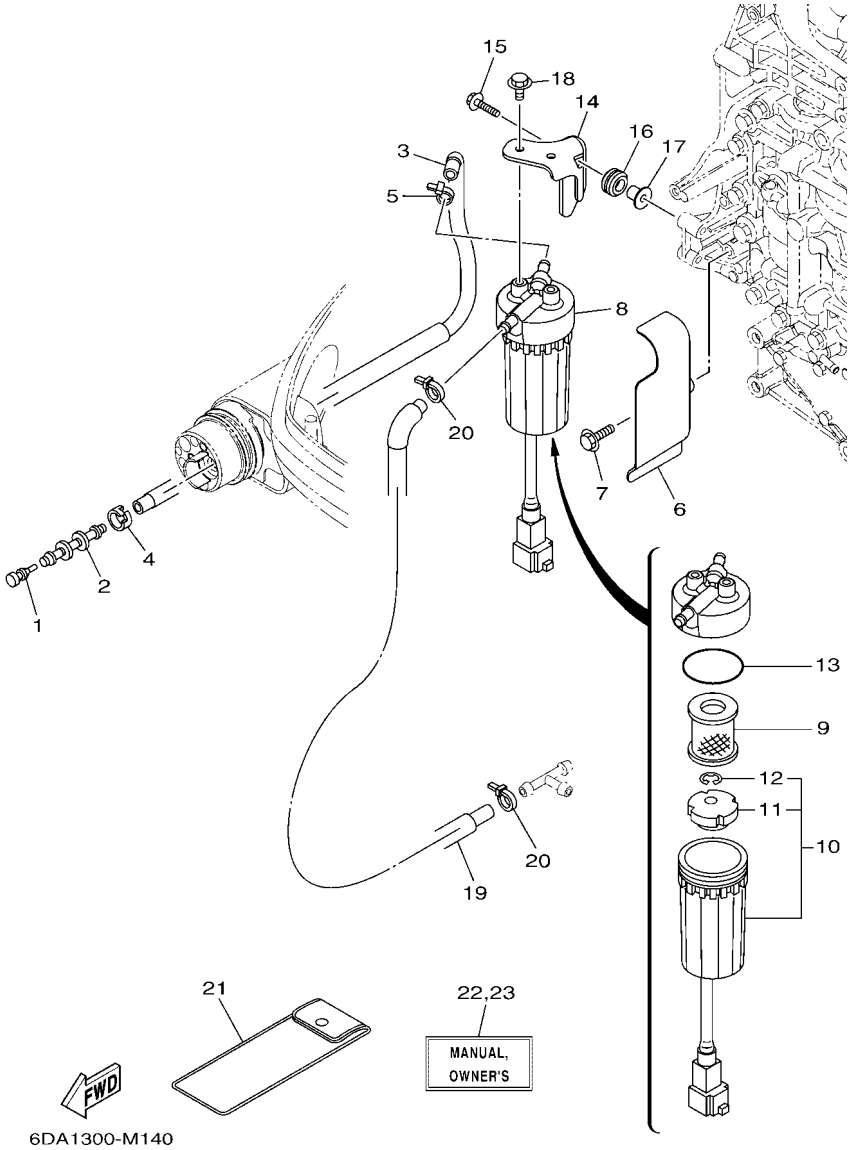

FIG. 14 FUEL 1 — CARBURANT 1

REF. NO.	PART NO. N° PIECES	DESCRIPTION DESCRIPTION	XA	LA				REMARKS REMARQUES
23	6EH–28199–84–K0	MANUAL,OWNER'S MANUEL D'UTILISATION	1	1				UR (DK) UR (DK)
	6EH–28199–84–R0	MANUAL,OWNER'S MANUEL D'UTILISATION	1	1				UR (GR) UR (GR)
	6EH–28199–84–P0	MANUAL,OWNER'S MANUEL D'UTILISATION	1	1				UR (P) UR (P)
	6EH–28199–84–N0	MANUAL,OWNER'S MANUEL D'UTILISATION	1	1				UR (N) UR (N)
	6EH–28199–84–M0	MANUAL,OWNER'S MANUEL D'UTILISATION	1	1				UR (S) UR (S)
	6EH–28199–84–L0	MANUAL,OWNER'S MANUEL D'UTILISATION	1	1				UR (SF) UR (SF)

FIG. 15 FUEL 2 CARBURANT 2

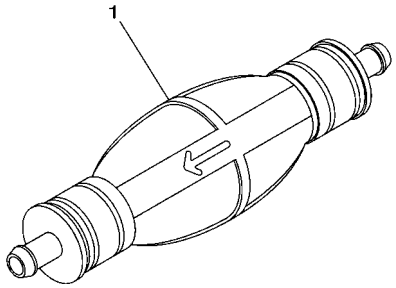

68VC100-L120

REF. NO.	PART NO. N° PIECES	DESCRIPTION DESCRIPTION	XA	LA				REMARKS REMARQUES
1	6YK–24360–73	PRIMER PUMP ASSY POMPE D'AMORCAGE	1	1				AP AP

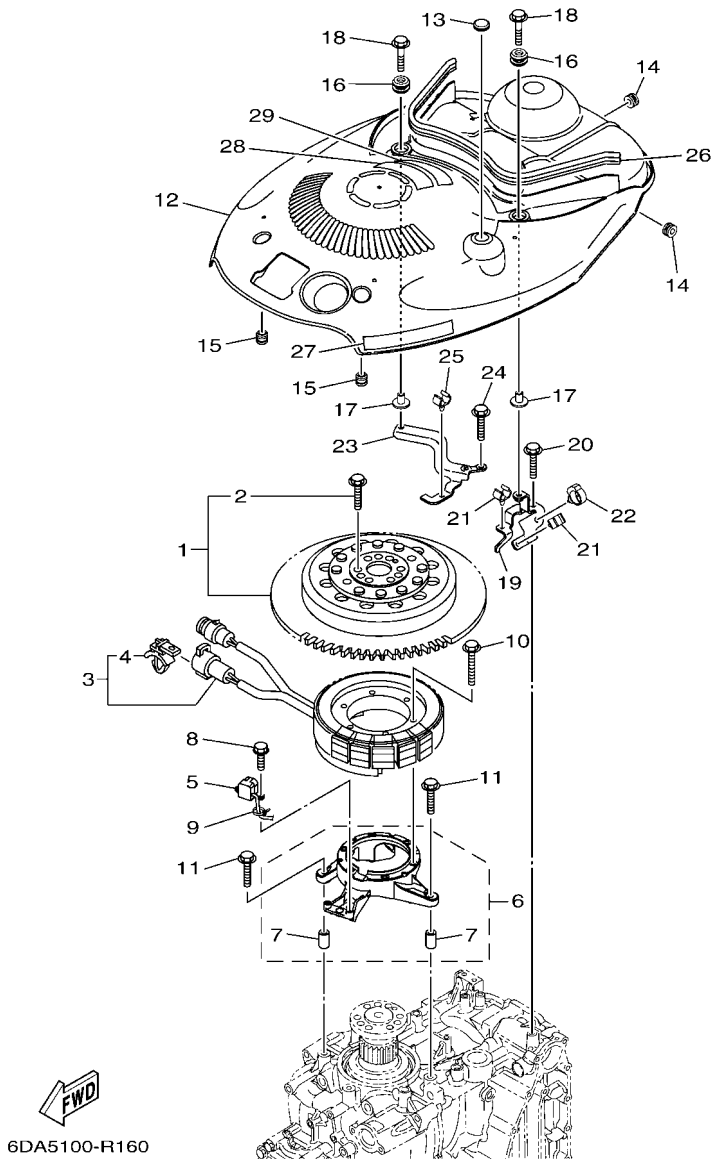

FIG. 16 GENERATOR — GENERATRICE

REF. NO.	PART NO. N° PIECES	DESCRIPTION DESCRIPTION	XA	LA				REMARKS REMARQUES
1	6DA–W8145–00	ROTOR ASSY WITH BOLTS ROTOR COMPLET AVEC BOULON	1	1				
2	6EK–W9010–00	.BOLT SET .BOULON ENS.	1	1				
3	6DA–81410–00	STATOR ASSY STATOR COMPLET	1	1				
4	90464–12002	.CLAMP .BRIDE	1	1				
5	6CB–85580–00	COIL, PULSER BOBINE, PULSEUR	1	1				
6	6DA–85561–00	BASE, MAGNETO BASE, MAGNETO	1	1				
7	99530–08012	.PIN, DOWEL .GOUJON, D'ASSEMBLAGE	2	2				
8	97595–05520	BOLT, WITH WASHER VIS HEXAGONAL AVC RONDELLE	2	2				
9	90465–13M97	CLAMP BRIDE	1	1				
10	95022–06035	BOLT, FLANGE BOULON, A COLLERETTE	6	6				
11	95D95–06030	BOLT, FLANGE DEEP RECESS BOULON FIXATION	4	4				
12	6DA–81337–01	COVER, FLYWHEEL COUVERCLE, VOLANT	1	1				
13	90480–16025	GROMMET PASSE-FIL	1	1				
14	90480–12314	GROMMET PASSE-FIL	2	2				
15	6A0–82317–01	DAMPER, IGNITION COIL AMORTISSEUR, BOBINE D'ALLUM	2	2				
16	6BG–42748–01	GROMMET PASSE-FIL	2	2				
17	90387–06M69	COLLAR COLLERETTE	2	2				
18	90119–06291	BOLT, WITH WASHER BOULON, AVEC RONDELLE	2	2				
19	6DA–8132G–01	PLATE PLAQUE	1	1				
20	95D95–06016	BOLT, FLANGE DEEP RECESS BOULON FIXATION	1	1				
21	90464–09130	CLAMP BRIDE	2	2				
22	90464–20181	CLAMP BRIDE	1	1				
23	6DA–82398–01	PLATE 3 PLAQUETTE 3	1	1				
24	95D95–06016	BOLT, FLANGE DEEP RECESS BOULON FIXATION	2	2				
25	90464–09130	CLAMP BRIDE	1	1				
26	6DA–42617–00	DAMPER, FORM BOURRELET, CAOUTCHOUC	1	1				
27	63P–13437–63	MARK, CAUTION MAKER	1	1				

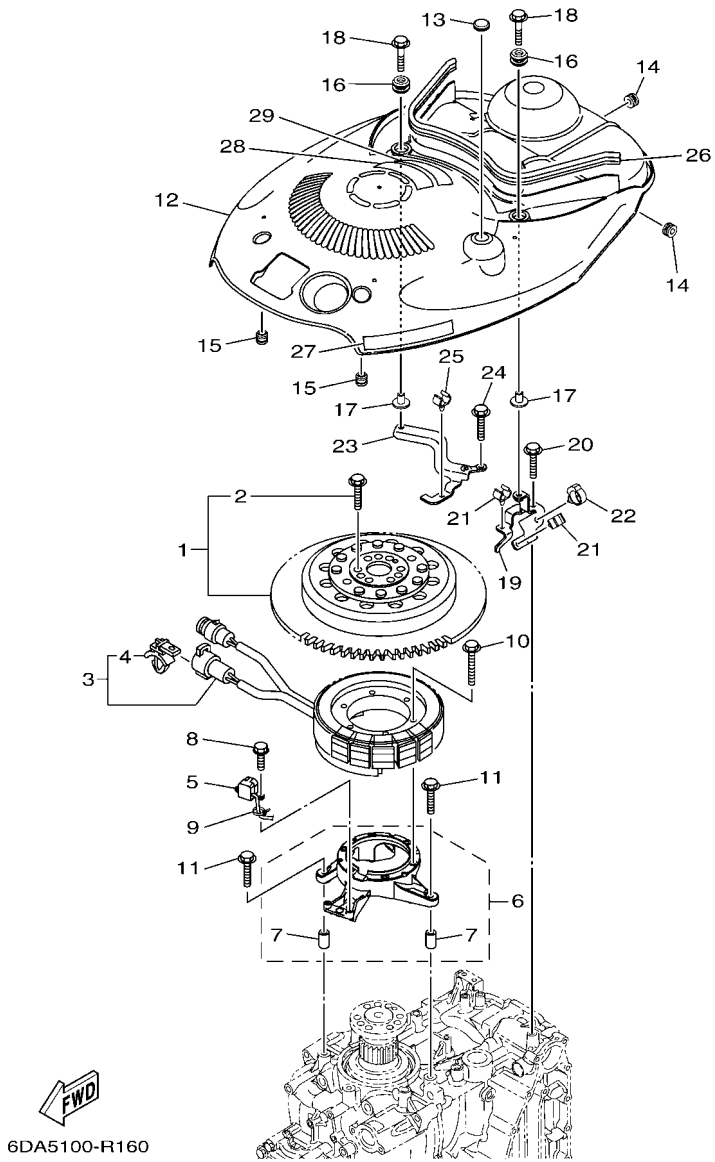

FIG. 16 GENERATOR — GENERATRICE

REF. NO.	PART NO. N° PIECES	DESCRIPTION DESCRIPTION	XA	LA				REMARKS REMARQUES
28	6EE–81994–40	LABEL, SAFETY ETIQUETTE, SECURITE	1	1				
29	6EE–81994–50	LABEL, SAFETY ETIQUETTE, SECURITE	1	1				

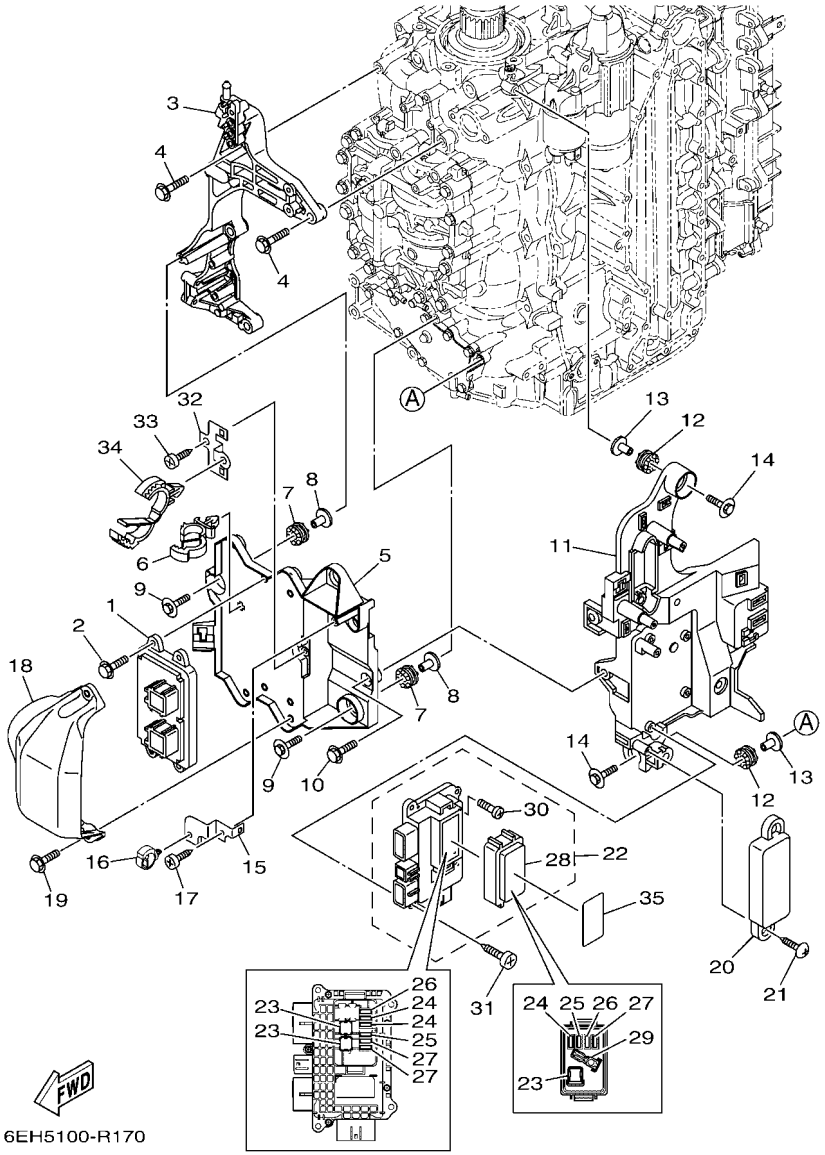

FIG. 17 ELECTRICAL 1 — PARTIE ELECTRIQUE 1

REF. NO.	PART NO. N° PIECES	DESCRIPTION DESCRIPTION	XA	LA				REMARKS REMARQUES
1	6FH–8591A–12	ENGINE CONTROL UNIT ASSY BLOC DE CONTROL	1	1				
2	95D95–06020	BOLT, FLANGE DEEP RECESS BOULON FIXATION	4	4				
3	6DA–85991–01	BRACKET, UNIT SUPPORT COMPLET	1	1				
4	95D75–08035	BOLT, FLANGE DEEP RECESS BOULON FIXATION	4	4				
5	6DA–81948–01	BRACKET SUPPORT	1	1				
6	90464–12183	CLAMP BRIDE	1	1				
7	68F–85516–01	SPACER ENTRETOISE	3	3				
8	90387–06176	COLLAR COLLERETTE	3	3				
9	68F–85119–00	BOLT BOULON	3	3				
10	95D95–06016	BOLT, FLANGE DEEP RECESS BOULON FIXATION	2	2				
11	6DA–81952–10	HOLDER, RELAY SUPPORT, RELAIS	1	1				
12	68F–85516–01	SPACER ENTRETOISE	3	3				
13	90387–06176	COLLAR COLLERETTE	3	3				
14	68F–85119–00	BOLT BOULON	3	3				
15	6DA–85548–10	HOLDER SUPPORT	1	1				
16	90464–20181	CLAMP BRIDE	1	1				
17	97780–60620	SCREW, TAPPING VIS, TETE BOMBEE	1	1				
18	6DA–81639–01	COVER COUVERCLE	1	1				
19	95D95–06020	BOLT, FLANGE DEEP RECESS BOULON FIXATION	2	2				
20	6DA–8252U–01	COVER COUVERCLE	1	1				
21	90169–05M00	SCREW, TRUSS HEAD TAPPING VIS, TETE FRAISEE	2	2				
22	6DA–82170–12	FUSE BOX ASSY BOITE A FUSIBLES	1	1				
23	6CB–82151–41	.FUSE (60A) .FUSIBLE (60A)	3	3				
24	6CB–82151–00	.FUSE (10A) .FUSIBLE (10A)	3	3				
25	6CB–82151–10	.FUSE (15A) .FUSIBLE (15A)	2	2				
26	6CB–82151–20	.FUSE (20A) .FUSIBLE (20A)	2	2				
27	6CB–82151–30	.FUSE (30A) .FUSIBLE (30A)	3	3				

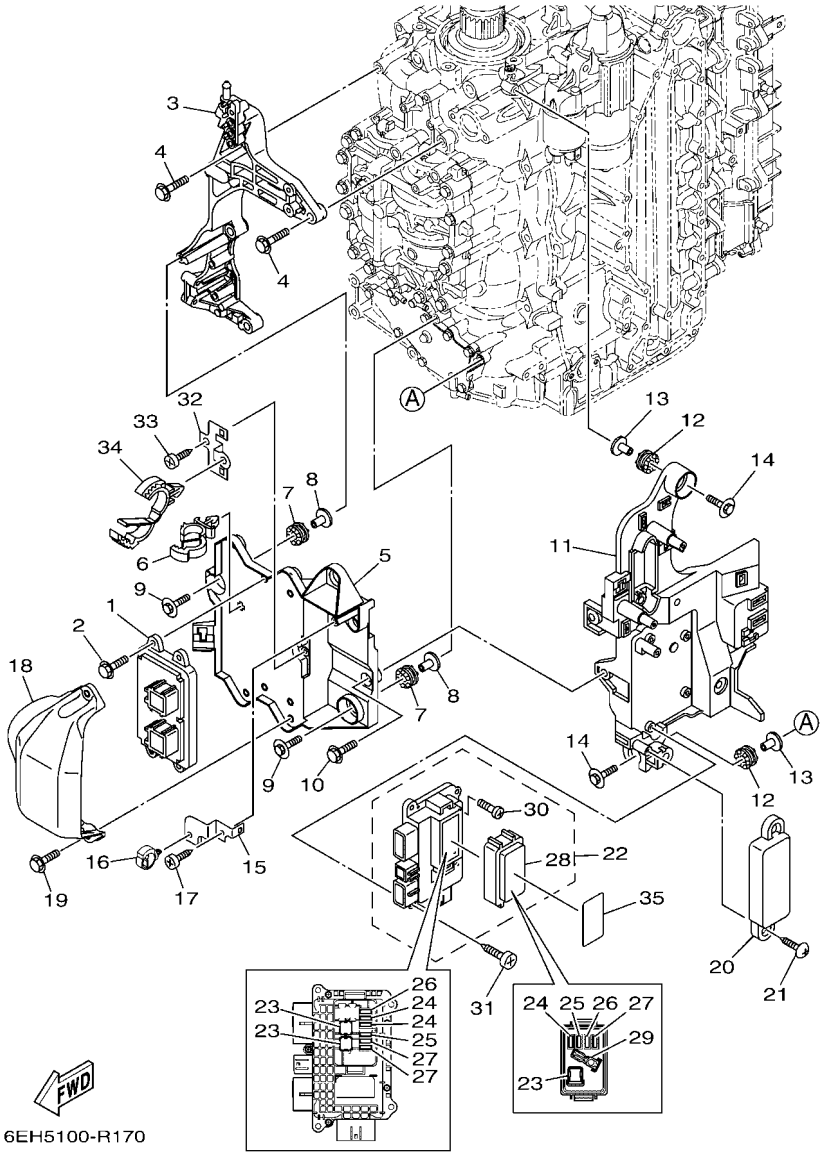

FIG. 17 ELECTRICAL 1 — PARTIE ELECTRIQUE 1

REF. NO.	PART NO. N° PIECES	DESCRIPTION DESCRIPTION	XA	LA				REMARKS REMARQUES
28	6CB–85544–10	.COVER .COUVERCLE	1	1				
29	6CB–2812A–00	.PULLER, FUSE .TENDEUR, FUSIBLE	1	1				
30	6P2–82113–00	.SCREW (M3) .VIS (M3)	5	5				
31	97780–50620	SCREW, TAPPING VIS, TETE BOMBEE	4	4				
32	6DA–8257V–00	PLATE, CONNECTOR PLAQUE, CONNECTEUR	1	1				
33	97780–60620	SCREW, TAPPING VIS, TETE BOMBEE	1	1				
34	90464–32002	CLAMP BRIDE	1	1				
35	6DA–81919–11	GRAPHIC, REGULATOR ADHESIF, REGULATEUR	1	1				

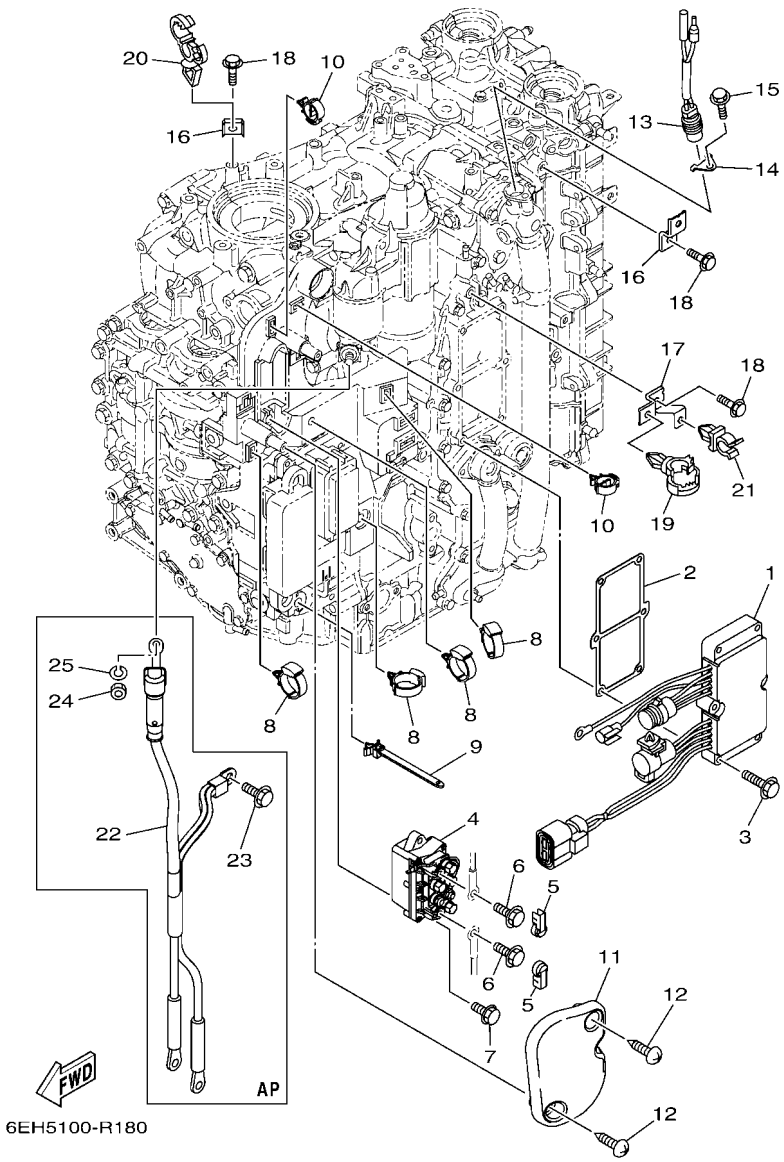

FIG. 18 ELECTRICAL 2 — PARTIE ELECTRIQUE 2

REF. NO.	PART NO. N° PIECES	DESCRIPTION DESCRIPTION	XA	LA				REMARKS REMARQUES
1	6DA–81960–10	RECTIFIER & REGULATOR ASSY REDRESSEUR REGULATEUR CPLT	1	1				
2	6DA–81975–01	PLATE, RECTIFIER FITTING PLAQUE, FIXATION DU REDRESSEUR	1	1				
3	97E95–06535	BOLT, HEXAGON W/W DEEP RECESS VIS HEXAGONAL AVC RONDELLE	6	6				
4	63P–81950–00	RELAY ASSY RELAIS COMPLET	1	1				
5	6P2–8183X–00	CAP, TERMINAL COUVERCLE, BORNE	2	2				
6	97E95–06610	BOLT, HEXAGON W/W DEEP RECESS VIS HEXAGONAL AVC RONDELLE	2	2				
7	97E95–06520	BOLT, HEXAGON W/W DEEP RECESS VIS HEXAGONAL AVC RONDELLE	2	2				
8	90464–12183	CLAMP BRIDE	4	4				
9	90464–12089	CLAMP BRIDE	1	1				
10	90464–18246	CLAMP BRIDE	2	2				
11	6DA–81942–01	COVER COUVERCLE	1	1				
12	90169–05M00	SCREW, TRUSS HEAD TAPPING VIS, TETE FRAISEE	2	2				
13	6P2–82560–01	THERMO SWITCH ASSY THERMO-CONTACT COMPLET	1	1				
14	6E9–82588–00	PLATE PLAQUE	1	1				
15	95D95–06012	BOLT, FLANGE DEEP RECESS BOULON FIXATION	1	1				
16	6DA–82388–00	PLATE PLAQUETTE	2	2				
17	6DA–82389–00	PLATE 2 PLAQUETTE 2	1	1				
18	95D95–06016	BOLT, FLANGE DEEP RECESS BOULON FIXATION	3	3				
19	90464–20181	CLAMP BRIDE	1	1				
20	90464–13249	CLAMP BRIDE	1	1				
21	90464–09008	CLAMP BRIDE	1	1				
22	6DA–82105–02	BATTERY CABLE CABLE DE BATTERIE	1	1				AP AP
23	95D95–08016	BOLT, FLANGE DEEP RECESS BOULON FIXATION	1	1				AP AP
24	95333–08600	NUT ECROU	1	1				AP AP
25	92903–08100	WASHER, SPRING RONDELLE, GROWER	1	1				AP AP

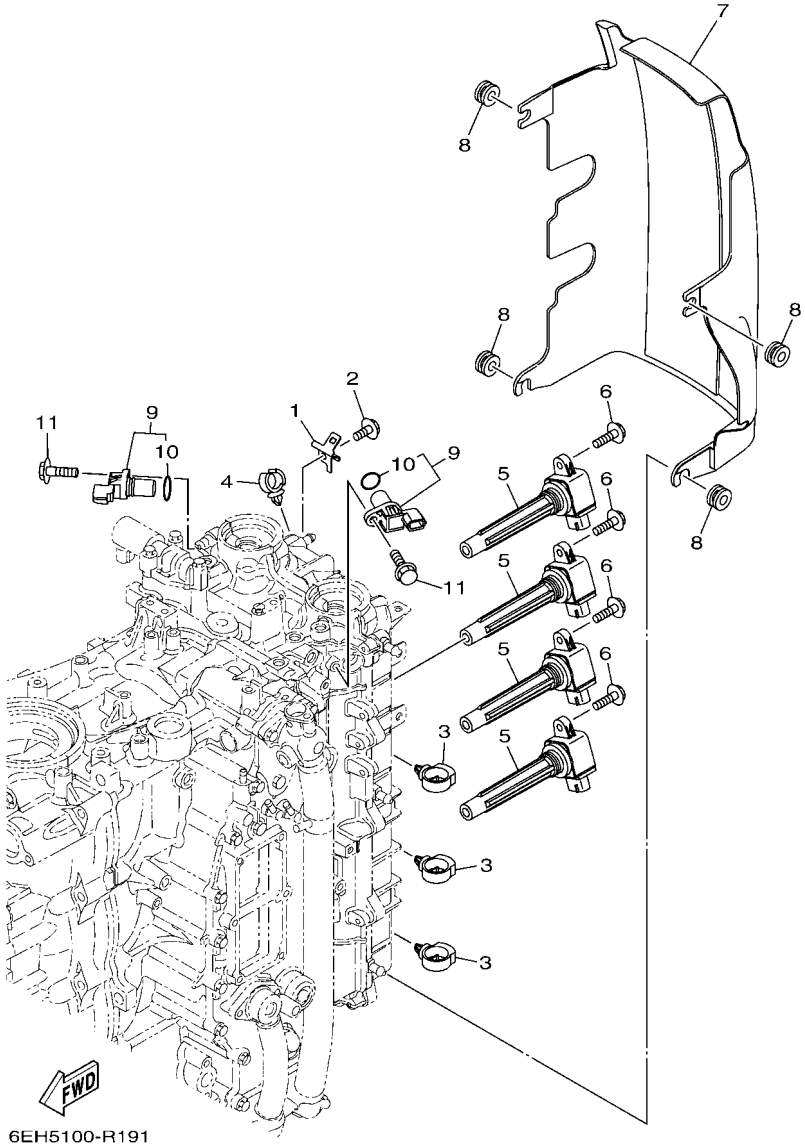

FIG. 19 ELECTRICAL 3 — PARTIE ELECTRIQUE 3

REF. NO.	PART NO. N° PIECES	DESCRIPTION DESCRIPTION	XA	LA				REMARKS REMARQUES
1	6D8–82389–01	PLATE 2 PLAQUETTE 2	1	1				
2	95D95–06012	BOLT, FLANGE DEEP RECESS BOULON FIXATION	1	1				
3	90464–20181	CLAMP BRIDE	3	3				
4	90464–13249	CLAMP BRIDE	1	1				
5	6CB–82310–02	IGNITION COIL ASSY BOBINE D'ALLUMAGE	4	4				
6	95D95–06025	BOLT, FLANGE DEEP RECESS BOULON FIXATION	4	4				
7	6DA–82314–01	COVER, IGNITION COIL COUVERCLE, BOBINE D'ALLUMAGE	1	1				
8	90480–12314	GROMMET PASSE-FIL	4	4				
9	6P2–85896–00	SENSOR, CAM POSITION SONDE DE CAME	2	2				
10	6P2–85075–00	.O-RING .JOINT TORIQUE	1	1				
11	97E95–06520	BOLT, HEXAGON W/W DEEP RECESS VIS HEXAGONAL AVC RONDELLE	2	2				

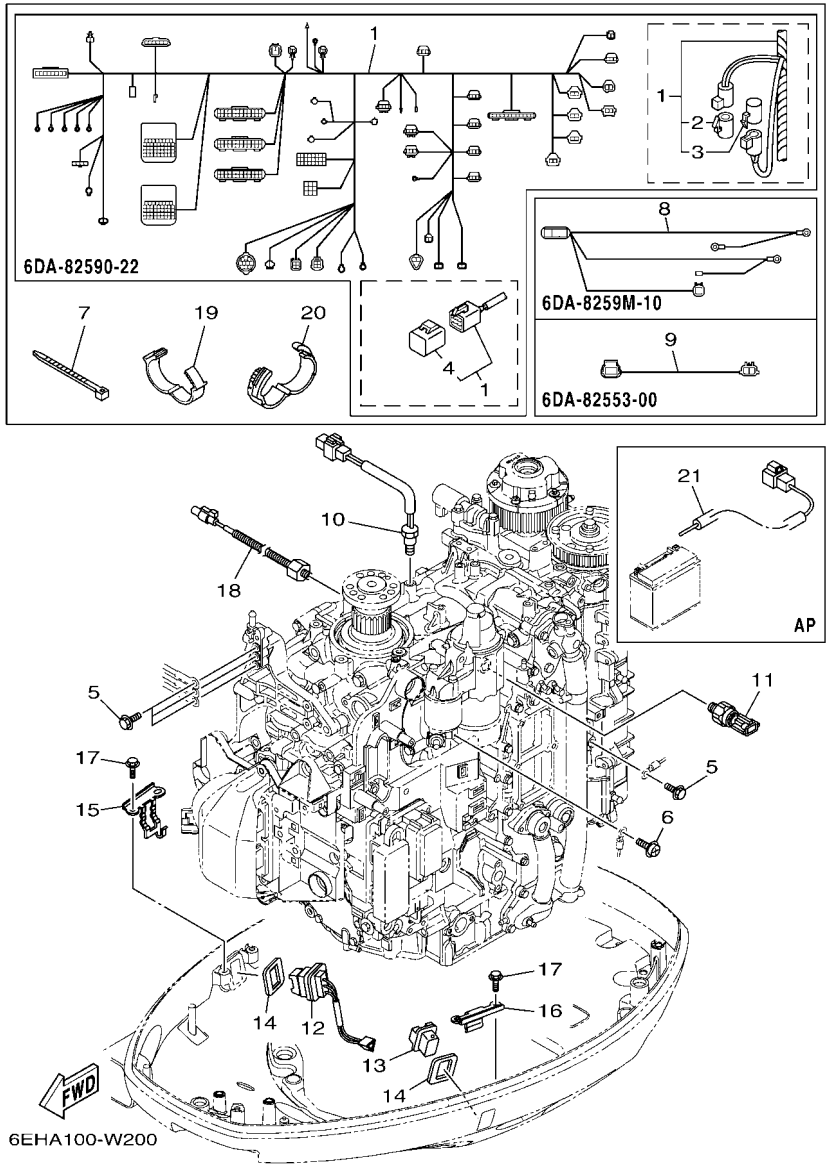

FIG. 20 ELECTRICAL 4 — PARTIE ELECTRIQUE 4

REF. NO.	PART NO. N° PIECES	DESCRIPTION DESCRIPTION	XA	LA				REMARKS REMARQUES
1	6DA–82590–22	WIRE HARNESS ASSY FAISCEAU DE FILS COMPLET	1	1				
2	6DA–82582–00	.CAP 1 (FEMALE) .BOUCHON 1 (FEMME)	1	1				
3	6DA–82582–10	.CAP 1 (MALE) .BOUCHON 1 (MALE)	1	1				
4	6Y8–82582–11	.CAP 1 (4PIN) .COUVERCLE 1 (4P)	1	1				
5	97E95–06516	BOLT, HEXAGON W/W DEEP RECESS VIS HEXAGONAL AVC RONDELLE	4	4				
6	97985–04308	SCREW, WITH WASHER VIS, AVEC RONDELLE	1	1				
7	90465–11M59	CLAMP BRIDE	1	1				
8	6DA–8259M–10	WIRE HARNESS ASSY 2 FAISCEAU DE FILS	1	1				
9	6DA–82553–00	EXTENSION, WIRE LEAD EXTENSION, FAISCEAU	1	1				
10	6CB–85790–00	THERMOSENSOR ASSY SENSITOMETRE	1	1				
11	6AW–83651–01	SENDER, OIL PRESSURE RACCORD, PRESSION D'HUILE	1	1				
12	69J–82563–01	TRIM & TILT SWITCH ASSY INCLINER ET PARER COMMUTATEUR	1	1				
13	69J–42723–01	COVER, BOTTOM COUVERCLE	1	1				
14	69J–82587–01	GASKET JOINT	2	2				
15	63P–83614–01	BRACKET SUPPORT	1	1				
16	6DA–83614–00	BRACKET SUPPORT	1	1				
17	95D95–06012	BOLT, FLANGE DEEP RECESS BOULON FIXATION	4	4				
18	6CJ–85780–01	SENSOR, KNOCK SONDE DE COGNEMENT	1	1				
19	90464–26001	CLAMP BRIDE	5	5				
20	90464–28003	CLAMP BRIDE	2	2				
21	69J–81949–03	WIRE, LEAD (ISOLATOR, 3.8M) FIL (ISOLATOR, 3.8M)	1	1				AP AP

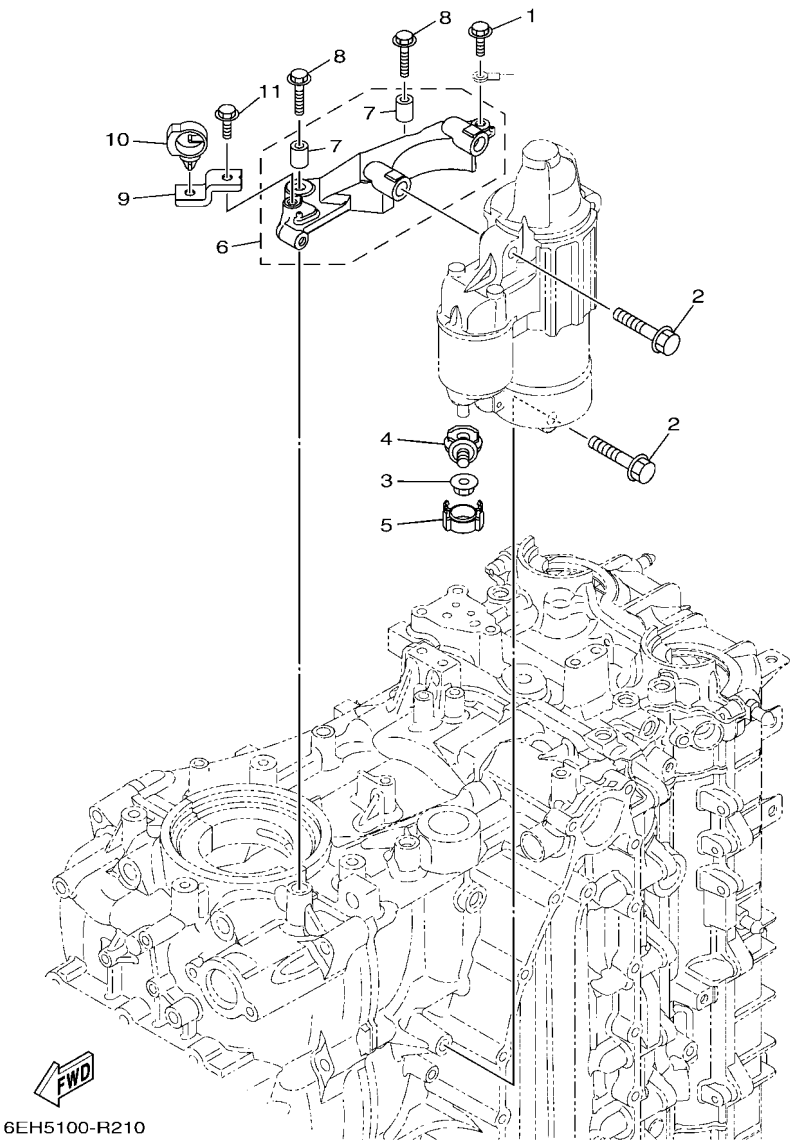

FIG. 21 ELECTRICAL 5 — PARTIE ELECTRIQUE 5

REF. NO.	PART NO. N° PIECES	DESCRIPTION DESCRIPTION	XA	LA				REMARKS REMARQUES
1	97E95–06516	BOLT, HEXAGON W/W DEEP RECESS VIS HEXAGONAL AVC RONDELLE	1	1				
2	97513–08545	BOLT, WITH WASHER VIS HEXAGONAL AVC RONDELLE	3	3				
3	90179–08003	NUT ECROU	1	1				
4	60V–81925–00	TERMINAL BORNE	1	1				
5	68F–82582–00	CAP,1 COUVERCLE 1	1	1				
6	6DA–81822–00	BRACKET, STARTING MOTOR SUPPORT, DEMARREUR ELECTRIQUE	1	1				
7	99590–10114	.PIN, DOWEL .GOUJON, D'ASSEMBLAGE	2	2				
8	90105–08M87	BOLT, FLANGE BOULON, A COLLERETTE	2	2				
9	6DA–82388–00	PLATE PLAQUETTE	1	1				
10	90464–20181	CLAMP BRIDE	1	1				
11	95D95–06016	BOLT, FLANGE DEEP RECESS BOULON FIXATION	1	1				

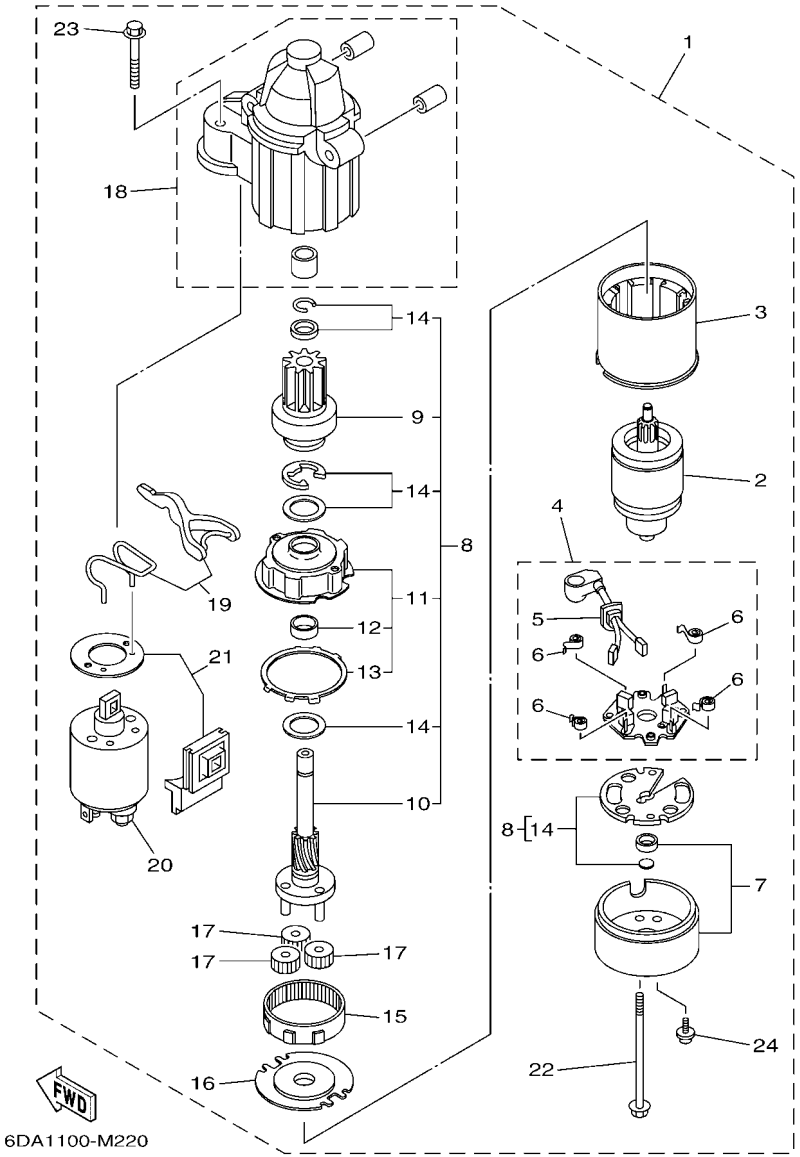

FIG. 22 STARTING MOTOR — DEMARREUR ELECTRIQUE

REF. NO.	PART NO. N° PIECES	DESCRIPTION DESCRIPTION	XA	LA				REMARKS REMARQUES
1	6CB–81800–02	STARTING MOTOR ASSY DEMARREUR ELECTRIQUE COMPLET	1	1				
2	67F–81850–00	.ARMATURE ASSY .INDUIT	1	1				
3	67F–81810–00	.STATOR ASSY .STATOR COMPLET	1	1				
4	69J–81840–11	.BRUSH HOLDER ASSY .SUPPORT DE CHARBON	1	1				
5	69J–81801–11	..BRUSH SET ..JEU DE BROSSE	1	1				
6	67F–81813–00	..SPRING, BRUSH ..RESSORT, DE CHARBON	4	4				
7	6CB–81820–00	.REAR BRACKET ASSY .SUPPORT ARRIERE COMPLET	1	1				
8	6CB–81807–00	.GEAR ASSY, STARTING MOTOR .PIGNON, DEMARREUR ELECTRIQUE	1	1				
9	6CB–81832–00	..CLUTCH, OVER RUN ..EMBRAYAGE, ROUE LIBRE	1	1				
10	6CB–81836–00	..SHAFT, PINION ..AXE, PIGNON	1	1				
11	67F–81821–00	..BRACKET, CENTER 1 ..SUPPORT, CENTRE 1	1	1				
12	67F–81841–00	...BEARING ...ROULEMENT	1	1				
13	67F–8183R–00	...GASKET ...JOINT	1	1				
14	6CB–81809–00	..WASHER KIT ..JEU DE RONDELLES	1	1				
15	67F–81891–00	.GEAR, RING .ROUE DENTEE	1	1				WITH 67F-8183R-00 WITH 67F-8183R-00
16	67F–81830–00	.BRACKET, CENTER 2 .SUPPORT, CENTRE 2	1	1				
17	60V–8183T–00	.GEAR, IDLER .PIGNON, INTERMEDIAIRE	3	3				
18	6CB–81842–00	.COVER .COUVERCLE	1	1				
19	6C5–81839–00	.LEVER ASSY .LEVIER COMPLET	1	1				
20	6C5–81941–01	.STARTER RELAY ASSY .LANCEUR RELAIS (ENS.)	1	1				
21	6C5–81869–00	.COVER, DUST .COUVERCLE, POUSSIERE	1	1				
22	6CB–81826–00	.BOLT .BOULON	2	2				
23	69J–81828–00	.BOLT 2 .BOULON 2	2	2				
24	67F–81846–00	.SCREW .VIS	2	2				

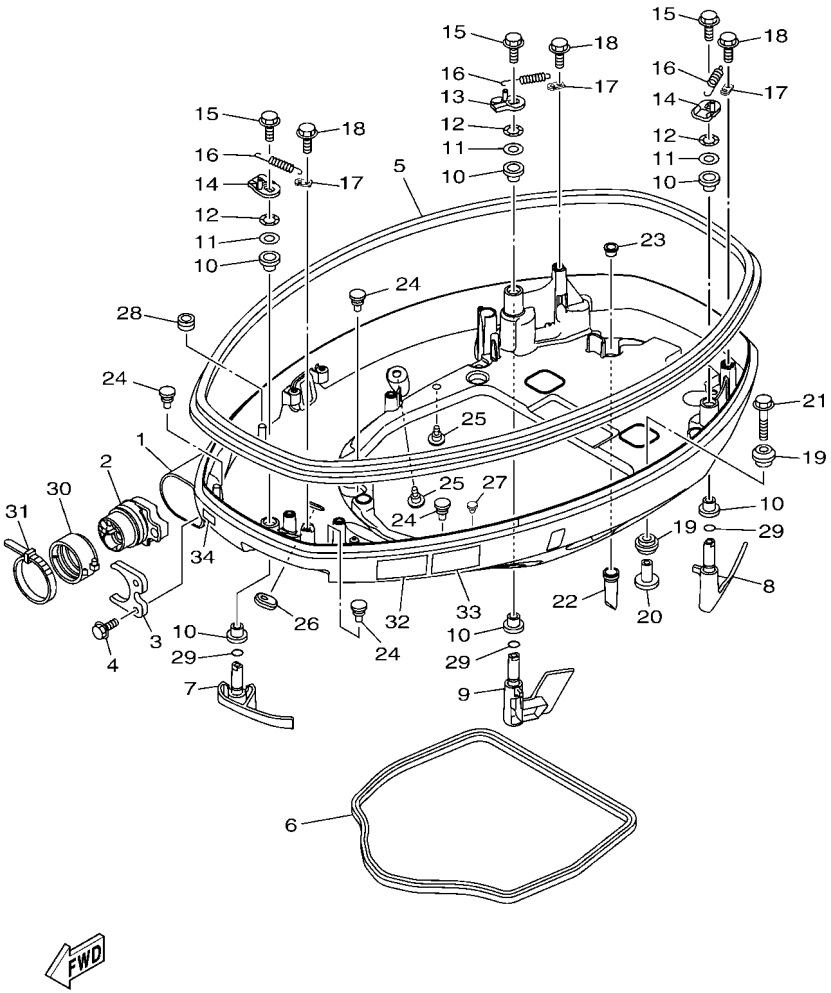

FIG. 23 BOTTOM COWLING 1 — CAPOT INFERIEUR 1

REF. NO.	PART NO. N° PIECES	DESCRIPTION DESCRIPTION	XA	LA				REMARKS REMARQUES
1	6DA–42710–00–8D	BOTTOM COWLING ASSY ENS. EMBASE	1	1				
2	6DA–42725–03	GROMMET PASSE-FIL	1	1				
3	6CB–42761–00	STOPPER PLAQUETTE	1	1				
4	95D95–06014	BOLT, FLANGE DEEP RECESS BOULON FIXATION	2	2				
5	6DA–42615–00	SEAL JOINT	1	1				
6	63P–42716–01	RUBBER SEAL 1 JOINT EN CAOUTCHOUC 1	1	1				
7	6DA–42815–01–8D	LEVER, CLAMP 1 LEVIER, PRESSE 1	1	1				
8	6DA–42816–02–8D	LEVER, CLAMP 2 LEVIER, PRESSE 2	1	1				
9	6DA–42817–02–8D	LEVER, CLAMP 3 LEVIER, PRESSE 3	1	1				
10	90386–15M73	BUSH DOUILLE	6	6				
11	90201–156J2	WASHER, PLATE RONDELLE, PLATE	3	3				
12	90206–15M18	WASHER, WAVE RONDELLE, ONDULEE	3	3				
13	6CB–42818–00	LEVER, CLAMP 4 LEVIER, PRESSE 4	1	1				
14	6CB–42819–00	LEVER, CLAMP 5 LEVIER, PRESSE 5	2	2				
15	95D95–08012	BOLT, FLANGE DEEP RECESS BOULON FIXATION	3	3				
16	90506–22001	SPRING, TENSION RESSORT, TENSION	3	3				
17	66T–43144–00	HOOK, SPRING CROCHET	3	3				
18	95D95–06012	BOLT, FLANGE DEEP RECESS BOULON FIXATION	3	3				
19	90480–22M81	GROMMET PASSE-FIL	8	8				
20	90387–08M37	COLLAR COLLERETTE	4	4				
21	90119–08187	BOLT, WITH WASHER BOULON, AVEC RONDELLE	4	4				
22	6DA–42717–01	RUBBER, SEAL 2 JOINT EN CAOUTCHOUC 2	4	4				
23	6DA–42384–00	SEAL, CAP JOINT, CAPUCHON	4	4				
24	6H4–42748–01	GROMMET PASSE-FIL	4	4				
25	6P2–44391–00	NIPPLE, HOSE RACCORD D'ESSENCE	2	2				
26	6KA–42727–00	GROMMET PASSE-FIL	1	1				
27	90269–07003	RIVET RIVET	1	1				

FIG. 23 BOTTOM COWLING 1 — CAPOT INFERIEUR 1

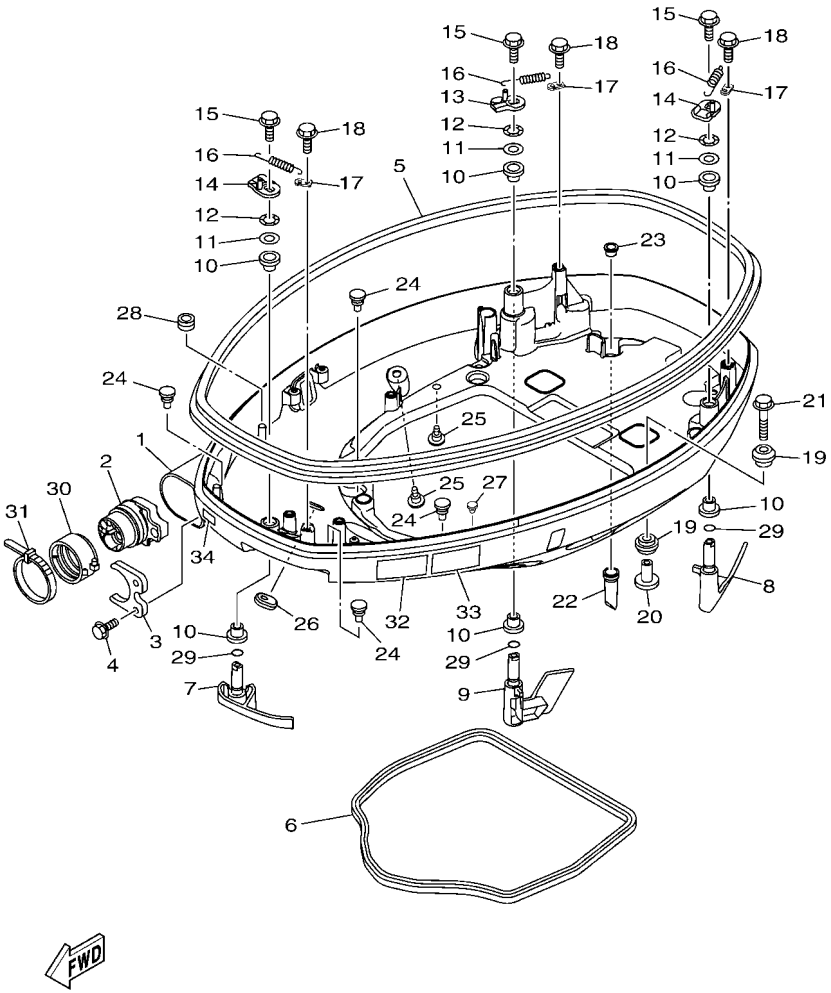

REF. NO.	PART NO. N° PIECES	DESCRIPTION DESCRIPTION	XA	LA				REMARKS REMARQUES
28	90480–13163	GROMMET PASSE-FIL	1	1				
29	93210–13M63	O-RING JOINT TORIQUE	3	3				
30	68F–42753–00	FASTNER ATTACHE	1	1				AP AP
31	90464–20258	CLAMP BRIDE	1	1				AP AP
32	6EE–42794–40	LABEL, WARNING (GENERAL) ETIQUETTE, AVERTISSEMENT	1	1				
33	6EE–42794–50	LABEL, WARNING (GENERAL) ETIQUETTE, AVERTISSEMENT	1	1				
34	6AH–81996–00	MARK MARQUE	1	1				

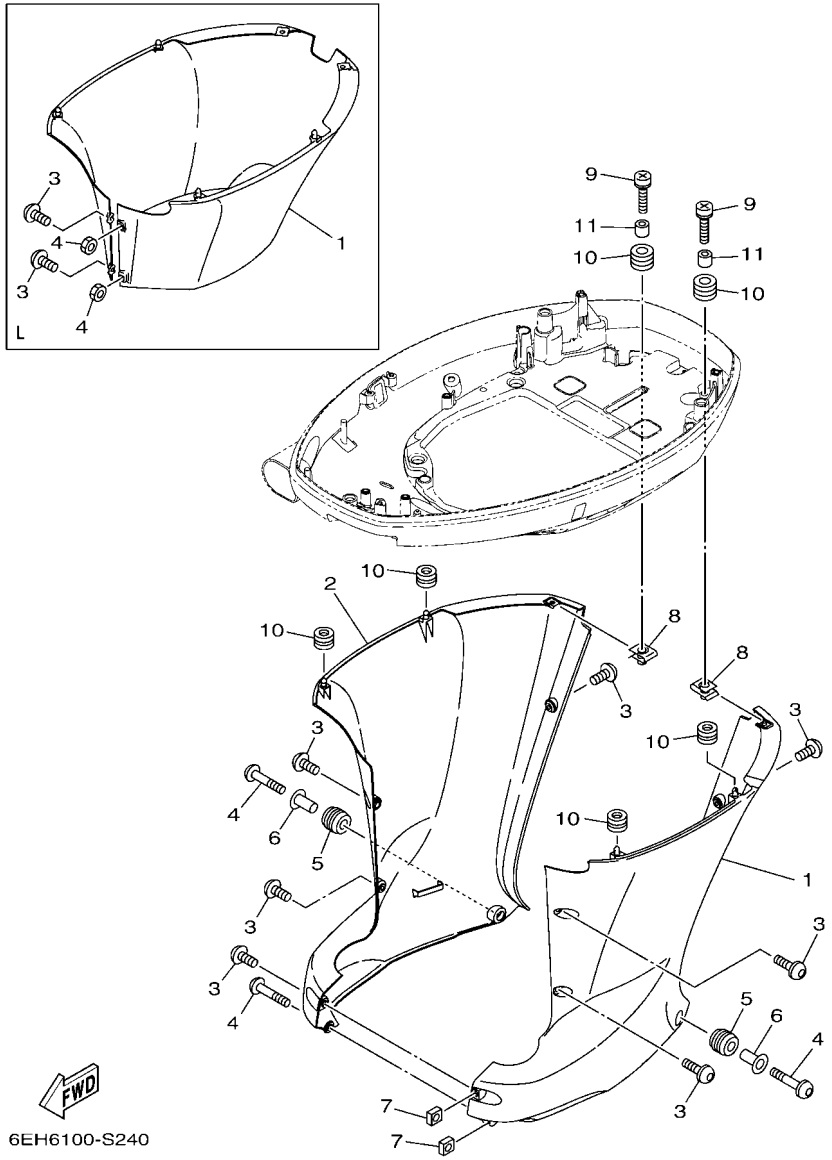

FIG. 24 BOTTOM COWLING 2 — CAPOT INFERIEUR 2

REF. NO.	PART NO. N° PIECES	DESCRIPTION DESCRIPTION	XA	LA				REMARKS REMARQUES
1	6DA–42740–01	APRON COMPLETE 1 CAPOT LATERAL COMPLETE 1	1					X(25.3") X(25.3")
	6DA–42741–11–8D	APRON CAPOT LATERAL		1				L(20.3") L(20.3")
2	6DA–42770–01	APRON COMPLETE 2 CAPOT LATERAL COMPLETE 2	1					X(25.3") X(25.3")
3	90111–06144	BOLT, HEXAGON SOCKET BUTTON BOULON	7					X(25.3") X(25.3")
	90159–06M28	SCREW, WITH WASHER VIS, AVEC RONDELLE		2				L(20.3") L(20.3")
4	90111–06142	BOLT, HEXAGON SOCKET BUTTON BOULON	3					X(25.3") X(25.3")
	95380–06600	NUT, HEXAGON ECROU		2				L(20.3") L(20.3")
5	90480–16009	GROMMET PASSE-FIL	2					X(25.3") X(25.3")
6	90387–07028	COLLAR COLLERETTE	2					X(25.3") X(25.3")
7	90173–06001	NUT, SQUARE ECROU, CARRE	2					X(25.3") X(25.3")
8	90183–061A8	NUT, SPRING ECROU, RESSORT	2	2				
9	90159–06053	SCREW, WITH WASHER VIS, AVEC RONDELLE	2	2				
10	90480–13M24	GROMMET PASSE-FIL	6	6				
11	90387–06M43	COLLAR COLLERETTE	2	2				

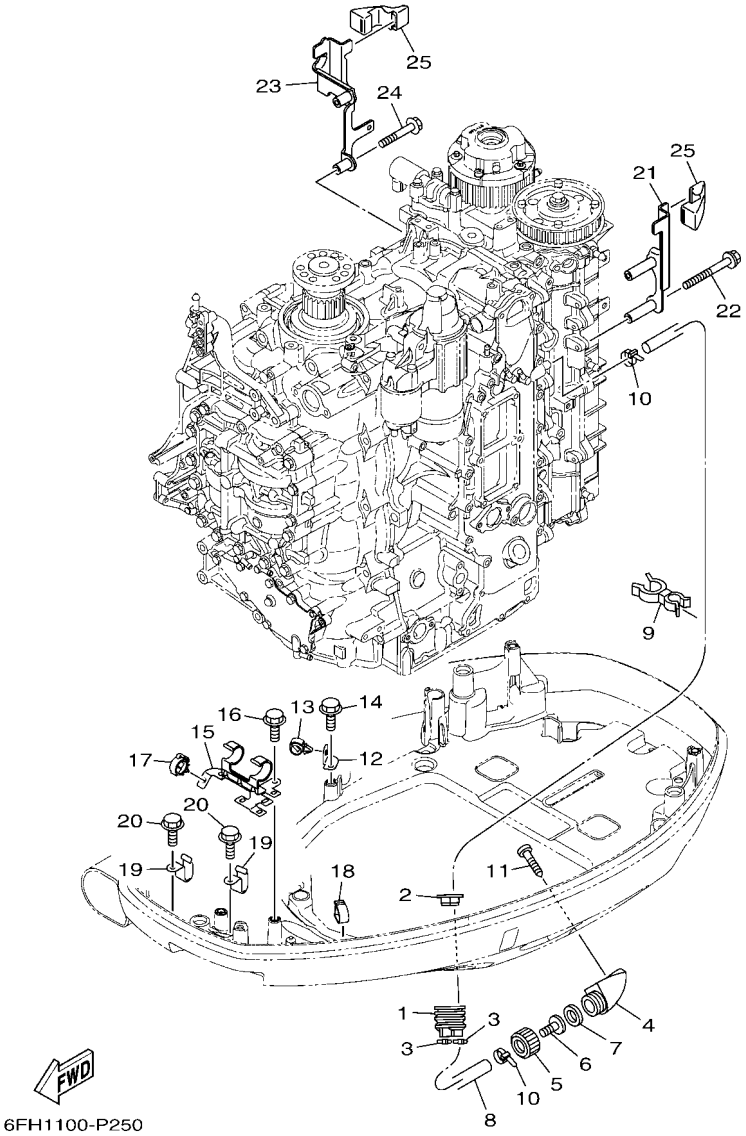

FIG. 25 BOTTOM COWLING 3 — CAPOT INFERIEUR 3

REF. NO.	PART NO. N° PIECES	DESCRIPTION DESCRIPTION	XA	LA				REMARKS REMARQUES
1	6H1–42726–22	GROMMET PASSE-FIL	1	1				
2	6BG–42384–00	SEAL, CAP JOINT, CAPUCHON	1	1				
3	90465–11M10	CLAMP BRIDE	2	2				
4	6AW–12572–00	ADAPTER ADAPTATEUR	1	1				
5	6R3–12581–00	JOINT, HOSE 1 JOINT DE TUYAU	1	1				
6	6AW–12582–00	JOINT, HOSE 2 RACCORD DE TUYAU 1	1	1				
7	6R3–12583–00	GASKET, HOSE JOINT JOINT	1	1				
8	6DA–42541–00	PIPE 1 TUYAU 1	1	1				
9	90464–21256	CLAMP BRIDE	1	1				
10	90465–11M10	CLAMP BRIDE	2	2				
11	97780–60520	SCREW, TAPPING VIS, TETE BOMBEE	2	2				
12	63P–42756–00	STAY, CLAMP SUPPORT, COLLIER	1	1				
13	90464–13249	CLAMP BRIDE	1	1				
14	95D95–06012	BOLT, FLANGE DEEP RECESS BOULON FIXATION	1	1				
15	6DA–8366G–00	BRACKET 3 SUPPORT 3	1	1				
16	95D95–06012	BOLT, FLANGE DEEP RECESS BOULON FIXATION	2	2				
17	90464–18246	CLAMP BRIDE	1	1				
18	90464–18004	CLAMP BRIDE	1	1				
19	90462–12013	CLAMP BRIDE	2	2				
20	95D95–06012	BOLT, FLANGE DEEP RECESS BOULON FIXATION	2	2				
21	6DA–11998–00	BRACKET 1 SUPPORT 1	1	1				
22	95D95–06065	BOLT, FLANGE DEEP RECESS BOULON FIXATION	2	2				
23	6DA–11999–00	BRACKET 2 SUPPORT 2	1	1				
24	95D95–06040	BOLT, FLANGE DEEP RECESS BOULON FIXATION	2	2				
25	6CB–42662–02	DAMPER AMORTISSEUR	2	2				

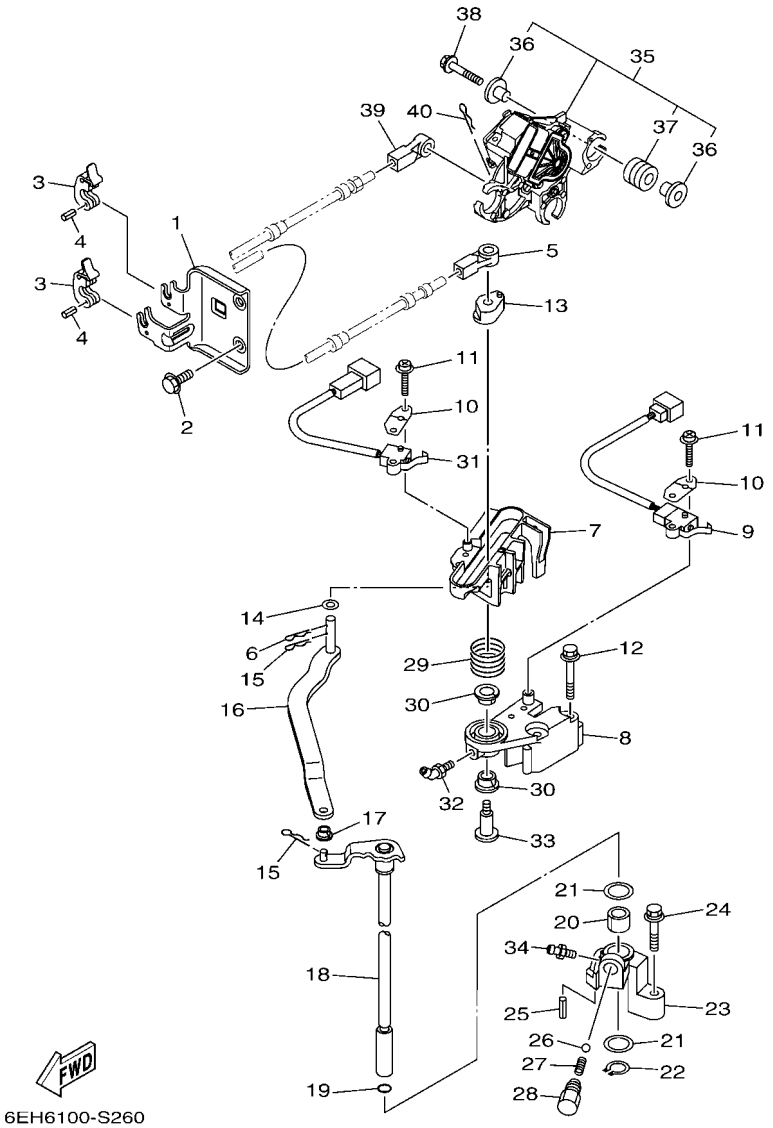

FIG. 26 CONTROL COMMANDE

REF. NO.	PART NO. N° PIECES	DESCRIPTION DESCRIPTION	XA	LA				REMARKS REMARQUES
1	6DA–48531–00	BRACKET, REMOTE CONTROL 1 ETRIER 1, COMMANDE A DISTANCE	1	1				
2	95D95–08020	BOLT, FLANGE DEEP RECESS BOULON FIXATION	2	2				
3	6E5–48538–00	CLAMP, CABLE COLLIER	2	2				
4	91690–30010	PIN, SPRING AGRAFFE	2	2				
5	6E5–48344–00	CABLE END, REMOTE CONTROL CHAPE CABLE	1	1				
6	90468–18008	CLIP JONC	1	1				
7	6DA–44176–00	BRACKET SUPPORT	1	1				
8	63P–44117–01	BRACKET SUPPORT	1	1				
9	69J–8259F–00	SWITCH ASSY COMMUTATEUR	1	1				
10	61A–82588–01	PLATE PLAQUE	2	2				
11	97985–04116	SCREW, WITH WASHER VIS, AVEC RONDELLE	4	4				
12	97E95–06550	BOLT, HEXAGON W/W DEEP RECESS VIS HEXAGONAL AVC RONDELLE	2	2				
13	63P–44122–00	BUSHING, SHIFT ROD LEVER DOUILLE, LEVIER D'EMBRAYAGE	1	1				
14	90202–08M20	WASHER, PLATE RONDELLE, PLATE	1	1				
15	90468–18008	CLIP JONC	2	2				
16	6DA–44121–00	LEVER, SHIFT ROD LEVIER, TIGE D'INVERSION	1	1				
17	90386–06M12	BUSH DOUILLE	1	1				
18	6DA–44120–02	HANDLE GEAR SHIFT ASSY LEVIER D'EMBRAYAGE	1					X(25.3") X(25.3")
	6DA–44120–12	HANDLE GEAR SHIFT ASSY LEVIER D'EMBRAYAGE		1				L(20.3") L(20.3")
19	93210–09165	O-RING JOINT TORIQUE	1	1				
20	90386–16M66	BUSH DOUILLE	1	1				
21	90202–16061	WASHER, PLATE RONDELLE, PLATE	2	2				
22	93410–16006	CIRCLIP CIRCLIP	1	1				
23	63P–44118–00	BRACKET SUPPORT	1	1				
24	97E75–06535	BOLT, HEXAGON W/W DEEP RECESS VIS HEXAGONAL AVC RONDELLE	1	1				
25	91690–30010	PIN, SPRING AGRAFFE	1	1				
26	93501–04M02	BALL BILLE	1	1				

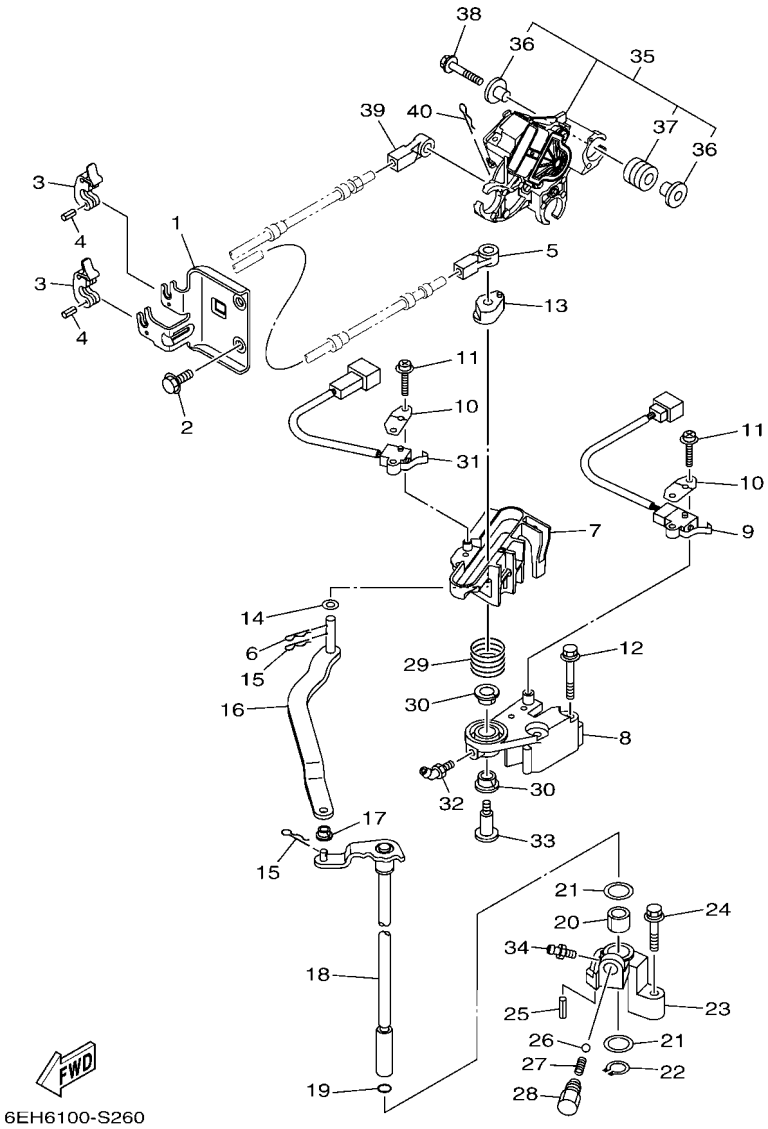

FIG. 26 CONTROL COMMANDE

REF. NO.	PART NO. N° PIECES	DESCRIPTION DESCRIPTION	XA	LA				REMARKS REMARQUES
27	90501–12082	SPRING, COMPRESSION RESSORT, COMPRESSION	1	1				
28	648–42715–00	BUSHING 2 COUSSINET 2	1	1				
29	90508–20M31	SPRING, TORSION RESSORT, TORSION	1	1				
30	90386–12069	BUSH DOUILLE	2	2				
31	60V–8259F–01	SWITCH ASSY COMMUTATEUR	1	1				
32	93700–06M01	NIPPLE, GREASE PION	1	1				
33	90109–08019	BOLT BOULON	1	1				
34	93700–06M03	NIPPLE, GREASE PION	1	1				
35	6DA–8A410–02	SENSOR UNIT UNITE DE CAPTEUR	1	1				
36	69J–13716–00	.COLLAR .COLLERETTE	6	6				
37	6CB–13593–00	.DAMPER .AMORTISSEUR	3	3				
38	90119–06297	BOLT, WITH WASHER BOULON, AVEC RONDELLE	3	3				
39	6E5–48344–00	CABLE END, REMOTE CONTROL CHAPE CABLE	1	1				
40	90468–18008	CLIP JONC	1	1				

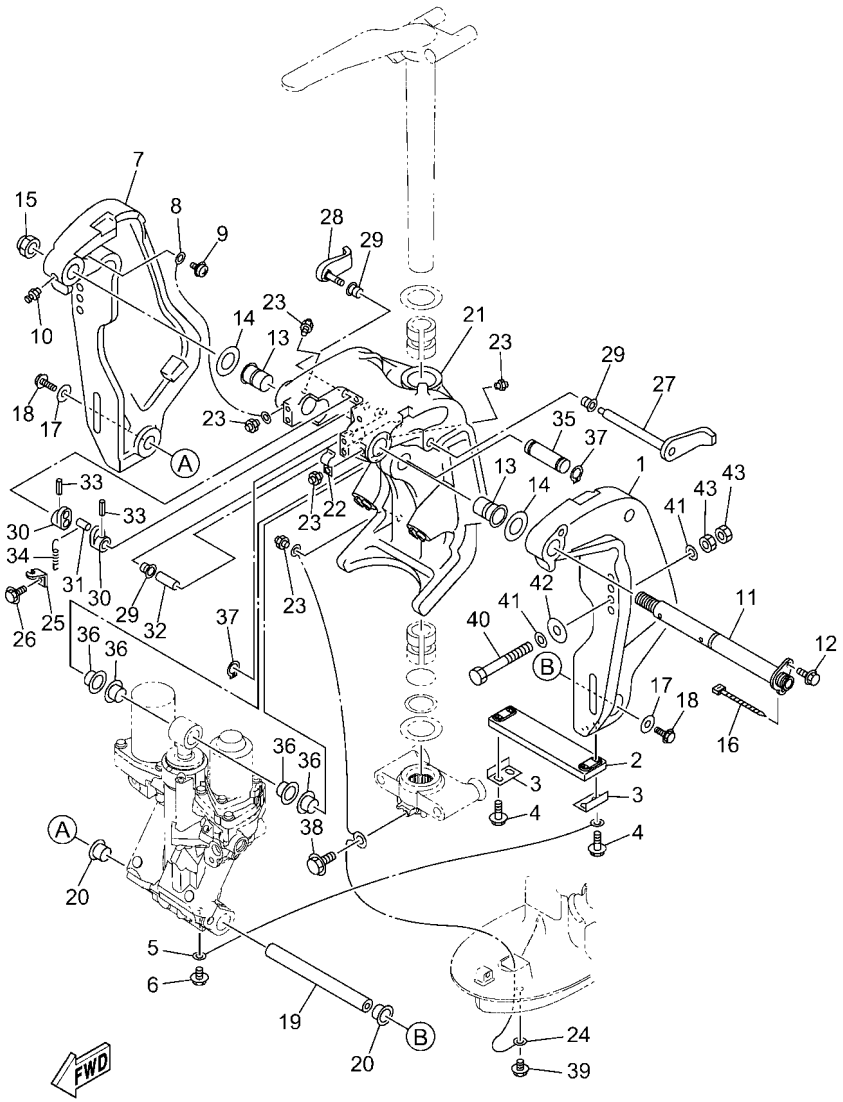

6EHB100-X270

FIG. 27 BRACKET 1 — SUPPORT 1

REF. NO.	PART NO. N° PIECES	DESCRIPTION DESCRIPTION	XA	LA				REMARKS REMARQUES
1	64E–43111–02–8D	BRACKET, CLAMP 1 PRESSE 1	1					
2	6AW–45251–00	ANODE ANODE	1					
3	6G5–44526–00	PLATE PLAQUE	2					
4	97E95–06530	BOLT, HEXAGON W/W DEEP RECESS VIS HEXAGONAL AVC RONDELLE	4					
5	6E5–82148–00	WIRE, LEAD 4 FIL 4	1					
6	97E95–06510	BOLT, HEXAGON W/W DEEP RECESS VIS HEXAGONAL AVC RONDELLE	1					
7	64E–43112–02–8D	BRACKET, CLAMP 2 PRESSE 2	1					
8	6E5–82148–00	WIRE, LEAD 4 FIL 4	1					
9	97985–06212	SCREW, WITH WASHER VIS, AVEC RONDELLE	1					
10	93700–06002	NIPPLE, GREASE PION	1					
11	64E–43131–30	BOLT, CLAMP BRACKET BOULON, PRESSE	1					
12	97E95–08520	BOLT, HEXAGON W/W DEEP RECESS VIS HEXAGONAL AVC RONDELLE	1					
13	90386–25M31	BUSH DOUILLE	2					
14	90201–26M59	WASHER, PLATE RONDELLE, PLATE	2					
15	90185–22M11	NUT, SELF-LOCKING ECROU,AUTO-BLOQUANT	1					
16	90465–11M10	CLAMP BRIDE	1					
17	90201–10060	WASHER, PLATE RONDELLE, PLATE	2					
18	90119–10054	BOLT, WITH WASHER BOULON, AVEC RONDELLE	2					
19	6BC–43818–00	PIN, LOWER SHOCK MOUNT AXE, INFERIEUR AMORTISSEUR	1					
20	90386–22M98	BUSH DOUILLE	2					
21	64E–43311–20–8D	BRACKET, SWIVEL 1 SUPPORT, PIVOT 1	1					
22	90465–08M63	CLAMP BRIDE	1					
23	93700–06002	NIPPLE, GREASE PION	5					
24	6DA–82149–00	WIRE, LEAD 3 FIL 3	1					
25	6G5–43144–00	HOOK, SPRING CROCHET	1					
26	97E95–06512	BOLT, HEXAGON W/W DEEP RECESS VIS HEXAGONAL AVC RONDELLE	1					
27	6G5–43181–02	LEVER, TILT STOP 1 LEVIER VERROUILLAGE RELEVAGE 1	1					

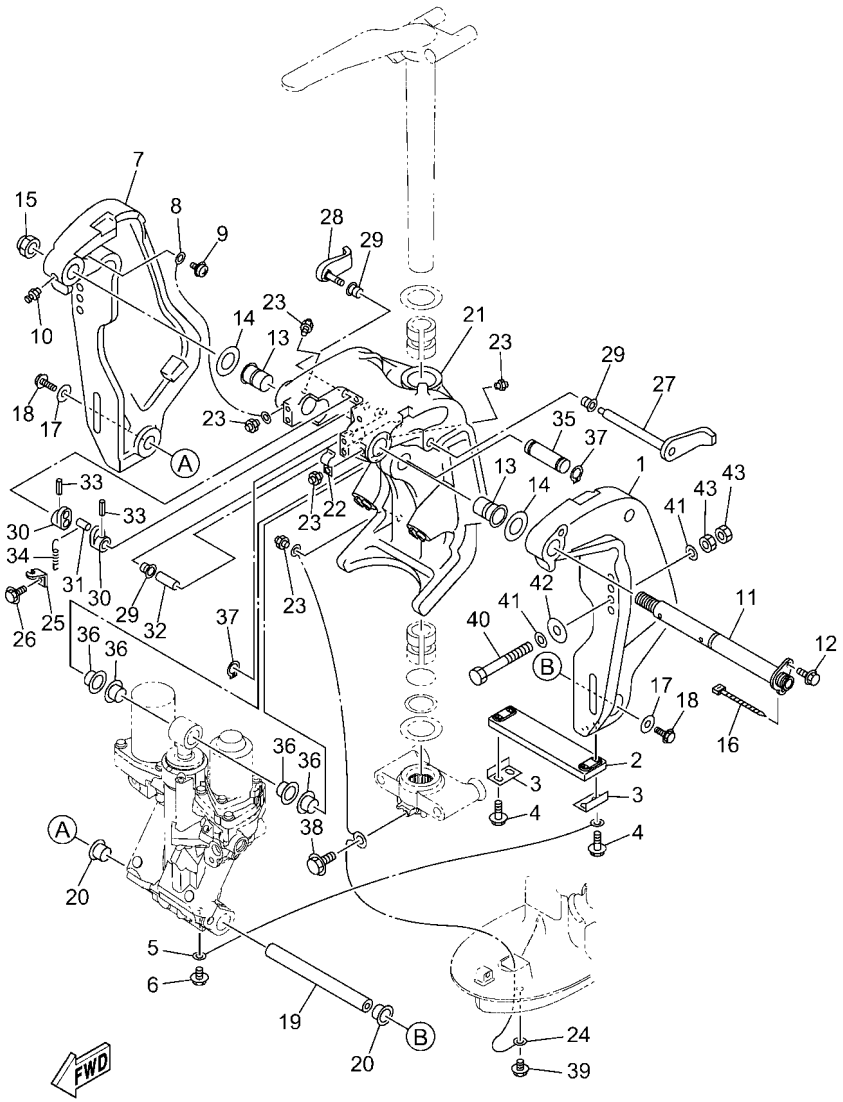

6EHB100-X270

FIG. 27 BRACKET 1 — SUPPORT 1

REF. NO.	PART NO. N° PIECES	DESCRIPTION DESCRIPTION	XA	LA				REMARKS REMARQUES
28	6G5–43185–02	LEVER, TILT STOP 2 LEVIER VERROUILLAGE RELEVAGE 2	1					
29	90386–10M16	BUSH DOUILLE	3					
30	6G5–43148–00	COLLAR, DISTANCE ENTRETOISE	2					
31	90249–06M19	PIN GOUPILLE	1					
32	90387–10M05	COLLAR COLLERETTE	1					
33	91690–30020	PIN, SPRING AGRAFFE	2					
34	90506–16003	SPRING, TENSION RESSORT, TENSION	1					
35	64E–43126–10	PIN, UPPER SHOCK MOUNT AXE, SUPERIEUR AMORTISSEUR	1					
36	90386–22M98	BUSH DOUILLE	4					
37	93410–22M11	CIRCLIP CIRCLIP	2					
38	95D95–06010	BOLT, FLANGE DEEP RECESS BOULON FIXATION	1					
39	95D95–06010	BOLT, FLANGE DEEP RECESS BOULON FIXATION	1					
40	90101–12066	BOLT (L:150MM) BOULON (L:150MM)	2					UR UR
	90101–12065	BOLT (L:130MM) BOULON (L:130MM)	2					UR UR
41	90201–13M01	WASHER, PLATE RONDELLE, PLATE	8					
42	90201–12426	WASHER, PLATE RONDELLE, PLATE	4					
43	95380–12600	NUT ECROU	8					

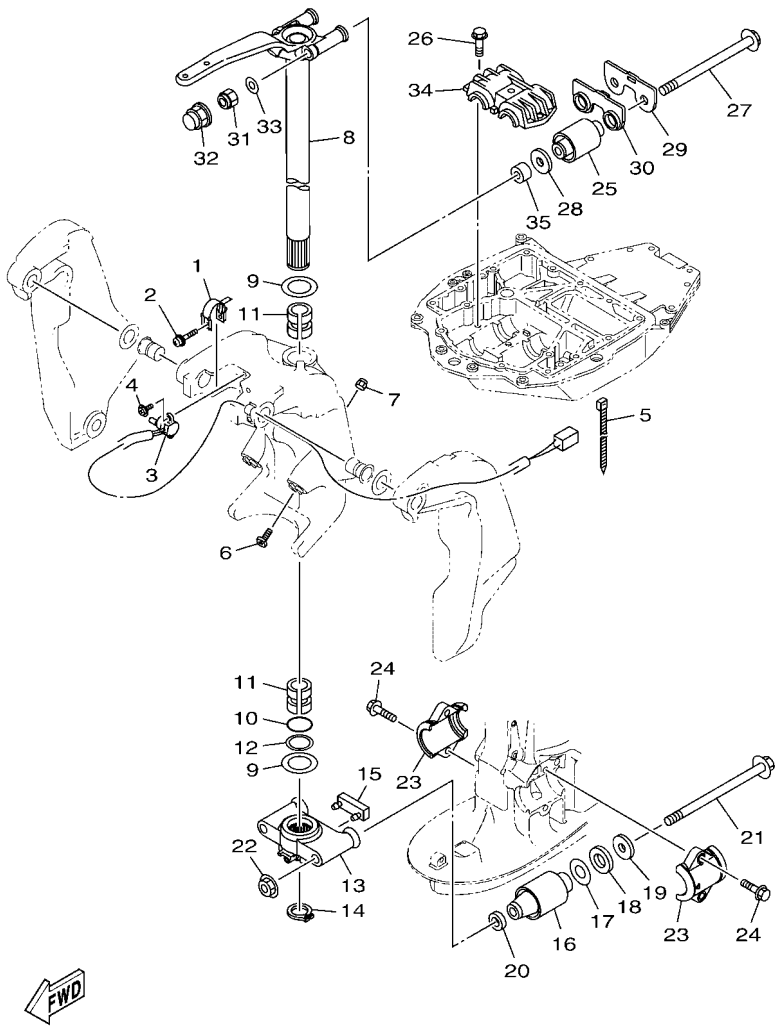

6EHA100-W280

FIG. 28 BRACKET 2 — SUPPORT 2

REF. NO.	PART NO. N° PIECES	DESCRIPTION DESCRIPTION	XA	LA				REMARKS REMARQUES
1	64E–43139–11	CAM, TRIM SENDER VILEBREQUIN TRUM	1					
2	90159–05059	SCREW, WITH WASHER VIS, AVEC RONDELLE	1					
3	67H–83672–02	TRIM SENDER INCLINER RACCORD	1					
4	97985–06216	SCREW, WITH WASHER VIS, AVEC RONDELLE	2					
5	90465–11M10	CLAMP BRIDE	3					
6	61A–43376–00	BOLT, THRUST RECEIVER BOULON	2					
7	95780–10300	NUT, FLANGE ECROU	2					
8	6DA–42510–00–8D	STEERING BRACKET ASSY DIRECTION SUPPORT (ENS.)	1					
9	90201–38M60	WASHER, PLATE RONDELLE, PLATE	2					
10	93210–37MH7	O-RING JOINT TORIQUE	1					
11	90386–38M32	BUSH DOUILLE	2					
12	90202–40M47	WASHER, PLATE RONDELLE, PLATE	1					
13	6DA–44551–00–CA	HOUSING, LOWER MOUNT RUBBER 1 BOITIER, SILENT-BLOC INFERIEUR	1					
14	93410–37M04	CIRCLIP CIRCLIP	1					
15	6DA–44575–00	DAMPER, LOWER MOUNT RUBBER SILENT-BLOC, INFERIEUR	1					
16	63P–44555–00	MOUNT DAMPER, LOWER SIDE SILENT-BLOC, INFERIEUR LATERAL	2					
17	90201–35008	WASHER, PLATE RONDELLE, PLATE	2					
18	90202–32M19	WASHER, PLATE RONDELLE, PLATE	2					
19	90201–16M55	WASHER, PLATE RONDELLE, PLATE	2					
20	90201–15M58	WASHER, PLATE RONDELLE, PLATE	2					
21	90105–14012	BOLT, FLANGE BOULON, A COLLERETTE	2					
22	95604–14200	NUT, SELF-LOCKING ECROU, AUTO-BLOCANT	2					
23	6DA–44552–00–CA	HOUSING, LOWER MOUNT RUBBER 2 BOITIER, SILENT-BLOC INFERIEUR	2					
24	90119–10058	BOLT, WITH WASHER BOULON, AVEC RONDELLE	4					
25	6DA–44514–00	MOUNT DAMPER, UPPER SIDE SILENT-BLOC, SUPERIEUR LATERAL	2					
26	90119–10024	BOLT, WITH WASHER BOULON, AVEC RONDELLE	3					
27	90105–14009	BOLT, FLANGE BOULON, A COLLERETTE	2					

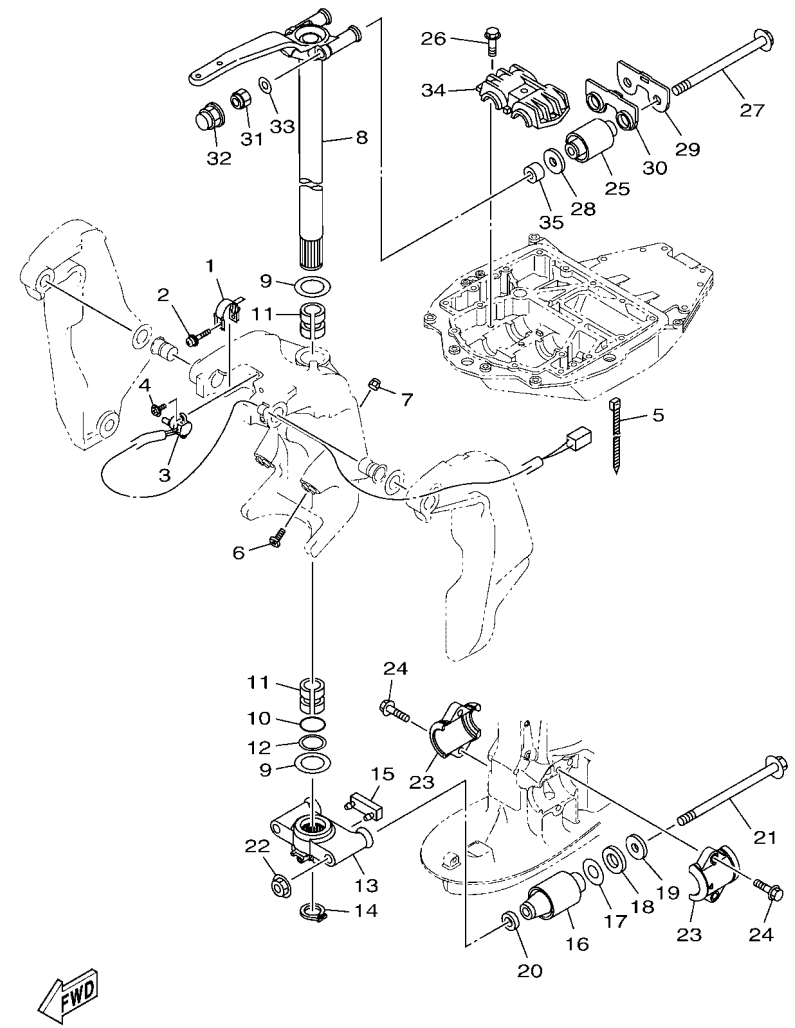

6EHA100-W280

FIG. 28 BRACKET 2 — SUPPORT 2

REF. NO.	PART NO. N° PIECES	DESCRIPTION DESCRIPTION	XA	LA				REMARKS REMARQUES
28	90201–16M01	WASHER, PLATE RONDELLE, PLATE	2					
29	6DA–44526–00	PLATE PLAQUE	1					
30	6DA–44532–00	STOPPER, UPPER MOUNT PLAQUETTE	1					
31	90185–14M00	NUT, SELF-LOCKING ECROU,AUTO-BLOQUANT	2					
32	6DA–44194–00	CAP CAPUCHON	2					
33	92995–14600	WASHER RONDELLE	2					
34	63P–44511–00	COVER, UPPER MOUNT COUVERCLE, SUSPENSION SUPERIEU	1					
35	90387–14004	COLLAR COLLERETTE	2					

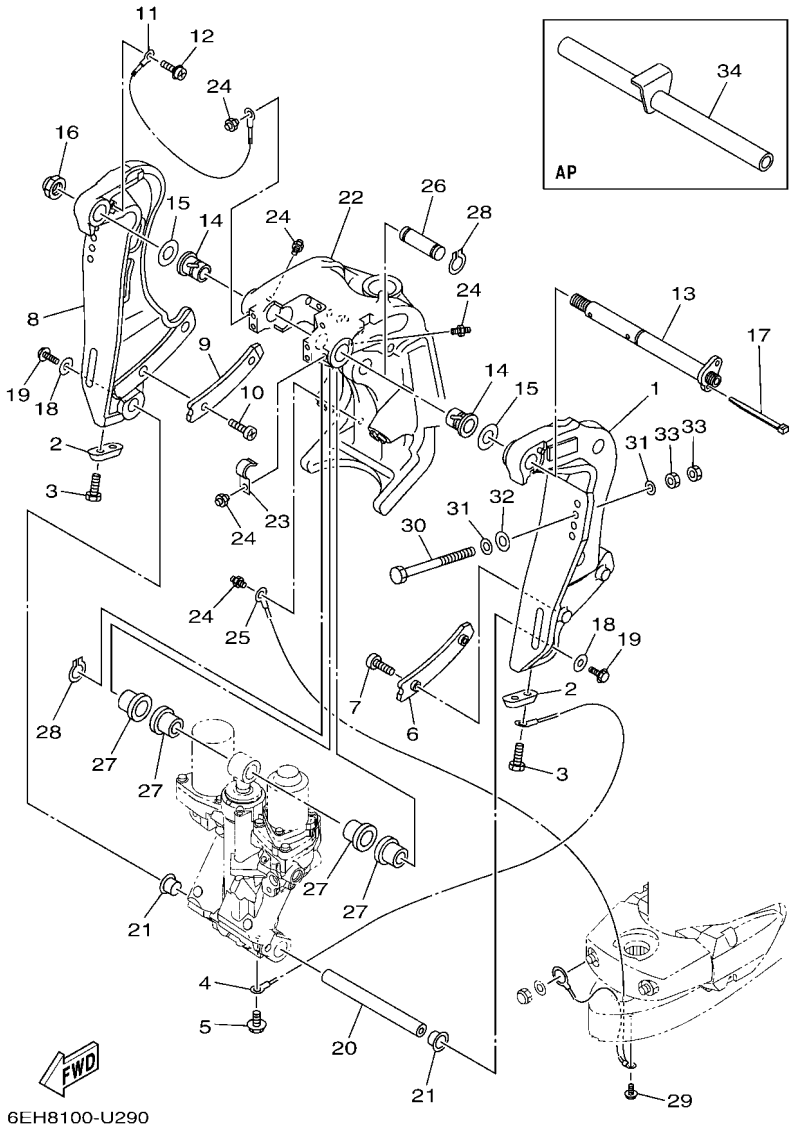

FIG. 29 BRACKET 3 — SUPPORT 3

REF. NO.	PART NO. N° PIECES	DESCRIPTION DESCRIPTION	XA	LA				REMARKS REMARQUES
1	6CB–43111–10–8D	BRACKET, CLAMP 1 PRESSE 1		1				
2	65W–45251–00	ANODE ANODE		2				
3	90101–06020	BOLT BOULON		4				
4	6E5–82148–00	WIRE, LEAD 4 FIL 4		1				
5	97E95–06510	BOLT, HEXAGON W/W DEEP RECESS VIS HEXAGONAL AVC RONDELLE		1				
6	61A–43132–01	WASHER, FRICTION RONDELLE, FRICTION		1				
7	97885–06010	SCREW, PAN HEAD VIS, A ENCOCHE		2				
8	6CB–43112–10–8D	BRACKET, CLAMP 2 PRESSE 2		1				
9	61A–43133–01	WASHER,FRICTION RONDELLE		1				
10	97885–06010	SCREW, PAN HEAD VIS, A ENCOCHE		2				
11	6E5–82148–00	WIRE, LEAD 4 FIL 4		1				
12	97985–06212	SCREW, WITH WASHER VIS, AVEC RONDELLE		1				
13	64E–43131–30	BOLT, CLAMP BRACKET BOULON, PRESSE		1				
14	90386–25M31	BUSH DOUILLE		2				
15	90201–26M59	WASHER, PLATE RONDELLE, PLATE		2				
16	90185–22M11	NUT, SELF-LOCKING ECROU,AUTO-BLOQUANT		1				
17	90465–11M10	CLAMP BRIDE		1				
18	90201–10060	WASHER, PLATE RONDELLE, PLATE		2				
19	90119–10054	BOLT, WITH WASHER BOULON, AVEC RONDELLE		2				
20	6BC–43818–00	PIN, LOWER SHOCK MOUNT AXE, INFERIEUR AMORTISSEUR		1				
21	90386–22M98	BUSH DOUILLE		2				
22	64E–43311–10–8D	BRACKET, SWIVEL 1 SUPPORT, PIVOT 1		1				
23	90465–08M63	CLAMP BRIDE		1				
24	93700–06002	NIPPLE, GREASE PION		5				
25	66K–82149–00	WIRE, LEAD 3 FIL 3		1				
26	64E–43126–10	PIN, UPPER SHOCK MOUNT AXE, SUPERIEUR AMORTISSEUR		1				
27	90386–22M98	BUSH DOUILLE		4				

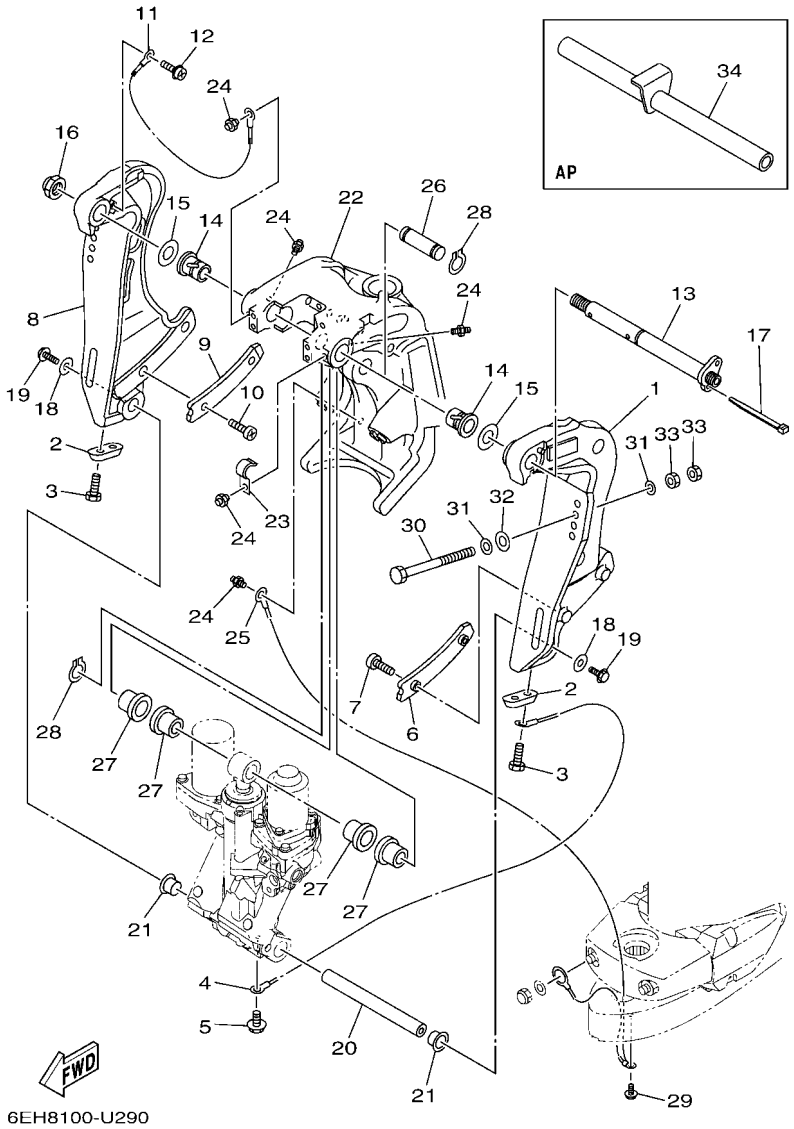

FIG. 29 BRACKET 3 — SUPPORT 3

REF. NO.	PART NO. N° PIECES	DESCRIPTION DESCRIPTION	XA	LA				REMARKS REMARQUES
28	93410–22M11	CIRCLIP CIRCLIP		2				
29	95D95–06010	BOLT, FLANGE DEEP RECESS BOULON FIXATION		1				
30	90101–12066	BOLT (L:150MM) BOULON (L:150MM)		2				UR UR
	90101–12065	BOLT (L:130MM) BOULON (L:130MM)		4				UR UR
31	90201–13M01	WASHER, PLATE RONDELLE, PLATE		8				
32	90201–12426	WASHER, PLATE RONDELLE, PLATE		4				
33	95380–12600	NUT ECROU		8				
34	6CB–43611–00	SHAFT, TILT LOCK AXE, VERROUILLAGE MARCHE AR		1				AP AP

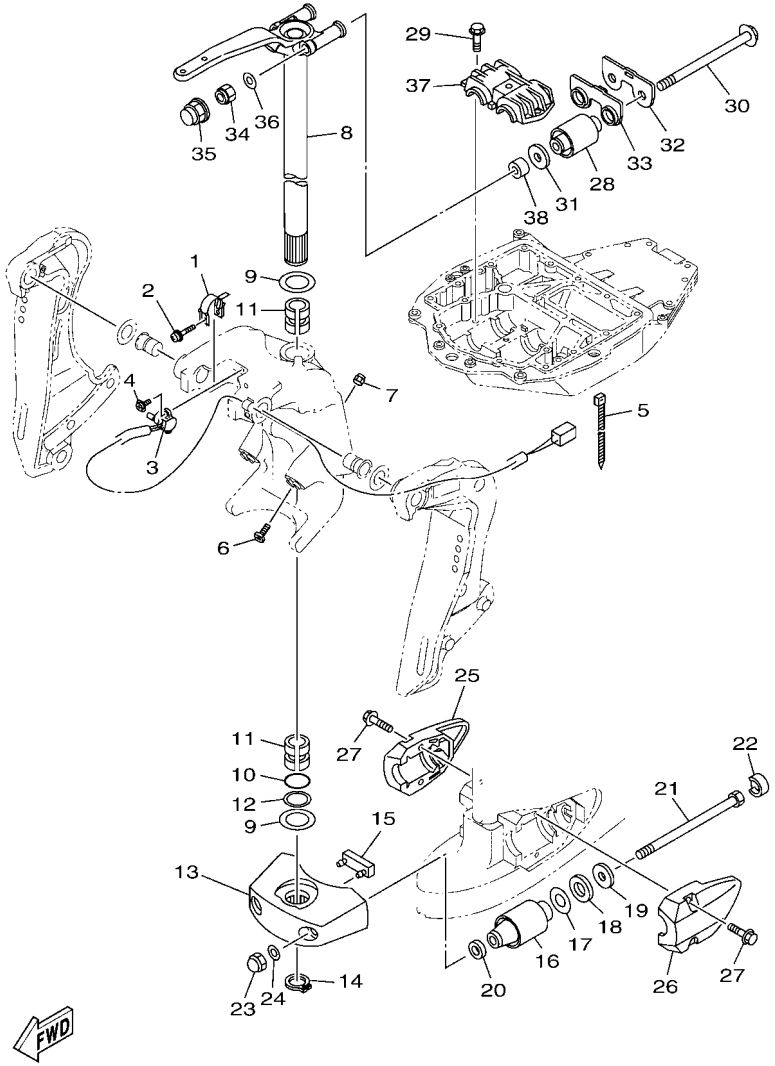

6EHA100-W300

FIG. 30 BRACKET 4 — SUPPORT 4

REF. NO.	PART NO. N° PIECES	DESCRIPTION DESCRIPTION	XA	LA				REMARKS REMARQUES
1	64E–43139–11	CAM, TRIM SENDER VILEBREQUIN TRUM		1				
2	90159–05059	SCREW, WITH WASHER VIS, AVEC RONDELLE		1				
3	67H–83672–02	TRIM SENDER INCLINER RACCORD		1				
4	97985–06216	SCREW, WITH WASHER VIS, AVEC RONDELLE		2				
5	90465–11M10	CLAMP BRIDE		3				
6	61A–43376–00	BOLT, THRUST RECEIVER BOULON		2				
7	95780–10300	NUT, FLANGE ECROU		2				
8	6DA–42510–10–8D	STEERING BRACKET ASSY DIRECTION SUPPORT (ENS.)		1				
9	90201–38M60	WASHER, PLATE RONDELLE, PLATE		2				
10	93210–37MH7	O-RING JOINT TORIQUE		1				
11	90386–38M32	BUSH DOUILLE		2				
12	90202–40M47	WASHER, PLATE RONDELLE, PLATE		1				
13	68V–44551–00–8D	HOUSING, LOWER MOUNT RUBBER 1 BOITIER, SILENT-BLOC INFERIEUR		1				
14	93410–37M04	CIRCLIP CIRCLIP		1				
15	61A–44575–01	DAMPER, LOWER MOUNT RUBBER SILENT-BLOC, INFERIEUR		1				
16	60V–44555–00	MOUNT DAMPER, LOWER SIDE SILENT-BLOC, INFERIEUR LATERAL		2				
17	90201–35008	WASHER, PLATE RONDELLE, PLATE		2				
18	90202–32M19	WASHER, PLATE RONDELLE, PLATE		2				
19	90201–16M55	WASHER, PLATE RONDELLE, PLATE		2				
20	90201–15M58	WASHER, PLATE RONDELLE, PLATE		2				
21	90101–14005	BOLT BOULON		2				
22	69J–44533–00	DAMPER, UPPER MOUNT RUBBER COUVERCLE, SUSPENSION INFERIEU		2				
23	90176–14002	NUT, CAP ECROU, BOUCHON		2				
24	92995–14600	WASHER RONDELLE		2				
25	63P–44553–00–8D	COVER, LOWER MOUNT COUVERCLE, SUSPENSION INFERIEU		1				
26	63P–44556–00–8D	COVER, LOWER MOUNT 2 COUVERCLE,SUSPENSION INFERIEU		1				
27	90119–10058	BOLT, WITH WASHER BOULON, AVEC RONDELLE		4				

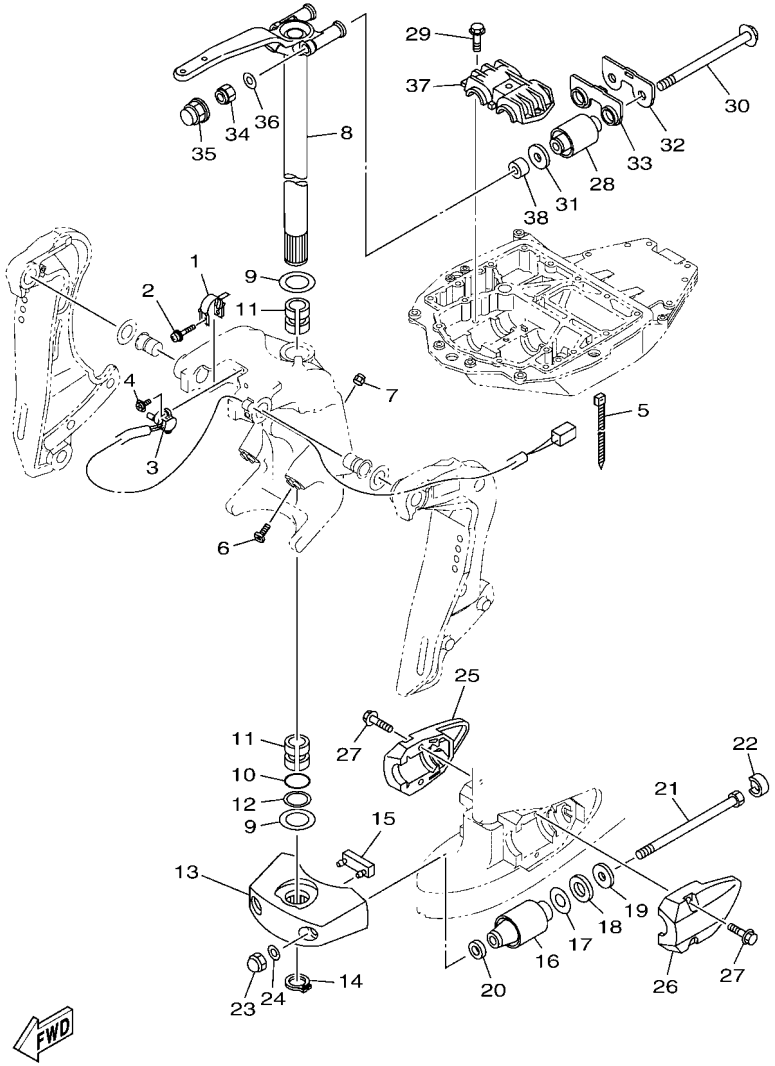

6EHA100-W300

FIG. 30 BRACKET 4 — SUPPORT 4

REF. NO.	PART NO. N° PIECES	DESCRIPTION DESCRIPTION	XA	LA				REMARKS REMARQUES
28	6DA–44514–00	MOUNT DAMPER, UPPER SIDE SILENT-BLOC, SUPERIEUR LATERAL		2				
29	90119–10024	BOLT, WITH WASHER BOULON, AVEC RONDELLE		3				
30	90105–14009	BOLT, FLANGE BOULON, A COLLERETTE		2				
31	90201–16M01	WASHER, PLATE RONDELLE, PLATE		2				
32	6DA–44526–00	PLATE PLAQUE		1				
33	6DA–44532–00	STOPPER, UPPER MOUNT PLAQUETTE		1				
34	90185–14M00	NUT, SELF-LOCKING ECROU,AUTO-BLOQUANT		2				
35	6DA–44194–00	CAP CAPUCHON		2				
36	92995–14600	WASHER RONDELLE		2				
37	63P–44511–00	COVER, UPPER MOUNT COUVERCLE, SUSPENSION SUPERIEU		1				
38	90387–14004	COLLAR COLLERETTE		2				

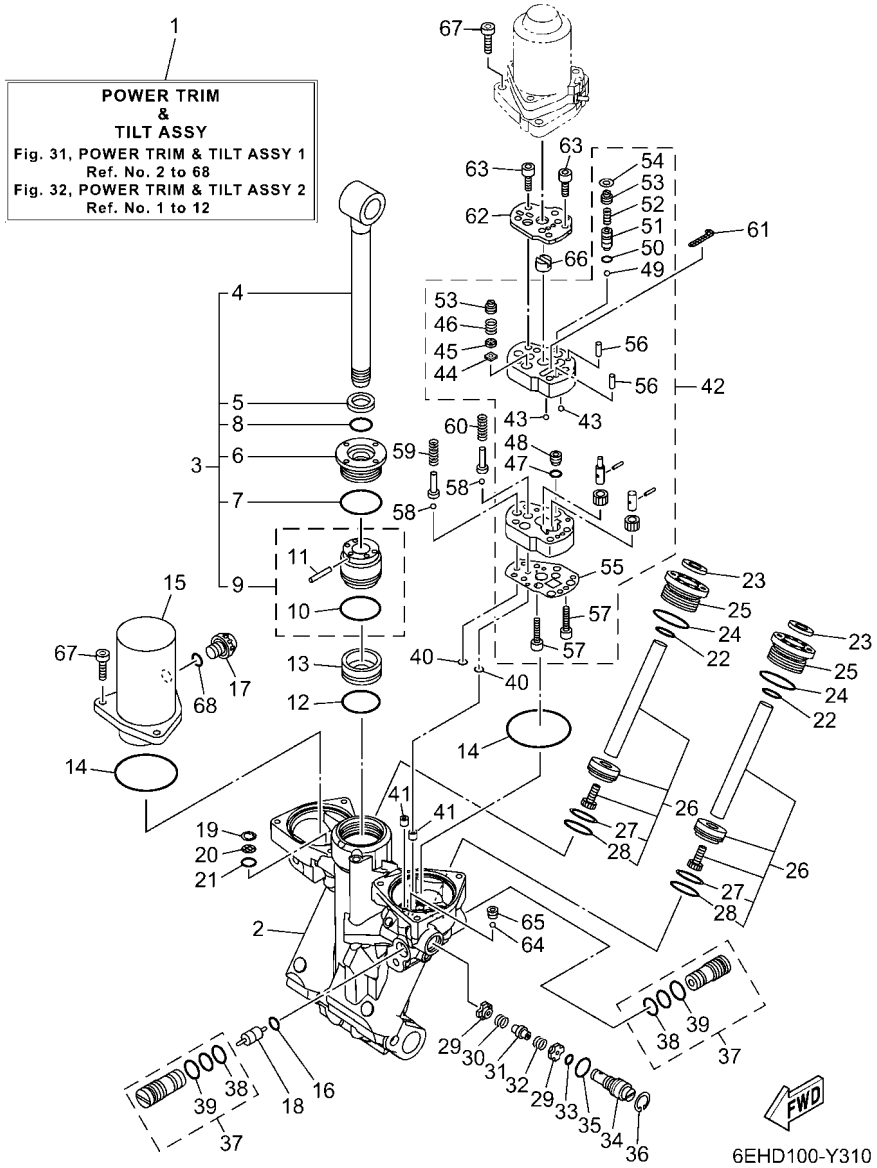

FIG. 31 POWER TRIM & TILT ASSY 1 — PUISSANCE PARER ET INCLINER 1

REF. NO.	PART NO. N° PIECES	DESCRIPTION DESCRIPTION	XA	LA				REMARKS REMARQUES
1	6CB–43800–13	POWER TRIM & TILT ASSY PUISSANCE PARER ET INCLINER (E	1	1				
2	6CB–4380L–13	HOUSING, TRIM & TILT SUB ASSY CARTER	1	1				
3	63P–43810–21	TILT PISTON SUB ASSY INCLINER PISTON AUXILIAIRE(ENS	1	1				
4	63P–43801–10	.ROD .TIGE	1	1				
5	93106–19001	.OIL SEAL .JOINT SPY	1	1				
6	63P–43811–20	.SCREW, CYLINDER END .VIS, CYLINDRE RACCORD	1	1				
7	63P–43861–20	.O-RING .JOINT TORIQUE	1	1				
8	63P–43863–10	.O-RING .JOINT TORIQUE	1	1				
9	63P–4380P–20	.PISTON SUB ASSY .PISTON AUXILIAIRE (ENS.)	1	1				
10	6H1–43862–00	..O-RING ..JOINT TORIQUE	1	1				
11	91609–16010	..PIN, SPRING ..AXE DE RESSORT	1	1				
12	6H1–43862–00	O-RING JOINT TORIQUE	1	1				
13	63P–43814–20	PISTON, FREE PISTON	1	1				
14	93210–68N50	O-RING JOINT TORIQUE	2	2				
15	63P–4382C–20	BODY, RESERVOIR 2 CORPS 2	1	1				
16	93210–09165	O-RING JOINT TORIQUE	1	1				
17	6CJ–43829–20	PLUG, RESERVOIR BOUCHON	1	1				
18	6H1–43841–11	PISTON, SHUTTLE PISTON	1	1				
19	63P–43876–10	RING, SNAP RESSORT	1	1				
20	63P–43816–10	FILTER 1 FILTRE 1	1	1				
21	93210–11N52	O-RING JOINT TORIQUE	1	1				
22	6D8–43863–00	O-RING JOINT TORIQUE	2	2				
23	63P–43812–20	SEAL, DUST JOINT	2	2				
24	63P–43862–10	O-RING JOINT TORIQUE	2	2				
25	63P–43821–21	SCREW, TRIM CYLINDER END VIS	2	2				
26	63P–43820–20	TRIM PISTON SUB ASSY PARER PISTON AUXILIAIRE (ENS.)	2	2				
27	62X–43871–00	.RING, BACK UP .SEGMENT	1	1				

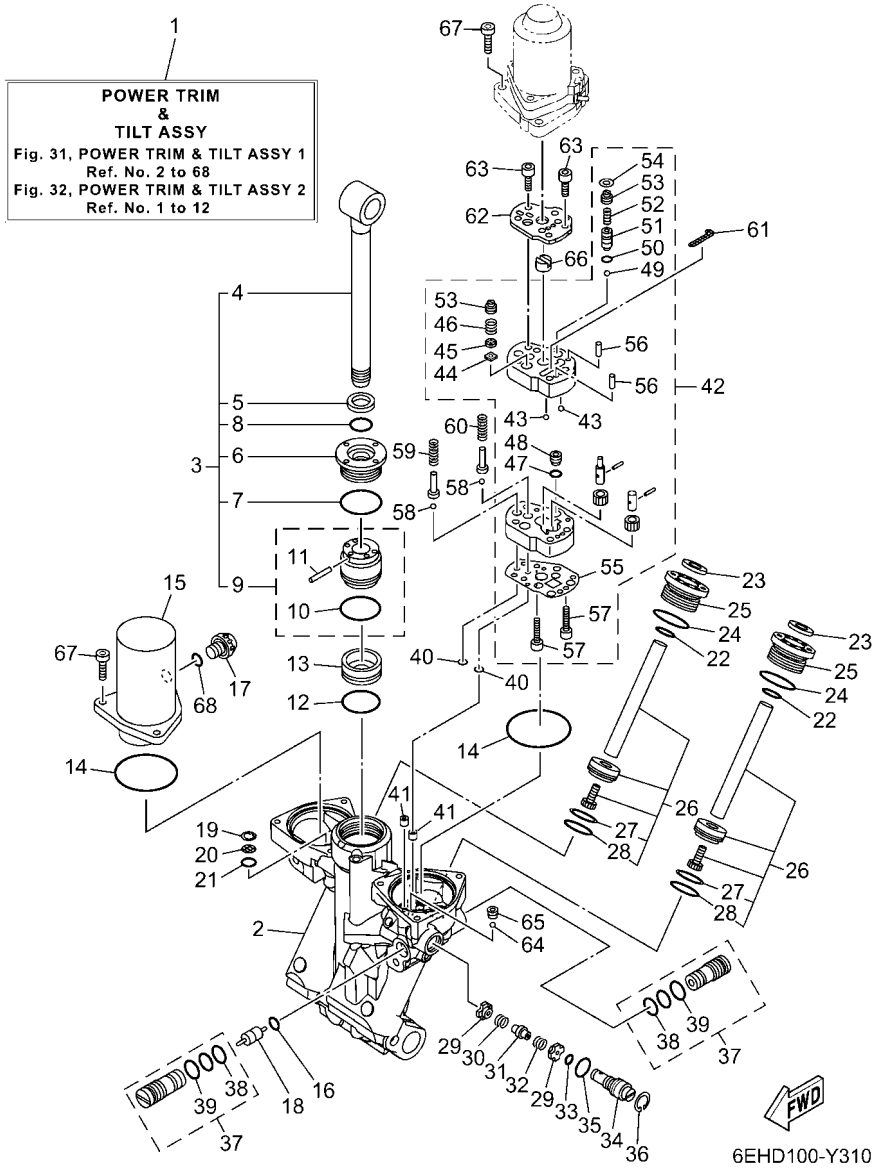

FIG. 31 POWER TRIM & TILT ASSY 1 — PUISSANCE PARER ET INCLINER 1

REF. NO.	PART NO. N° PIECES	DESCRIPTION DESCRIPTION	XA	LA				REMARKS REMARQUES
28	93210–29375	.O-RING .JOINT TORIQUE	1	1				
29	63P–43847–10	SEAT, MANUAL VALVE SIEGE	2	2				
30	63P–43854–10	SPRING, MANUAL RELEASE RESSORT	1	1				
31	63P–4382A–10	ADAPTOR 1 ADAPTEUR 1	1	1				
32	63P–4384H–10	SPRING RESSORT	1	1				
33	69J–4389J–00	O-RING JOINT TORIQUE	1	1				
34	63P–43845–20	SCREW, MANUAL RELEASE VIS	1	1				
35	93210–12327	O-RING JOINT TORIQUE	1	1				
36	61A–43876–01	RING, SNAP RESSORT	1	1				
37	63P–43802–21	VALVE SUB ASSY CLAPET AUXILIAIRE (ENS.)	2	2				
38	93210–12N52	.O-RING .JOINT TORIQUE	1	1				
39	6H1–43866–01	.O-RING .JOINT TORIQUE	1	1				
40	93210–064A5	O-RING JOINT TORIQUE	2	2				
41	63P–4381C–20	FILTER 3 FILTRE 3	2	2				
42	63P–43830–20	GEAR PUMP ASSY POMPE A PIGNON (ENS.)	1	1				
43	93503–16003	.BALL .BILLES	2	2				
44	6H1–4384G–11	.SEAL, RELIEF VALVE .JOINT	1	1				
45	6H1–43844–10	.PIN, VALVE SUPPORT .GOUPILLE	1	1				
46	6H1–43856–10	.SPRING, DOWN RELIEF .RESSORT	1	1				
47	93210–07N51	.O-RING .JOINT TORIQUE	1	1				
48	63P–43851–20	.SEAT, RELIEF VALVE .SIEGE	1	1				
49	93501–08001	.BALL .BILLE	1	1				
50	93210–064A5	.O-RING .JOINT TORIQUE	1	1				
51	63P–43844–20	.PIN, VALVE SUPPORT .GOUPILLE	1	1				
52	69J–43855–00	.SPRING, UP RELIEF .RESSORT	1	1				
53	63P–43843–10	.SCREW, VALVE LOCK .VIS	2	2				
54	63P–43338–10	.WASHER, WAVE .RONDELLE, ONDULEE	1	1				

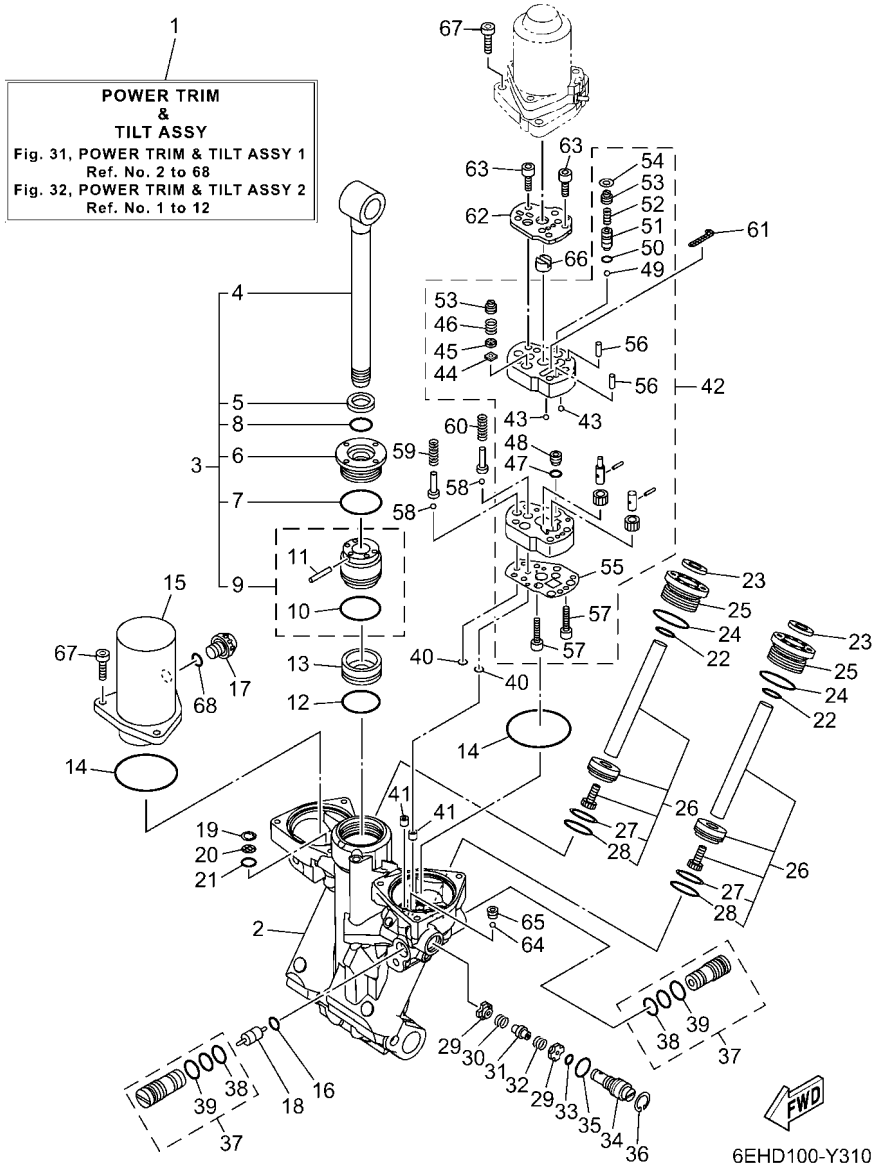

FIG. 31 POWER TRIM & TILT ASSY 1 — PUISSANCE PARER ET INCLINER 1

REF. NO.	PART NO. N° PIECES	DESCRIPTION DESCRIPTION	XA	LA				REMARKS REMARQUES
55	63P–4384G–20	.SEAL, RELIEF VALVE .JOINT	1	1				
56	93604–10011	.PIN, DOWEL .CLAVETTE	2	2				
57	91312–04020	.BOLT, HEXAGON SOCKET HEAD .BOULON, TETE HEXAGONALE CREUSE	2	2				
58	93501–08001	BALL BILLE	2	2				
59	63P–43857–10	SPRING, ABSORBER VALVE RESSORT	1	1				
60	63P–4385H–10	SPRING, SEAL RESSORT	1	1				
61	6CJ–43816–00	FILTER 1 FILTRE 1	1	1				
62	63P–4381J–10	PLATE PLAQUE	1	1				
63	91312–05035	BOLT, HEXAGON SOCKET HEAD BOULON, TETE HEXAGONALE CREUSE	4	4				
64	93505–32038	BALL BILLE	1	1				
65	61A–43878–00	BOLT, SOCKET BOULON	1	1				
66	69J–43831–00	CONNECTOR, SHAFT RACCORD	1	1				
67	91380–06025	BOLT BOULON	6	6				
68	6CJ–43861–10	O-RING JOINT TORIQUE	1	1				

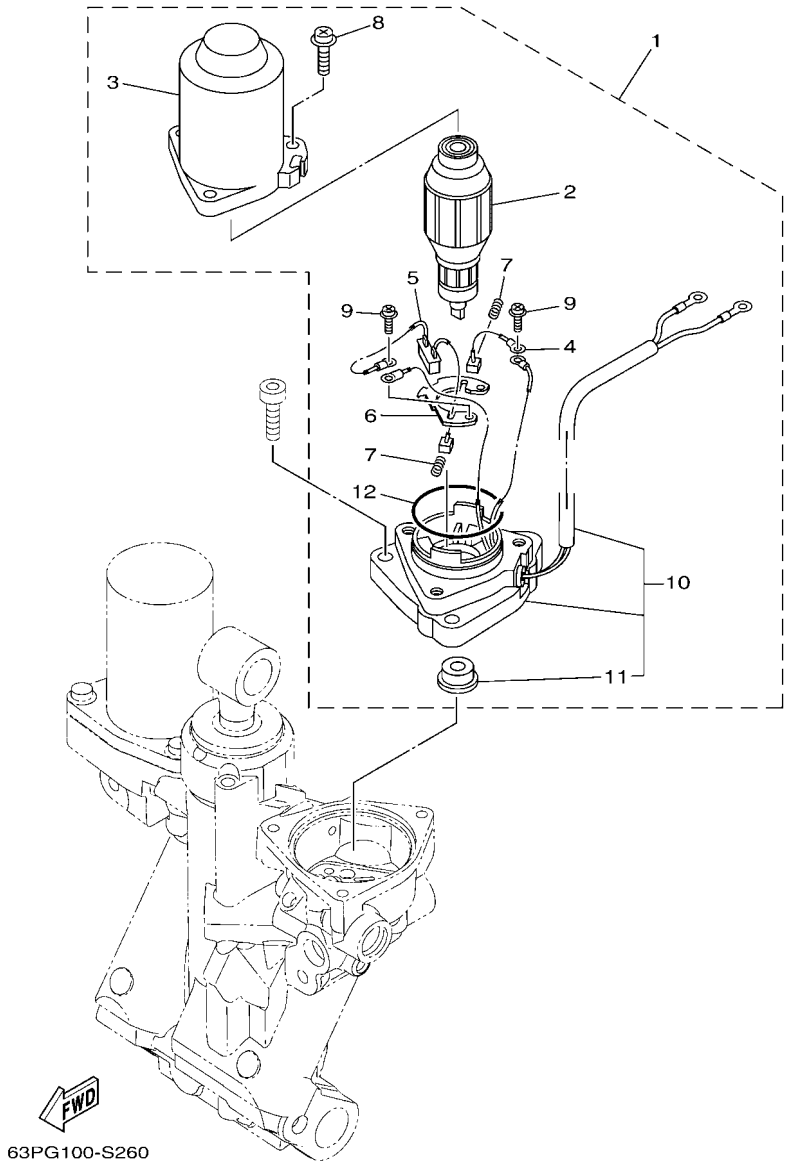

FIG. 32 POWER TRIM & TILT ASSY 2 — PUISSANCE PARER ET INCLINER 2

REF. NO.	PART NO. N° PIECES	DESCRIPTION DESCRIPTION	XA	LA				REMARKS REMARQUES
1	6KW–43880–01	MOTOR ASSY MOTEUR (ENS.)	1	1				
2	6EK–43805–01	.ARMATURE ASSY .INDUIT (ENS.)	1	1				
3	6EK–43804–11	.STATOR ASSY .STATOR (ENS.)	1	1				
4	6EK–43892–00	.BRUSH 2 .BALAI 2	1	1				
5	63P–82181–20	.CIRCUIT BREAKER COMP. .RUPTEUR COMPLET	1	1				
6	6EK–4380F–00	.PLATE, BRUSH HOLDER .PLAQUE	1	1				
7	62X–4386K–00	.SPRING, BRUSH .RESSORT, BALAI	2	2				
8	63P–43879–10	.SCREW, WITH WASHER .VIS, AVEC RONDELLE	3	3				
9	97602–04316	.SCREW, PAN HEAD WITH WASHER .VIS, AVEC RONDELLE	2	2				
10	63P–43881–22	.FRAME, END .BATI	1	1				
11	6EK–43882–00	..OIL SEAL ..JOINT SPI	1	1				
12	6EK–43862–01	.O-RING .JOINT TORIQUE	1	1				

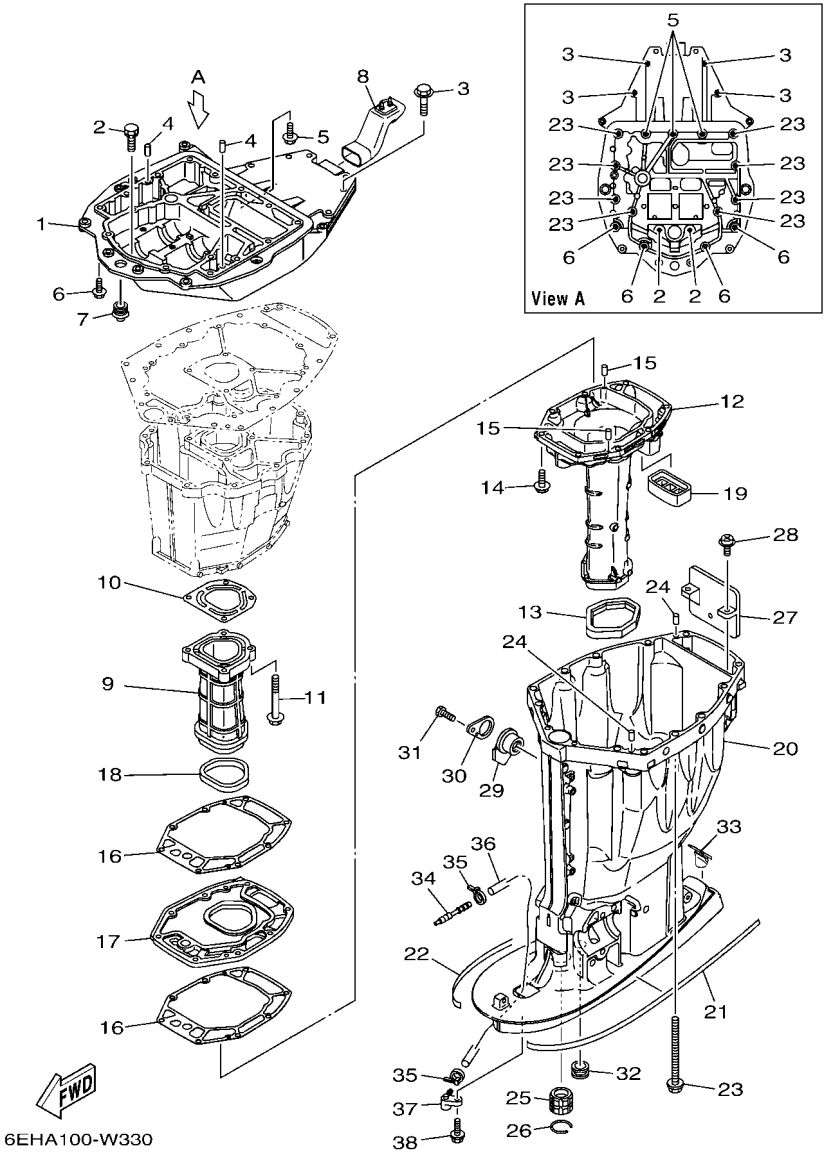

FIG. 33 UPPER CASING FOURREAU

REF. NO.	PART NO. N° PIECES	DESCRIPTION DESCRIPTION	XA	LA				REMARKS REMARQUES
1	63P–41137–06	GUIDE, EXHAUST COLLECTEUR D'ECHAPPEMENT	1	1				
2	90119–08182	BOLT, WITH WASHER BOULON, AVEC RONDELLE	2	2				
3	97E75–10545	BOLT, HEXAGON W/W DEEP RECESS VIS HEXAGONAL AVC RONDELLE	4	4				
4	93608–16M16	PIN, DOWEL AXE	2	2				
5	90119–08189	BOLT, WITH WASHER BOULON, AVEC RONDELLE	3	3				
6	97E75–10535	BOLT, HEXAGON W/W DEEP RECESS VIS HEXAGONAL AVC RONDELLE	4	4				
7	6E5–42724–01	GROMMET PASSE-FIL	1	1				
8	6DA–42769–01	SEAL, RUBBER BOURRELET, CAOUTCHOUC	1	1				
9	63P–41131–02	MANIFOLD, EXT. 1 PIPE D'ECHAPPEMENT	1	1				
10	63P–41133–A0	GASKET, EXHAUST MANIFOLD 1 JOINT, PIPE D'ECHAPPEMENT	1	1				
11	97E75–08560	BOLT, HEXAGON W/W DEEP RECESS VIS HEXAGONAL AVC RONDELLE	4	4				
12	6DA–14711–01	MUFFLER 1 POT D'ECHAPPEMENT 1	1					X(25.3") X(25.3")
	6DA–14711–11	MUFFLER 1 POT D'ECHAPPEMENT 1		1				L(20.3") L(20.3")
13	69J–45123–00	GASKET, MUFFLER JOINT, POT DE DETENTE	1	1				
14	97E75–08535	BOLT, HEXAGON W/W DEEP RECESS VIS HEXAGONAL AVC RONDELLE	8	8				
15	93606–19M23	PIN, DOWEL GOUPILLE	2	2				
16	63P–41134–A1	GASKET, EXHAUST MANIFOLD JOINT, PIPE D'ECHAPPEMENT	2	2				
17	63P–45181–02	PLATE PLAQUETTE	1	1				
18	63P–41138–00	SEAL, EXT. 1 JOINT DE GROUPE 1	1	1				
19	69J–45127–01	SEAL JOINT	1	1				
20	6DA–45111–01–8D	CASING, UPPER FOURREAU	1					X(25.3") X(25.3")
	6DA–45111–10–8D	CASING, UPPER FOURREAU		1				L(20.3") L(20.3")
21	6N9–42791–41	MARK 1 ETIQUETTE 1	1	1				
22	6N9–42792–41	MARK 2 ETIQUETTE 2	1	1				
23	90119–10007	BOLT, WITH WASHER BOULON, AVEC RONDELLE	8	8				
24	93608–16M16	PIN, DOWEL AXE	2	2				
25	6E5–45318–00	BUSHING, DRIVE SHAFT DOUILLE, ARBRE MOTEUR	1	1				

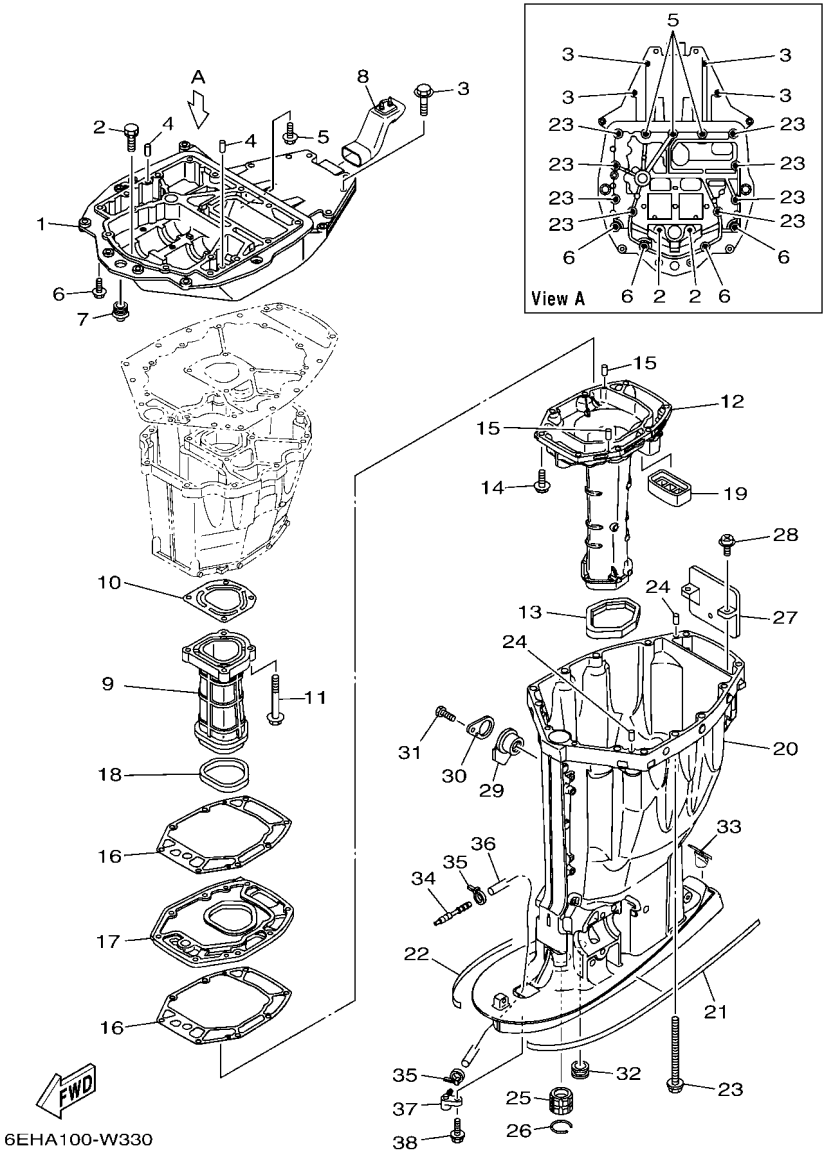

FIG. 33 UPPER CASING FOURREAU

REF. NO.	PART NO. N° PIECES	DESCRIPTION DESCRIPTION	XA	LA				REMARKS REMARQUES
26	93420–36M01	CIRCLIP CIRCLIP, TYPE S	1	1				
27	69J–14624–01	COVER, EXHAUST CACHE D'ECHAPPEMENT	1	1				
28	97980–06216	SCREW, WITH WASHER VIS, AVEC RONDELLE	2	2				
29	6BB–15316–01	DAMPER 1 AMORTISSEUR 1	1					X(25.3") X(25.3")
30	6BB–45152–01	COVER, UPPER CASING 2 CAPUCHON FOURREAU	1					X(25.3") X(25.3")
31	97D95–06012	BOLT, HEXAGON DEEP RECESS VIS HEXAGONAL	1					X(25.3") X(25.3")
32	6E5–44366–01	DAMPER, WATER SEAL 2 JOINT, TUBE D'EAU 2	1	1				
33	6DA–45155–01	CAP CAPUCHON	1					X(25.3") X(25.3")
	6C5–45155–02	CAP CAPUCHON		1				L(20.3") L(20.3")
34	6E5–83558–00	END, NIPPLE RACCORD DE NIPPLE	1	1				
35	90465–11M10	CLAMP BRIDE	2	2				
36	90445–07018	HOSE (L1400) DURITE (L1400)	1					X(25.3") X(25.3")
	90445–07010	HOSE (L1330) DURITE (L1330)		1				L(20.3") L(20.3")
37	63P–45379–00	NIPPLE, HOSE RACCORD D'ESSENCE	1	1				
38	90119–06287	BOLT, WITH WASHER BOULON, AVEC RONDELLE	1	1				

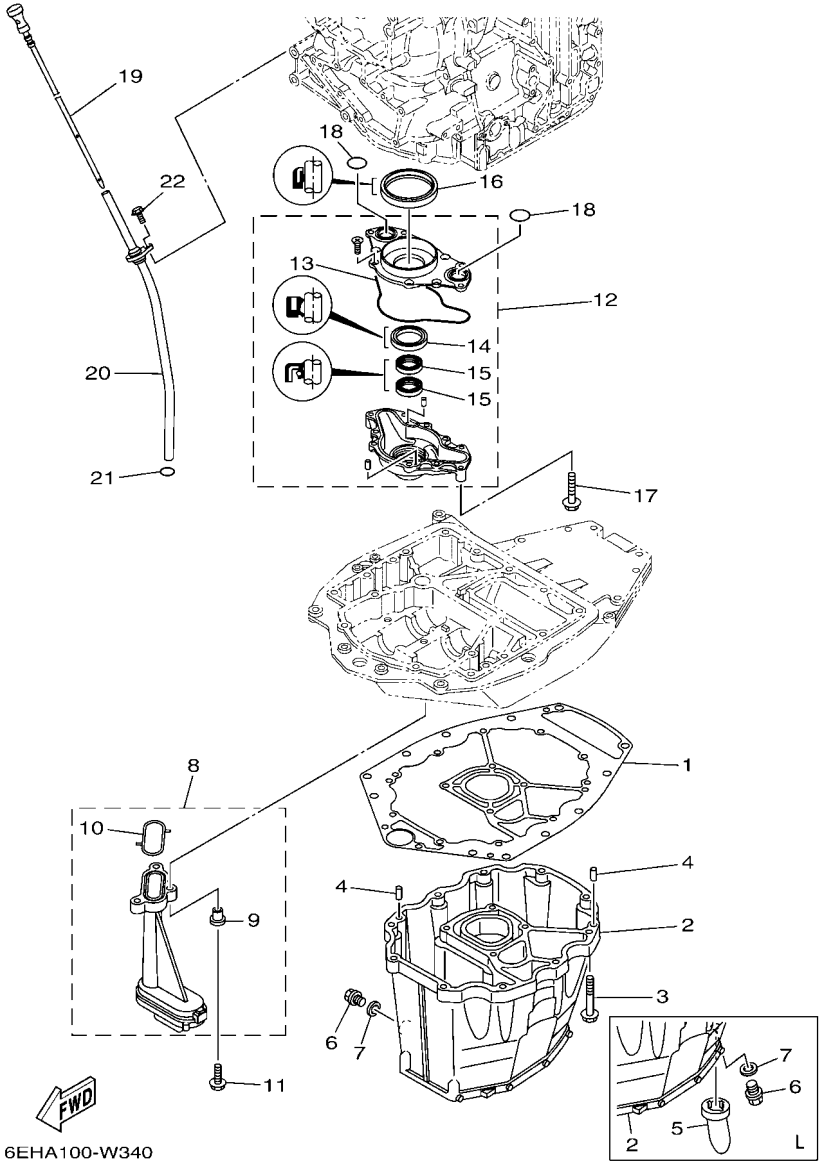

FIG. 34 OIL PAN — VENTILATEUR D'HUILE

REF. NO.	PART NO. N° PIECES	DESCRIPTION DESCRIPTION	XA	LA				REMARKS REMARQUES
1	63P–15312–02	GASKET, OIL PAN JOINT DE VENTILATEUR D'HUILE	1	1				
2	6DA–15311–01	OIL PAN VENTILATEUR D'HUILE	1					X(25.3") X(25.3")
	63P–15311–03	OIL PAN VENTILATEUR D'HUILE		1				L(20.3") L(20.3")
3	97E75–08535	BOLT, HEXAGON W/W DEEP RECESS VIS HEXAGONAL AVC RONDELLE	10	10				
4	93608–16M16	PIN, DOWEL AXE	2	2				
5	63P–15316–01	DAMPER 1 AMORTISSEUR 1		1				L(20.3") L(20.3")
6	90340–14M06	PLUG, STRAIGHT SCREW PLOT, FILETE DROIT	1	1				
7	90430–14M09	GASKET JOINT	1	1				
8	63P–13411–00	STRAINER, OIL FILTRE, HUILE	1	1				
9	90387–06263	.COLLAR .COLLERETTE	3	3				
10	63P–13415–00	.SEAL, OIL STRAINER .JOINT, FILTRE A HUILE	1	1				
11	95812–06025	BOLT, FLANGE BOULON	3	3				
12	6DA–13300–00	OIL PUMP ASSY POMPE A HUILE COMPLETE	1	1				
13	6DA–13329–00	.GASKET, PUMP COVER .JOINT, COUVERCLE DE POMPE	1	1				
14	6AW–13119–00	.OIL SEAL .JOINT SPY	1	1				
15	69J–13631–00	.OIL SEAL .JOINT SPY	2	2				
16	6CB–11355–00	SEAL, CYLINDER 1 JOINT, SPY CYLINDRE	1	1				
17	97E75–06540	BOLT, HEXAGON W/W DEEP RECESS VIS HEXAGONAL AVC RONDELLE	4	4				
18	93210–25552	O-RING JOINT TORIQUE	2	2				
19	6DA–15362–00	PLUG, OIL LEVEL PLOT, NIVEAU D'HUILE	1	1				
20	6DA–15377–00	GUIDE, INLET GUIDE D'ADMISSION	1	1				
21	93210–19MJ3	O-RING JOINT TORIQUE	1	1				
22	95D95–06016	BOLT, FLANGE DEEP RECESS BOULON FIXATION	1	1				

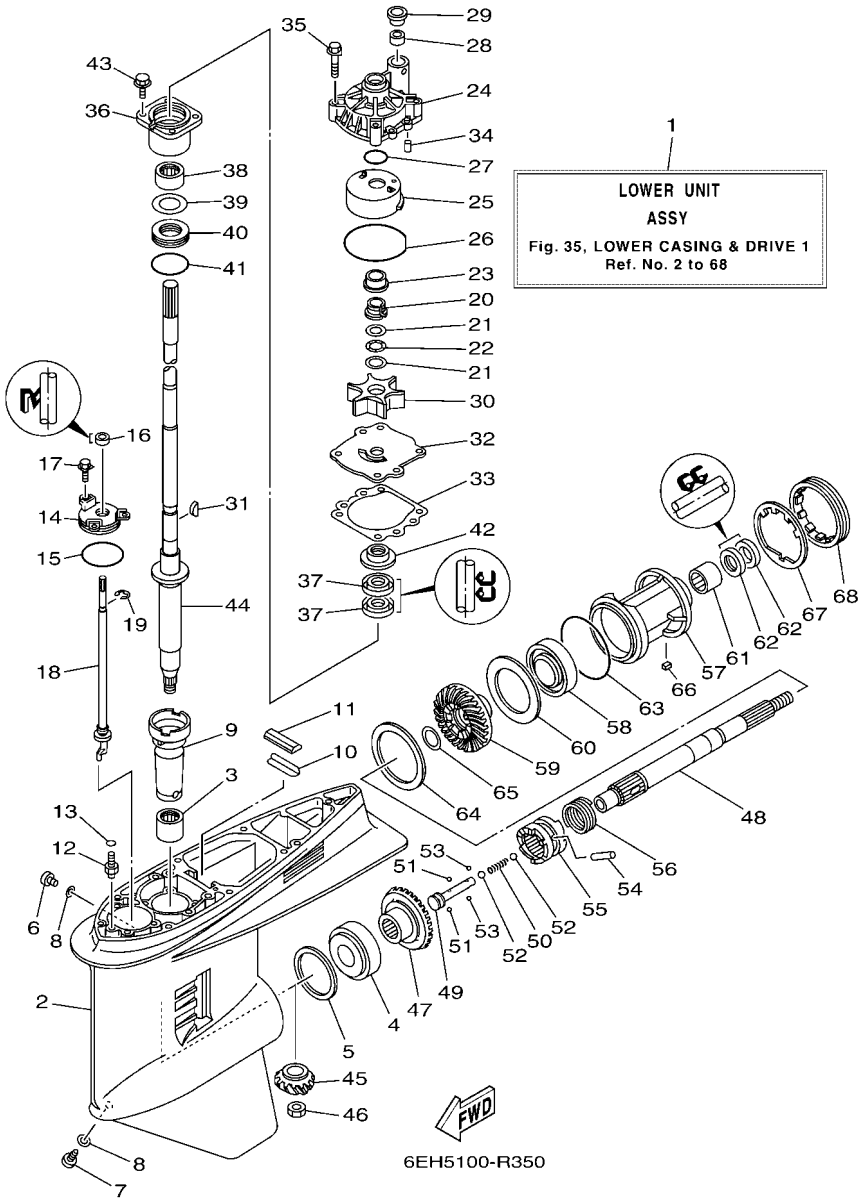

FIG. 35 LOWER CASING & DRIVE 1 — BOITIER D'HELICE TRANSMISSION1

REF. NO.	PART NO. N° PIECES	DESCRIPTION DESCRIPTION	XA	LA				REMARKS REMARQUES
1	6FH–45300–13–NA	LOWER UNIT ASSY UNITE INFERIEURE (ENS.)	1					X(25.3") X(25.3")
	6FH–45300–03–NA	LOWER UNIT ASSY UNITE INFERIEURE (ENS.)		1				L(20.3") L(20.3")
2	6J9–45301–07–NA	CASING, LOWER BEQUILLE	1	1				
3	93311–928U5	BEARING ROULEMENT	1	1				
4	93332–000V3	BEARING ROULEMENT	1	1				
5	6G5–45567–01	SHIM (T:0.10MM) CALE (T:0.10MM)	1	1				UR UR
	6G5–45567–10	SHIM (T:0.12MM) CALE (T:0.12MM)	1	1				UR UR
	6G5–45567–20	SHIM (T:0.15MM) CALE (T:0.15MM)	1	1				UR UR
	6G5–45567–30	SHIM (T:0.18MM) CALE (T:0.18MM)	1	1				UR UR
	6G5–45567–40	SHIM (T:0.30MM) CALE (T:0.30MM)	1	1				UR UR
	6G5–45567–50	SHIM (T:0.40MM) CALE (T:0.40MM)	1	1				UR UR
	6G5–45567–60	SHIM (T:0.50MM) CALE (T:0.50MM)	1	1				UR UR
6	90340–08002	PLUG, STRAIGHT SCREW PLOT, FILETE DROIT	1	1				
7	688–45341–10	PLUG, DRAIN BOUCHON DE VIDANGE	1	1				
8	90430–08003	GASKET JOINT	2	2				
9	6G5–45536–01	SLEEVE, DRIVE SHAFT MANCHON, ARBRE MOTEUR	1	1				
10	663–45376–00	GUIDE, SEAL DAMPER BUTEE, JOINT CAOUTCHOUC	1	1				
11	688–45375–00	DAMPER, SEAL BOURRELET, CAOUTCHOUC	1	1				
12	63P–45378–00	NIPPLE, HOSE RACCORD, TUYAU	1	1				
13	93210–07003	O-RING JOINT TORIQUE	1	1				
14	6E5–45321–00	PLATE PLAQUETTE	1	1				
15	93210–58144	O-RING JOINT TORIQUE	1	1				
16	93106–09014	OIL SEAL JOINT SPY	1	1				
17	90119–06286	BOLT, WITH WASHER BOULON, AVEC RONDELLE	3	3				
18	63P–44150–01	SHIFT CAM ASSY CAME D'INVERSION	1	1				
19	99001–08600	CIRCLIP CIRCLIP	1	1				
20	61A–45538–00	SPACER 1 ENTRETOISE	1	1				

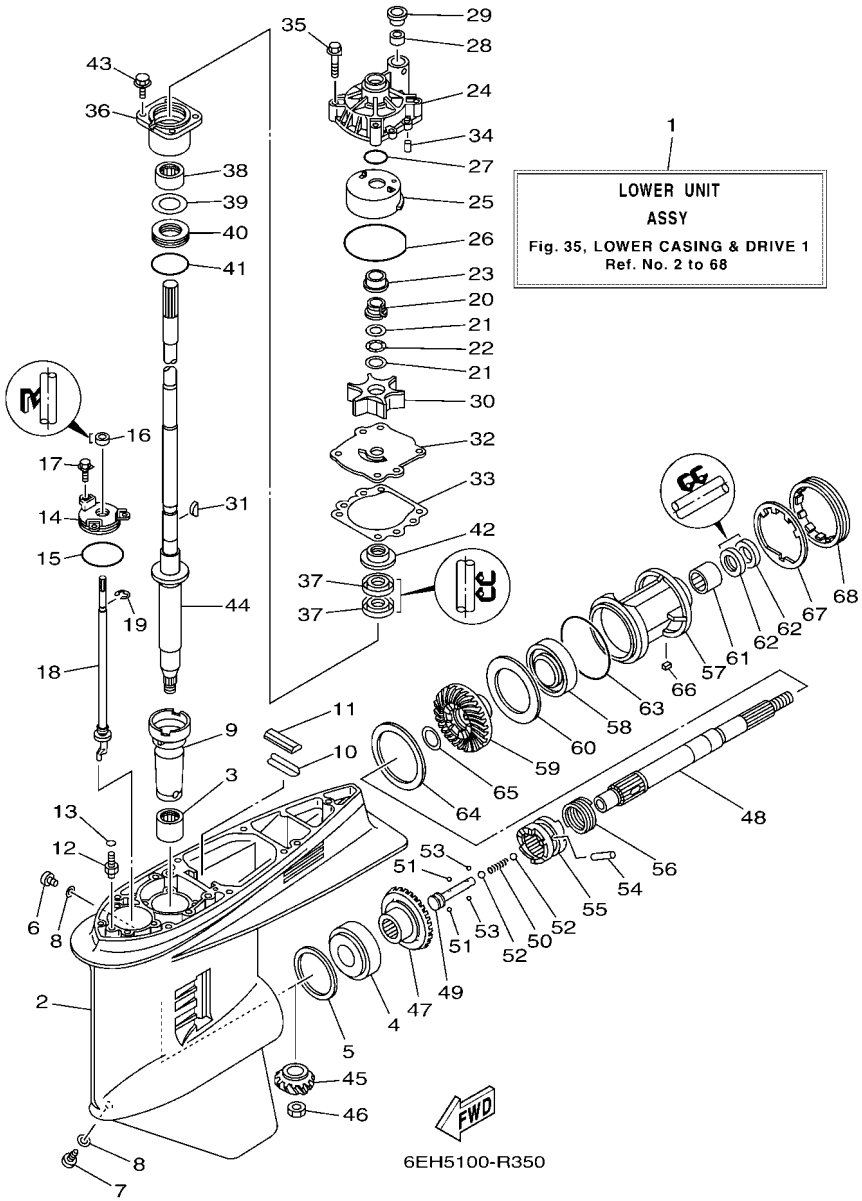

FIG. 35 LOWER CASING & DRIVE 1 — BOITIER D'HELICE TRANSMISSION1

REF. NO.	PART NO. N° PIECES	DESCRIPTION DESCRIPTION	XA	LA				REMARKS REMARQUES
21	90201–22M01	WASHER, PLATE RONDELLE, PLATE	2	2				
22	90206–22M19	WASHER, WAVE RONDELLE, ONDULEE	1	1				
23	61A–45527–00	COLLAR, DRIVE SHAFT ENTRETOISE	1	1				
24	61A–44311–01	HOUSING, WATER PUMP CORPS, POMPE A EAU	1	1				
25	61A–44322–02	INSERT, CARTRIDGE CUVETTE	1	1				
26	93210–86M38	O-RING JOINT TORIQUE	1	1				
27	93210–37160	O-RING JOINT TORIQUE	1	1				
28	6E5–44365–01	DAMPER, WATER SEAL 1 JOINT, TUBE D'EAU 1	1	1				
29	6E5–44312–00	COVER, WATER PUMP HOUSING COUVERCLE	1	1				
30	6E5–44352–01	IMPELLER TURBINE	1	1				
31	90280–04M05	KEY, WOODRUFF CLAVETTE, DEMI-LUNE	1	1				
32	6G5–44323–01	OUTER PLATE, CARTRIDGE PLAQUE EXTERIEURE	1	1				
33	6E5–44315–A0	GASKET, WATER PUMP JOINT, POMPE A EAU	1	1				
34	93606–12019	PIN, DOWEL GOUPILLE	2	2				
35	90119–08191	BOLT, WITH WASHER BOULON, AVEC RONDELLE	4	4				
36	6E5–45331–00–9S	HOUSING, BEARING FLASQUE, ROULEMENT	1	1				
37	93101–28M16	OIL SEAL JOINT SPY	2	2				
38	93317–330U2	BEARING ROULEMENT	1	1				
39	6E5–45587–01	SHIM (T:0.10MM) CALE (T:0.10MM)	1	1				UR UR
	6E5–45587–10	SHIM (T:0.12MM) CALE (T:0.12MM)	1	1				UR UR
	6E5–45587–20	SHIM (T:0.15MM) CALE (T:0.15MM)	1	1				UR UR
	6E5–45587–30	SHIM (T:0.18MM) CALE (T:0.18MM)	1	1				UR UR
	6E5–45587–40	SHIM (T:0.30MM) CALE (T:0.30MM)	1	1				UR UR
	6E5–45587–50	SHIM (T:0.40MM) CALE (T:0.40MM)	1	1				UR UR
	6E5–45587–60	SHIM (T:0.50MM) CALE (T:0.50MM)	1	1				UR UR
40	93341–930V2	BEARING CERVEAUX DE DIRECTION	1	1				
41	93210–55M14	O-RING JOINT TORIQUE	1	1				

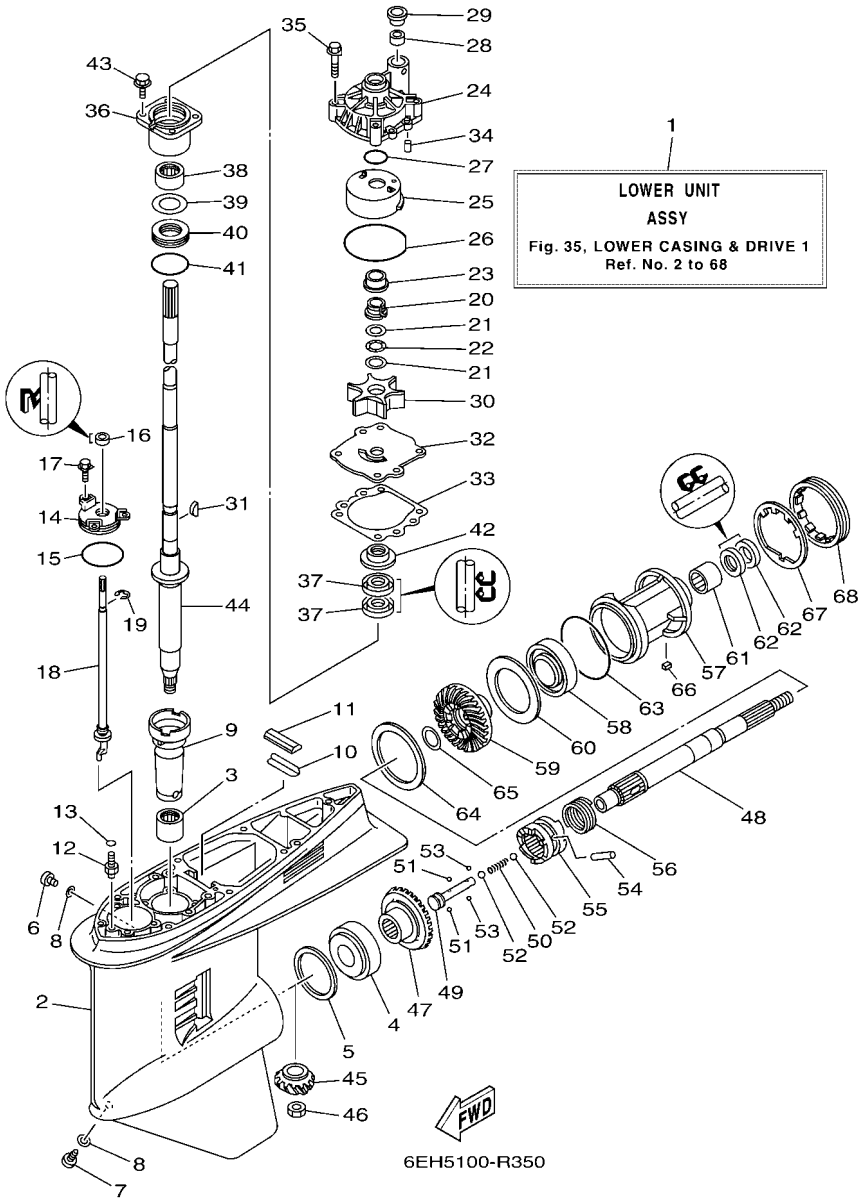

FIG. 35 LOWER CASING & DRIVE 1 — BOITIER D'HELICE TRANSMISSION1

REF. NO.	PART NO. N° PIECES	DESCRIPTION DESCRIPTION	XA	LA				REMARKS REMARQUES
42	6E5–45344–00	COVER, OIL SEAL FLASQE, JOINT D'HUILE	1	1				
43	97E95–08525	BOLT, HEXAGON W/W DEEP RECESS VIS HEXAGONAL AVC RONDELLE	4	4				
44	6DA–45501–10	DRIVE SHAFT COMP. ARBRE MOTEUR COMP.	1					X(25.3") X(25.3")
	63P–45501–01	DRIVE SHAFT COMP. ARBRE MOTEUR COMP.		1				L(20.3") L(20.3")
45	6DA–45551–00	PINION (14T) PIGNON D'ATTAQUE (14D)	1	1				
46	90170–16M01	NUT ECROU	1	1				
47	6DA–45560–00	GEAR 1 (26T) PIGNON 1 (26T)	1	1				
48	6J9–45611–01	SHAFT, PROPELLER ARBRE, HELICE	1	1				
49	6E5–45634–02	SLIDE, SHIFT CONTRE-POUSSOIR	1	1				
50	90501–16M37	SPRING, COMPRESSION RESSORT, COMPRESSION	1	1				
51	93507–32009	BALL BILLE	2	2				
52	93511–32017	BALL BILLES	2	2				
53	93503–16003	BALL BILLES	2	2				
54	90250–08M07	PIN, STRAIGHT GOUPILLE, DROITE	1	1				
55	6DA–45631–01	CLUTCH, DOG CRABOT	1	1				
56	6E5–45633–01	RING, CROSS PIN JONC, GOUPILLE CRABOT	1	1				
57	6J9–45332–00–CA	HOUSING, BEARING FLASQUE, ROULEMENT	1	1				
58	93306–209U0	BEARING ROULEMENT	1	1				
59	6DA–45571–00	GEAR 2 (26T) PIGNON 2 (26T)	1	1				
60	6G5–45576–10	WASHER, THRUST 2 RONDELLE DE CALAGE 2	1	1				
61	93315–43061	BEARING ROULEMENT	1	1				
62	93101–30M17	OIL SEAL JOINT SPY	2	2				
63	93210–97M55	O-RING JOINT TORIQUE	1	1				
64	6G5–45577–02	SHIM (T:0.10MM) CALE (T:0.10MM)	1	1				UR UR
	6G5–45577–10	SHIM (T:0.12MM) CALE (T:0.12MM)	1	1				UR UR
	6G5–45577–20	SHIM (T:0.15MM) CALE (T:0.15MM)	1	1				UR UR
	6G5–45577–30	SHIM (T:0.18MM) CALE (T:0.18MM)	1	1				UR UR

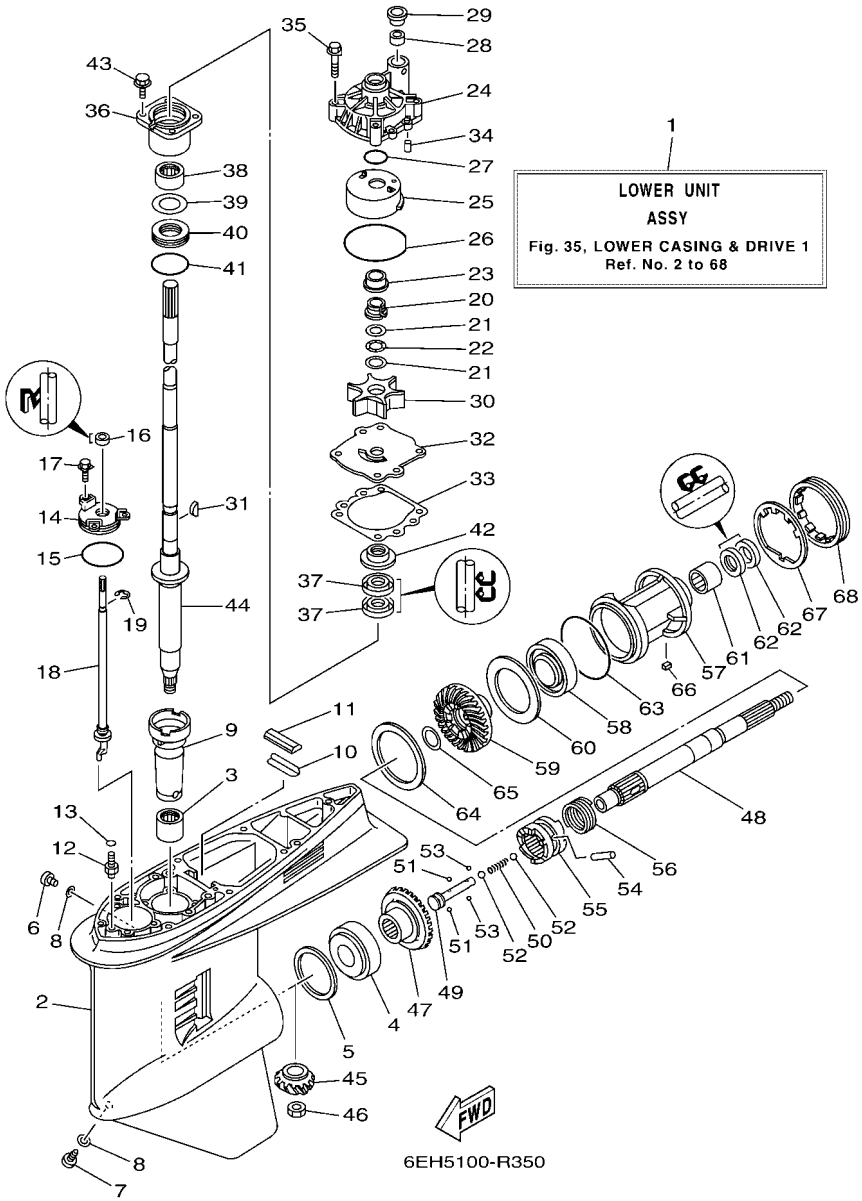

FIG. 35 LOWER CASING & DRIVE 1 — BOITIER D'HELICE TRANSMISSION1

REF. NO.	PART NO. N° PIECES	DESCRIPTION DESCRIPTION	XA	LA				REMARKS REMARQUES
64	6G5–45577–40	SHIM (T:0.30MM) CALE (T:0.30MM)	1	1				UR UR
	6G5–45577–50	SHIM (T:0.40MM) CALE (T:0.40MM)	1	1				UR UR
	6G5–45577–60	SHIM (T:0.50MM) CALE (T:0.50MM)	1	1				UR UR
65	90201–30M92	WASHER, PLATE RONDELLE, PLATE	1	1				
66	90282–04M00	KEY, STRAIGHT CLAVETTE, DROITE	1	1				
67	6G5–45383–01	WASHER, CLAW FREIN D'ECROU	1	1				
68	6G5–45384–02	NUT ECROU	1	1				

FIG. 36 LOWER CASING & DRIVE 2 — BOITIER D HELICE TRANSMISSION2

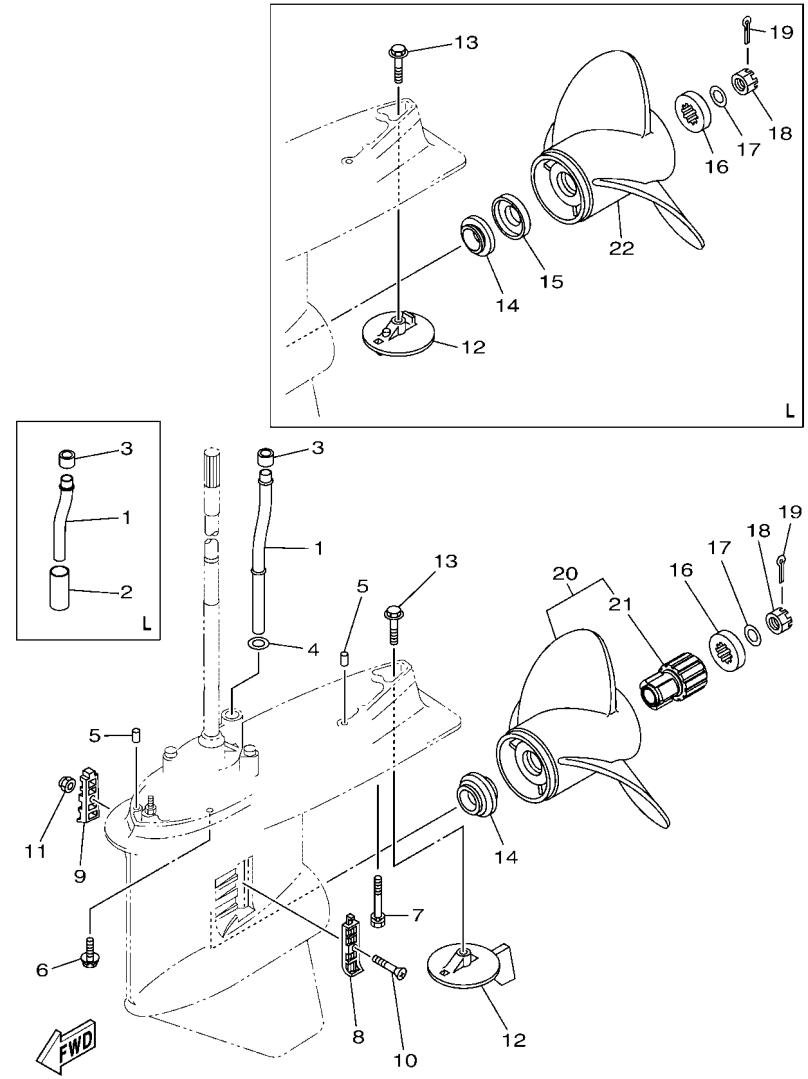

REF. NO.	PART NO. N° PIECES	DESCRIPTION DESCRIPTION	XA	LA				REMARKS REMARQUES
1	6DA–44361–00	TUBE, WATER 1 TUBE D'EAU 1	1					X(25.3") X(25.3")
	6DA–44361–10	TUBE, WATER 1 TUBE D'EAU 1		1				L(20.3") L(20.3")
2	90445–23002	HOSE (L59) DURITE (L59)		1				L(20.3") L(20.3")
3	6E5–44365–01	DAMPER, WATER SEAL 1 JOINT, TUBE D'EAU 1	1	1				
4	90202–16061	WASHER, PLATE RONDELLE, PLATE	1					X(25.3") X(25.3")
5	93608–16M16	PIN, DOWEL AXE	2	2				
6	97E95–10645	BOLT, HEXAGON W/W DEEP RECESS VIS HEXAGONAL AVC RONDELLE	6	6				
7	90119–10072	BOLT, WITH WASHER BOULON, AVEC RONDELLE	1	1				
8	6J9–45214–00	COVER, WATER INLET 1 GRILLE, ENTREE D'EAU 1	1	1				
9	6J9–45215–00	COVER, WATER INLET 2 GRILLE, ENTREE D'EAU 2	1	1				
10	90152–05M08	SCREW, COUNTERSUNK VIS, TETE NOYEE	1	1				
11	90185–05002	NUT, NYLON ECROU,AUTO-BLOQUANT	1	1				
12	6J9–45371–01	TAB-TRIM ANODE DERIVE	1					X(25.3") X(25.3")
	6CE–45373–00	ANODE ANODE		1				L(20.3") L(20.3")
13	90105–10M00	BOLT, FLANGE BOULON, A COLLERETTE	1	1				
14	63P–45987–00	SPACER 1 ENTRETOISE 1	1					X(25.3") X(25.3")
	60X–45987–10	SPACER 1 ENTRETOISE 1		1				L(20.3") L(20.3")
15	60X–45995–00	SPACER 3 ENTRETOISE 3		1				L(20.3") L(20.3")
16	688–45997–01	SPACER 2 ENTRETOISE 2	1	1				
17	92990–18200	WASHER RONDELLE, PLATE	1	1				
18	90171–18M04	NUT, CASTLE ECROU, CRENELE	1	1				
19	91490–40030	PIN. COTTER GOUPILLE	1	1				
20	68F–45970–20	PROPELLER (3X14-1/2"X15"-M) HELICE (3X14-1/2"X15"-M)	1					UR SDS PROP. UR SDS PROP.
	68F–45972–20	PROPELLER (3X14-1/4"X17"-M) HELICE (3X14-1/4"X17"-M)	1					UR SDS PROP. UR SDS PROP.
	68F–45978–20	PROPELLER (3X14-1/4"X18"-M) HELICE (3X14-1/4"X18"-M)	1					UR SDS PROP. UR SDS PROP.
	68F–45974–20	PROPELLER (3X13-3/4"X19"-M) HELICE (3X13-3/4"X19"-M)	1					UR SDS PROP. UR SDS PROP.
	68F–45976–20	PROPELLER (3X13-3/4"X21"-M) HELICE (3X13-3/4"X21"-M)	1					UR SDS PROP. UR SDS PROP.

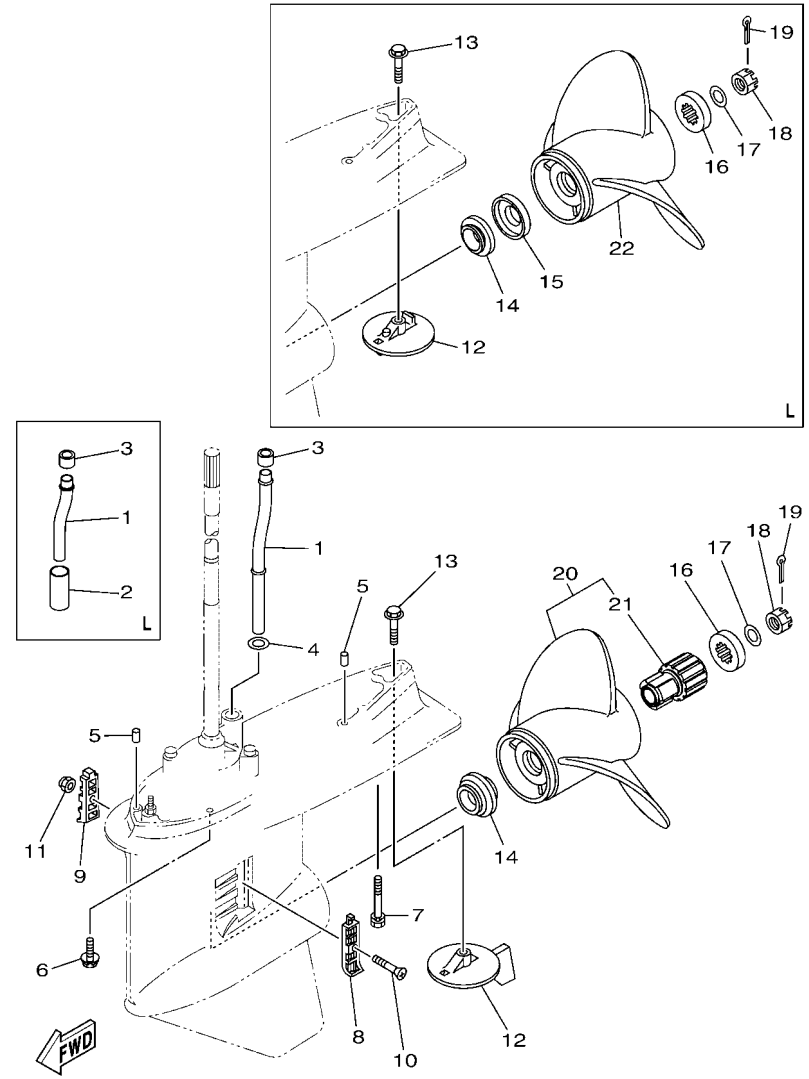

FIG. 36 LOWER CASING & DRIVE 2 — BOITIER D HELICE TRANSMISSION2

REF. NO.	PART NO. N° PIECES	DESCRIPTION DESCRIPTION	XA	LA				REMARKS REMARQUES
21	6CE–45C81–10	.DAMPER RUBBER, PROPELLER 1 .AMORTISSEUR HELICE 1	1					
22	6CB–45932–11	PROPELLER (3X15-1/8"X22"-T2) HELICE (3X15-1/8"X22"-T2)		1				UR UR
	6CB–45974–11	PROPELLER (3X15-1/8"X23"-T2) HELICE (3X15-1/8"X23"-T2)		1				UR UR
	6CB–45930–11	PROPELLER (3X15-1/8"X24"-T2) HELICE (3X15-1/8"X24"-T2)		1				UR UR

FIG. 37 STEERING GUIDE — FIXATION DE DIRECTION

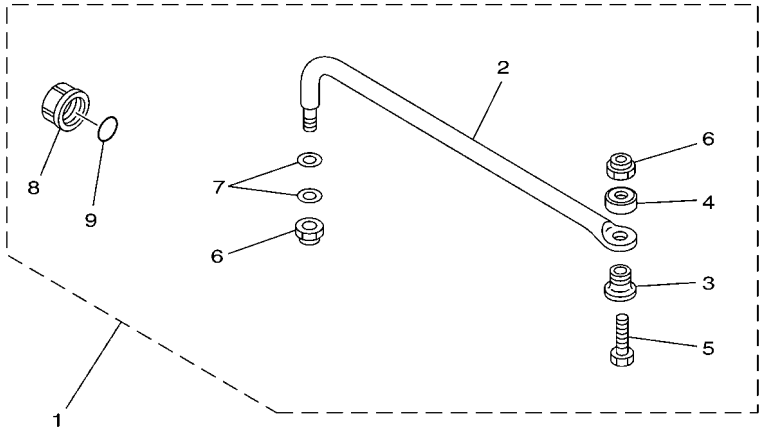

67H0100-9290

REF. NO.	PART NO. N° PIECES	DESCRIPTION DESCRIPTION	XA	LA				REMARKS REMARQUES
1	6E5–61350–02	STEERING GUIDE ATTACHMENT KIT FIXATIONS DE DIRECTION	1	1				AP AP
2	6E5–61351–01	.ROD, STEERING LINK .RENVOI DE DIRECTION	1	1				
3	90387–10M61	.COLLAR .COLLERETTE	1	1				
4	90560–12M01	.SPACER .ENTRETOISE	1	1				
5	6E5–61355–00	.BOLT .BOULON	1	1				
6	90185–09M01	.NUT, SELF-LOCKING .ECROU,AUTO-BLOQUANT	2	2				
7	90201–10M20	.WASHER, PLATE .RONDELLE, PLATE	2	2				
8	6E5–43145–01	.CAP, CLAMP BRACKET .CAPUCHON, PRESSE	1	1				
9	93210–16275	.O-RING .JOINT TORIQUE	1	1				

FIG. 38 OPTIONAL PARTS 1 — PIECES OPTIONNELLES 1

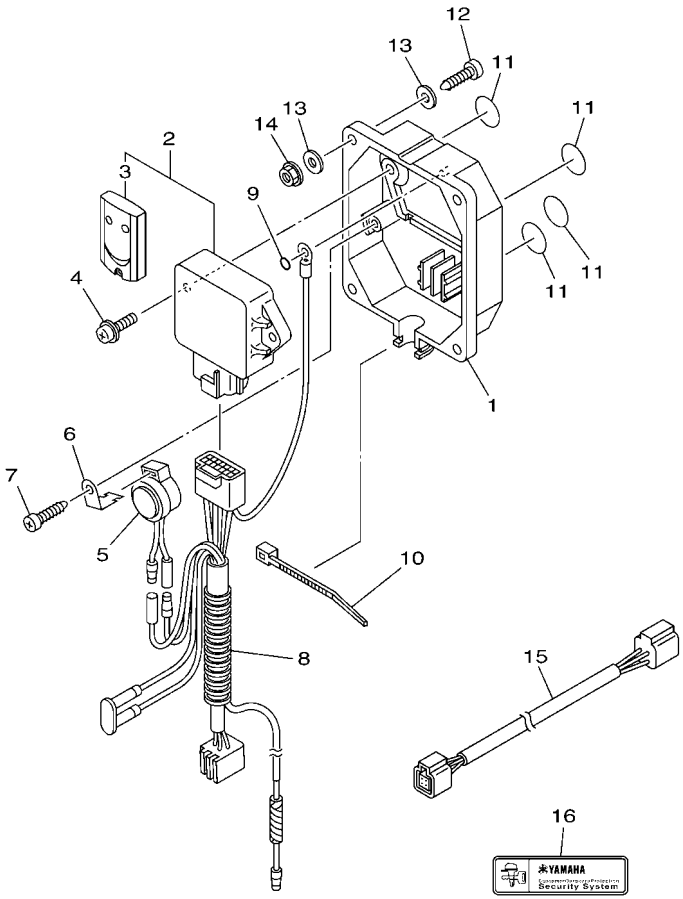

6CJ1100-K370

REF. NO.	PART NO. N° PIECES	DESCRIPTION DESCRIPTION	XA	LA				REMARKS REMARQUES
1	6Y8–86267–00	CASE COMPLETE 1 CARTER (ENS.) 1	1	1				
2	6Y8–86260–03	REMOTE CONTROL UNIT ASSY UNITE DE TELECOMMANDE (ENS.)	1	1				
3	6AA–86261–01	.XMTR. COMP. .XMTR. COMP.	2	2				
4	97980–06216	SCREW, WITH WASHER VIS, AVEC RONDELLE	2	2				
5	6X4–83383–00	BUZZER RONFLEUR	1	1				
6	6X4–83386–00	STAY, BUZZER SUPPOR, RONFLEUR	1	1				
7	97780–60620	SCREW, TAPPING VIS, TETE BOMBEE	1	1				
8	6Y8–82509–10	WIRE, SUB LEAD FIL, SECONDAIRE	1	1				
9	93210–04279	O-RING JOINT TORIQUE	1	1				
10	90465–11M10	CLAMP BRIDE	1	1				
11	6Y8–8454G–00	PATCH 1 TAMPON 1	4	4				
12	90167–06M00	SCREW, TAPPING VIS, TETE FRAISEE	4	4				UR UR
	97880–06035	SCREW, PAN HEAD VIS, TETE TRONCONIQUE	4	4				UR UR
13	90201–06M30	WASHER, PLATE RONDELLE, PLATE	8	8				
14	95780–06300	NUT, FLANGE ECROU	4	4				
15	6Y8–82521–11	2FT PIGTAIL BUS FAISCEAU (L: 2FT.)	1	1				
16	6Y8–48277–00	STICKER 1 ETIQUETTE 1	4	4				

FIG. 39 OPTIONAL PARTS 2 — PIECES OPTIONNELLES 2

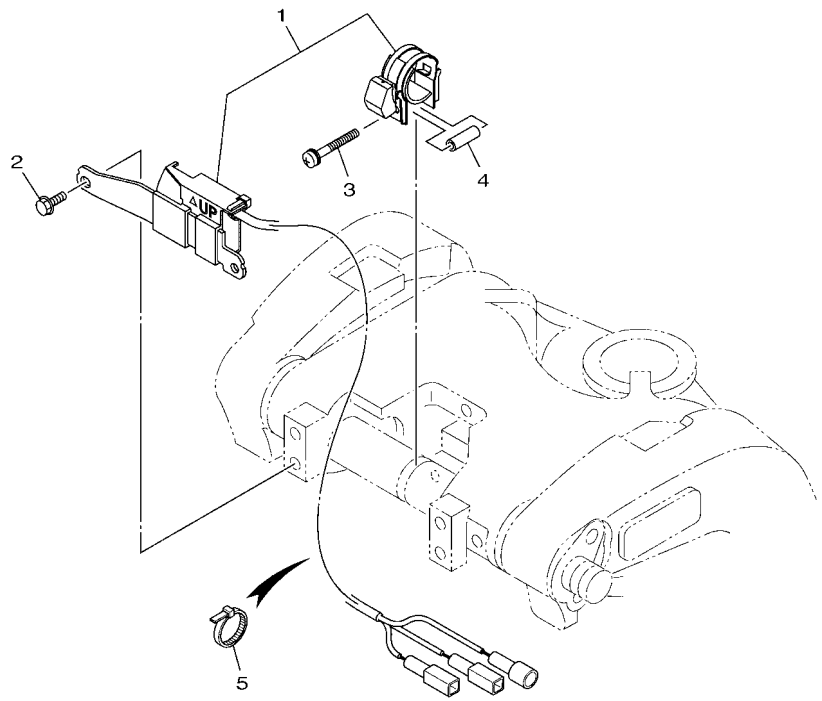

6DA4100-Q370

REF. NO.	PART NO. N° PIECES	DESCRIPTION DESCRIPTION	XA	LA				REMARKS REMARQUES
1	63P–825E0–02	TILT LIMIT SWITCH ASSY COMMUTATEUR, LIMIT INCLINAISON	1	1				
2	97E95–06516	BOLT, HEXAGON W/W DEEP RECESS VIS HEXAGONAL AVC RONDELLE	2	2				
3	90159–05059	SCREW, WITH WASHER VIS, AVEC RONDELLE	1	1				
4	90387–05004	COLLAR COLLERETTE	1	1				
5	90465–11M10	CLAMP BRIDE	5	5				

FIG. 40 REPAIR KIT 1 — KITS DE REPARATION 1

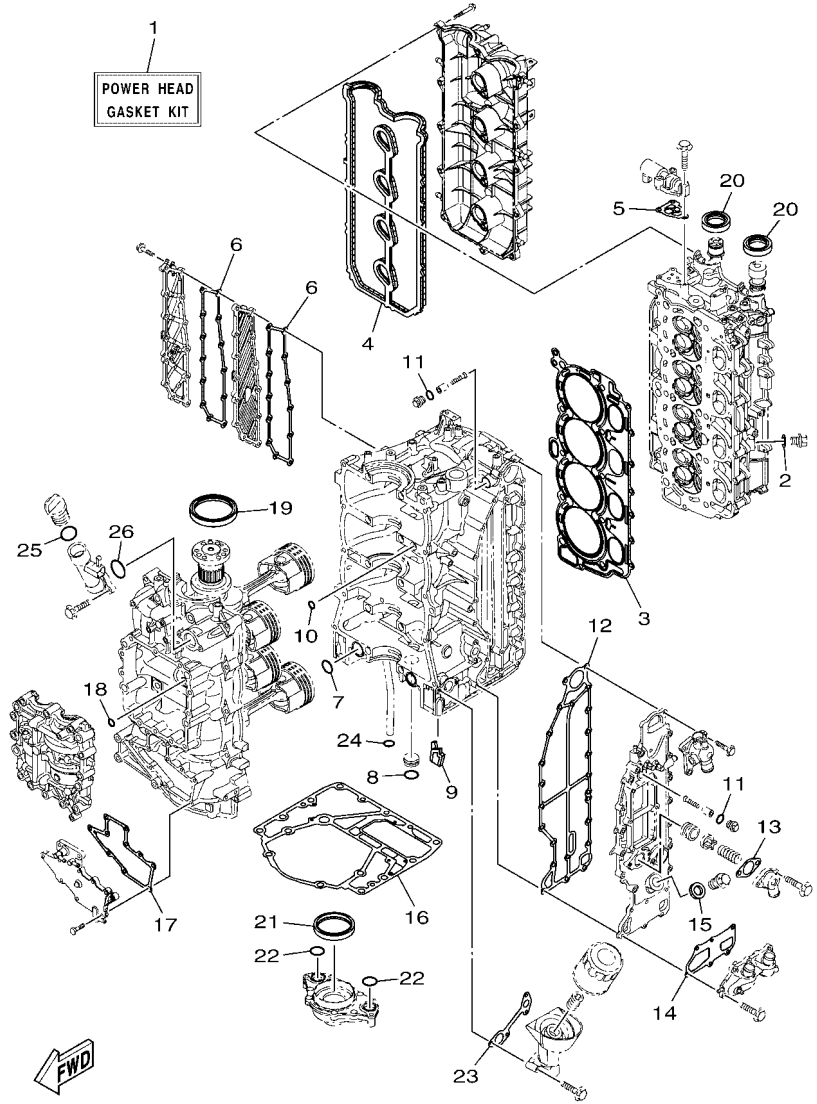

6DA1100-M380

REF. NO.	PART NO. N° PIECES	DESCRIPTION DESCRIPTION	XA	LA				REMARKS REMARQUES
1	6DA–W0001–01	POWER HEAD GASKET KIT POCHETTE DE JINTS TETE MOTRICE	1	1				
2	90430–14115	.GASKET .JOINT	1	1				
3	6DA–11181–00	.GASKET, CYLINDER HEAD 1 .JOINT, DE CULASSE 1	1	1				
4	6DA–11193–00	.GASKET, HEAD COVER 1 .JOINT, COUVERCLE DE CULASSE 1	1	1				
5	6CB–1242F–00	.GASKET, FILTER .JOINT, FILTRE	1	1				
6	6DA–15353–01	.GASKET, DRAIN .JOINT, PLOT DE VIDANGE	2	2				
7	93210–25552	.O-RING .JOINT TORIQUE	2	2				
8	93210–25647	.O-RING .JOINT TORIQUE	1	1				
9	6DA–14664–01	.GROMMET, WATER SHUT .PASSE-FIL	1	1				
10	93210–12648	.O-RING .JOINT TORIQUE	1	1				
11	93210–13M63	.O-RING .JOINT TORIQUE	2	2				
12	6DA–41114–01	.GASKET, EXHAUST OUTER COVER .JOINT, COUVERCLE D'ECHAPPEMENT	1	1				
13	60V–11382–A0	.GASKET 2 .JOINT 2	1	1				
14	6DA–11381–01	.GASKET 1 .JOINT 1	1	1				
15	90201–186F1	.WASHER, PLATE .RONDELLE, PLATE	1	1				
16	63P–11351–03	.GASKET, CYLINDER .JOINT, D'EMBASE	1	1				
17	6DA–15451–01	.GASKET, CRANKCASE COVER 1 .JOINT, COUVERCLE DE CARTER 1	1	1				
18	93210–08001	.O-RING .JOINT TORIQUE	1	1				
19	93102–85008	.OIL SEAL .JOINT SPY	1	1				
20	93102–38008	.OIL SEAL .JOINT SPY	2	2				
21	6CB–11355–00	.SEAL, CYLINDER 1 .JOINT, SPY CYLINDRE	1	1				
22	93210–25552	.O-RING .JOINT TORIQUE	2	2				
23	6DA–13475–00	.GASKET .JOINT	1	1				
24	93210–19MJ3	.O-RING .JOINT TORIQUE	1	1				
25	93210–24M79	.O-RING .JOINT TORIQUE	1	1				
26	93210–357A3	.O-RING .JOINT TORIQUE	1	1				

FIG. 41 REPAIR KIT 2 — KITS DE REPARATION 2

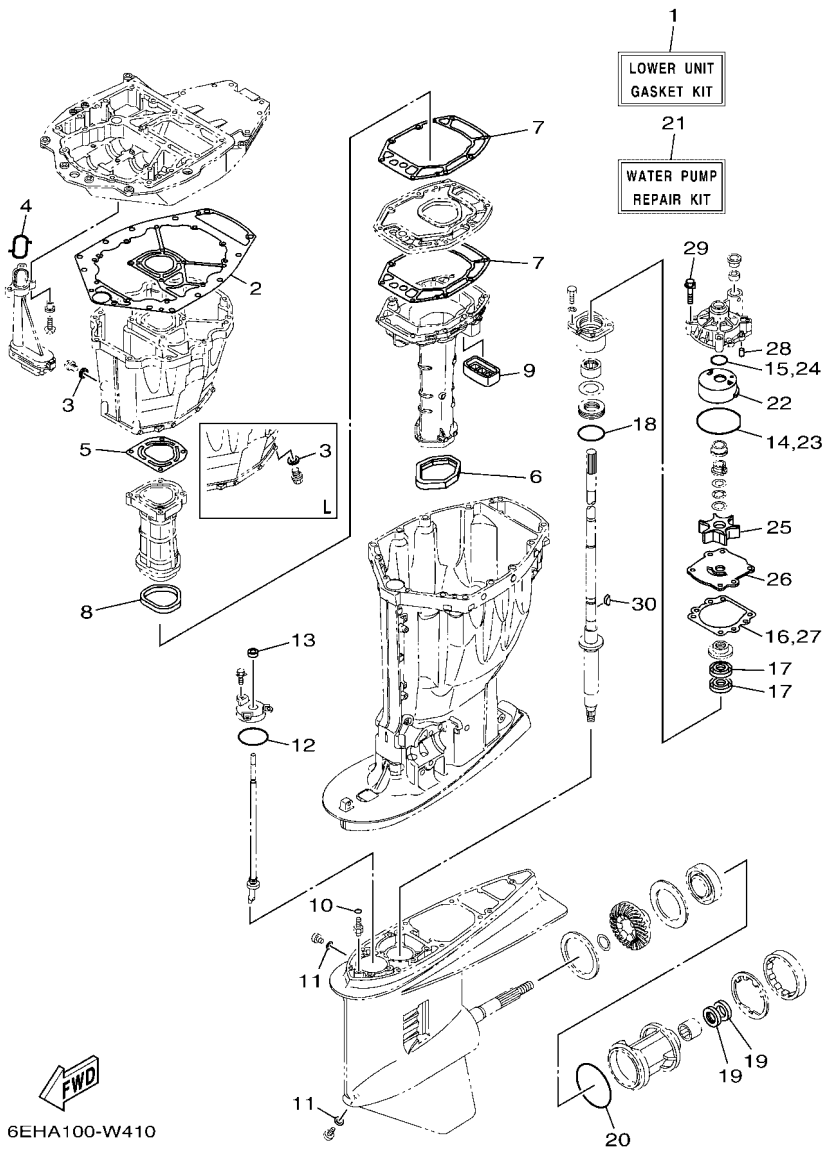

REF. NO.	PART NO. N° PIECES	DESCRIPTION DESCRIPTION	XA	LA				REMARKS REMARQUES
1	63P–W0001–22	LOWER UNIT GASKET KIT POCHETTE DE JOINTS EMBASE	1	1				
2	63P–15312–02	.GASKET, OIL PAN .JOINT DE VENTILATEUR D'HUILE	1	1				
3	90430–14M09	.GASKET .JOINT	1	1				
4	63P–13415–00	.SEAL, OIL STRAINER .JOINT, FILTRE A HUILE	1	1				
5	63P–41133–A0	.GASKET, EXHAUST MANIFOLD 1 .JOINT, PIPE D'ECHAPPEMENT	1	1				
6	69J–45123–00	.GASKET, MUFFLER .JOINT, POT DE DETENTE	1	1				
7	63P–41134–A1	.GASKET, EXHAUST MANIFOLD .JOINT, PIPE D'ECHAPPEMENT	2	2				
8	63P–41138–00	.SEAL, EXT. 1 .JOINT DE GROUPE 1	1	1				
9	69J–45127–01	.SEAL .JOINT	1	1				
10	93210–07003	.O-RING .JOINT TORIQUE	2	2				
11	90430–08003	.GASKET .JOINT	2	2				
12	93210–58144	.O-RING .JOINT TORIQUE	1	1				
13	93106–09014	.OIL SEAL .JOINT SPY	1	1				
14	93210–86M38	.O-RING .JOINT TORIQUE	1	1				
15	93210–37160	.O-RING .JOINT TORIQUE	1	1				
16	6E5–44315–A0	.GASKET, WATER PUMP .JOINT, POMPE A EAU	1	1				
17	93101–28M16	.OIL SEAL .JOINT SPY	2	2				
18	93210–55M14	.O-RING .JOINT TORIQUE	1	1				
19	93101–30M17	.OIL SEAL .JOINT SPY	2	2				
20	93210–97M55	.O-RING .JOINT TORIQUE	1	1				
21	61A–W0078–A4	WATER PUMP REPAIR KIT KIT DE REPARATION DE LA POMPE	1	1				
22	61A–44322–02	.INSERT, CARTRIDGE .CUVETTE	1	1				
23	93210–86M38	.O-RING .JOINT TORIQUE	1	1				
24	93210–37160	.O-RING .JOINT TORIQUE	1	1				
25	6E5–44352–01	.IMPELLER .TURBINE	1	1				
26	6G5–44323–01	.OUTER PLATE, CARTRIDGE .PLAQUE EXTERIEURE	1	1				
27	6E5–44315–A0	.GASKET, WATER PUMP .JOINT, POMPE A EAU	1	1				

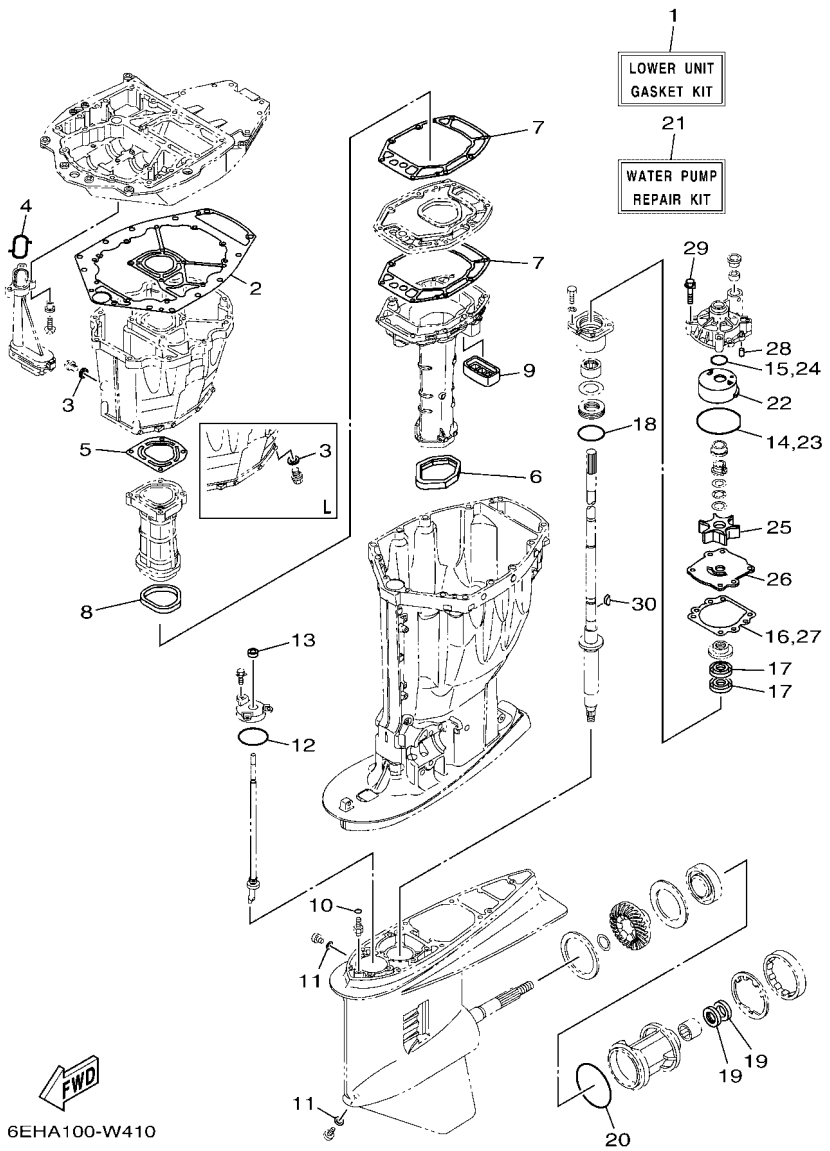

FIG. 41 REPAIR KIT 2 — KITS DE REPARATION 2

REF. NO.	PART NO. N° PIECES	DESCRIPTION DESCRIPTION	XA	LA				REMARKS REMARQUES
28	93606–12019	.PIN, DOWEL .GOUPILLE	2	2				
29	90119–08191	.BOLT, WITH WASHER .BOULON, AVEC RONDELLE	4	4				
30	90280–04M05	.KEY, WOODRUFF .CLAVETTE, DEMI-LUNE	1	1				

PART NO. N° PIECES	REF. NO.
6DA–11110–02–9S	5 – 2
6DA–11133–10	5 – 3
6DA–11181–00	5 – 17
	40 – 3
6DA–11191–00	5 – 22
6DA–11193–00	5 – 23
	40 – 4
6G8–11197–A0	6 – 4
6ML–11301–00	5 – 11
69J–11301–02	6 – 18
68T–11325–00	1 – 3
	6 – 5
6E5–11325–00	1 – 2
	1 – 6
	3 – 8
	3 – 29
6ML–11325–00	1 – 1
	1 – 4
	5 – 12
	6 – 19
67F–11328–01	5 – 13
	6 – 20
63P–11351–03	3 – 19
	40 – 16
6CB–11355–00	34 – 16
	40 – 21
6G5–11372–00	6 – 14
6DA–11381–01	6 – 25
	40 – 14
60V–11382–A0	6 – 16
	40 – 13
6DA–11410–00	4 – 1
6DA–11416–00	4 – 5
6DA–11416–10	4 – 5
6DA–11416–20	4 – 5
6DA–11417–00	4 – 6
6DA–11417–10	4 – 6
6DA–11417–20	4 – 6
6DA–11426–00	4 – 7
6DA–11427–00	4 – 8
6CB–11478–00	4 – 2
6DA–11500–00	3 – 20
63P–11512–00	3 – 23
6DA–11590–00	8 – 21
6DA–11595–00	8 – 24
6FA–115A0–00	8 – 13
6CB–11603–00	4 – 12
6DA–11631–21–94	4 – 11

PART NO. N° PIECES	REF. NO.
6CB–11633–00	4 – 13
63P–11654–10	4 – 10
6JD–11656–00	4 – 15
6JD–11656–10	4 – 15
6JD–11656–20	4 – 15
6DA–11998–00	25 – 21
6DA–11999–00	25 – 23
6CB–12111–00	8 – 1
6CB–12113–00	8 – 4
51Y–12119–00	8 – 7
6DA–12121–00	8 – 2
6DA–12171–01	8 – 9
6DA–12181–01	8 – 11
6DA–12411–01	1 – 5
	6 – 28
6AW–12412–00	6 – 29
6DA–12413–A0–9S	6 – 30
60H–12416–00	6 – 11
6DA–1241B–A0–9S	6 – 50
6CB–1242F–00	6 – 2
	40 – 5
6DA–1243A–00	6 – 15
6DA–1243E–00	6 – 31
6DA–1244H–00	6 – 33
6DA–12491–00	6 – 37
6DA–12527–00–9S	6 – 24
6DA–12552–00	7 – 13
6AW–12572–00	25 – 4
6DA–12576–00	7 – 1
	11 – 6
6DA–12578–00	7 – 6
6DA–12579–00	7 – 11
6R3–12581–00	25 – 5
6AW–12582–00	25 – 6
6R3–12583–00	25 – 7
6DA–12589–00	7 – 2
	7 – 15
6P2–12615–00	8 – 18
6P2–12623–00	8 – 16
6P2–12645–22	8 – 15
6P2–12663–00	8 – 17
6S5–12858–00	6 – 41
6CB–13016–00	1 – 10
	12 – 5
6AW–13119–00	34 – 14
6LH–13132–00	12 – 25
6DA–13152–00	9 – 3
6DA–13160–02	10 – 6

PART NO. N° PIECES	REF. NO.
6DA–13161–02	10 – 7
6DA–13300–00	34 – 12
6DA–13329–00	34 – 13
63P–13411–00	34 – 8
63P–13415–00	34 – 10
	41 – 4
63P–13437–63	16 – 27
69J–13440–04	1 – 8
	6 – 40
6DA–13446–01	6 – 42
6DA–13475–00	6 – 43
	40 – 23
63P–13490–00	3 – 31
6DA–13532–00	11 – 1
6DA–13545–00	11 – 18
68V–13546–10	11 – 20
6DA–13547–00	11 – 23
6DA–13548–00	11 – 21
6DA–13564–01	10 – 4
6AW–13577–10	10 – 10
6CB–13593–00	12 – 21
	26 – 37
69J–13631–00	34 – 15
6DA–13641–00	9 – 11
6DA–13645–00	9 – 13
6DA–13646–00	9 – 12
63P–13716–00	12 – 20
69J–13716–00	26 – 36
6LH–13716–00	12 – 36
6DA–13751–01	9 – 1
6DA–13761–01	10 – 8
6LH–13781–00	12 – 29
6LH–13784–00	12 – 32
6DA–13881–00	9 – 19
6DA–13892–00	12 – 11
6DA–13893–00	12 – 12
6CB–13906–01	12 – 8
6LH–13915–00	1 – 11
	12 – 24
6LH–13938–00	12 – 37
6AW–1410B–00	10 – 9
6C5–14127–10	12 – 23
6FM–14137–00	12 – 39
6DA–14146–00	12 – 10
6P2–14149–00	12 – 35
6LH–14180–00	12 – 1
6LH–14181–00	12 – 14
6DA–14182–00	12 – 2

PART NO. N° PIECES	REF. NO.
6P2–14191–00	12 – 15
6CB–14216–00	12 – 6
6P2–14386–00	12 – 31
6P2–1441J–01	9 – 7
6DA–14440–00	9 – 5
6LH–1447B–00	12 – 28
6CB–14546–00	12 – 27
6CB–14564–00	12 – 9
63P–14567–00	12 – 19
6K8–14591–10	12 – 17
69J–14624–01	33 – 27
6DA–14664–01	3 – 15
	40 – 9
6DA–14711–01	33 – 12
6DA–14711–11	33 – 12
6DA–1475A–00	11 – 11
6DA–1475F–00	11 – 13
6DA–1475G–00	11 – 16
6CB–14984–00	1 – 12
	12 – 30
6CB–14985–00	12 – 26
6CB–14989–00	11 – 15
6DA–15109–01–9S	3 – 2
6DA–15311–01	34 – 2
63P–15311–03	34 – 2
63P–15312–02	34 – 1
	41 – 2
63P–15316–01	34 – 5
6BB–15316–01	33 – 29
6DA–15319–00	6 – 47
6DA–15353–01	3 – 7
	40 – 6
6DA–15362–00	34 – 19
6G8–15363–00	6 – 45
6DA–15373–00	9 – 9
6DA–15377–00	34 – 20
6DA–15411–00–9S	3 – 24
6DA–15414–00–9S	3 – 4
6DA–15423–00–9S	3 – 6
6DA–15451–01	3 – 25
	40 – 17
6DA–2134X–00	10 – 30
6E5–21744–00	11 – 22
6DA–2416A–00	11 – 14
6P2–24170–00	10 – 27
63P–2419A–01	10 – 28
6CB–24217–00	12 – 7
6DA–24310–01	13 – 2

PART NO. N° PIECES	REF. NO.
6DA–24313–00	14 – 19
6DA–24314–00	14 – 3
6DA–24317–00	13 – 12
6DA–24323–00	13 – 15
6DA–24324–10	13 – 8
6E5–24351–51	14 – 4
6YK–24360–73	15 – 1
6CE–24377–00	7 – 3
	11 – 7
6AW–24377–01	14 – 2
688–24378–00	11 – 19
6CE–24378–00	6 – 32
6E5–24378–00	13 – 11
69J–24379–00	12 – 13
6GR–24410–02	10 – 15
6DA–24425–00	10 – 13
6DA–24426–00	10 – 18
6EK–24452–00	12 – 16
4SV–24453–00	12 – 33
6CB–24460–00	12 – 4
6DA–24462–00	10 – 23
6P3–24469–00	14 – 11
6CB–24482–00	12 – 18
6DA–24491–00	10 – 17
6LH–24492–00	12 – 38
6DA–24492–01	10 – 16
6CB–24501–01	1 – 9
	12 – 3
6P3–24519–00	14 – 12
6P3–24560–04	14 – 8
6P3–24562–03	14 – 10
6P3–24563–02	1 – 13
	14 – 9
6P3–24564–00	1 – 14
	14 – 13
6DA–24566–00	14 – 14
6DA–24596–01	14 – 6
69J–28100–03	14 – 21
6CB–2812A–00	17 – 29
6EH–28199–74–D0	14 – 22
6EH–28199–74–E0	14 – 22
6EH–28199–74–F0	14 – 22
6EH–28199–74–G0	14 – 22
6EH–28199–74–H0	14 – 22
6EH–28199–74–S0	14 – 22
6EH–28199–84–K0	14 – 23
6EH–28199–84–L0	14 – 23
6EH–28199–84–M0	14 – 23

PART NO. N° PIECES	REF. NO.
6EH–28199–84–N0	14 – 23
6EH–28199–84–P0	14 – 23
6EH–28199–84–R0	14 – 23
6DA–41113–00–9S	6 – 8
6DA–41114–01	6 – 9
	40 – 12
63P–41131–02	33 – 9
63P–41133–A0	33 – 10
	41 – 5
63P–41134–A1	33 – 16
	41 – 7
63P–41137–06	33 – 1
63P–41138–00	33 – 18
	41 – 8
6BG–42384–00	25 – 2
6DA–42384–00	23 – 23
6DA–42510–00–8D	28 – 8
6DA–42510–10–8D	30 – 8
6DA–42541–00	25 – 8
6FH–42610–02	2 – 1
6DA–42615–00	23 – 5
6DA–42617–00	16 – 26
6EH–4261A–03	2 – 2
6CB–42647–A0	2 – 3
6DA–42662–01	3 – 33
6CB–42662–02	25 – 25
6AW–42663–01	2 – 9
6CB–42675–10	2 – 14
6CB–42676–10	2 – 15
6FA–42677–00	2 – 16
6FH–42678–00	2 – 13
6D6–42681–00	2 – 17
6EH–42682–00	2 – 18
6DA–42697–00	2 – 12
6DA–42710–00–8D	23 – 1
648–42715–00	26 – 28
63P–42716–01	23 – 6
6DA–42717–01	23 – 22
69J–42723–01	20 – 13
6E5–42724–01	33 – 7
6DA–42725–03	23 – 2
6H1–42726–22	25 – 1
6KA–42727–00	23 – 26
6DA–42740–01	24 – 1
6DA–42741–11–8D	24 – 1
6DA–42744–00	3 – 32
6BG–42748–01	16 – 16
6H4–42748–01	23 – 24

PART NO. N° PIECES	REF. NO.
68F–42753–00	23 – 30
63P–42756–00	25 – 12
6CB–42761–00	23 – 3
6DA–42769–01	33 – 8
6DA–42770–01	24 – 2
6N9–42791–41	33 – 21
6N9–42792–41	33 – 22
6EE–42794–40	23 – 32
6EE–42794–50	23 – 33
6DA–42815–01–8D	23 – 7
6DA–42816–02–8D	23 – 8
6DA–42817–02–8D	23 – 9
6CB–42818–00	23 – 13
6CB–42819–00	23 – 14
64E–43111–02–8D	27 – 1
6CB–43111–10–8D	29 – 1
64E–43112–02–8D	27 – 7
6CB–43112–10–8D	29 – 8
64E–43126–10	27 – 35
	29 – 26
64E–43131–30	27 – 11
	29 – 13
61A–43132–01	29 – 6
61A–43133–01	29 – 9
64E–43139–11	28 – 1
	30 – 1
66T–43144–00	23 – 17
6G5–43144–00	27 – 25
6E5–43145–01	37 – 8
6G5–43148–00	27 – 30
6G5–43181–02	27 – 27
6G5–43185–02	27 – 28
64E–43311–10–8D	29 – 22
64E–43311–20–8D	27 – 21
63P–43338–10	31 – 54
61A–43376–00	28 – 6
	30 – 6
6CB–43611–00	29 – 34
6CB–43800–13	31 – 1
63P–43801–10	31 – 4
63P–43802–21	31 – 37
6EK–43804–11	32 – 3
6EK–43805–01	32 – 2
6EK–4380F–00	32 – 6
6CB–4380L–13	31 – 2
63P–4380P–20	31 – 9
63P–43810–21	31 – 3
63P–43811–20	31 – 6

PART NO. N° PIECES	REF. NO.
63P–43812–20	31 – 23
63P–43814–20	31 – 13
6CJ–43816–00	31 – 61
63P–43816–10	31 – 20
6BC–43818–00	27 – 19
	29 – 20
63P–4381C–20	31 – 41
63P–4381J–10	31 – 62
63P–43820–20	31 – 26
63P–43821–21	31 – 25
6CJ–43829–20	31 – 17
63P–4382A–10	31 – 31
63P–4382C–20	31 – 15
63P–43830–20	31 – 42
69J–43831–00	31 – 66
6H1–43841–11	31 – 18
63P–43843–10	31 – 53
6H1–43844–10	31 – 45
63P–43844–20	31 – 51
63P–43845–20	31 – 34
63P–43847–10	31 – 29
6H1–4384G–11	31 – 44
63P–4384G–20	31 – 55
63P–4384H–10	31 – 32
63P–43851–20	31 – 48
63P–43854–10	31 – 30
69J–43855–00	31 – 52
6H1–43856–10	31 – 46
63P–43857–10	31 – 59
63P–4385H–10	31 – 60
6CJ–43861–10	31 – 68
63P–43861–20	31 – 7
6H1–43862–00	31 – 10
	31 – 12
6EK–43862–01	32 – 12
63P–43862–10	31 – 24
6D8–43863–00	31 – 22
63P–43863–10	31 – 8
6H1–43866–01	31 – 39
62X–4386K–00	32 – 7
62X–43871–00	31 – 27
61A–43876–01	31 – 36
63P–43876–10	31 – 19
61A–43878–00	31 – 65
63P–43879–10	32 – 8
6KW–43880–01	32 – 1
63P–43881–22	32 – 10
6EK–43882–00	32 – 11

PART NO. N° PIECES	REF. NO.
6EK–43892–00	32 – 4
69J–4389J–00	31 – 33
63P–44117–01	26 – 8
63P–44118–00	26 – 23
6DA–44120–02	26 – 18
6DA–44120–12	26 – 18
6DA–44121–00	26 – 16
63P–44122–00	26 – 13
63P–44150–01	35 – 18
6DA–44176–00	26 – 7
6DA–44194–00	28 – 32
	30 – 35
61A–44311–01	35 – 24
6E5–44312–00	35 – 29
6E5–44315–A0	35 – 33
	41 – 16
	41 – 27
61A–44322–02	35 – 25
	41 – 22
6G5–44323–01	35 – 32
	41 – 26
6E5–44352–01	35 – 30
	41 – 25
6DA–44361–00	36 – 1
6DA–44361–10	36 – 1
6E5–44365–01	35 – 28
	36 – 3
6E5–44366–01	33 – 32
6P2–44391–00	23 – 25
63P–44511–00	28 – 34
	30 – 37
6DA–44514–00	28 – 25
	30 – 28
6DA–44526–00	28 – 29
	30 – 32
6G5–44526–00	27 – 3
6DA–44532–00	28 – 30
	30 – 33
69J–44533–00	30 – 22
68V–44551–00–8D	30 – 13
6DA–44551–00–CA	28 – 13
6DA–44552–00–CA	28 – 23
63P–44553–00–8D	30 – 25
60V–44555–00	30 – 16
63P–44555–00	28 – 16
63P–44556–00–8D	30 – 26
6DA–44575–00	28 – 15
61A–44575–01	30 – 15

PART NO. N° PIECES	REF. NO.
6DA–45111–01–8D	33 – 20
6DA–45111–10–8D	33 – 20
69J–45123–00	33 – 13
	41 – 6
69J–45127–01	33 – 19
	41 – 9
6BB–45152–01	33 – 30
6DA–45155–01	33 – 33
6C5–45155–02	33 – 33
63P–45181–02	33 – 17
6J9–45214–00	36 – 8
6J9–45215–00	36 – 9
65W–45251–00	1 – 15
	29 – 2
6AW–45251–00	1 – 15
	27 – 2
6FH–45300–03–NA	35 – 1
6FH–45300–13–NA	35 – 1
6J9–45301–07–NA	35 – 2
6E5–45318–00	33 – 25
6E5–45321–00	35 – 14
6E5–45331–00–9S	35 – 36
6J9–45332–00–CA	35 – 57
688–45341–10	35 – 7
6E5–45344–00	35 – 42
6J9–45371–01	1 – 17
	36 – 12
6CE–45373–00	1 – 17
	36 – 12
688–45375–00	35 – 11
663–45376–00	35 – 10
63P–45378–00	35 – 12
63P–45379–00	33 – 37
6G5–45383–01	35 – 67
6G5–45384–02	35 – 68
63P–45501–01	35 – 44
6DA–45501–10	35 – 44
61A–45527–00	35 – 23
6G5–45536–01	35 – 9
61A–45538–00	35 – 20
6DA–45551–00	35 – 45
6DA–45560–00	35 – 47
6G5–45567–01	35 – 5
6G5–45567–10	35 – 5
6G5–45567–20	35 – 5
6G5–45567–30	35 – 5
6G5–45567–40	35 – 5
6G5–45567–50	35 – 5

PART NO. N° PIECES	REF. NO.
6G5–45567–60	35 – 5
6DA–45571–00	35 – 59
6G5–45576–10	35 – 60
6G5–45577–02	35 – 64
6G5–45577–10	35 – 64
6G5–45577–20	35 – 64
6G5–45577–30	35 – 64
6G5–45577–40	35 – 64
6G5–45577–50	35 – 64
6G5–45577–60	35 – 64
6E5–45587–01	35 – 39
6E5–45587–10	35 – 39
6E5–45587–20	35 – 39
6E5–45587–30	35 – 39
6E5–45587–40	35 – 39
6E5–45587–50	35 – 39
6E5–45587–60	35 – 39
6J9–45611–01	35 – 48
6DA–45631–01	35 – 55
6E5–45633–01	35 – 56
6E5–45634–02	35 – 49
6CB–45930–11	36 – 22
6CB–45932–11	36 – 22
68F–45970–20	36 – 20
68F–45972–20	36 – 20
6CB–45974–11	36 – 22
68F–45974–20	36 – 20
68F–45976–20	36 – 20
68F–45978–20	36 – 20
63P–45987–00	36 – 14
60X–45987–10	36 – 14
60X–45995–00	36 – 15
688–45997–01	36 – 16
6CE–45C81–10	36 – 21
6Y8–48277–00	38 – 16
6E5–48344–00	26 – 5
	26 – 39
6DA–48531–00	26 – 1
6E5–48538–00	26 – 3
6E5–61350–02	37 – 1
6E5–61351–01	37 – 2
6E5–61355–00	37 – 5
6DA–8132G–01	16 – 19
6DA–81337–01	16 – 12
6DA–81410–00	16 – 3
6DA–81639–01	17 – 18
6CB–81800–02	22 – 1
69J–81801–11	22 – 5

PART NO. N° PIECES	REF. NO.
6CB–81807–00	22 – 8
6CB–81809–00	22 – 14
67F–81810–00	22 – 3
67F–81813–00	22 – 6
6CB–81820–00	22 – 7
67F–81821–00	22 – 11
6DA–81822–00	21 – 6
6CB–81826–00	22 – 22
69J–81828–00	22 – 23
67F–81830–00	22 – 16
6CB–81832–00	22 – 9
6CB–81836–00	22 – 10
6C5–81839–00	22 – 19
67F–8183R–00	22 – 13
60V–8183T–00	22 – 17
6P2–8183X–00	18 – 5
69J–81840–11	22 – 4
67F–81841–00	22 – 12
6CB–81842–00	22 – 18
67F–81846–00	22 – 24
67F–81850–00	22 – 2
6C5–81869–00	22 – 21
67F–81891–00	22 – 15
6DA–81919–11	17 – 35
60V–81925–00	21 – 4
6C5–81941–01	22 – 20
6DA–81942–01	18 – 11
6DA–81948–01	17 – 5
69J–81949–03	20 – 21
63P–81950–00	18 – 4
6DA–81952–10	17 – 11
6DA–81960–10	18 – 1
6DA–81975–01	18 – 2
6EE–81994–40	16 – 28
6EE–81994–50	16 – 29
6AH–81996–00	23 – 34
6DA–82105–02	18 – 22
6P2–82113–00	17 – 30
6E5–82148–00	27 – 5
	27 – 8
	29 – 4
	29 – 11
66K–82149–00	29 – 25
6DA–82149–00	27 – 24
6CB–82151–00	17 – 24
6CB–82151–10	17 – 25
6CB–82151–20	17 – 26
6CB–82151–30	17 – 27

PART NO. N° PIECES	REF. NO.
6CB–82151–41	17 – 23
6DA–82170–12	17 – 22
63P–82181–20	32 – 5
6CB–82310–02	19 – 5
6DA–82314–01	19 – 7
6A0–82317–01	16 – 15
6DA–82388–00	18 – 16
	21 – 9
6DA–82389–00	18 – 17
6D8–82389–01	19 – 1
6DA–82398–01	16 – 23
6Y8–82509–10	38 – 8
6Y8–82521–11	38 – 15
6DA–8252U–01	17 – 20
6DA–82553–00	20 – 9
6P2–82560–01	18 – 13
69J–82563–01	20 – 12
6DA–8257V–00	17 – 32
68F–82582–00	21 – 5
6DA–82582–00	20 – 2
6DA–82582–10	20 – 3
6Y8–82582–11	20 – 4
69J–82587–01	20 – 14
6E9–82588–00	18 – 14
61A–82588–01	26 – 10
6DA–82590–22	20 – 1
69J–8259F–00	26 – 9
60V–8259F–01	26 – 31
6DA–8259M–10	20 – 8
63P–825E0–02	39 – 1
6X4–83383–00	38 – 5
6X4–83386–00	38 – 6
6E5–83558–00	33 – 34
6DA–83614–00	20 – 16
63P–83614–01	20 – 15
6AW–83651–01	20 – 11
6DA–8366G–00	25 – 15
67H–83672–02	28 – 3
	30 – 3
68F–83688–10	9 – 15
6Y8–8454G–00	38 – 11
6P2–85075–00	19 – 10
68F–85119–00	17 – 9
	17 – 14
60V–85516–00	10 – 21
68F–85516–01	17 – 7
	17 – 12
6CB–85544–10	17 – 28

PART NO. N° PIECES	REF. NO.
689–85547–01	14 – 1
6DA–85548–10	17 – 15
6DA–85561–00	16 – 6
6CB–85580–00	16 – 5
6CJ–85780–01	20 – 18
6CB–85790–00	20 – 10
6P2–85896–00	19 – 9
6FH–8591A–12	17 – 1
6DA–85991–01	17 – 3
6C5–86120–00	10 – 31
6CB–86120–00	6 – 1
6Y8–86260–03	38 – 2
6AA–86261–01	38 – 3
6Y8–86267–00	38 – 1
6LH–87226–00	12 – 40
6DA–8A410–02	26 – 35
K0F–A3233–00	4 – 14
K0F–A3741–00	8 – 5
K0F–A3742–00	8 – 6
K0F–A3743–00	8 – 3
K0F–A3751–00	8 – 8
K0F–A3751–10	8 – 8
K0F–A3751–20	8 – 8
K0F–A3751–30	8 – 8
K0F–A3751–40	8 – 8
K0F–A3751–50	8 – 8
K0F–A3751–60	8 – 8
K0F–A3751–70	8 – 8
K0F–A3751–80	8 – 8
K0F–A3751–90	8 – 8
K0F–A3751–A0	8 – 8
K0F–A3751–B0	8 – 8
K0F–A3751–C0	8 – 8
K0F–A3751–D0	8 – 8
K0F–A3751–E0	8 – 8
K0F–A3751–F0	8 – 8
K0F–A3751–G0	8 – 8
K0F–A3751–H0	8 – 8
K0F–A3751–J0	8 – 8
K0F–A3751–K0	8 – 8
K0F–A3751–L0	8 – 8
K0F–A3751–M0	8 – 8
K0F–A3751–N0	8 – 8
K0F–A3751–P0	8 – 8
K0F–A3751–R0	8 – 8
K0F–A3751–S0	8 – 8
K0F–A3751–T0	8 – 8
K0F–A3753–00	8 – 8

PART NO. N° PIECES	REF. NO.
K0F–A3753–10	8 – 8
K0F–A3753–20	8 – 8
K0F–A3753–30	8 – 8
K0F–A3753–40	8 – 8
K0F–A3753–50	8 – 8
K0F–A3753–60	8 – 8
K0F–A3753–70	8 – 8
6DA–W0001–01	40 – 1
63P–W0001–22	41 – 1
61A–W0078–A4	1 – 19
	41 – 21
6DA–W009A–04–9S	5 – 1
6DA–W009B–14–9S	3 – 1
6CB–W1165–10	4 – 9
6LH–W1390–00	12 – 22
6DA–W4624–00	8 – 20
6DA–W8145–00	16 – 1
6EK–W9010–00	16 – 2
90101–06020	29 – 3
90101–12065	27 – 40
	29 – 30
90101–12066	27 – 40
	29 – 30
90101–14005	30 – 21
90105–06028	3 – 5
	6 – 10
	6 – 26
	6 – 34
90105–06035	6 – 3
90105–06037	6 – 49
90105–06054	10 – 3
90105–06151	5 – 21
	6 – 44
90105–06196	3 – 34
90105–06M07	5 – 14
	6 – 21
90105–06M08	10 – 11
	10 – 14
90105–08175	3 – 22
	5 – 20
90105–08M87	21 – 8
90105–10406	3 – 17
	3 – 21
90105–10M00	36 – 13
90105–14009	28 – 27
	30 – 30
90105–14012	28 – 21
90109–08019	26 – 33

PART NO. N° PIECES	REF. NO.
90111–06142	24 – 4
90111–06144	24 – 3
90111–08078	2 – 4
90119–06078	6 – 39
90119–06276	3 – 14
90119–06286	35 – 17
90119–06287	33 – 38
90119–06291	16 – 18
90119–06297	26 – 38
90119–06299	10 – 12
90119–06309	10 – 20
	10 – 35
	14 – 15
90119–06MA3	3 – 26
	6 – 17
90119–07001	5 – 7
90119–07234	5 – 8
90119–08020	9 – 14
90119–08182	33 – 2
90119–08187	23 – 21
90119–08189	33 – 5
90119–08191	35 – 35
	41 – 29
90119–08M66	3 – 18
90119–10007	33 – 23
90119–10024	28 – 26
	30 – 29
90119–10050	8 – 14
90119–10054	27 – 18
	29 – 19
90119–10058	28 – 24
	30 – 27
90119–10072	36 – 7
90119–10M07	8 – 22
90149–11001	5 – 19
90151–05M05	6 – 6
90152–05M08	36 – 10
90159–05059	28 – 2
	30 – 2
	39 – 3
90159–06053	24 – 9
90159–06M28	24 – 3
90167–06M00	38 – 12
90169–05M00	17 – 21
	18 – 12
90170–16M01	35 – 46
90171–18M04	36 – 18
90173–06001	24 – 7

PART NO. N° PIECES	REF. NO.
90176–14002	30 – 23
90179–08003	21 – 3
90183–061A8	24 – 8
90185–05002	36 – 11
90185–09M01	37 – 6
90185–14M00	28 – 31
	30 – 34
90185–22M11	27 – 15
	29 – 16
90201–06M30	38 – 13
90201–10060	27 – 17
	29 – 18
90201–10M20	37 – 7
90201–12426	27 – 42
	29 – 32
90201–13M01	27 – 41
	29 – 31
90201–156J2	23 – 11
90201–15M58	28 – 20
	30 – 20
90201–16M01	28 – 28
	30 – 31
90201–16M55	28 – 19
	30 – 19
90201–186F1	6 – 36
	40 – 15
90201–22M01	35 – 21
90201–26M59	27 – 14
	29 – 15
90201–30M92	35 – 65
90201–35008	28 – 17
	30 – 17
90201–38M60	28 – 9
	30 – 9
90202–08M20	26 – 14
90202–16061	26 – 21
	36 – 4
90202–32M19	28 – 18
	30 – 18
90202–40M47	28 – 12
	30 – 12
90206–15M18	23 – 12
90206–22M19	35 – 22
90249–06M19	27 – 31
90250–08M07	35 – 54
90269–07003	23 – 27
90280–04M05	35 – 31
	41 – 30

PART NO. N° PIECES	REF. NO.
90282–04M00	35 – 66
90338–25004	3 – 12
90340–08002	35 – 6
90340–14M06	5 – 9
	34 – 6
90340–18M09	6 – 35
90344–51019	5 – 4
90386–06M12	26 – 17
90386–10M16	27 – 29
90386–12069	26 – 30
90386–15M73	23 – 10
90386–16M66	26 – 20
90386–22M98	27 – 20
	27 – 36
	29 – 21
	29 – 27
90386–25M31	27 – 13
	29 – 14
90386–38M32	28 – 11
	30 – 11
90387–05004	39 – 4
90387–06176	17 – 8
	17 – 13
90387–06263	34 – 9
90387–06283	10 – 1
90387–06289	10 – 22
	10 – 34
	14 – 17
90387–06M43	24 – 11
90387–06M69	16 – 17
90387–07028	24 – 6
90387–08M37	23 – 20
90387–08M45	2 – 7
90387–10094	2 – 5
90387–10M05	27 – 32
90387–10M61	37 – 3
90387–11005	5 – 18
90387–14004	28 – 35
	30 – 38
90430–06M03	5 – 15
	6 – 22
90430–08003	1 – 16
	35 – 8
	41 – 11
90430–14115	5 – 10
	40 – 2
90430–14M09	1 – 7
	34 – 7

PART NO. N° PIECES	REF. NO.
90430–14M09	41 – 3
90445–07010	33 – 36
90445–07018	33 – 36
90445–09008	7 – 4
90445–09120	11 – 3
90445–10056	11 – 8
90445–10057	7 – 14
90445–23002	36 – 2
90462–12013	25 – 19
90464–07M41	11 – 2
90464–09008	18 – 21
90464–09020	7 – 10
90464–09130	10 – 26
	16 – 21
	16 – 25
90464–09142	7 – 9
90464–09M21	7 – 5
90464–09M31	7 – 12
90464–10011	11 – 17
90464–11121	10 – 24
90464–12002	16 – 4
90464–12010	7 – 8
	13 – 3
90464–12089	18 – 9
90464–12183	9 – 10
	9 – 22
	17 – 6
	18 – 8
90464–13013	13 – 19
90464–13249	18 – 20
	19 – 4
	25 – 13
90464–13260	13 – 18
90464–15007	13 – 5
90464–16001	11 – 12
	11 – 25
	11 – 26
90464–16003	13 – 4
90464–18004	11 – 24
	13 – 17
	25 – 18
90464–18246	18 – 10
	25 – 17
90464–20181	6 – 38
	9 – 21
	13 – 1
	16 – 22
	17 – 16

PART NO. N° PIECES	REF. NO.
90464–20181	18 – 19
	19 – 3
	21 – 10
90464–20258	23 – 31
90464–21256	25 – 9
90464–26001	20 – 19
90464–28003	20 – 20
90464–32002	17 – 34
90464–99004	9 – 8
90465–08M63	13 – 6
	27 – 22
	29 – 23
90465–08M83	7 – 16
90465–11M10	7 – 7
	10 – 25
	11 – 4
	11 – 5
	11 – 9
	13 – 14
	13 – 16
	14 – 5
	14 – 20
	25 – 3
	25 – 10
	27 – 16
	28 – 5
	29 – 17
	30 – 5
	33 – 35
	38 – 10
	39 – 5
90465–11M59	6 – 27
	6 – 51
	20 – 7
90465–13M97	16 – 9
90467–09M09	11 – 10
90467–120A7	13 – 9
90467–140A9	13 – 10
90467–141A2	13 – 13
90468–18008	26 – 6
	26 – 15
	26 – 40
90480–12314	10 – 2
	16 – 14
	19 – 8
90480–13163	23 – 28
90480–13M24	24 – 10
90480–14031	10 – 33

PART NO. N° PIECES	REF. NO.
90480–15013	14 – 16
90480–16009	24 – 5
90480–16025	16 – 13
90480–20M05	6 – 13
90480–22M81	23 – 19
90501–12082	26 – 27
90501–16M11	6 – 12
90501–16M37	35 – 50
90506–16003	27 – 34
90506–18025	8 – 23
90506–22001	23 – 16
90508–20M31	26 – 29
90560–12M01	37 – 4
91312–04020	31 – 57
91312–05035	31 – 63
91380–06025	31 – 67
91490–40030	36 – 19
91609–16010	31 – 11
91690–30010	26 – 4
	26 – 25
91690–30020	27 – 33
91690–40010	3 – 10
	3 – 27
91809–08006	5 – 6
91814–18002	3 – 3
92903–08100	18 – 25
92990–06100	2 – 10
92990–08600	2 – 6
92990–18200	36 – 17
92995–05100	9 – 17
92995–05600	9 – 18
92995–14600	28 – 33
	30 – 24
	30 – 36
93101–28M16	35 – 37
	41 – 17
93101–30M17	35 – 62
	41 – 19
93102–38008	8 – 19
	40 – 20
93102–85008	4 – 4
	40 – 19
93106–09014	35 – 16
	41 – 13
93106–19001	31 – 5
93210–04279	38 – 9
93210–064A5	31 – 40
	31 – 50

PART NO. N° PIECES	REF. NO.
93210–07003	35 – 13
	41 – 10
93210–07N51	31 – 47
93210–08001	3 – 30
	40 – 18
93210–09165	26 – 19
	31 – 16
93210–11N52	31 – 21
93210–12327	31 – 35
93210–12648	3 – 16
	40 – 10
93210–12N52	31 – 38
93210–13M63	6 – 7
	23 – 29
	40 – 11
93210–16275	37 – 9
93210–19MJ3	34 – 21
	40 – 24
93210–24M79	6 – 46
	40 – 25
93210–25552	3 – 11
	34 – 18
	40 – 7
	40 – 22
93210–25647	3 – 13
	40 – 8
93210–29375	31 – 28
93210–357A3	6 – 48
	40 – 26
93210–37160	35 – 27
	41 – 15
	41 – 24
93210–37MH7	28 – 10
	30 – 10
93210–55M14	35 – 41
	41 – 18
93210–58144	35 – 15
	41 – 12
93210–68N50	31 – 14
93210–86M38	35 – 26
	41 – 14
	41 – 23
93210–97M55	35 – 63
	41 – 20
93306–209U0	35 – 58
93311–928U5	35 – 3
93315–43061	35 – 61
93317–330U2	35 – 38

PART NO. N° PIECES	REF. NO.
93332–000V3	35 – 4
93341–930V2	35 – 40
93410–16006	26 – 22
93410–22M11	27 – 37
	29 – 28
93410–37M04	28 – 14
	30 – 14
93420–36M01	33 – 26
93501–04M02	26 – 26
93501–08001	31 – 49
	31 – 58
93503–16003	31 – 43
	35 – 53
93505–32038	31 – 64
93507–32009	35 – 51
93511–32017	35 – 52
93604–10011	31 – 56
93605–10108	8 – 10
	8 – 12
93606–12019	4 – 3
	5 – 5
	35 – 34
	41 – 28
93606–19M23	33 – 15
93608–16M16	33 – 4
	33 – 24
	34 – 4
	36 – 5
93700–06002	27 – 10
	27 – 23
	29 – 24
93700–06M01	26 – 32
93700–06M03	26 – 34
94702–00400	1 – 18
	5 – 25
95022–06035	16 – 10
95333–08600	18 – 24
95380–06600	2 – 11
	10 – 32
	24 – 4
95380–12600	27 – 43
	29 – 33
95604–14200	28 – 22
95780–06300	38 – 14
95780–08300	2 – 8
95780–10300	28 – 7
	30 – 7
95812–06025	34 – 11

PART NO. N° PIECES	REF. NO.
95D75–06025	9 – 4
	9 – 6
95D75–08035	17 – 4
95D95–06010	13 – 7
	27 – 38
	27 – 39
	29 – 29
95D95–06012	7 – 17
	9 – 20
	10 – 19
	14 – 18
	18 – 15
	19 – 2
	20 – 17
	23 – 18
	25 – 14
	25 – 16
	25 – 20
95D95–06014	23 – 4
95D95–06016	10 – 29
	16 – 20
	16 – 24
	17 – 10
	18 – 18
	21 – 11
	34 – 22
95D95–06020	10 – 5
	17 – 2
	17 – 19
95D95–06025	14 – 7
	19 – 6
95D95–06030	5 – 24
	16 – 11
95D95–06040	25 – 24
95D95–06065	25 – 22
95D95–08012	23 – 15
95D95–08016	18 – 23
95D95–08020	26 – 2
95D95–08025	5 – 16
97513–08545	21 – 2
97595–05520	16 – 8
97602–04316	32 – 9
97780–50620	17 – 31
97780–60520	25 – 11
97780–60620	17 – 17
	17 – 33
	38 – 7
97880–06035	38 – 12

PART NO. N° PIECES	REF. NO.
97885–05016	9 – 16
97885–06010	29 – 7
	29 – 10
97980–06216	33 – 28
	38 – 4
97985–04116	26 – 11
97985–04308	20 – 6
97985–06212	27 – 9
	29 – 12
97985–06216	28 – 4
	30 – 4
97D95–06012	33 – 31
97E75–06516	8 – 25
97E75–06535	26 – 24
97E75–06540	34 – 17
97E75–08535	33 – 14
	34 – 3
97E75–08540	6 – 23
97E75–08560	9 – 2
	33 – 11
97E75–10535	33 – 6
97E75–10545	33 – 3
97E95–06510	27 – 6
	29 – 5
97E95–06512	27 – 26
97E95–06516	20 – 5
	21 – 1
	39 – 2
97E95–06520	18 – 7
	19 – 11
97E95–06530	27 – 4
97E95–06535	18 – 3
97E95–06550	26 – 12
97E95–06610	18 – 6
97E95–08520	27 – 12
97E95–08525	35 – 43
97E95–10645	36 – 6
98507–04008	12 – 34
98780–04016	3 – 9
	3 – 28
99001–08600	35 – 19
99530–08012	16 – 7
99590–10114	21 – 7