YAMAHA

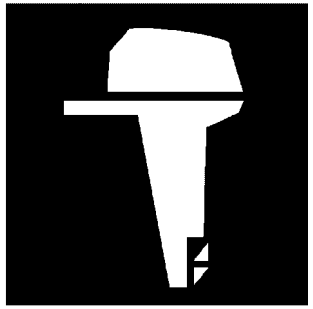

PARTS CATALOGUE
CATALOGUE DE PIECES DETACHEES

F350SA
LF350SA

YAMAHA
GENUINE
Parts & Accessories

1Y6ML-300FA

( )

F350SA/LF350SA
PARTS CATALOGUE
©2023 by Yamaha Motor Co., Ltd.
1st edition, December 2023
All rights reserved.
Any reprinting or unauthorized use
without the written permission of
Yamaha Motor Co., Ltd.
is expressly prohibited.
Printed in Japan.

F350SA/LF350SA
CATALOGUE DE PIECES DETACHEES
©2023 par Yamaha Motor Co., Ltd.
1re édition, décembre 2023
Tous droits réservés
Toute réimpression ou utilisation
non autorisée sans la permission écrite
de la Yamaha Motor Co., Ltd.
est formellement interdite.
Imprimé au Japon

FOREWORD

This Parts Catalogue is related to the parts for the model(s) on the cover page. When you are ordering replacement parts, please refer to this Parts Catalogue and quote both part numbers and part names correctly.

1. Modifications or additions which have been made after the issue of the Parts Catalogue will be announced in the Parts News.
   It is advisable that you make the necessary corrections to the Parts Catalogue according to the Parts News.

2. Abbreviations
   The following abbreviations are used in this Parts Catalogue.
   "UR" Use specified parts number.
   "UN" Use as many as needed.
   "AP" Alternate Parts
   "LM" Locally Made (Parts need to be ordered locally)
   "F#" Frame No. (Applicable machine No.)
   "O/S" Over Size

3. The number of components for assembly
   - Parts, which are to be supplied in an assembly, are listed with a dot (.) in front of the part name as shown below.
   - The numeral appearing to the right of each component part indicates the quantity of parts for each assembly unit.

PART NO.	DESCRIPTION	Q'TY	REMARKS
2F5–83310–60	FRONT FLASHER LIGHT ASSY	2	
115–83311–60	.BULB (6V–18W)	1	

4. Applicable colours of graphics are represented in the "REMARKS" as shown below.

PART NO.	DESCRIPTION	Q'TY	REMARKS
2N4–24110–00–X5	FUEL TANK COMP.	2	MXR
3J1–24240–10	.GRAPHIC, FUEL TANK	1	FOR MXR

5. Note that the illustrations for reference in finding parts numbers are not to be used for assembling. When assembling, please use the applicable service manual.

6. The asterisk (*) before a reference number indicates modified items after the first edition.

7. Applicable Serial No.
   Engine Serial No.

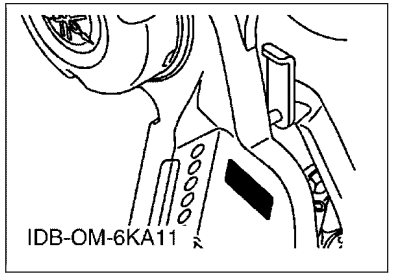

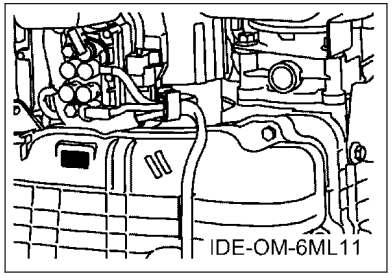

8. Applicable Engine Starting Serial No.

Model	Serial No.	Model	Serial No.
F350SA	6ML-1000001	LF350SA	6MM-1000001

9. Applicable Colour Code

Abbreviation	Colour Name	Colour Code
DBN1	DARK BLUISH GRAY 1	008D
WPA	WHITE PEARL A	00CE

10. Quantity Column Information

Column No.	Name Of Q'ty Column	Applicable Model
1	SA	F350SA2
2	NSA	F350NSA
3	NSA2	F350NSA2
4	6MM1	LF350SA2

AVANT–PROPOS

Ce catalogue de pièces détachées concerne les pièces pour le(s) modèle(s) indiqué(s) sur la page de couverture. Lorsque vous commandez des pièces de rechange, veuillez vous référer à ce catalogue de pieces détachées et indiquer clairement les numéros et les noms des pièces détachées.

1. Les modifications ou ajouts ayant été effectués après la parution du catalogue de pièces détachées seront décrits dans les Bulletins d'information concernant les pièces détachées.
   Il est recommandé que vous apportiez les corrections nécessaires au catalogue des pièces détachées en vous référant aux Bulletins d'information.

2. Abréviations
   Dans ce catalogue, les abréviations suivantes sont utilisées:
   "UR" Utiliser le numéro de pièces spécifié.
   "UN" Utiliser autant que nécessaire.
   "AP" Pièces de substitution
   "LM" Fabrication locale (les pièces doivent être commandées localement.)
   "F#" N° de cadre (applicable au N° de série)
   "O/S" Surdimensionné

3. Nombre de pièces d'un assemblage
   - Les pièces fournies comme composants d'un assemblage sont précédées d'un point (.) de la manière indiquée ci–dessous.
   - Le chiffre apparaissant à la droite de chaque composant indique la quantité de pièces pour chaque unité d'assemblage.

N° PIECES	DESCRIPTION	QTE	REMARQUES
2F5–83310–60	ENS. CLIGNOTANT AVANT	2	
115–83311–60	.AMPOULE (6V–18W)	1	

4. Les couleurs concernant les graphiques sont indiquées dans la colonne "REMARQUES", comme indiqué ci–dessous.

N° PIECES	DESCRIPTION	QTE	REMARQUES
2N4–24110–00–X5	RESERVOIR A ESSENCE.	2	MXR
3J1–24240–10	.GRAPHIQUE	1	POUR MXR

5. Veuillez noter que les illustrations sont indiquées à titre de référence pour trouver les numéros de pièces, non pour être utilisées lors de l'assemblage. Lors de l'assemblage, veuillez utiliser le manuel d'entretien adéquat.

6. L'astérisque (*) placé devant un numéro de référence indique des éléments qui ont été modifiés après la première édition.

7. N° de série applicable
   N° de Série du moteur

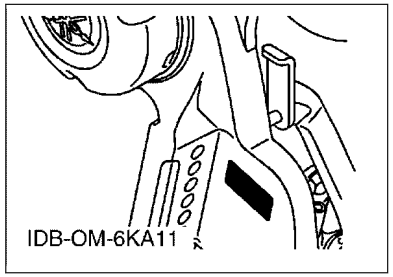

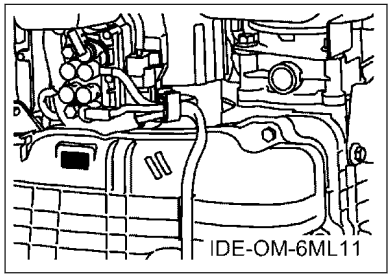

8. N° de série initial du moteur applicable

Modèle	N° de série	Modèle	N° de série
F350SA	6ML-1000001	LF350SA	6MM-1000001

9. Code couleur applicable

Abréviation	Nom de la couleur	Code couleur
DBN1	DARK BLUISH GRAY 1	008D
WPA	WHITE PEARL A	00CE

10. Informations relatives à la colonne Quantité

N° de la colonne	Nom de la colonne Qté	Modèle applicable
1	SA	F350SA2
2	NSA	F350NSA
3	NSA2	F350NSA2
4	6MM1	LF350SA2

CONTENTS

SCHEDULED SERVICE PARTS....1
TOP COWLING....2
CYLINDER & CRANKCASE 1....4
CRANKSHAFT & PISTON....6
CYLINDER & CRANKCASE 2....8
CYLINDER & CRANKCASE 3....10
CYLINDER & CRANKCASE 4....11
VALVE....12
INTAKE 1....15
INTAKE 2....17
THROTTLE BODY ASSY 1....18
THROTTLE BODY ASSY 2....19
FUEL INJECTION PUMP 1....20
FUEL INJECTION PUMP 2....22
FUEL 1....23
FUEL 2....25
GENERATOR....26
ELECTRICAL 1....28
ELECTRICAL 2....30
ELECTRICAL 3....31
ELECTRICAL 4....33
ELECTRICAL 5....34
STARTING MOTOR....35
BOTTOM COWLING 1....36
BOTTOM COWLING 2....38
BOTTOM COWLING 3....40
BOTTOM COWLING 4....41
CONTROL....42
BRACKET 1....44
BRACKET 2....46
BRACKET 3....47
BRACKET 4....48
POWER TRIM & TILT ASSY 1....50
POWER TRIM & TILT ASSY 2....54
UPPER CASING....55
OIL PAN....57
LOWER CASING & DRIVE 1....58
LOWER CASING & DRIVE 2....62
LOWER CASING & DRIVE 3....64
LOWER CASING & DRIVE 4....68
OPTIONAL PARTS 1....70
OPTIONAL PARTS 2....71
OPTIONAL PARTS 3....72
OPTIONAL PARTS 4....77
OPTIONAL PARTS 5....81
OPTIONAL PARTS 6....83
REPAIR KIT 1....85
REPAIR KIT 2....86

INDEX

NUMERICAL INDEX....88

TABLE DES MATIERES

PIECES MAINTENANCE PERIODIQUE.....1
CAPOT SUPERIEUR..... 2
CYLINDRE & CARTER 1..... 4
VILEBREQUIN & PISTON.....6
CYLINDRE & CARTER 2..... 8
CYLINDRE & CARTER 3..... 10
CYLINDRE & CARTER 4..... 11
SOUPAPE..... 12
ADMISSION 1.....15
ADMISSION 2.....17
CARTER D'ACCELERATEUR 1.....18
CARTER D'ACCELERATEUR 2.....19
POMPE A INJECTEUR 1..... 20
POMPE A INJECTEUR 2..... 22
CARBURANT 1..... 23
CARBURANT 2..... 25
GENERATRICE.....26
PARTIE ELECTRIQUE 1.....28
PARTIE ELECTRIQUE 2.....30
PARTIE ELECTRIQUE 3.....31
PARTIE ELECTRIQUE 4.....33
PARTIE ELECTRIQUE 5.....34
DEMARREUR ELECTRIQUE.....35
CAPOT INFERIEUR 1.....36
CAPOT INFERIEUR 2.....38
CAPOT INFERIEUR 3.....40
CAPOT INFERIEUR 4.....41
COMMANDE..... 42
SUPPORT 1..... 44
SUPPORT 2..... 46
SUPPORT 3..... 47
SUPPORT 4..... 48
PUISSANCE PARER ET INCLINER 1..... 50
PUISSANCE PARER ET INCLINER 2..... 54
FOURREAU.....55
VENTILATEUR D'HUILE..... 57
BOITIER D'HELICE TRANSMISSION1.....58
BOITIER D'HELICE TRANSMISSION2.....62
BOITIER D'HELICE TRANSMISSION3.....64
BOITIER D'HELICE TRANSMISSION4.....68
PIECES OPTIONNELLES 1..... 70
PIECES OPTIONNELLES 2..... 71
PIECES OPTIONNELLES 3..... 72
PIECES OPTIONNELLES 4..... 77
PIECES OPTIONNELLES 5..... 81
PIECES OPTIONNELLES 6..... 83
KITS DE REPARATION 1..... 85
KITS DE REPARATION 2..... 86

INDEX

INDEX NUMERIQUE.....88

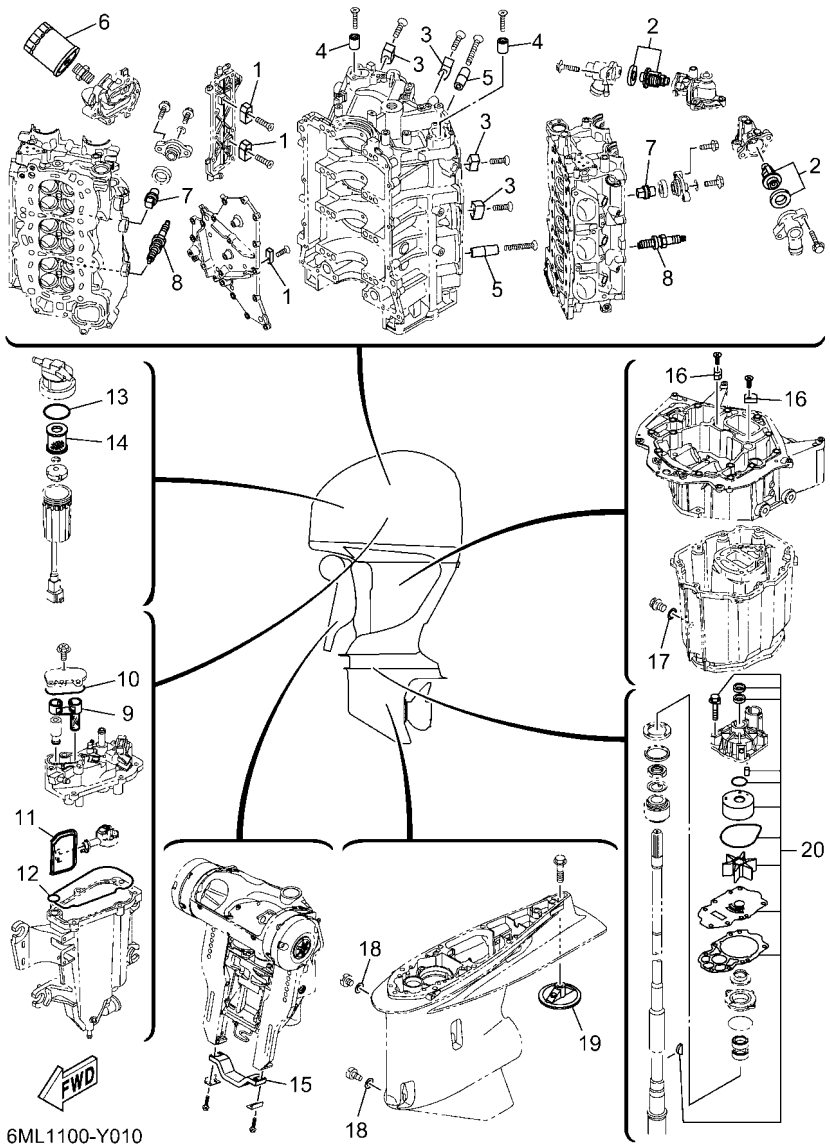

FIG. 1 SCHEDULED SERVICE PARTS — PIECES MAINTENANCE PERIODIQUE

REF. NO.	PART NO. N° PIECES	DESCRIPTION DESCRIPTION	SA	NSA	NSA2	6MM1		REMARKS REMARQUES
1	63P–11325–01	ANODE ANODE	3	3	3	3		
2	6CE–12411–10	THERMOSTAT THERMOSTAT	2	2	2	2		
3	6AW–1132P–00	ANODE 5 ANODE 5	4	4	4	4		
4	68T–11325–00	ANODE ANODE	2	2	2	2		
5	6AW–1132N–01	ANODE 4 ANODE 4	2	2	2	2		
6	N26–13440–03	ELEMENT ASSY, OIL CLEANER ELEMENT, FILTRE A HUILE	1	1	1	1		
7	6ML–11325–00	ANODE ANODE	8	8	8	8		
8	94702–00442	PLUG, SPARK (NGK ILMAR7E9) BOUGIE D,ALLUMAGE (NGK ILMAR7E	6	6	6	6		
9	6CB–24501–01	FILTER, FUEL FILTRE	1	1	1	1		
10	6CB–13016–00	O-RING JOINT TORIQUE	1	1	1	1		
11	6LH–13915–00	FILTER FILTRE	1	1	1	1		
12	6CB–14984–00	GASKET, FLOAT CHAMBER JOINT, CUVE DE FLOTTEUR	1	1	1	1		
13	6P3–24564–00	GASKET JOINT	1	1	1	1		
14	6P3–24563–02	ELEMENT, FILTER ELEMENT, FILTRE	1	1	1	1		
15	6G5–45251–02	ANODE ANODE	1	1	1	1		
16	63P–11325–11	ANODE ANODE	2	2	2	2		
17	90430–14M09	GASKET JOINT	1	1	1	1		
18	90430–08003	GASKET JOINT	2	2	2	2		
19	6CE–45373–00	ANODE ANODE	1	1	1	1		
20	6CE–W0078–02	WATER PUMP REPAIR KIT KIT DE REPARATION DE LA POMPE	1	1	1	1		

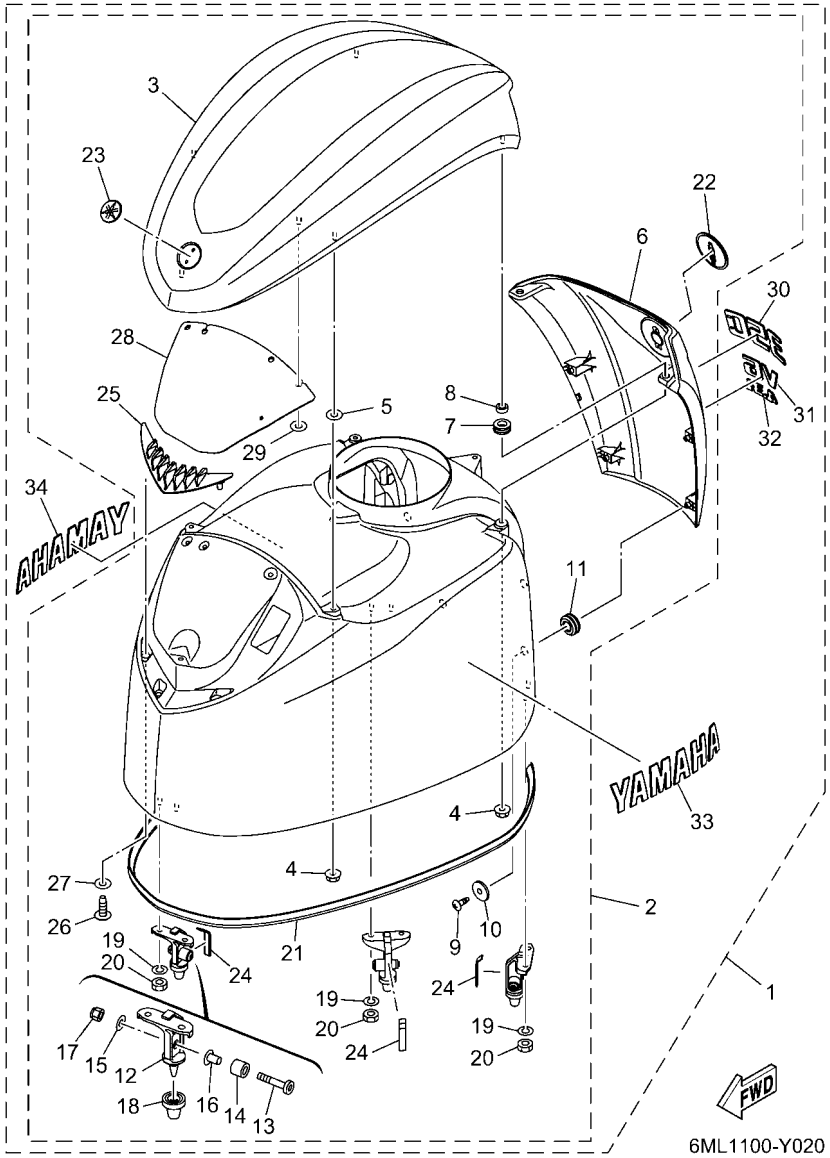

FIG. 2 TOP COWLING — CAPOT SUPERIEUR

REF. NO.	PART NO. N° PIECES	DESCRIPTION DESCRIPTION	SA	NSA	NSA2	6MM1		REMARKS REMARQUES
1	6ML–42610–00–8D	TOP COWLING ASSY CAPOT (ENS.)		1				GRAY GRAY
	6ML–42610–00–CE	TOP COWLING ASSY CAPOT (ENS.)	1		1	1		WHITE WHITE
2	6ML–4261A–00–8D	.TOP COWLING W/O GRAPHICS .CAPOT SUPERIEUR SANS GRAPHIQUE		1				GRAY GRAY
	6ML–4261A–00–CE	.TOP COWLING W/O GRAPHICS .CAPOT SUPERIEUR SANS GRAPHIQUE	1		1	1		WHITE WHITE
3	6ML–42613–00–8D	..MOLDING, AIR DUCT ..MANCHON A AIR		1				GRAY GRAY
	6ML–42613–00–CE	..MOLDING, AIR DUCT ..MANCHON A AIR	1		1	1		WHITE WHITE
4	90179–06M28	..NUT ..ECROU	6	6	6	6		
5	6CB–42545–00	..WASHER, PLAIN ..RONDELLE, PLATE	3	3	3	3		
6	6KA–42625–00–8D	..PANEL, REAR ..PANNEAU		1				GRAY GRAY
	6KA–42625–00–CE	..PANEL, REAR ..PANNEAU	1		1	1		WHITE WHITE
7	90480–13004	..GROMMET ..PASSE-FIL	2	2	2	2		
8	90387–07054	..COLLAR ..COLLERETTE	2	2	2	2		
9	97780–50016	..SCREW, TAPPING ..VIS, TETE BOMBEE	4	4	4	4		
10	90201–053R1	..WASHER, PLATE ..RONDELLE, PLATE	4	4	4	4		
11	90480–16009	..GROMMET ..PASSE-FIL	4	4	4	4		
12	6CB–42647–A0	..HOLDER, CLAMP BAND ..SUPPORT, SANDOW DE SERRAGE	3	3	3	3		
13	90111–08078	..BOLT, HEXAGON SOCKET BUTTON ..BOULON	3	3	3	3		
14	90387–10094	..COLLAR ..COLLERETTE	3	3	3	3		
15	92990–08600	..WASHER, PLATE ..RONDELLE, PLATE	3	3	3	3		
16	90387–08M45	..COLLAR ..COLLERETTE	3	3	3	3		
17	95780–08300	..NUT, FLANGE ..ECROU	3	3	3	3		
18	6AW–42663–01	..DAMPER 2 ..AMORTISSEUR 2	3	3	3	3		
19	92990–06100	..WASHER, SPRING ..RONDELLE, GROWER	6	6	6	6		
20	95380–06600	..NUT, HEXAGON ..ECROU	6	6	6	6		
21	6CB–42628–00	..SEAL ..JOINT	1	1	1	1		
22	6KN–42697–00	..TUNING FORK MARK ..MARQUE, YAMAHA	1	1	1	1		
23	6LB–42697–00	..TUNING FORK MARK ..MARQUE, YAMAHA	1	1	1	1		

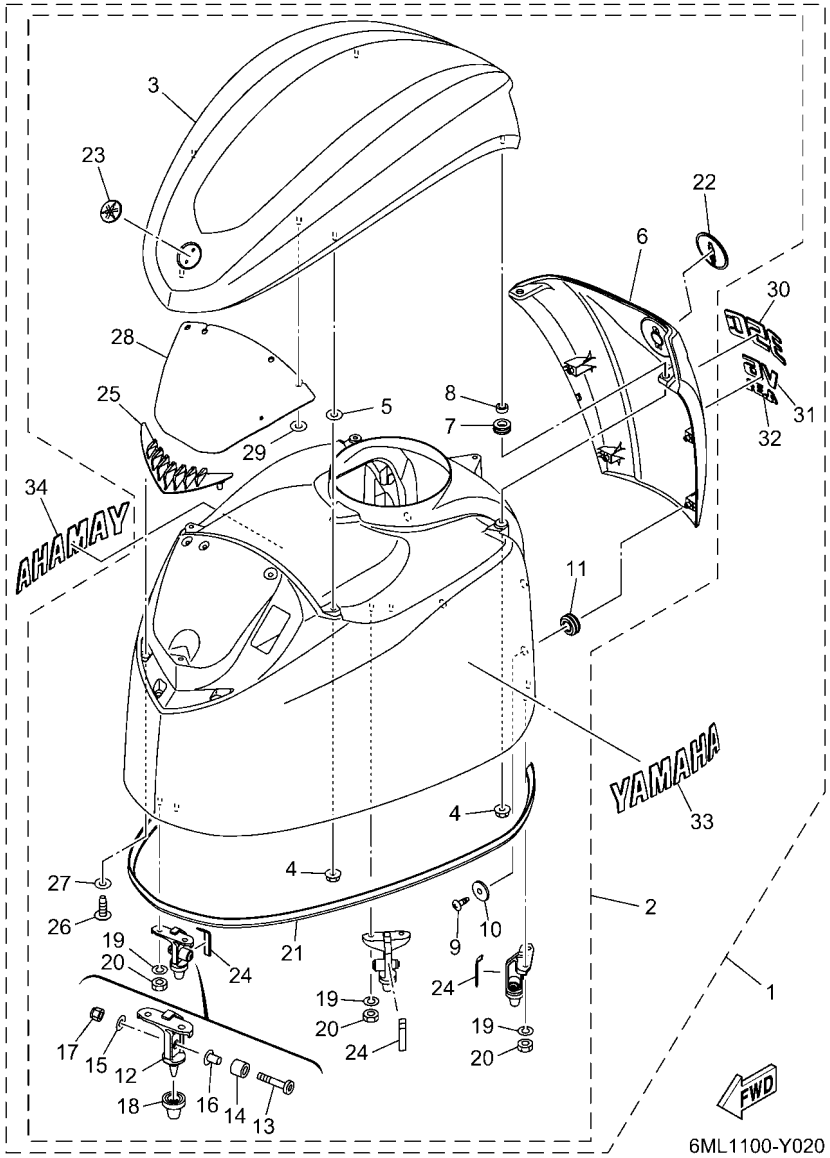

FIG. 2 TOP COWLING — CAPOT SUPERIEUR

REF. NO.	PART NO. N° PIECES	DESCRIPTION DESCRIPTION	SA	NSA	NSA2	6MM1		REMARKS REMARQUES
24	6CB–42134–01	..COVER ..CAPOT	3	3	3	3		
25	6ML–42626–00	..LOUVER, 1 ..PLAQUE INSONOR.	1	1	1	1		
26	97780–50016	..SCREW, TAPPING ..VIS, TETE BOMBEE	3	3	3	3		
27	6CB–42545–00	..WASHER, PLAIN ..RONDELLE, PLATE	3	3	3	3		
28	6ML–21266–00	..SHEET 1 ..FEUILLE 1	1	1	1	1		
29	90183–05M06	..NUT, SPRING ..ECROU, RESSORT	1	1	1	1		
30	6ML–42678–00	.GRAPHIC, REAR .ADHESIF, ARRIERE	1	1	1	1		
31	6KA–4267A–00	.GRAPHIC, REAR 2 .ADHESIF, ARRIERE 2	1	1	1	1		
32	6ML–42682–00	.MARK, COWLING .ADHESIF, CAPOT	1	1	1	1		
33	6KA–2153A–00	.EMBLEM, YAMAHA .EMBLEME, YAMAHA	1	1	1	1		
34	6KA–2153B–00	.EMBLEM, YAMAHA .EMBLEME, YAMAHA	1	1	1	1		

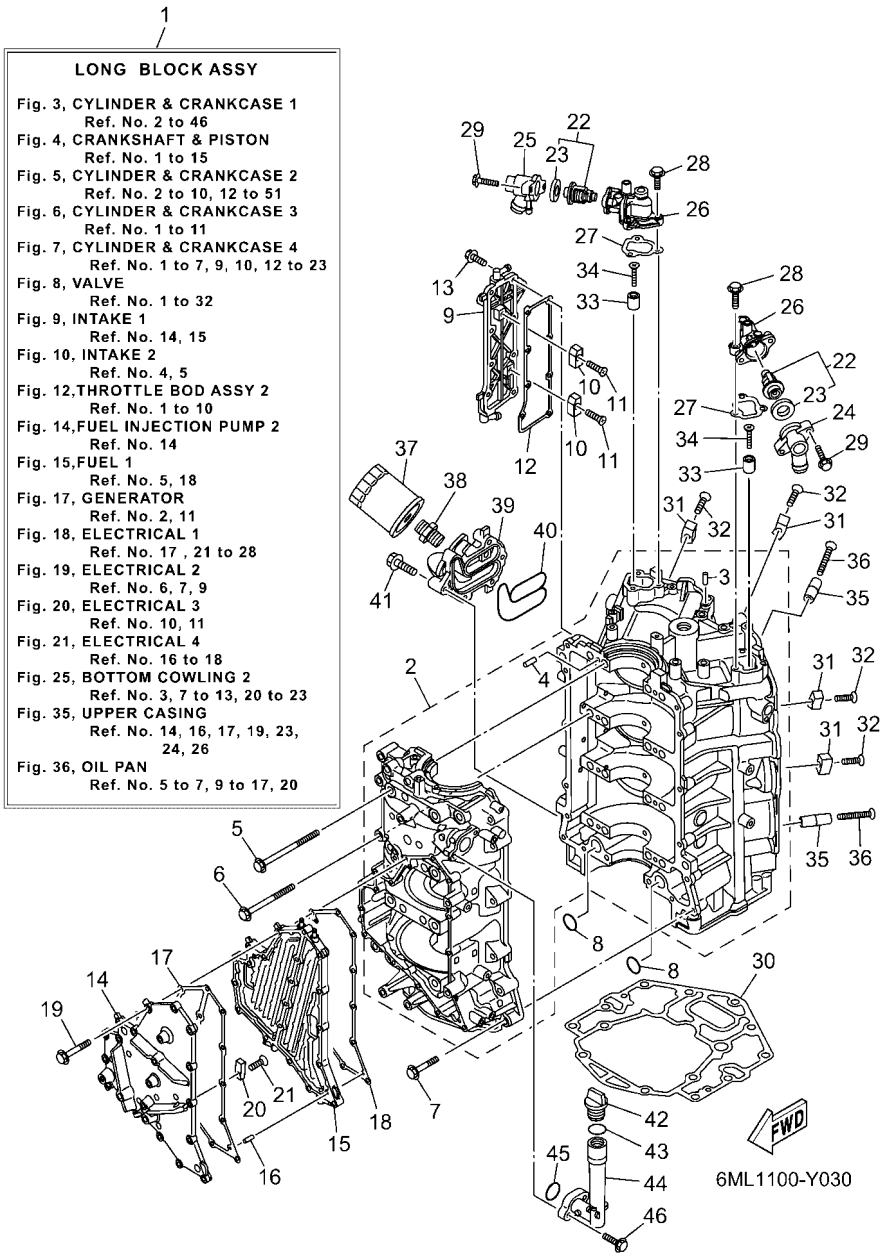

FIG. 3 CYLINDER & CRANKCASE 1 — CYLINDRE & CARTER 1

REF. NO.	PART NO. N° PIECES	DESCRIPTION DESCRIPTION	SA	NSA	NSA2	6MM1		REMARKS REMARQUES
1	6ML–11000–00	LONG BLOCK ASSY SOUS-ASSEMBLEE DU MOTEUR	1	1	1	1		
2	6ML–W1510–00	CRANKCASE ASSY CARTER DE MOTEUR COMPLET	1	1	1	1		
3	93606–12019	.PIN, DOWEL .GOUPILLE	3	3	3	3		
4	93606–12019	.PIN, DOWEL .GOUPILLE	8	8	8	8		
5	6CB–15187–00	BOLT BOULON	8	8	8	8		
6	6CB–15481–00	BOLT 1 BOULON 1	8	8	8	8		
7	90105–08175	BOLT, FLANGE BOULON, A COLLERETTE	16	16	16	16		
8	93210–26658	O-RING JOINT TORIQUE	2	2	2	2		
9	6CE–1131C–00–9S	COVER, JOINT COUVERCLE, RACCORDEMENT	1	1	1	1		
10	63P–11325–01	ANODE ANODE	2	2	2	2		
11	90151–06M02	SCREW, COUNTERSUNK VIS, TETE NOYEE	2	2	2	2		
12	6ML–1131B–00	GASKET, COVER JOINT, COUVERCLE	1	1	1	1		
13	90105–06M07	BOLT, FLANGE BOULON, A COLLERETTE	8	8	8	8		
14	6ML–15411–00–9S	COVER, CRANKCASE 1 COUVERCLE 1, CARTER MOTEUR	1	1	1	1		
15	6ML–15421–00–9S	COVER, CRANKCASE 2 COUVERCLE 2, CARTER MOTEUR	1	1	1	1		
16	91690–40010	PIN, SPRING AGRAFFE	4	4	4	4		
17	6ML–15451–00	GASKET, CRANKCASE COVER 1 JOINT, COUVERCLE DE CARTER 1	1	1	1	1		
18	6ML–15461–00	GASKET, CRANKCASE COVER 2 JOINT, COUVERCLE DE CARTER 2	1	1	1	1		
19	90105–06151	BOLT, FLANGE BOULON, A COLLERETTE	20	20	20	20		
20	63P–11325–01	ANODE ANODE	1	1	1	1		
21	90151–06M02	SCREW, COUNTERSUNK VIS, TETE NOYEE	1	1	1	1		
22	6CE–12411–10	THERMOSTAT THERMOSTAT	2	2	2	2		
23	67F–12412–00	.SEAL, THERMOSTAT .JOINT, THERMOSTAT	1	1	1	1		
24	6CE–12413–B0–9S	COVER, THERMOSTAT COUVERCLE, THERMOSTAT	1	1	1	1		
25	6CE–12413–A0–9S	COVER, THERMOSTAT COUVERCLE, THERMOSTAT	1	1	1	1		
26	6ML–12422–00–9S	COVER, HOUSING COUVERCLE DE CARTER DE POMPE	2	2	2	2		
27	6CB–12427–11	GASKET, HOUSING COVER 1 JOINT, COUVERCLE DE CARTER 1	2	2	2	2		

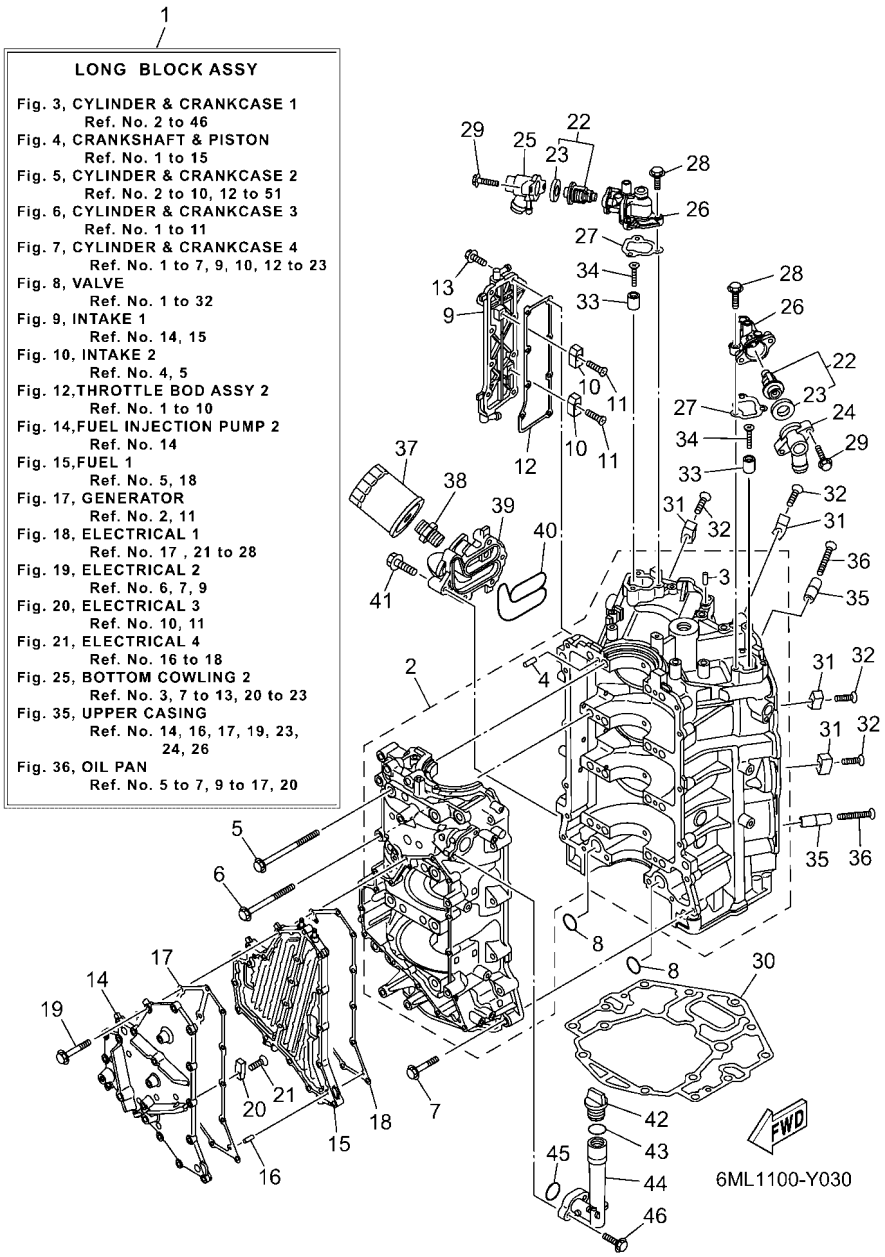

FIG. 3 CYLINDER & CRANKCASE 1 — CYLINDRE & CARTER 1

REF. NO.	PART NO. N° PIECES	DESCRIPTION DESCRIPTION	SA	NSA	NSA2	6MM1		REMARKS REMARQUES
28	95027–06025	BOLT, FLANGE BOULON, A COLLERETTE	6	6	6	6		
29	90105–06037	BOLT, FLANGE BOULON, A COLLERETTE	4	4	4	4		
30	6KA–11351–00	GASKET, CYLINDER JOINT, D'EMBASE	1	1	1	1		
31	6AW–1132P–00	ANODE 5 ANODE 5	4	4	4	4		
32	98780–06530	SCREW, FLAT HEAD VIS A TETE FRAISEE	4	4	4	4		
33	68T–11325–00	ANODE ANODE	2	2	2	2		
34	90151–05M05	SCREW, COUNTERSUNK VIS, TETE NOYEE	2	2	2	2		
35	6AW–1132N–01	ANODE 4 ANODE 4	2	2	2	2		
36	98780–06550	SCREW, FLAT HEAD VIS A TETE FRAISEE	2	2	2	2		
37	N26–13440–03	ELEMENT ASSY, OIL CLEANER ELEMENT, FILTRE A HUILE	1	1	1	1		
38	90401–19001	BOLT, UNION BOULON, RACCORD	1	1	1	1		
39	6CE–13446–10–9S	CONNECTOR CONNECTEUR	1	1	1	1		
40	6CB–13477–00	GASKET JOINT	1	1	1	1		
41	90105–06151	BOLT, FLANGE BOULON, A COLLERETTE	5	5	5	5		
42	6G8–15363–00	PLUG, OIL PLOT, HUILE	1	1	1	1		
43	93210–24M79	O-RING JOINT TORIQUE	1	1	1	1		
44	6ML–15319–00	JOINT JOINT	1	1	1	1		
45	93210–27370	O-RING JOINT TORIQUE	1	1	1	1		
46	90105–06037	BOLT, FLANGE BOULON, A COLLERETTE	2	2	2	2		

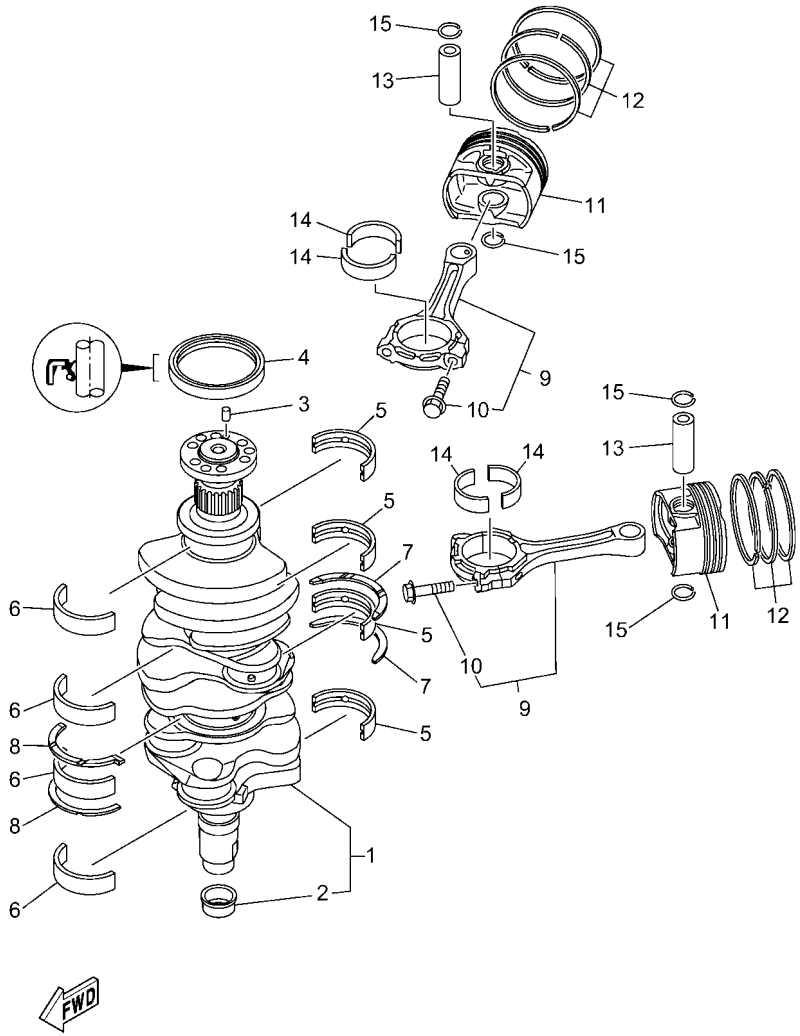

6ML1100-Y040

FIG. 4 CRANKSHAFT & PISTON — VILEBREQUIN & PISTON

REF. NO.	PART NO. N° PIECES	DESCRIPTION DESCRIPTION	SA	NSA	NSA2	6MM1		REMARKS REMARQUES
1	6ML–11410–00	CRANKSHAFT VILEBREQUIN COMPLET	1	1	1	1		
2	6CB–11478–00	.COLLAR .COLLERETTE	1	1	1	1		
3	93606–12019	PIN, DOWEL GOUPILLE	1	1	1	1		
4	93102–85008	OIL SEAL JOINT SPY	1	1	1	1		
5	6GR–11416–A0	PLANE BEARING, CRANKSHAFT 1 COUSSINET DE VILEBREQUIN 1	4	4	4	4		UR ORANGE UR ORANGE
	6GR–11416–00	PLANE BEARING, CRANKSHAFT 1 COUSSINET DE VILEBREQUIN 1	4	4	4	4		UR BLACK UR BLACK
	6GR–11416–10	PLANE BEARING, CRANKSHAFT 1 COUSSINET DE VILEBREQUIN 1	4	4	4	4		UR BLUE UR BLUE
	6GR–11416–20	PLANE BEARING, CRANKSHAFT 1 COUSSINET DE VILEBREQUIN 1	4	4	4	4		UR PINK UR PINK
	6GR–11416–30	PLANE BEARING, CRANKSHAFT 1 COUSSINET DE VILEBREQUIN 1	4	4	4	4		UR WHITE UR WHITE
	6GR–11416–40	PLANE BEARING, CRANKSHAFT 1 COUSSINET DE VILEBREQUIN 1	4	4	4	4		UR YELLOW GREEN UR YELLOW GREEN
6	6GR–11417–A0	PLANE BEARING, CRANKSHAFT 2 COUSSINET DE VILEBREQUIN 2	4	4	4	4		UR ORANGE UR ORANGE
	6GR–11417–00	PLANE BEARING, CRANKSHAFT 2 COUSSINET DE VILEBREQUIN 2	4	4	4	4		UR BLACK UR BLACK
	6GR–11417–10	PLANE BEARING, CRANKSHAFT 2 COUSSINET DE VILEBREQUIN 2	4	4	4	4		UR BLUE UR BLUE
	6GR–11417–20	PLANE BEARING, CRANKSHAFT 2 COUSSINET DE VILEBREQUIN 2	4	4	4	4		UR PINK UR PINK
	6GR–11417–30	PLANE BEARING, CRANKSHAFT 2 COUSSINET DE VILEBREQUIN 2	4	4	4	4		UR WHITE UR WHITE
	6GR–11417–40	PLANE BEARING, CRANKSHAFT 2 COUSSINET DE VILEBREQUIN 2	4	4	4	4		UR YELLOW GREEN UR YELLOW GREEN
7	6CB–11426–03	BEARING, THRUST 1 ROULEMENT DE BUTEE 1	2	2	2	2		
8	6CB–11427–03	BEARING, THRUST 2 ROULEMENT DE BUTEE 2	2	2	2	2		
9	6ML–W1165–00	CONNECTING ROD ASSY BIELLE COMPLETTE	6	6	6	6		
10	6ML–11654–00	.BOLT, CONNECTING ROD .BOULON, BIELLE	2	2	2	2		
11	6ML–11631–00	PISTON (STD) PISTON (STD)	6	6	6	6		
12	6ML–11603–00	PISTON RING SET (STD) JEU DE SEGMENTS (STD)	6	6	6	6		
13	6GR–11633–00	PIN, PISTON AXE, PISTON	6	6	6	6		
14	6ML–11656–00	PLANE BEARING, CONNECTING ROD ROULEMENT DE BIELLE	12	12	12	12		UR UR
	6ML–11656–10	PLANE BEARING, CONNECTING ROD ROULEMENT DE BIELLE	12	12	12	12		UR UR
	6ML–11656–20	PLANE BEARING, CONNECTING ROD ROULEMENT DE BIELLE	12	12	12	12		UR UR
	6ML–11656–30	PLANE BEARING, CONNECTING ROD ROULEMENT DE BIELLE	12	12	12	12		UR UR

FIG. 4 CRANKSHAFT & PISTON — VILEBREQUIN & PISTON

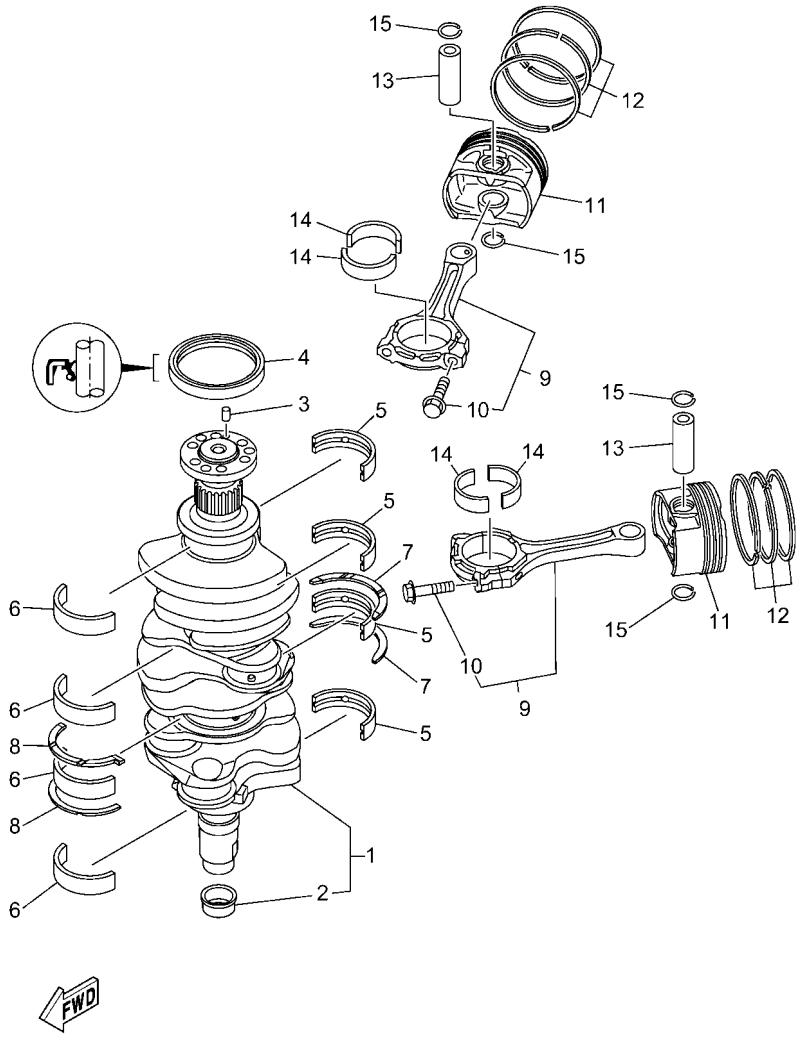

6ML1100-Y040

REF. NO.	PART NO. N° PIECES	DESCRIPTION DESCRIPTION	SA	NSA	NSA2	6MM1		REMARKS REMARQUES
14	6ML–11656–40	PLANE BEARING, CONNECTING ROD ROULEMENT DE BIELLE	12	12	12	12		UR UR
15	6GR–11634–00	CLIP, PISTON PIN AGRAFE, AXE DE PISTON	12	12	12	12		

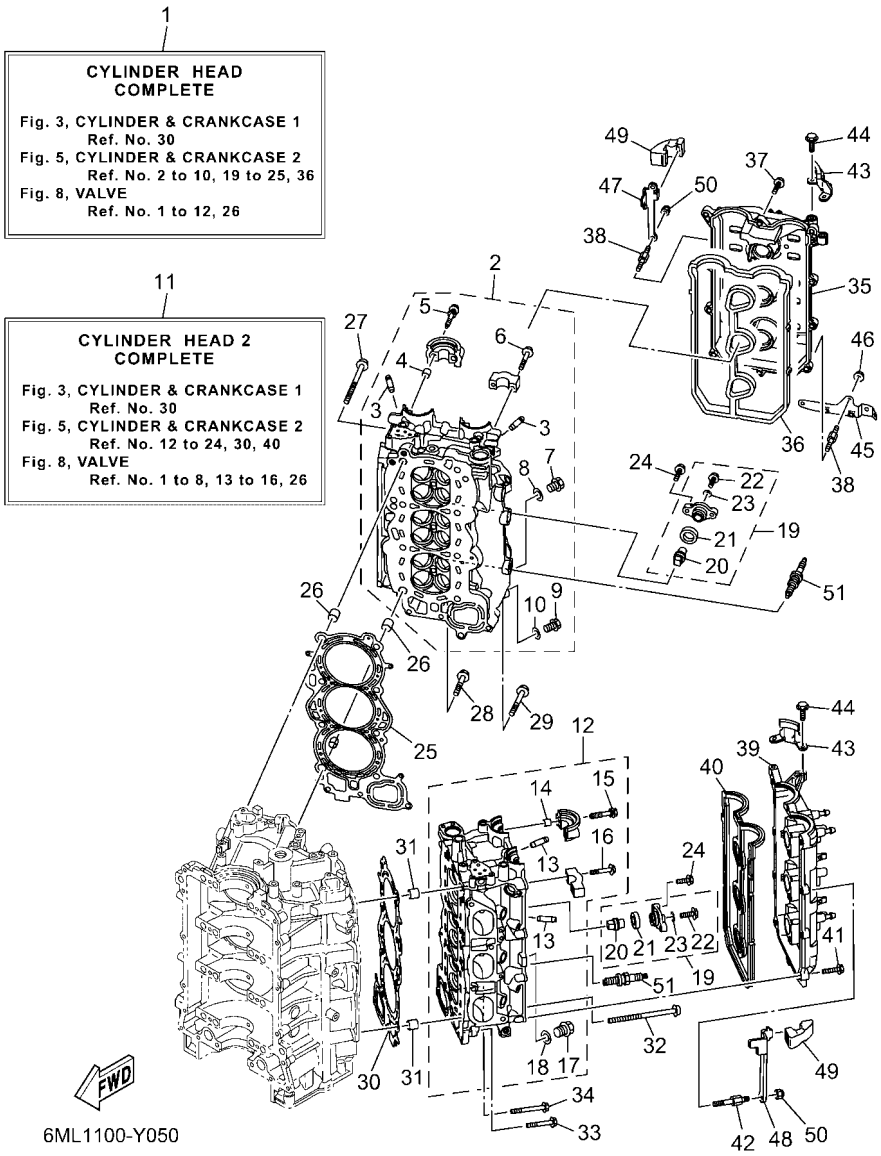

FIG. 5 CYLINDER & CRANKCASE 2 — CYLINDRE & CARTER 2

REF. NO.	PART NO. N° PIECES	DESCRIPTION DESCRIPTION	SA	NSA	NSA2	6MM1		REMARKS REMARQUES
1	6ML–W009A–00–9S	CYLINDER HEAD COMPLETE CULASSE (ENS.)	1	1	1	1		
2	6ML–11110–00–9S	CYLINDER HEAD ASSY JEU DE CULASSE	1	1	1	1		
3	6S5–11133–10	.GUIDE, VALVE 1 .GUIDE, SOUPAPE 1	12	12	12	12		
4	91809–08006	.PIN, DOWEL .GOUJON, D'ASSEMBLAGE	4	4	4	4		
5	90119–07001	.BOLT, WITH WASHER .BOULON, AVEC RONDELLE	4	4	4	4		
6	90119–07234	.BOLT, WITH WASHER .BOULON, AVEC RONDELLE	12	12	12	12		
7	90340–18M09	.PLUG, STRAIGHT SCREW .PLOT, FILETE DROIT	1	1	1	1		
8	90201–186F1	.WASHER, PLATE .RONDELLE, PLATE	1	1	1	1		
9	90340–14M06	.PLUG, STRAIGHT SCREW .PLOT, FILETE DROIT	1	1	1	1		
10	90430–14115	.GASKET .JOINT	1	1	1	1		
11	6ML–W009C–00–9S	CYLINDER HEAD 2 COMPLETE CULASSE 2	1	1	1	1		
12	6ML–11120–00–9S	CYLINDER HEAD ASSY 2 CULASSE 2	1	1	1	1		
13	6S5–11133–10	.GUIDE, VALVE 1 .GUIDE, SOUPAPE 1	12	12	12	12		
14	91809–08006	.PIN, DOWEL .GOUJON, D'ASSEMBLAGE	4	4	4	4		
15	90119–07001	.BOLT, WITH WASHER .BOULON, AVEC RONDELLE	4	4	4	4		
16	90119–07234	.BOLT, WITH WASHER .BOULON, AVEC RONDELLE	12	12	12	12		
17	90340–18M09	.PLUG, STRAIGHT SCREW .PLOT, FILETE DROIT	1	1	1	1		
18	90201–186F1	.WASHER, PLATE .RONDELLE, PLATE	1	1	1	1		
19	6ML–11301–00	ANODE COVER ASSY COUVERCLE ANODE (ENS.)	8	8	8	8		
20	6ML–11325–00	.ANODE .ANODE	1	1	1	1		
21	67F–11328–01	.GROMMET, ANODE .PASSE-FIL	1	1	1	1		
22	90105–06M07	.BOLT, FLANGE .BOULON, A COLLERETTE	1	1	1	1		
23	90430–06M03	.GASKET .JOINT	1	1	1	1		
24	95D95–08025	BOLT, FLANGE DEEP RECESS BOULON FIXATION	16	16	16	16		
25	6ML–11181–00	GASKET, CYLINDER HEAD 1 JOINT, DE CULASSE 1	1	1	1	1		
26	90387–11005	COLLAR COLLERETTE	2	2	2	2		
27	90149–11001	SCREW VIS	8	8	8	8		

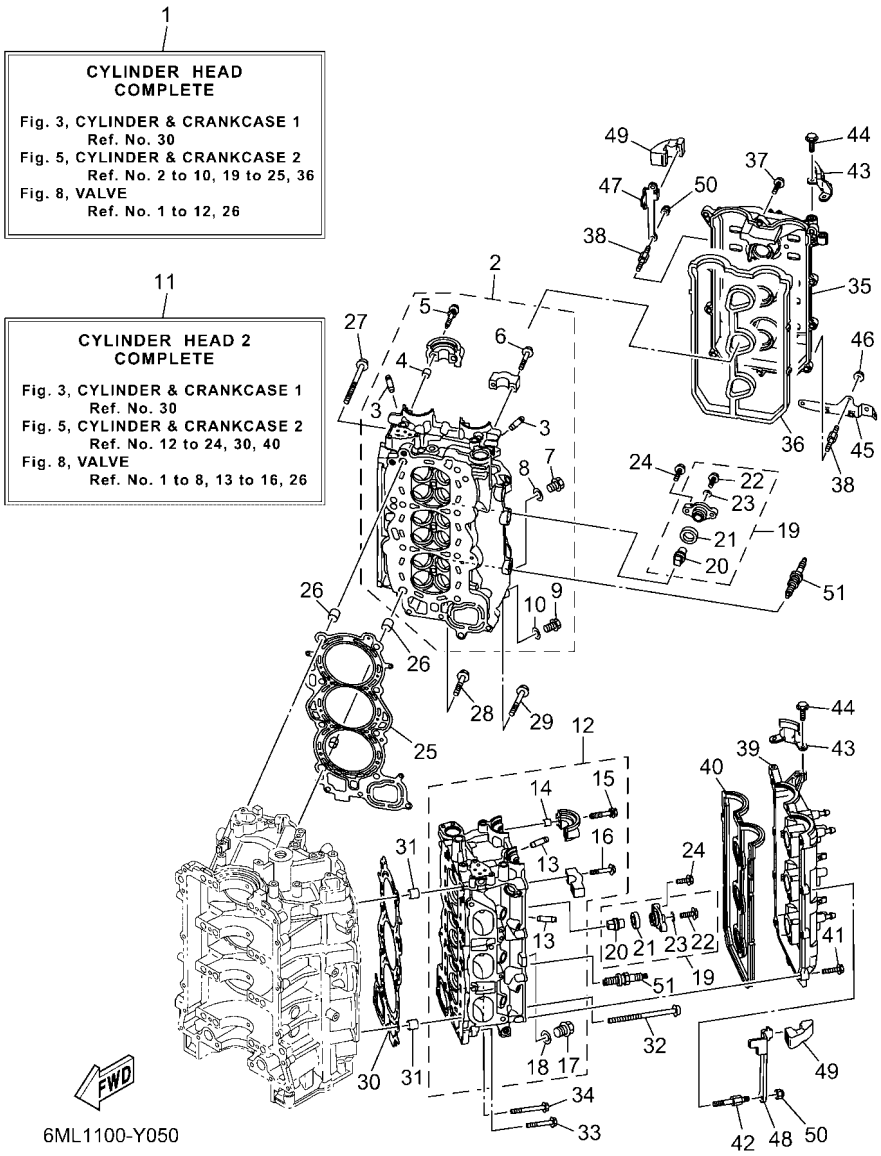

FIG. 5 CYLINDER & CRANKCASE 2 — CYLINDRE & CARTER 2

REF. NO.	PART NO. N° PIECES	DESCRIPTION DESCRIPTION	SA	NSA	NSA2	6MM1		REMARKS REMARQUES
28	90105–08175	BOLT, FLANGE BOULON, A COLLERETTE	2	2	2	2		
29	90105–08220	BOLT, FLANGE BOULON, A COLLERETTE	1	1	1	1		
30	6ML–11182–00	GASKET, CYLINDER HEAD 2 JOINT, CULASSE 2	1	1	1	1		
31	90387–11005	COLLAR COLLERETTE	2	2	2	2		
32	90149–11001	SCREW VIS	8	8	8	8		
33	90105–08175	BOLT, FLANGE BOULON, A COLLERETTE	2	2	2	2		
34	90105–08220	BOLT, FLANGE BOULON, A COLLERETTE	1	1	1	1		
35	6ML–11191–00	COVER, CYLINDER HEAD 1 COUVERCLE, CULASSE 1	1	1	1	1		
36	6CB–11193–00	GASKET, HEAD COVER 1 JOINT, COUVERCLE DE CULASSE 1	1	1	1	1		
37	95D95–06030	BOLT, FLANGE DEEP RECESS BOULON FIXATION	9	9	9	9		
38	90109–06277	BOLT BOULON	4	4	4	4		
39	6CB–11192–02	COVER, CYLINDER HEAD 2 COUVERCLE, CULASSE 2	1	1	1	1		
40	6CB–11194–00	GASKET, HEAD COVER 2 JOINT, COUVERCLE DE CULASSE 2	1	1	1	1		
41	95D95–06030	BOLT, FLANGE DEEP RECESS BOULON FIXATION	11	11	11	11		
42	90109–06277	BOLT BOULON	2	2	2	2		
43	6ML–15142–00	GUIDE 1 GUIDE 1	2	2	2	2		
44	95D95–06014	BOLT, FLANGE DEEP RECESS BOULON FIXATION	4	4	4	4		
45	6KA–2134V–00	BRACKET SUPPORT	1	1	1	1		
46	90179–06M28	NUT ECROU	2	2	2	2		
47	6KW–11998–00	BRACKET 1 SUPPORT 1	1	1	1	1		
48	6KW–11999–00	BRACKET 2 SUPPORT 2	1	1	1	1		
49	6KW–42662–00	DAMPER AMORTISSEUR	2	2	2	2		
50	90185–06M07	NUT, SELF-LOCKING ECROU,AUTO-BLOQUANT	4	4	4	4		
51	94702–00442	PLUG, SPARK (NGK ILMAR7E9) BOUGIE D,ALLUMAGE (NGK ILMAR7E	6	6	6	6		

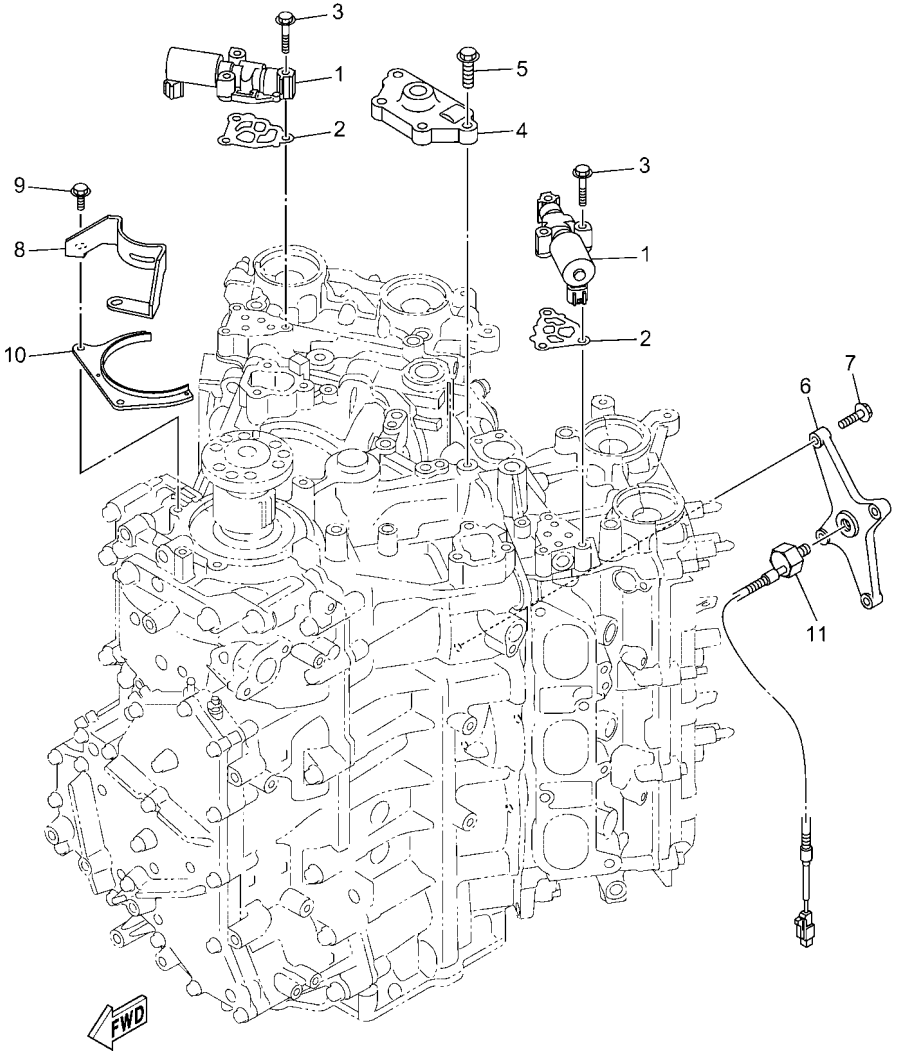

6ML1100-Y060

FIG. 6 CYLINDER & CRANKCASE 3 — CYLINDRE & CARTER 3

REF. NO.	PART NO. N° PIECES	DESCRIPTION DESCRIPTION	SA	NSA	NSA2	6MM1		REMARKS REMARQUES
1	6CB–86120–00	SOLENOID VALVE ASSY SOLENOIDE	2	2	2	2		
2	6CB–1242F–00	GASKET, FILTER JOINT, FILTRE	2	2	2	2		
3	90105–06035	BOLT, FLANGE BOULON, A COLLERETTE	6	6	6	6		
4	6CB–15544–00	STAY 1 SUPPORT 1	1	1	1	1		
5	90105–08178	BOLT, FLANGE BOULON, A COLLERETTE	4	4	4	4		
6	6CB–1135A–00	BRACKET SUPPORT	1	1	1	1		
7	90105–06037	BOLT, FLANGE BOULON, A COLLERETTE	4	4	4	4		
8	6CB–15142–00	GUIDE 1 GUIDE 1	1	1	1	1		
9	90105–06229	BOLT, FLANGE BOULON, A COLLERETTE	2	2	2	2		
10	6CB–1149A–00	PLATE 1 FLAQUE 1	1	1	1	1		
11	6P2–85780–01	SENSOR, KNOCK SONDE DE COGNEMENT	1	1	1	1		

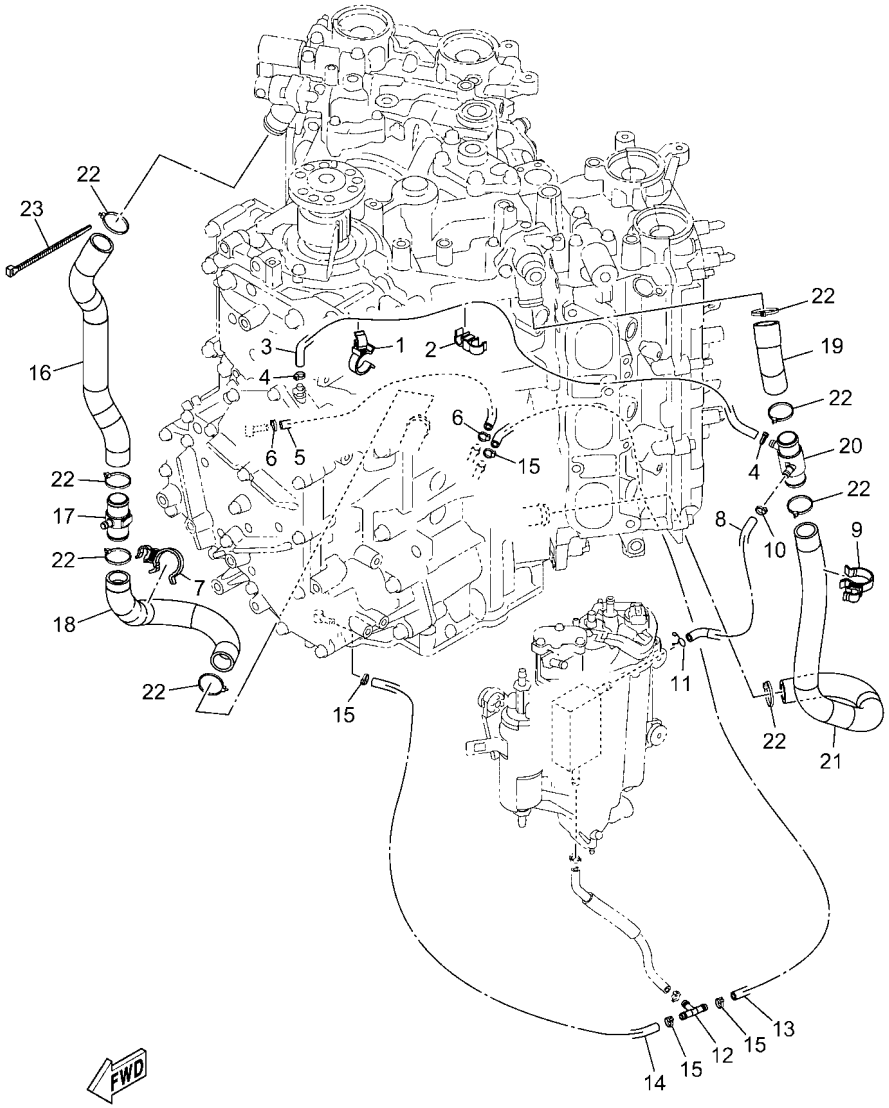

6ML1100-Y070

FIG. 7 CYLINDER & CRANKCASE 4 — CYLINDRE & CARTER 4

REF. NO.	PART NO. N° PIECES	DESCRIPTION DESCRIPTION	SA	NSA	NSA2	6MM1		REMARKS REMARQUES
1	90464–23004	CLAMP BRIDE	1	1	1	1		
2	90464–12010	CLAMP BRIDE	1	1	1	1		
3	6ML–12579–00	HOSE 4 TUYAU 4	1	1	1	1		
4	90465–11M10	CLAMP BRIDE	2	2	2	2		
5	6CB–12577–00	HOSE 2 TUYAU 2	1	1	1	1		
6	90465–11M10	CLAMP BRIDE	2	2	2	2		
7	90464–26002	CLAMP BRIDE	1	1	1	1		
8	6ML–12484–00	PIPE 4 DURITE 4	1	1	1	1		
9	90464–26002	CLAMP BRIDE	1	1	1	1		
10	90465–11M10	CLAMP BRIDE	1	1	1	1		
11	90467–09M09	CLIP JONC	1	1	1	1		
12	688–24378–00	PIPE, JOINT 3 DURITE RACCORDEMENT 3	1	1	1	1		
13	90445–09120	HOSE (L600) DURITE (L600)	1	1	1	1		
14	90445–096H2	HOSE (L280) DURITE (L280)	1	1	1	1		
15	90465–11M10	CLAMP BRIDE	4	4	4	4		
16	6ML–1244G–00	HOSE, 4 DURITE 4	1	1	1	1		
17	6CE–24378–00	PIPE, JOINT 3 DURITE RACCORDEMENT 3	1	1	1	1		
18	6CE–1244H–00	HOSE 5 DURITE 5	1	1	1	1		
19	6ML–1244J–00	HOSE 6 DURITE 6	1	1	1	1		
20	6ML–24378–00	PIPE, JOINT 3 DURITE RACCORDEMENT 3	1	1	1	1		
21	6ML–1243E–00	HOSE 2 DURITE 2	1	1	1	1		
22	90465–11M59	CLAMP BRIDE	8	8	8	8		
23	90465–14M66	CLAMP BRIDE	1	1	1	1		

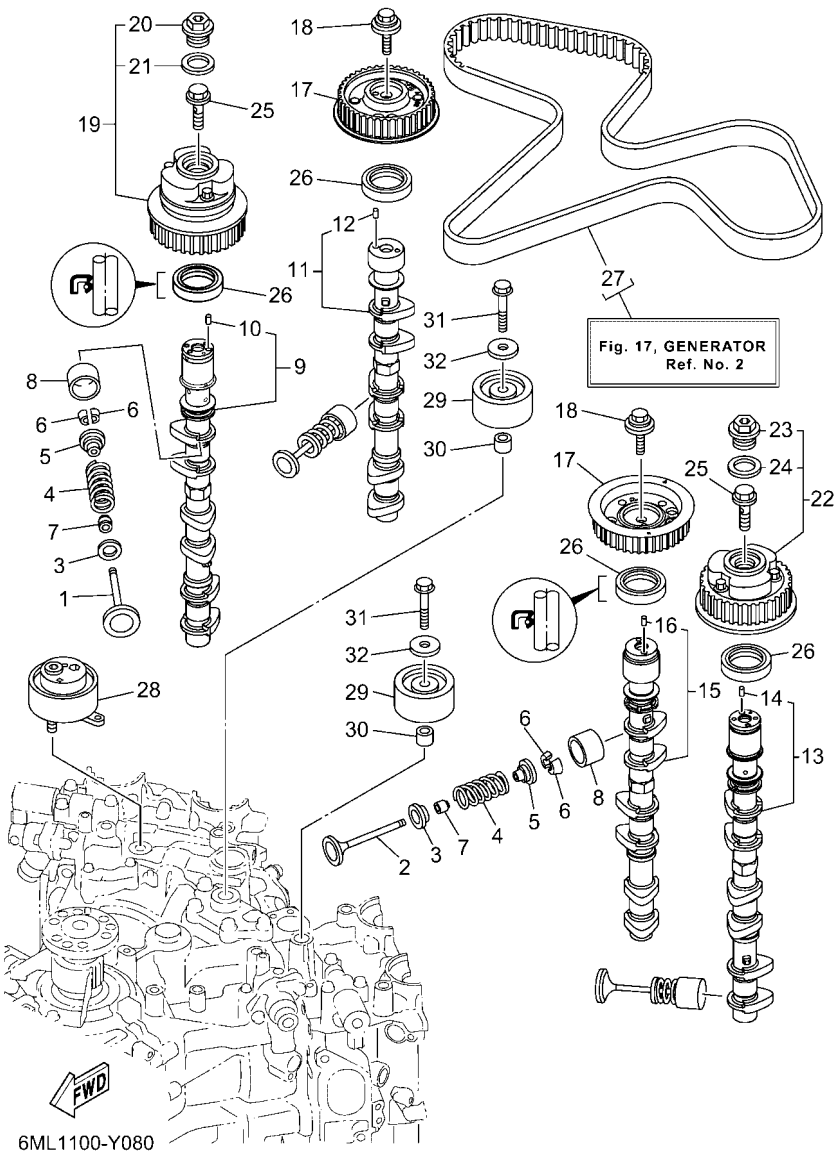

FIG. 8 VALVE SOUPAPE

REF. NO.	PART NO. N° PIECES	DESCRIPTION DESCRIPTION	SA	NSA	NSA2	6MM1		REMARKS REMARQUES
1	6ML–12111–00	VALVE, INTAKE SOUPAPE, ADMISSION	12	12	12	12		
2	6ML–12121–00	VALVE, EXHAUST SOUPAPE, ECHAPPEMENT	12	12	12	12		
3	6ML–12116–00	SEAT, VALVE SPRING SIEGE, RESSORT DE SOUPAPE	24	24	24	24		
4	6ML–12113–00	SPRING, VALVE INNER RESSORT DE SOUPAPE, INTERNE	24	24	24	24		
5	K0F–A3741–00	RETAINER, VALVE SPRING BUTEE DE RESSORT DE SOUPAPA	24	24	24	24		
6	K0F–A3742–00	LOCK, VALVE SPRING RETAINER FRAISE, SOUPAPE	48	48	48	48		
7	51Y–12119–00	SEAL, VALVE STEM JOINT, QUEUE DE SOUPAPE	24	24	24	24		
8	6GR–12153–00	LIFTER, VALVE (3.000) LEVE-SOUPAPE (3.000)	24	24	24	24		UR UR
	6GR–12153–10	LIFTER, VALVE (3.025) LEVE-SOUPAPE (3.025)	24	24	24	24		UR UR
	6GR–12153–20	LIFTER, VALVE (3.050) LEVE-SOUPAPE (3.050)	24	24	24	24		UR UR
	6GR–12153–30	LIFTER, VALVE (3.075) LEVE-SOUPAPE (3.075)	24	24	24	24		UR UR
	6GR–12153–40	LIFTER, VALVE (3.100) LEVE-SOUPAPE (3.100)	24	24	24	24		UR UR
	6GR–12153–50	LIFTER, VALVE (3.120) LEVE-SOUPAPE (3.120)	24	24	24	24		UR UR
	6GR–12153–60	LIFTER, VALVE (3.140) LEVE-SOUPAPE (3.140)	24	24	24	24		UR UR
	6GR–12153–70	LIFTER, VALVE (3.160) LEVE-SOUPAPE (3.160)	24	24	24	24		UR UR
	6GR–12153–80	LIFTER, VALVE (3.180) LEVE-SOUPAPE (3.180)	24	24	24	24		UR UR
	6GR–12153–90	LIFTER, VALVE (3.200) LEVE-SOUPAPE (3.200)	24	24	24	24		UR UR
	6GR–12153–A0	LIFTER, VALVE (3.220) LEVE-SOUPAPE (3.220)	24	24	24	24		UR UR
	6GR–12153–B0	LIFTER, VALVE (3.240) LEVE-SOUPAPE (3.240)	24	24	24	24		UR UR
	6GR–12153–C0	LIFTER, VALVE (3.260) LEVE-SOUPAPE (3.260)	24	24	24	24		UR UR
	6GR–12153–D0	LIFTER, VALVE (3.280) LEVE-SOUPAPE (3.280)	24	24	24	24		UR UR
	6GR–12153–E0	LIFTER, VALVE (3.300) LEVE-SOUPAPE (3.300)	24	24	24	24		UR UR
	6GR–12153–F0	LIFTER, VALVE (3.320) LEVE-SOUPAPE (3.320)	24	24	24	24		UR UR
	6GR–12153–G0	LIFTER, VALVE (3.340) LEVE-SOUPAPE (3.340)	24	24	24	24		UR UR
	6GR–12153–H0	LIFTER, VALVE (3.360) LEVE-SOUPAPE (3.360)	24	24	24	24		UR UR
	6GR–12153–J0	LIFTER, VALVE (3.380) LEVE-SOUPAPE (3.380)	24	24	24	24		UR UR
	6GR–12153–K0	LIFTER, VALVE (3.400) LEVE-SOUPAPE (3.400)	24	24	24	24		UR UR

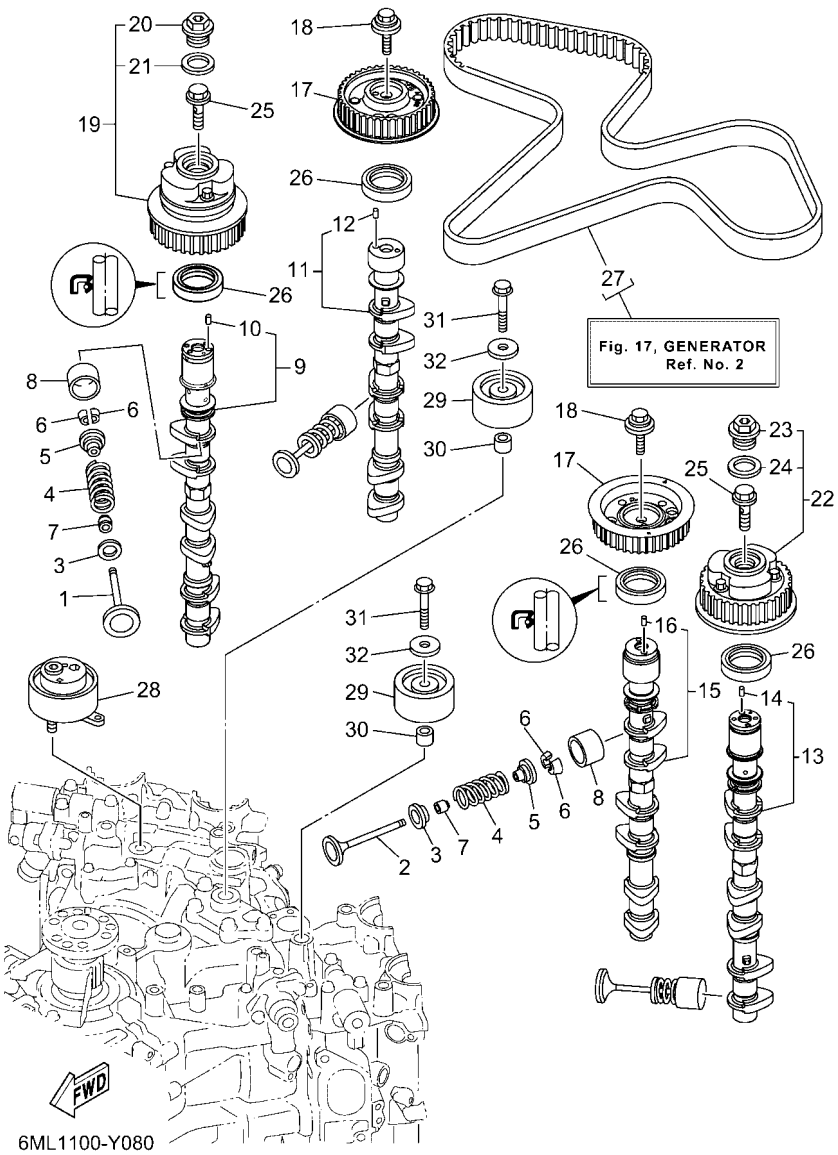

FIG. 8 VALVE SOUPAPE

REF. NO.	PART NO. N° PIECES	DESCRIPTION DESCRIPTION	SA	NSA	NSA2	6MM1		REMARKS REMARQUES
8	6GR–12153–L0	LIFTER, VALVE (3.420) LEVE-SOUPAPE (3.420)	24	24	24	24		UR UR
	6GR–12153–M0	LIFTER, VALVE (3.440) LEVE-SOUPAPE (3.440)	24	24	24	24		UR UR
	6GR–12153–N0	LIFTER, VALVE (3.460) LEVE-SOUPAPE (3.460)	24	24	24	24		UR UR
	6GR–12153–P0	LIFTER, VALVE (3.480) LEVE-SOUPAPE (3.480)	24	24	24	24		UR UR
	6GR–12153–R0	LIFTER, VALVE (3.500) LEVE-SOUPAPE (3.500)	24	24	24	24		UR UR
	6GR–12153–S0	LIFTER, VALVE (3.520) LEVE-SOUPAPE (3.520)	24	24	24	24		UR UR
	6GR–12153–T0	LIFTER, VALVE (3.540) LEVE-SOUPAPE (3.540)	24	24	24	24		UR UR
	6GR–12145–00	LIFTER, VALVE (3.560) LEVE-SOUPAPE (3.560)	24	24	24	24		UR UR
	6GR–12145–10	LIFTER, VALVE (3.580) LEVE-SOUPAPE (3.580)	24	24	24	24		UR UR
	6GR–12145–20	LIFTER, VALVE (3.600) LEVE-SOUPAPE (3.600)	24	24	24	24		UR UR
	6GR–12145–30	LIFTER, VALVE (3.625) LEVE-SOUPAPE (3.625)	24	24	24	24		UR UR
	6GR–12145–40	LIFTER, VALVE (3.650) LEVE-SOUPAPE (3.650)	24	24	24	24		UR UR
	6GR–12145–50	LIFTER, VALVE (3.675) LEVE-SOUPAPE (3.675)	24	24	24	24		UR UR
	6GR–12145–60	LIFTER, VALVE (3.700) LEVE-SOUPAPE (3.700)	24	24	24	24		UR UR
9	6ML–12171–00	CAMSHAFT 1 ARBRE A CAMES 1	1	1	1	1		
10	93605–10108	.PIN, DOWEL .AXE	1	1	1	1		
11	6ML–12181–00	CAMSHAFT 2 ARBRE A CAMES 2	1	1	1	1		
12	93605–10108	.PIN, DOWEL .AXE	1	1	1	1		
13	6ML–12172–00	CAMSHAFT 3 ARBRE A CAMES 3	1	1	1	1		
14	93605–10108	.PIN, DOWEL .AXE	1	1	1	1		
15	6ML–12182–00	CAMSHAFT 4 ARBRE A CAMES 4	1	1	1	1		
16	93605–10108	.PIN, DOWEL .AXE	1	1	1	1		
17	6KA–11567–00	GEAR, DRIVEN 2 PIGNON SECONDAIRE 2	2	2	2	2		
18	90119–10050	BOLT, WITH WASHER BOULON, AVEC RONDELLE	2	2	2	2		
19	6CB–12645–01	PULLEY ASSY 1 POULIE COMPLET 1	1	1	1	1		
20	6P2–12623–00	.BOLT .BOULON	1	1	1	1		
21	6P2–12663–00	.GASKET .JOINT	1	1	1	1		

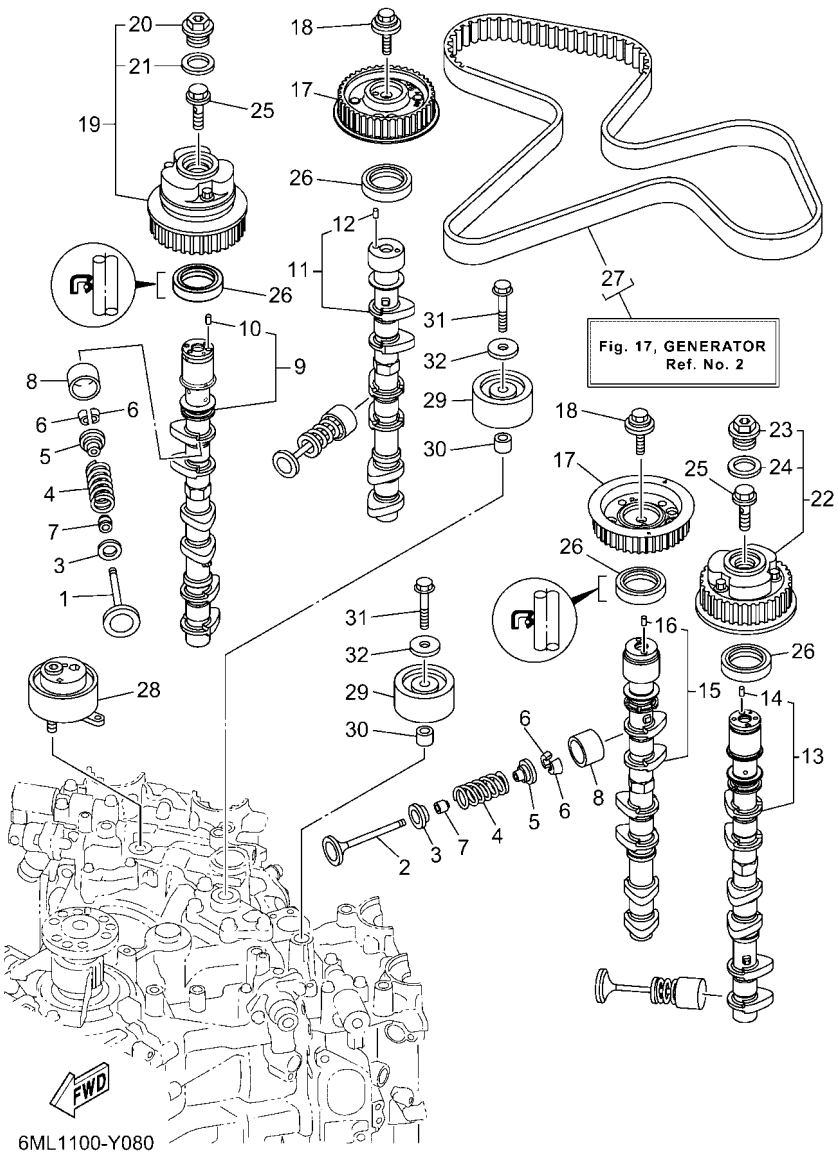

FIG. 8 VALVE SOUPAPE

REF. NO.	PART NO. N° PIECES	DESCRIPTION DESCRIPTION	SA	NSA	NSA2	6MM1		REMARKS REMARQUES
22	6CB–1264A–01	PULLEY ASSY 2 POULIE COMPLET 2	1	1	1	1		
23	6P2–12623–00	.BOLT .BOULON	1	1	1	1		
24	6P2–12663–00	.GASKET .JOINT	1	1	1	1		
25	6P2–12615–00	BOLT BOULON	2	2	2	2		
26	93102–38008	OIL SEAL JOINT SPY	4	4	4	4		
27	6CB–W4624–00	BELT (WITH ROTOR BOLTS) COURROIE (AVEC BOULON)	1	1	1	1		
28	6CB–11590–04	TENSIONER ASSY TENDEUR (ENS.)	1	1	1	1		
29	6CB–15512–00	GEAR, IDLER 1 PIGNON, INTERMEDIAIRE 1	2	2	2	2		
30	99530–14016	PIN, DOWEL GOUJON, D'ASSEMBLAGE	2	2	2	2		
31	90119–10M07	BOLT, WITH WASHER BOULON, AVEC RONDELLE	2	2	2	2		
32	90201–10M01	WASHER, PLATE RONDELLE, PLATE	2	2	2	2		

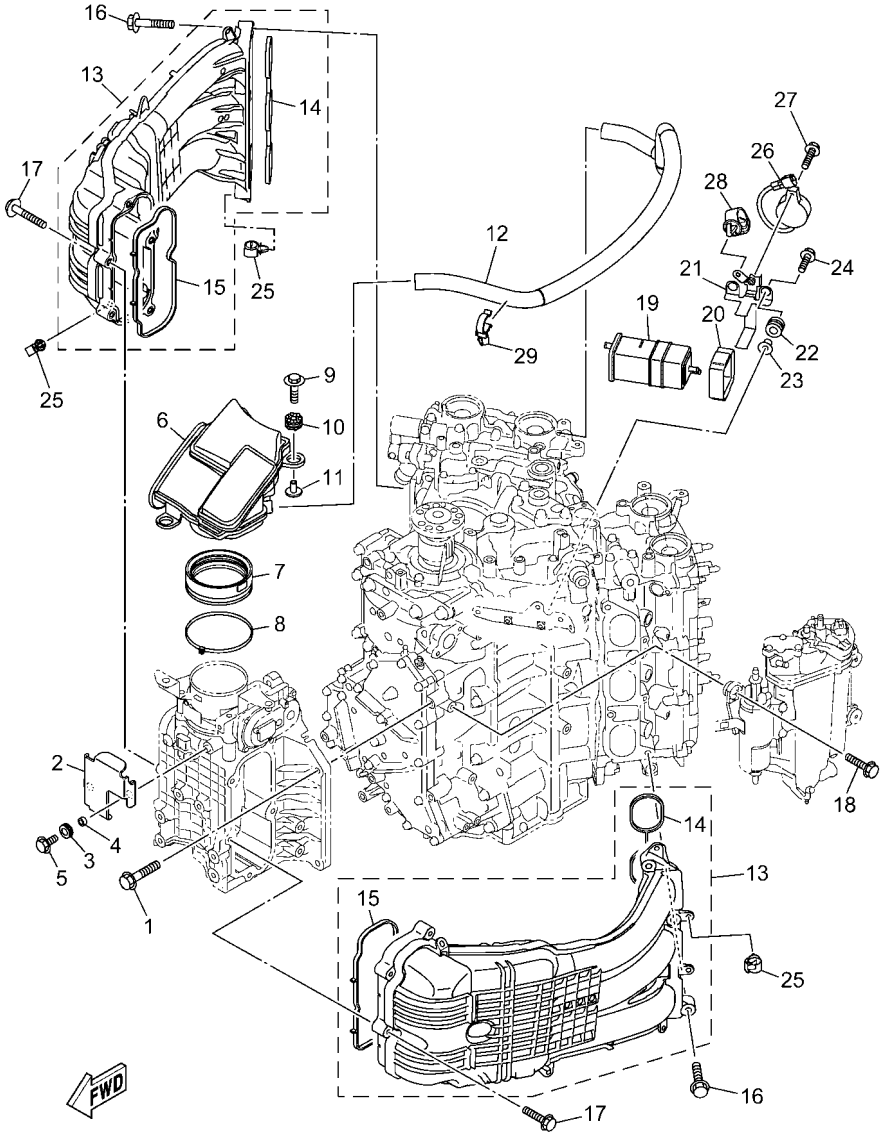

6ML1100-Y090

FIG. 9 INTAKE 1 — ADMISSION 1

REF. NO.	PART NO. N° PIECES	DESCRIPTION DESCRIPTION	SA	NSA	NSA2	6MM1		REMARKS REMARQUES
1	90105–08M87	BOLT, FLANGE BOULON, A COLLERETTE	4	4	4	4		
2	6ML–13881–00	COVER 1 COUVERCLE 1	1	1	1	1		
3	90480–13004	GROMMET PASSE-FIL	2	2	2	2		
4	90387–07054	COLLAR COLLERETTE	2	2	2	2		
5	95D95–06016	BOLT, FLANGE DEEP RECESS BOULON FIXATION	2	2	2	2		
6	6ML–14440–00	SILENCER ASSY, INTAKE SIENCIEUX D'ADMISSION	1	1	1	1		
7	6AW–1441J–01	PIPE, SILENCER DURITE, DE SILENCIEUX	1	1	1	1		
8	90464–99004	CLAMP BRIDE	1	1	1	1		
9	68F–85119–00	BOLT BOULON	2	2	2	2		
10	68F–85516–01	SPACER ENTRETOISE	2	2	2	2		
11	90387–06176	COLLAR COLLERETTE	2	2	2	2		
12	6ML–15373–00	PIPE, BREATHER DURITE DE RENIFLARD	1	1	1	1		
13	6ML–13641–00	MANIFOLD, INTAKE 1 TUBULURE, ADMISSION 1	2	2	2	2		
14	6CB–13645–00	.GASKET, MANIFOLD 1 .JOINT, TUBULURE 1	1	1	1	1		
15	6ML–13646–00	.GASKET, MANIFOLD 2 .JOINT, TUBULURE 2	1	1	1	1		
16	90119–08020	BOLT, WITH WASHER BOULON, AVEC RONDELLE	8	8	8	8		
17	90119–06MA6	BOLT, WITH WASHER BOULON, AVEC RONDELLE	10	10	10	10		
18	90119–06299	BOLT, WITH WASHER BOULON, AVEC RONDELLE	4	4	4	4		
19	69J–24170–00	CANISTER ASSY BANDE, RASERVOIR A ESSENCE	1	1	1	1		
20	6FP–2419E–01	COVER, CANISTER COUVERCLE	1	1	1	1		
21	6KA–2134X–00	BRACKET, CANISTER SUPPORT	1	1	1	1		
22	90480–10M23	GROMMET PASSE-FIL	2	2	2	2		
23	90387–06289	COLLAR COLLERETTE	2	2	2	2		
24	90119–06309	BOLT, WITH WASHER BOULON, AVEC RONDELLE	2	2	2	2		
25	90464–13249	CLAMP BRIDE	7	7	7	7		
26	6KA–83383–01	BUZZER RONFLEUR	1	1	1	1		
27	90119–05M04	BOLT, WITH WASHER BOULON, AVEC RONDELLE	1	1	1	1		

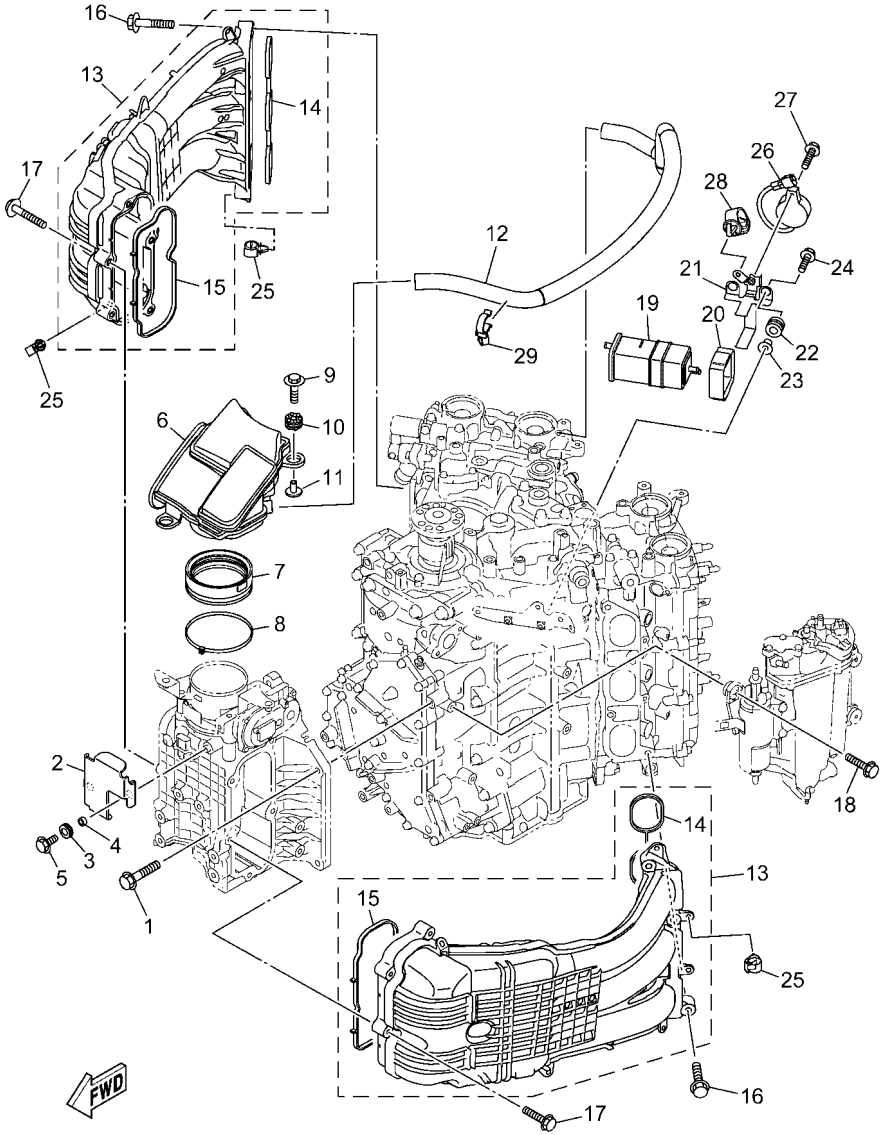

6ML1100-Y090

FIG. 9 INTAKE 1 — ADMISSION 1

REF. NO.	PART NO. N° PIECES	DESCRIPTION DESCRIPTION	SA	NSA	NSA2	6MM1		REMARKS REMARQUES
28	90464–13249	CLAMP BRIDE	1	1	1	1		
29	90464–23005	CLAMP BRIDE	1	1	1	1		

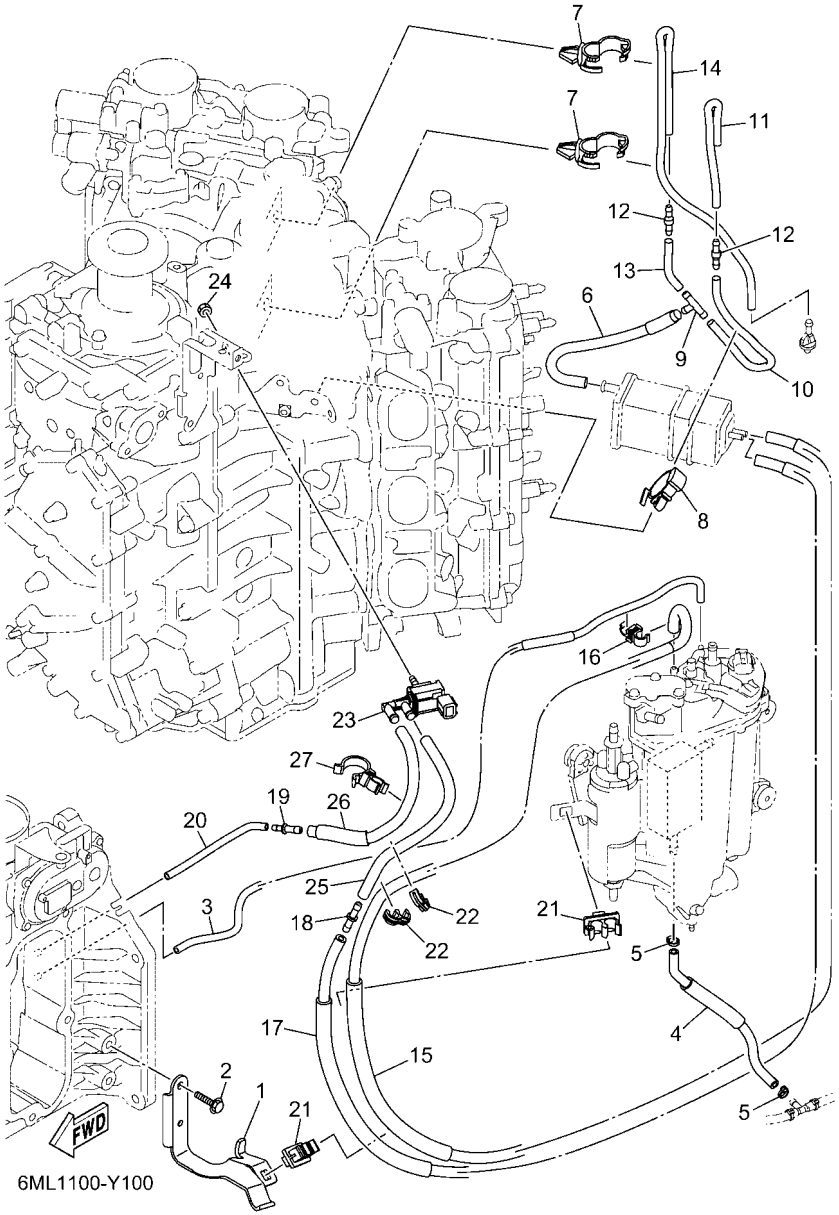

FIG. 10 INTAKE 2 — ADMISSION 2

REF. NO.	PART NO. N° PIECES	DESCRIPTION DESCRIPTION	SA	NSA	NSA2	6MM1		REMARKS REMARQUES
1	6ML–13782–00	STAY SUPPORT	1	1	1	1		
2	95D95–06016	BOLT, FLANGE DEEP RECESS BOULON FIXATION	2	2	2	2		
3	6ML–13532–00	HOSE, VACUUM SENSING 3 DURITE 3	1	1	1	1		
4	6ML–12482–00	PIPE 2 DURITE 2	1	1	1	1		
5	90465–11M10	CLAMP BRIDE	2	2	2	2		
6	6CB–13545–00	HOSE 1 DURITE 1	1	1	1	1		
7	90464–20181	CLAMP BRIDE	2	2	2	2		
8	90464–07209	CLAMP BRIDE	1	1	1	1		
9	688–24378–00	PIPE, JOINT 3 DURITE RACCORDEMENT 3	1	1	1	1		
10	6CB–13546–01	HOSE 2 DURITE 2	1	1	1	1		
11	6CB–13547–00	HOSE 3 DURITE 3	1	1	1	1		
12	6E5–21744–00	BREATHER RENIFLARD	2	2	2	2		
13	6CB–13548–00	HOSE, AIR 4 DURITE, A AIR 4	1	1	1	1		
14	6KA–12483–00	PIPE 3 DURITE 3	1	1	1	1		
15	6ML–1475A–00	PIPE 1 DURITE 1	1	1	1	1		
16	90464–09013	CLAMP BRIDE	1	1	1	1		
17	6ML–1475E–00	PIPE 2 DURITE	1	1	1	1		
18	6G8–24376–00	PIPE, JOINT 1 DURITE 1, RACCORDEMENT	1	1	1	1		
19	6EK–14989–00	ORIFICE, AIR VENT OR1F1CE	1	1	1	1		
20	6ML–1475G–00	PIPE 4 DURITE 4	1	1	1	1		
21	90464–11012	CLAMP BRIDE	2	2	2	2		
22	90464–10M57	CLAMP BRIDE	2	2	2	2		
23	6C5–86120–00	SOLENOID VALVE ASSY SOLENOIDE	1	1	1	1		
24	95380–06600	NUT, HEXAGON ECROU	1	1	1	1		
25	6ML–1475F–00	PIPE 3 DURITE 3	1	1	1	1		
26	6ML–2416A–00	HOSE DURITE	1	1	1	1		
27	90464–23001	CLAMP BRIDE	1	1	1	1		

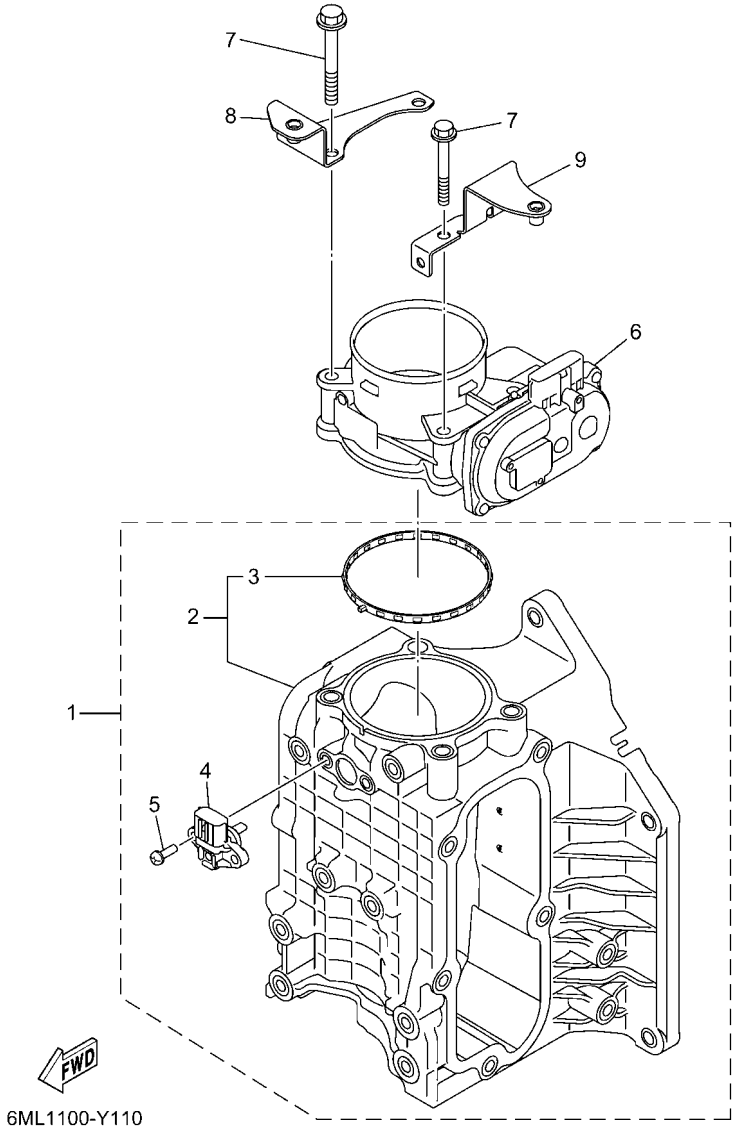

FIG. 11 THROTTLE BODY ASSY 1 — CARTER D'ACCELERATEUR 1

REF. NO.	PART NO. N° PIECES	DESCRIPTION DESCRIPTION	SA	NSA	NSA2	6MM1		REMARKS REMARQUES
1	6ML–13710–00	MIXING ASSY CHAMBRE DE MELANGE	1	1	1	1		
2	6ML–13711–00	.MIXING BODY .CHAMBRE DE MELANGE	1	1	1	1		
3	6GR–13556–00	..GASKET, MANIFOLD ..JOINT, TUBULURE	1	1	1	1		
4	68F–83688–10	.SENSOR ASSY .SONDE (ENS.)	1	1	1	1		
5	68V–81147–00	.SCREW 3 .VIS 3	2	2	2	2		
6	6GR–13751–00	BODY, THROTTLE 1 CARTER 1	1	1	1	1		
7	95D75–08060	BOLT, FLANGE DEEP RECESS BOULON FIXATION	4	4	4	4		
8	6ML–13898–00	HOLDER SUPPORT	1	1	1	1		
9	6ML–13898–10	HOLDER SUPPORT	1	1	1	1		

FIG. 12 THROTTLE BODY ASSY 2 — CARTER D'ACCELERATEUR 2

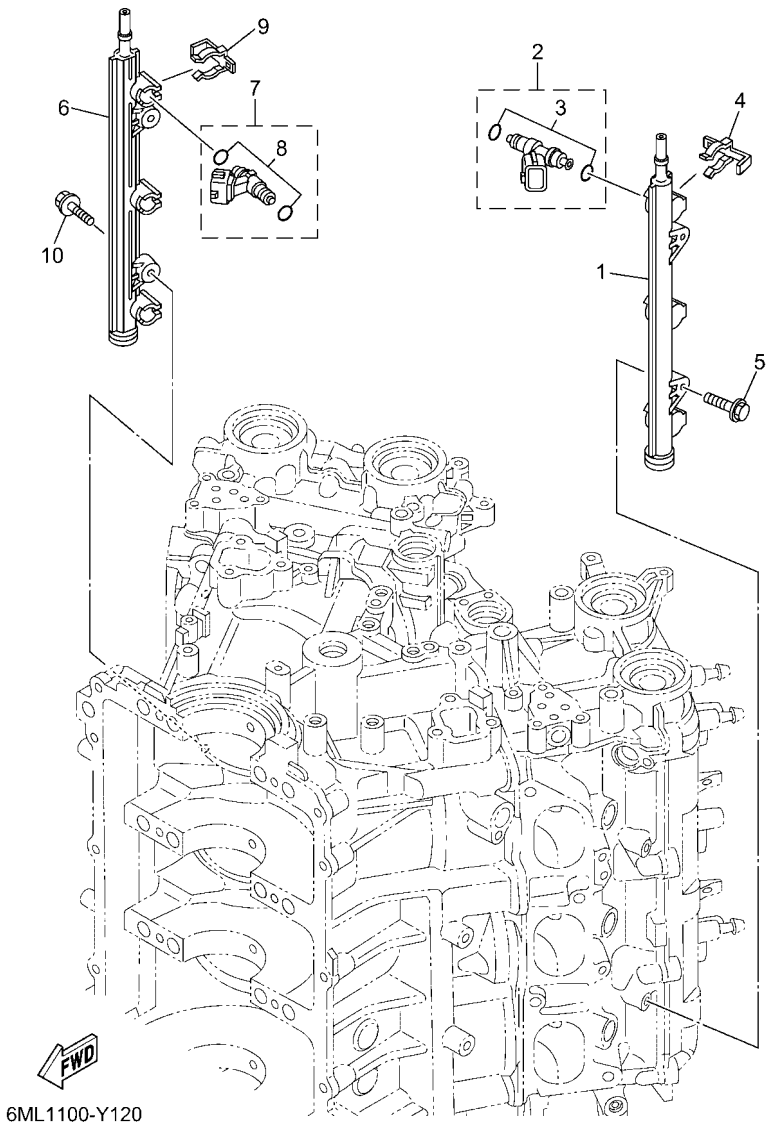

6ML1100-Y120

REF. NO.	PART NO. N° PIECES	DESCRIPTION DESCRIPTION	SA	NSA	NSA2	6MM1		REMARKS REMARQUES
1	6CB–13171–11	PIPE, DELIVERY 2 DURITE REFOULEMENT	1	1	1	1		
2	6AW–13761–01	INJECTOR INJECTEUR	3	3	3	3		
3	6AW–1410B–00	.PACKING KIT .POCHETTE DE JOINTS	1	1	1	1		
4	6CB–13577–00	CLIP AGRAFE	3	3	3	3		
5	90119–06047	BOLT, WITH WASHER BOULON, AVEC RONDELLE	2	2	2	2		
6	6CB–13161–11	PIPE, DELIVERY 1 DURITE REFOULEMENT 1	1	1	1	1		
7	6AW–13761–01	INJECTOR INJECTEUR	3	3	3	3		
8	6AW–1410B–00	.PACKING KIT .POCHETTE DE JOINTS	1	1	1	1		
9	6CB–13577–00	CLIP AGRAFE	3	3	3	3		
10	90119–06047	BOLT, WITH WASHER BOULON, AVEC RONDELLE	2	2	2	2		

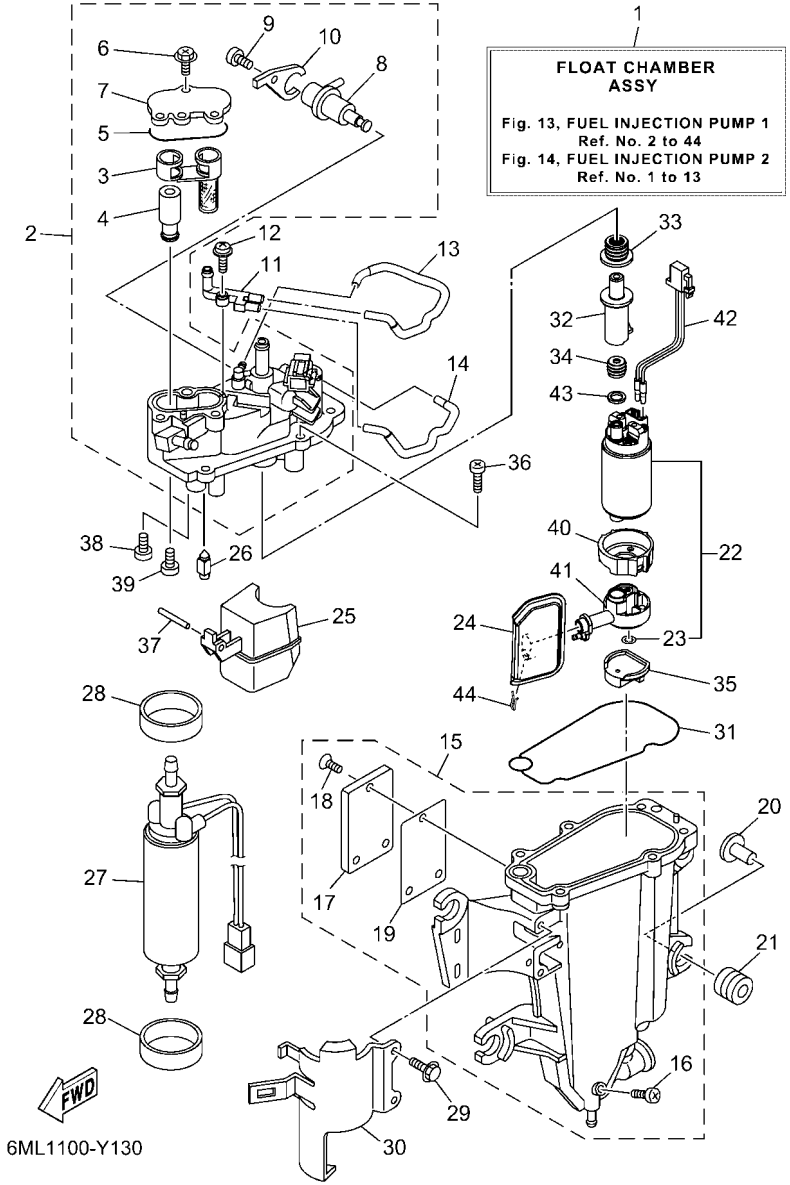

FIG. 13 FUEL INJECTION PUMP 1 POMPE A INJECTEUR 1

REF. NO.	PART NO. N° PIECES	DESCRIPTION DESCRIPTION	SA	NSA	NSA2	6MM1		REMARKS REMARQUES
1	6ML–14180–00	FLOAT CHAMBER ASSY CUVE DE FLOTTEUR	1	1	1	1		
2	6ML–14182–00	COVER, FLOAT CHAMBER COUVERCLE, CUVE DE FLOTTEUR	1	1	1	1		
3	6CB–24501–01	.FILTER, FUEL .FILTRE	1	1	1	1		
4	6CB–24460–00	.RELIEF VALVE ASSY .SOUPAPE DE SECURITE COMPLET	1	1	1	1		
5	6CB–13016–00	.O-RING .JOINT TORIQUE	1	1	1	1		
6	6CB–14216–00	.SCREW .VIS	3	3	3	3		
7	6CB–24217–00	.COVER .COUVERCLE	1	1	1	1		
8	6CB–13906–01	.REGULATOR, PRESSURE .REGULATEUR DE PRESSION	1	1	1	1		
9	6CB–14564–00	.SCREW .VIS	1	1	1	1		
10	6DA–14146–00	.PLATE .PLAQUE	1	1	1	1		
11	68V–24379–10	PIPE, JOINT 4 DURITE RACCORDEMENT 4	1	1	1	1		
12	68V–14216–00	SCREW VIS	1	1	1	1		
13	6CB–1475H–00	PIPE 5 DURITE 5	1	1	1	1		
14	6CB–1475J–00	PIPE 6 DURITE 6	1	1	1	1		
15	6ML–14181–00	BODY, FLOAT CHAMBER 1 CORPS, CUVE DE FLOTTEUR 1	1	1	1	1		
16	6P2–14191–00	.PLUG, DRAIN .PLOT, VIDANGE	1	1	1	1		
17	6EK–24452–00	.COVER .COUVERCLE	1	1	1	1		
18	6K8–14591–10	.SCREW .VIS	3	3	3	3		
19	6CB–24482–00	.GASKET 1 .JOINT 1	1	1	1	1		
20	63P–13716–00	COLLAR COLLERETTE	4	4	4	4		
21	6CB–13593–00	DAMPER AMORTISSEUR	4	4	4	4		
22	6ML–W1390–00	FUEL PUMP KIT KIT POMPE A CARBURANT	1	1	1	1		
23	6C5–14127–10	.CLIP .JONC	1	1	1	1		
24	6LH–13915–00	FILTER FILTRE	1	1	1	1		
25	6CB–14985–00	FLOAT FLOTTEUR	1	1	1	1		
26	6CB–14546–00	VALVE, NEEDLE POINTEAU	1	1	1	1		
27	6GR–24410–02	FUEL PUMP ASSY POMPE A ESSENCE	1	1	1	1		

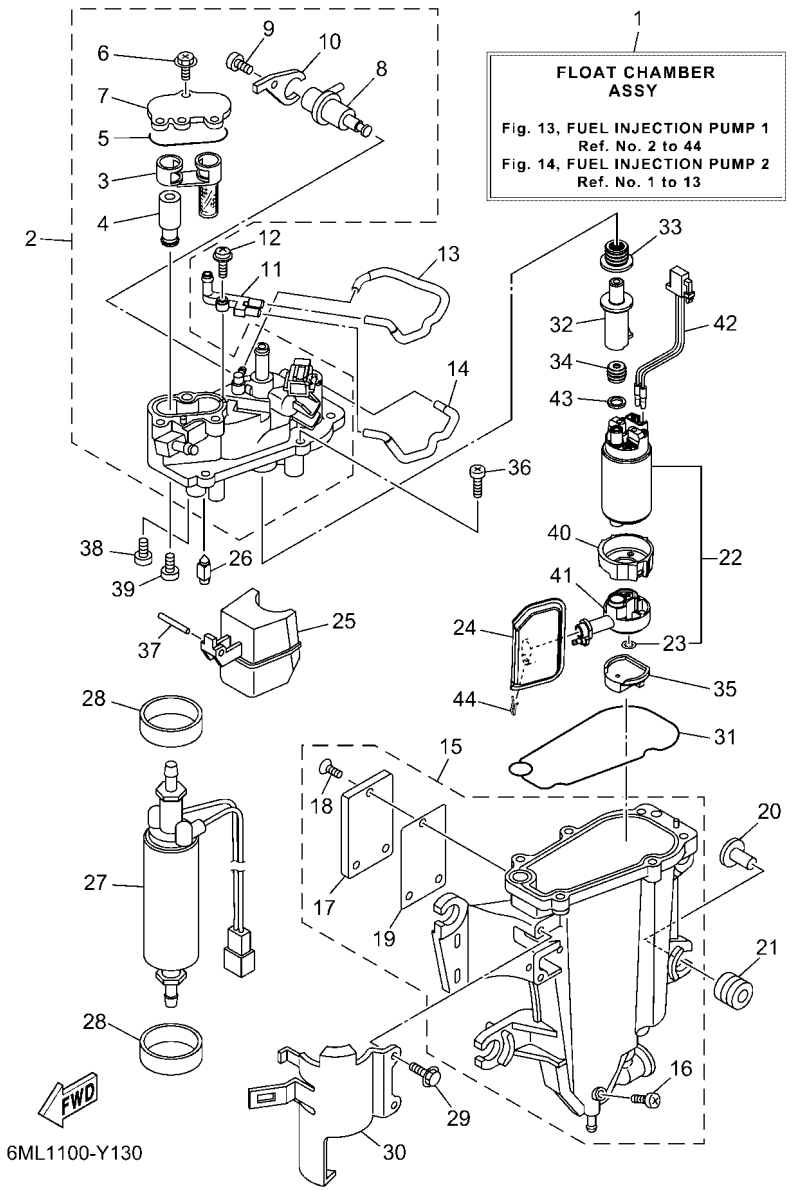

FIG. 13 FUEL INJECTION PUMP 1 — POMPE A INJECTEUR 1

REF. NO.	PART NO. N° PIECES	DESCRIPTION DESCRIPTION	SA	NSA	NSA2	6MM1		REMARKS REMARQUES
28	6CB–24492–00	BUSH, FUEL PUMP BAGUE	2	2	2	2		
29	6CB–24592–00	BOLT BOLTE	2	2	2	2		
30	6CB–24491–00	BRACKET, FUEL PUMP SUPPORT, POMPE A ESSENCE	1	1	1	1		
31	6CB–14984–00	GASKET, FLOAT CHAMBER JOINT, CUVE DE FLOTTEUR	1	1	1	1		
32	6LH–13132–00	JOINT RACCORD	1	1	1	1		
33	6LH–1447B–00	BUSH 1 DOUILLE 1	1	1	1	1		
34	6LH–13781–00	DAMPER, PUMP AMORTISSEUR, POMPE	1	1	1	1		
35	6LH–13784–00	COVER, PUMP COUVERCLE, POMPE	1	1	1	1		
36	63P–14567–00	SCREW VIS	6	6	6	6		
37	6P2–14386–00	PIN, FLOAT AXE, FLOTTEUR	1	1	1	1		
38	4SV–24453–00	SCREW VIS	1	1	1	1		
39	98507–04008	SCREW, PAN HEAD VIS, TETE TRONCONIQUE	1	1	1	1		
40	6LH–24492–00	BUSH, FUEL PUMP BAGUE	1	1	1	1		
41	6LH–13938–00	PIPE DURITE	1	1	1	1		
42	6LH–87226–00	WIRE HARNESS ASSY ENS. FAISCEAU ELECTRIQUE	1	1	1	1		
43	6LH–13716–00	COLLAR COLLERETTE	1	1	1	1		
44	6FM–14137–00	CLIP JONC	1	1	1	1		

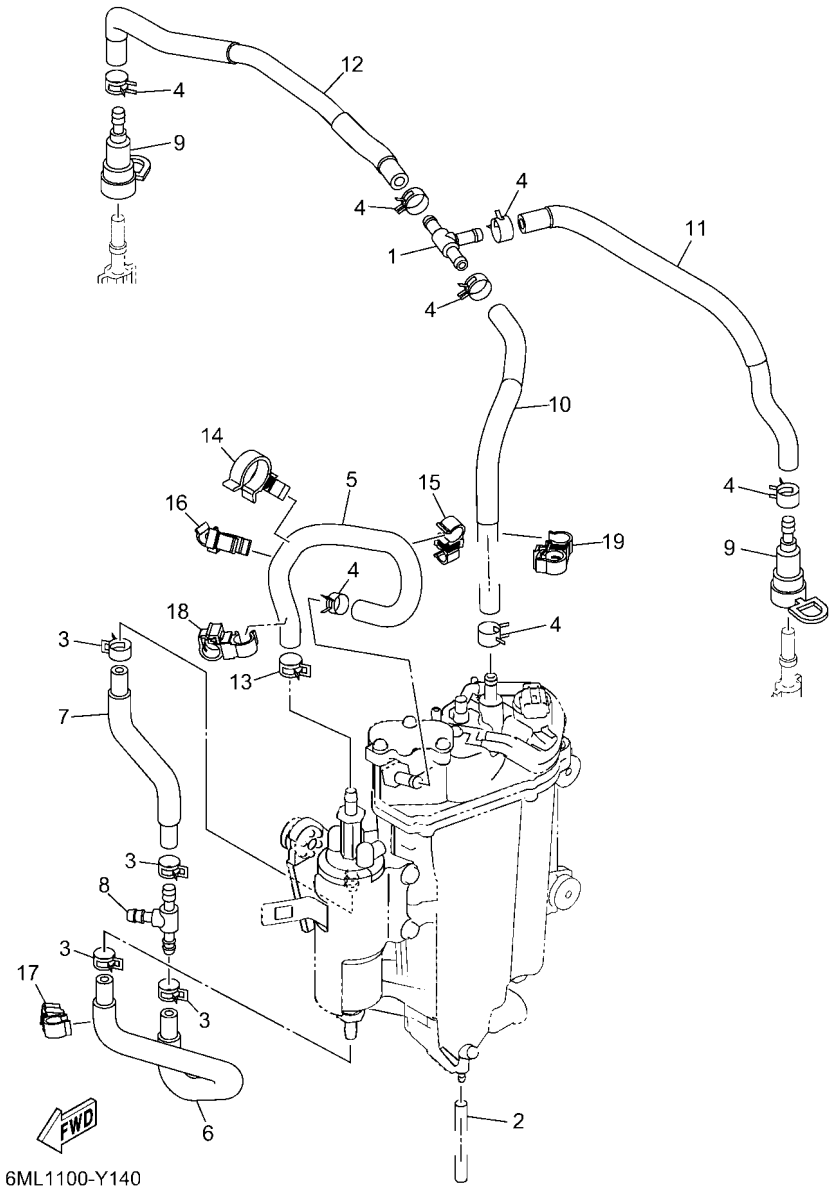

FIG. 14 FUEL INJECTION PUMP 2 — POMPE A INJECTEUR 2

REF. NO.	PART NO. N° PIECES	DESCRIPTION DESCRIPTION	SA	NSA	NSA2	6MM1		REMARKS REMARQUES
1	6CB–24461–00	PIPE, JOINT DURITE, RACCORDEMENT	1	1	1	1		
2	6P2–14149–00	PIPE DURITE	1	1	1	1		
3	90467–141A2	CLIP JONC	4	4	4	4		
4	68V–13577–01	CLIP AGRAFE	7	7	7	7		
5	6CB–24324–00	PIPE 13 DURITE 13	1	1	1	1		
6	6CB–24317–00	PIPE 7 DURITE 7	1	1	1	1		
7	6CB–24323–00	PIPE 12 DURITE 12	1	1	1	1		
8	6E5–24378–00	PIPE, JOINT 3 DURITE, RACCORDEMENT 3	1	1	1	1		
9	60E–24300–01	FUEL PIPE JOINT DURITE RACCORDEMT. A ESSENCE	2	2	2	2		
10	6ML–13971–00	PIPE, FUEL 1 TUBE 1, CARBURANT	1	1	1	1		
11	6ML–13974–00	PIPE, FUEL 4 TUBE 4, CARBURANT	1	1	1	1		
12	6ML–13972–00	PIPE, FUEL 2 TUBE 2, CARBURANT	1	1	1	1		
13	90467–140A9	CLIP JONC	1	1	1	1		
14	90464–23001	CLAMP BRIDE	1	1	1	1		
15	90464–12010	CLAMP BRIDE	1	1	1	1		
16	90464–13013	CLAMP BRIDE	1	1	1	1		
17	90464–12009	CLAMP BRIDE	1	1	1	1		
18	90464–12012	CLAMP BRIDE	1	1	1	1		
19	90464–12012	CLAMP BRIDE	1	1	1	1		

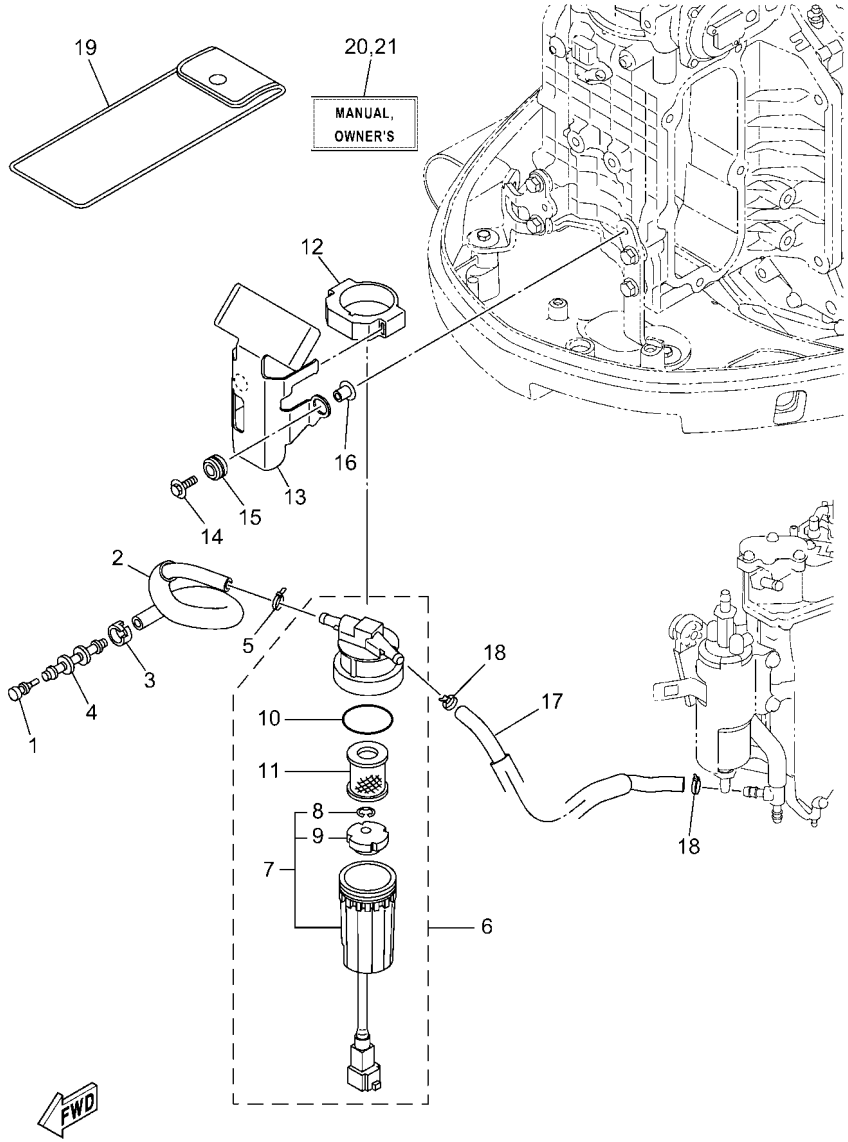

6ML1300-Y150

FIG. 15 FUEL 1 — CARBURANT 1

REF. NO.	PART NO. N° PIECES	DESCRIPTION DESCRIPTION	SA	NSA	NSA2	6MM1		REMARKS REMARQUES
1	689–85547–01	DAMPER AMORTISSEUR	1	1	1	1		
2	6ML–24314–00	PIPE 4 DURITE 4	1	1	1	1		
3	6E5–24351–51	BAND 1 COLLIER 1	1	1	1	1		
4	6AW–24377–01	PIPE, JOINT 2 DURITE RACCORDEMENT 2	1	1	1	1		
5	90465–11M10	CLAMP BRIDE	1	1	1	1		
6	6ML–24560–00	FILTER ASSY ENS FILTRE	1	1	1	1		
7	6P3–24562–21	.CUP, FILTER .CUVETTE, FILTRE	1	1	1	1		
8	6P3–24519–00	..CLIP ..JONC	1	1	1	1		
9	6P3–24469–00	..FLOAT, WATER LEVEL ..FLOTTEUR	1	1	1	1		
10	6P3–24564–00	.GASKET .JOINT	1	1	1	1		
11	6P3–24563–02	.ELEMENT, FILTER .ELEMENT, FILTRE	1	1	1	1		
12	6ML–24568–00	BAND, FILTER COLLIER, FILTRE	1	1	1	1		
13	6ML–24566–00	BRACKET, FILTER SUPPORT, FILTRE	1	1	1	1		
14	90119–06310	BOLT, WITH WASHER BOULON, AVEC RONDELLE	2	2	2	2		
15	90480–10M23	GROMMET PASSE-FIL	2	2	2	2		
16	90387–06289	COLLAR COLLERETTE	2	2	2	2		
17	6ML–24313–00	PIPE 3 DURITE 3	1	1	1	1		
18	90465–11M10	CLAMP BRIDE	2	2	2	2		
19	6ML–28100–00	TOOL KIT TROUSSE A OUTILS	1	1	1	1		AP AP
20	6ML–28199–70–E0	MANUAL,OWNER'S MANUEL D'UTILISATION	1	1	1	1		UR (E) UR (E)
	6ML–28199–70–F0	MANUAL,OWNER'S MANUEL D'UTILISATION	1	1	1	1		UR (F) UR (F)
	6ML–28199–70–S0	MANUAL,OWNER'S MANUEL D'UTILISATION	1	1	1	1		UR (ES) UR (ES)
	6ML–28199–70–G0	MANUAL,OWNER'S MANUEL D'UTILISATION	1	1	1	1		UR (D) UR (D)
	6ML–28199–70–D0	MANUAL,OWNER'S MANUEL D'UTILISATION	1	1	1	1		UR (NL) UR (NL)
	6ML–28199–70–H0	MANUAL,OWNER'S MANUEL D'UTILISATION	1	1	1	1		UR (I) UR (I)
21	6ML–28199–80–K0	MANUAL,OWNER'S MANUEL D'UTILISATION	1	1	1	1		UR (DK) UR (DK)
	6ML–28199–80–R0	MANUAL,OWNER'S MANUEL D'UTILISATION	1	1	1	1		UR (GR) UR (GR)

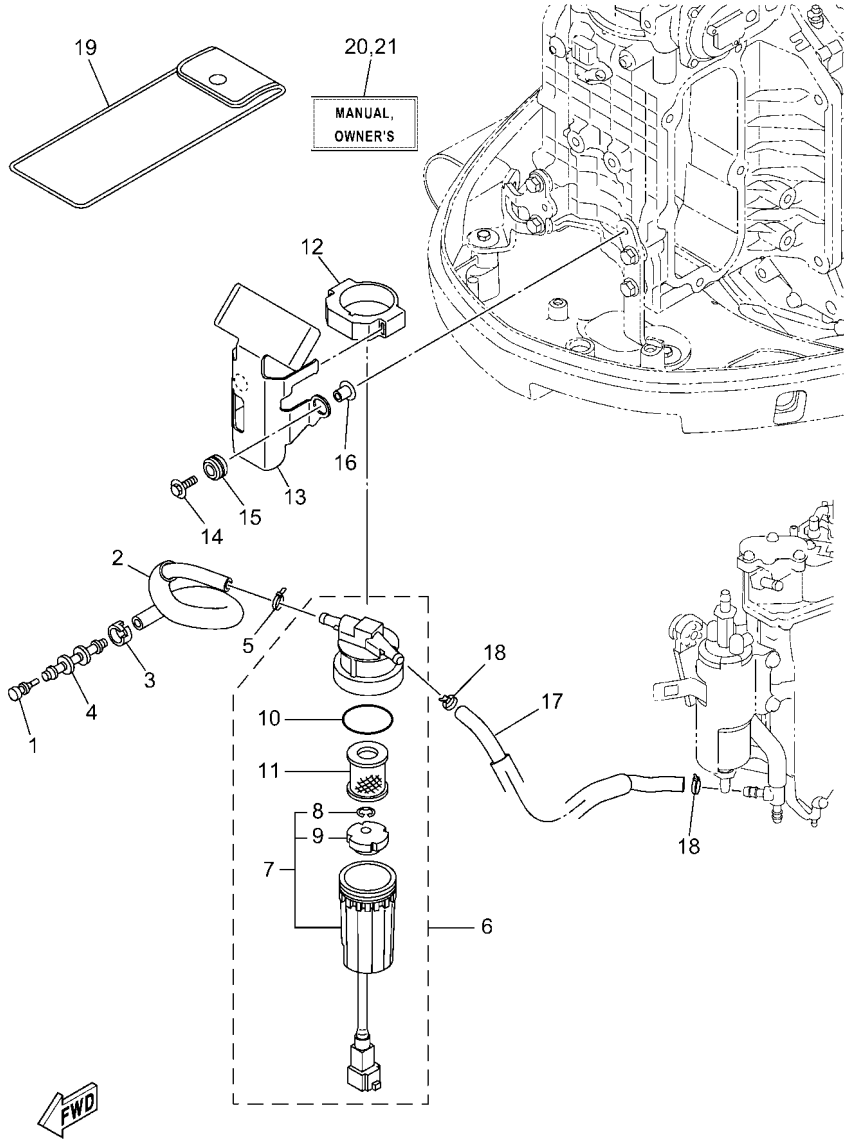

6ML1300-Y150

FIG. 15 FUEL 1 — CARBURANT 1

REF. NO.	PART NO. N° PIECES	DESCRIPTION DESCRIPTION	SA	NSA	NSA2	6MM1		REMARKS REMARQUES
21	6ML–28199–80–P0	MANUAL,OWNER'S MANUEL D'UTILISATION	1	1	1	1		UR (P) UR (P)
	6ML–28199–80–N0	MANUAL,OWNER'S MANUEL D'UTILISATION	1	1	1	1		UR (N) UR (N)
	6ML–28199–80–M0	MANUAL,OWNER'S MANUEL D'UTILISATION	1	1	1	1		UR (S) UR (S)
	6ML–28199–80–L0	MANUAL,OWNER'S MANUEL D'UTILISATION	1	1	1	1		UR (SF) UR (SF)

FIG. 16 FUEL 2 — CARBURANT 2

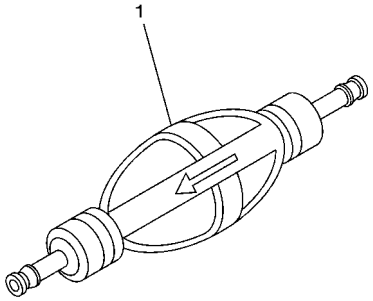

68V9110-J110

REF. NO.	PART NO. N° PIECES	DESCRIPTION DESCRIPTION	SA	NSA	NSA2	6MM1		REMARKS REMARQUES
1	6AW–24360–02	PRIMER PUMP ASSY POMPE D'AMORCAGE	1	1	1	1		AP AP

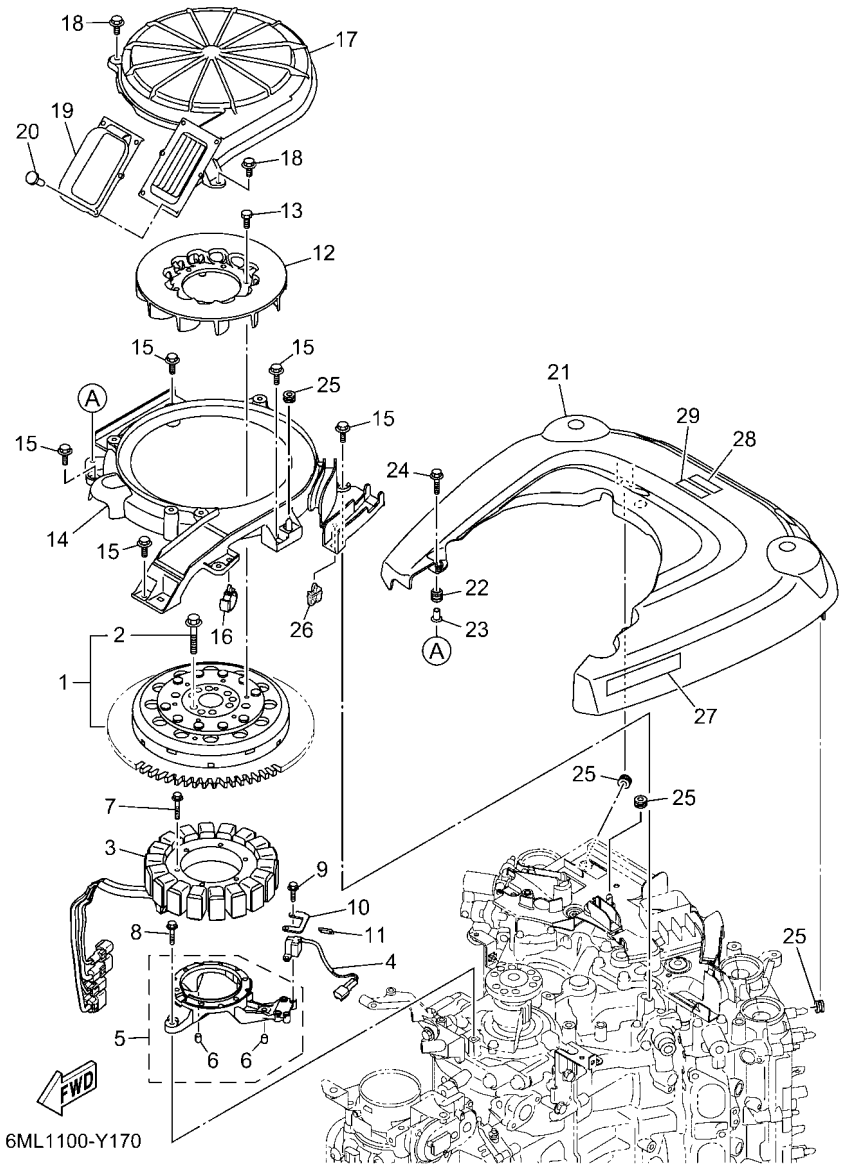

FIG. 17 GENERATOR — GENERATRICE

REF. NO.	PART NO. N° PIECES	DESCRIPTION DESCRIPTION	SA	NSA	NSA2	6MM1		REMARKS REMARQUES
1	6ML–W8145–00	ROTOR ASSY WITH BOLTS ROTOR COMPLET AVEC BOULON	1	1	1	1		
2	6EK–W9010–00	.BOLT SET .BOULON ENS.	1	1	1	1		
3	6ML–81410–00	STATOR ASSY STATOR COMPLET	1	1	1	1		
4	6CB–85580–00	COIL, PULSER BOBINE, PULSEUR	1	1	1	1		
5	6CB–85561–00	BASE, MAGNETO BASE, MAGNETO	1	1	1	1		
6	99530–08012	.PIN, DOWEL .GOUJON, D'ASSEMBLAGE	2	2	2	2		
7	95022–06035	BOLT, FLANGE BOULON, A COLLERETTE	6	6	6	6		
8	95D95–06030	BOLT, FLANGE DEEP RECESS BOULON FIXATION	4	4	4	4		
9	90119–05M03	BOLT, WITH WASHER BOULON, AVEC RONDELLE	2	2	2	2		
10	6ML–85592–00	STAY, PULSER SUPPORT, PULSATION BOBINE	1	1	1	1		
11	90465–11M10	CLAMP BRIDE	1	1	1	1		
12	6ML–85586–00	FAN VENTILATEUR	1	1	1	1		
13	97E95–06516	BOLT, HEXAGON W/W DEEP RECESS VIS HEXAGONAL AVC RONDELLE	6	6	6	6		
14	6ML–12651–00	AIR SHROUD, CYLINDER 1 COUVERCLE, CYLINDRE 1	1	1	1	1		
15	95D95–06016	BOLT, FLANGE DEEP RECESS BOULON FIXATION	5	5	5	5		
16	90464–12183	CLAMP BRIDE	1	1	1	1		
17	6ML–12653–00	AIR SHROUD, CYLINDER 3 COUVERCLE, CYLINDRE 3	1	1	1	1		
18	95D95–06012	BOLT, FLANGE DEEP RECESS BOULON FIXATION	4	4	4	4		
19	6ML–12659–00	DAMPER, AIR SHROUD 2 AMORTISSEUR, COUVERCLE 2	1	1	1	1		
20	90269–05001	RIVET RIVET	6	6	6	6		
21	6ML–81942–00	COVER COUVERCLE	1	1	1	1		
22	6A0–82317–01	DAMPER, IGNITION COIL AMORTISSEUR, BOBINE D'ALLUM	1	1	1	1		
23	90387–06119	COLLAR COLLERETTE	1	1	1	1		
24	95D95–06025	BOLT, FLANGE DEEP RECESS BOULON FIXATION	1	1	1	1		
25	90480–12314	GROMMET PASSE-FIL	4	4	4	4		
26	90464–11121	CLAMP BRIDE	1	1	1	1		
27	6ML–13437–60	MARK, CAUTION MAKER	1	1	1	1		

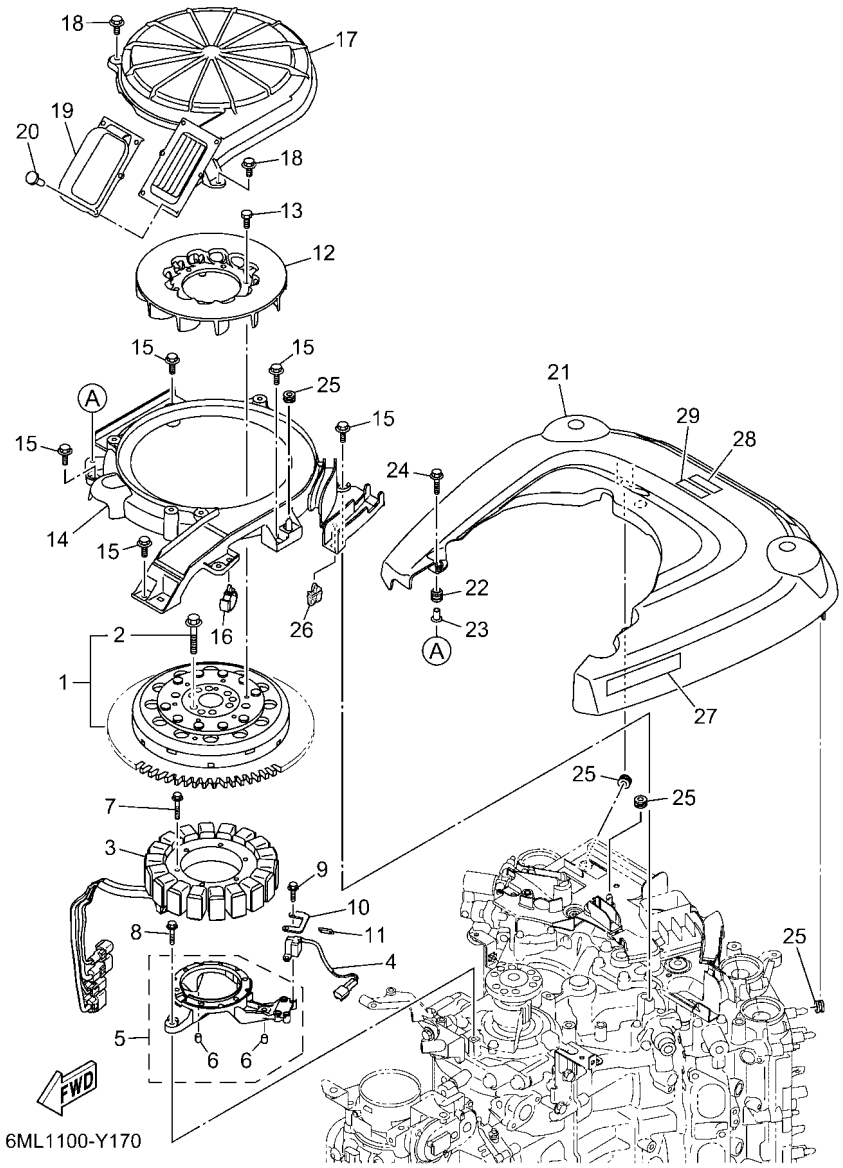

FIG. 17 GENERATOR — GENERATRICE

REF. NO.	PART NO. N° PIECES	DESCRIPTION DESCRIPTION	SA	NSA	NSA2	6MM1		REMARKS REMARQUES
28	6EE–81994–40	LABEL, SAFETY ETIQUETTE, SECURITE	1	1	1	1		
29	6EE–81994–50	LABEL, SAFETY ETIQUETTE, SECURITE	1	1	1	1		

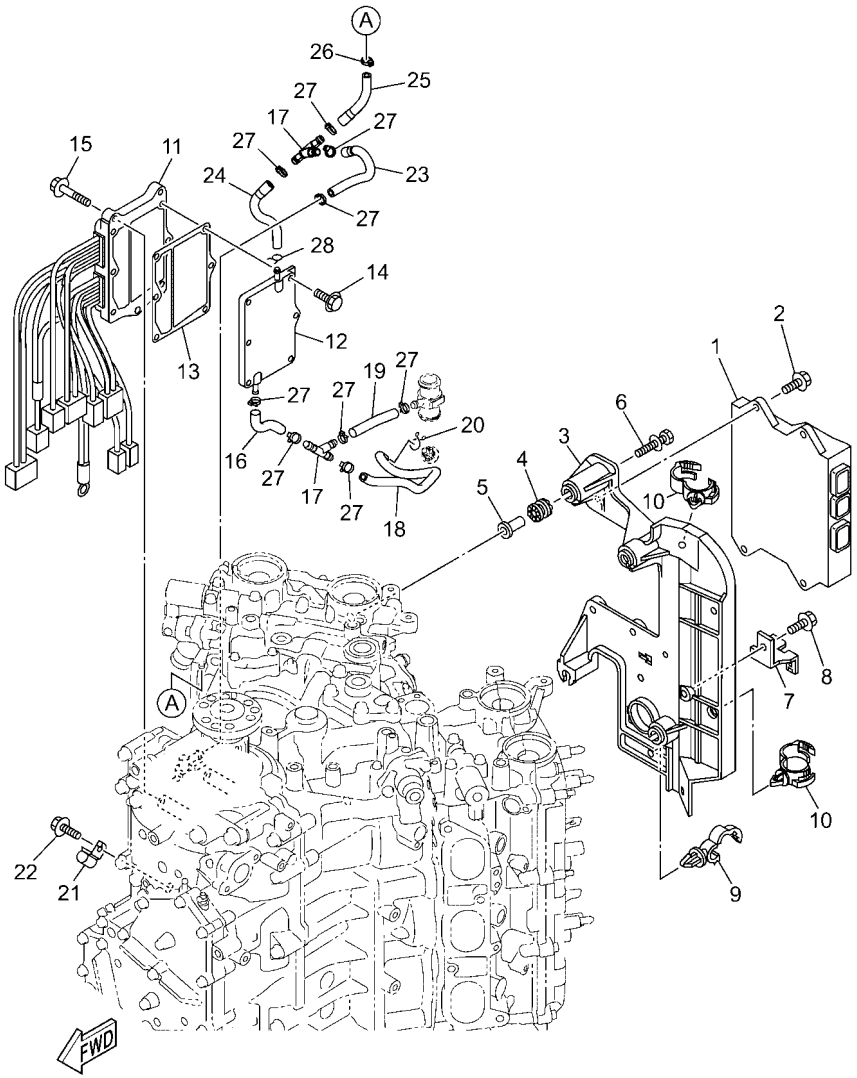

6ML1100-Y180

FIG. 18 ELECTRICAL 1 — PARTIE ELECTRIQUE 1

REF. NO.	PART NO. N° PIECES	DESCRIPTION DESCRIPTION	SA	NSA	NSA2	6MM1		REMARKS REMARQUES
1	6ML–8591A–00	ENGINE CONTROL UNIT ASSY BLOC DE CONTROL	1	1	1	1		
2	95D95–06020	BOLT, FLANGE DEEP RECESS BOULON FIXATION	4	4	4	4		
3	6CB–82316–01	BRACKET, IGNITION COIL SUPPORT, BOBINE D'ALLUMAGE	1	1	1	1		
4	64J–85516–01	SPACER ENTRETOISE	4	4	4	4		
5	69M–42758–01	COLLAR ENTRETOISE	4	4	4	4		
6	90119–06293	BOLT, WITH WASHER BOULON, AVEC RONDELLE	4	4	4	4		
7	6BR–81845–00	PLATE PLAQUE	1	1	1	1		
8	95D95–06012	BOLT, FLANGE DEEP RECESS BOULON FIXATION	1	1	1	1		
9	90464–13249	CLAMP BRIDE	1	1	1	1		
10	90464–20181	CLAMP BRIDE	2	2	2	2		
11	6CE–81960–10	RECTIFIER & REGULATOR ASSY REDRESSEUR REGULATEUR CPLT	1	1	1	1		
12	6CE–81972–00–9S	COVER, RECTIFIER COUVERCLE, REDRESSEUR	1	1	1	1		
13	6CE–81975–00	PLATE, RECTIFIER FITTING PLAQUE, FIXATION DU REDRESSEUR	1	1	1	1		
14	90119–06MA3	BOLT, WITH WASHER BOULON, AVEC RONDELLE	6	6	6	6		
15	95D95–06025	BOLT, FLANGE DEEP RECESS BOULON FIXATION	3	3	3	3		
16	6CE–1248A–00	PIPE 8 DURITE 8	1	1	1	1		
17	6CE–24377–00	PIPE, JOINT 2 DURITE RACCORDEMENT 2	2	2	2	2		
18	6CE–12483–00	PIPE 3 DURITE 3	1	1	1	1		
19	90445–107A5	HOSE (L30) DURITE (L30)	1	1	1	1		
20	90467–09M09	CLIP JONC	1	1	1	1		
21	90462–06013	CLAMP BRIDE	1	1	1	1		
22	95023–06012	BOLT BOULON, A COLLERETTE	1	1	1	1		
23	6ML–14872–00	PIPE 2 DURITE 2	1	1	1	1		
24	6ML–12485–00	PIPE 5 DURITE 5	1	1	1	1		
25	6ML–12483–00	PIPE 3 DURITE 3	1	1	1	1		
26	90465–11M10	CLAMP BRIDE	1	1	1	1		
27	90465–11M10	CLAMP BRIDE	9	9	9	9		

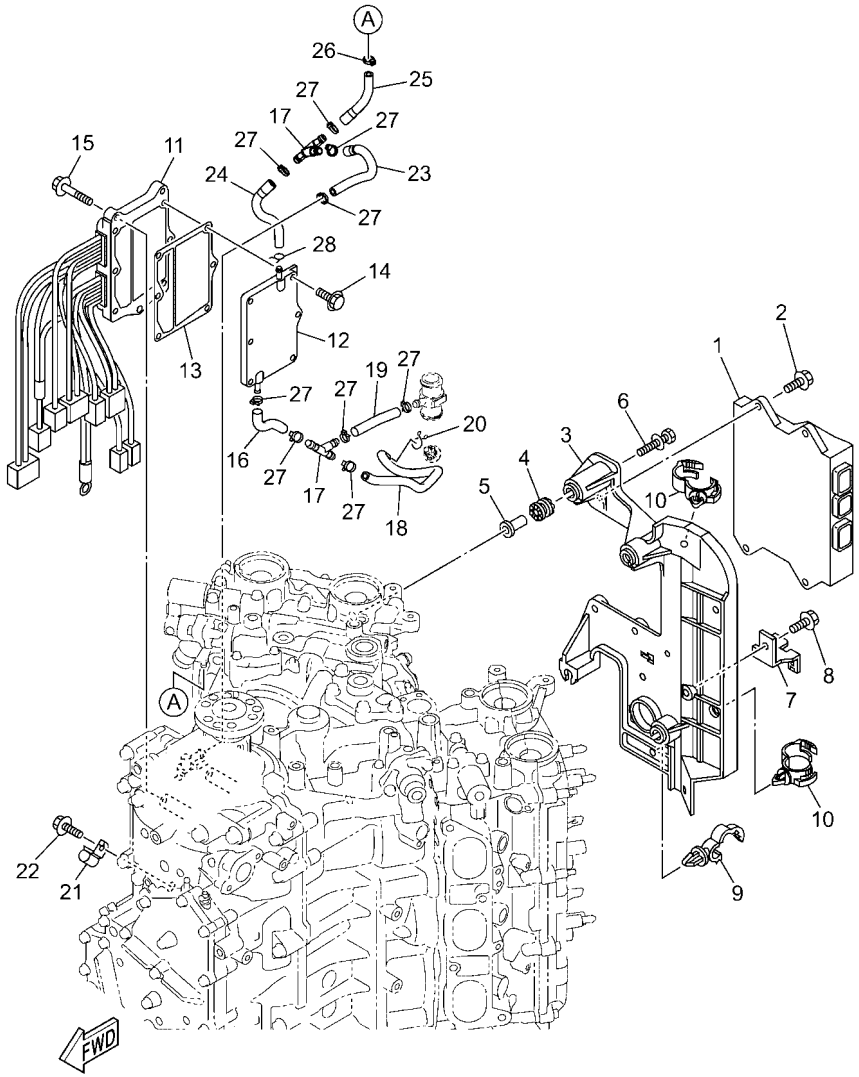

6ML1100-Y180

FIG. 18 ELECTRICAL 1 — PARTIE ELECTRIQUE 1

REF. NO.	PART NO. N° PIECES	DESCRIPTION DESCRIPTION	SA	NSA	NSA2	6MM1		REMARKS REMARQUES
28	90467–08M18	CLIP JONC	1	1	1	1		

FIG. 19 ELECTRICAL 2 — PARTIE ELECTRIQUE 2

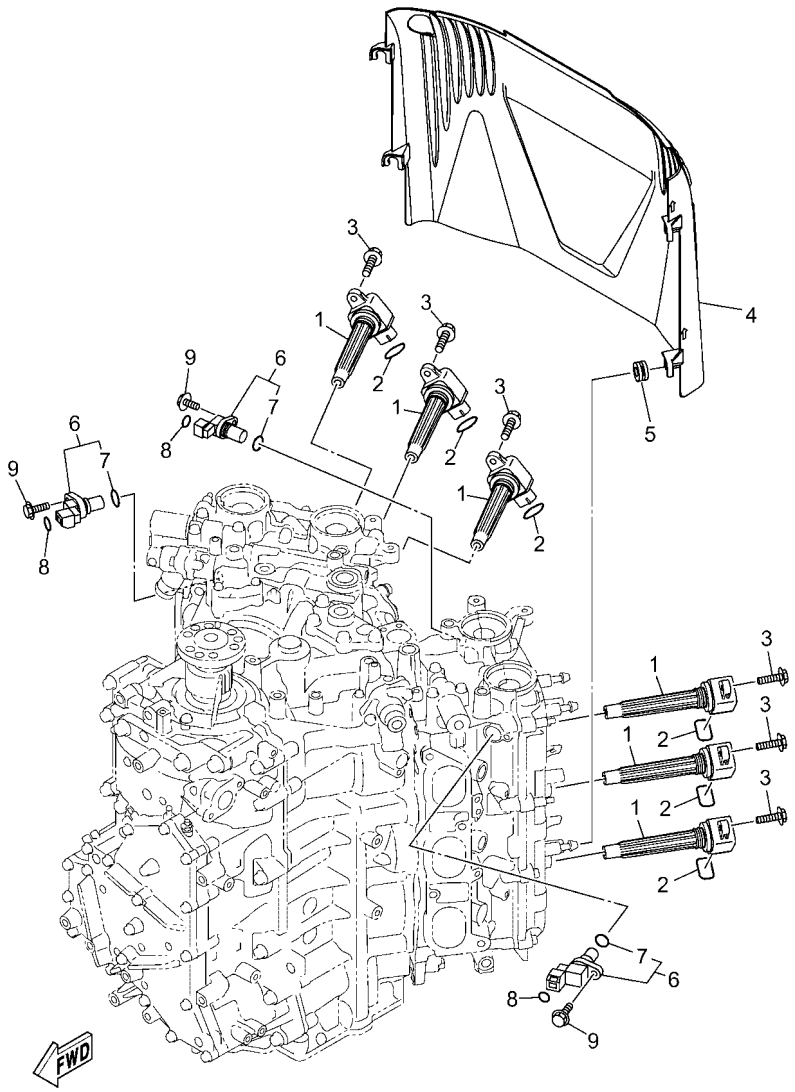

6ML1100-Y190

REF. NO.	PART NO. N° PIECES	DESCRIPTION DESCRIPTION	SA	NSA	NSA2	6MM1		REMARKS REMARQUES
1	6ML–82310–00	IGNITION COIL ASSY BOBINE D'ALLUMAGE	6	6	6	6		
2	93210–19001	O-RING JOINT TORIQUE	6	6	6	6		
3	95D95–06025	BOLT, FLANGE DEEP RECESS BOULON FIXATION	6	6	6	6		
4	6CB–82314–00	COVER, IGNITION COIL COUVERCLE, BOBINE D'ALLUMAGE	1	1	1	1		
5	90480–12314	GROMMET PASSE-FIL	4	4	4	4		
6	6P2–85896–00	SENSOR, CAM POSITION SONDE DE CAME	3	3	3	3		
7	6P2–85075–00	.O-RING .JOINT TORIQUE	1	1	1	1		
8	93210–11001	O-RING JOINT TORIQUE	3	3	3	3		
9	97E95–06520	BOLT, HEXAGON W/W DEEP RECESS VIS HEXAGONAL AVC RONDELLE	3	3	3	3		

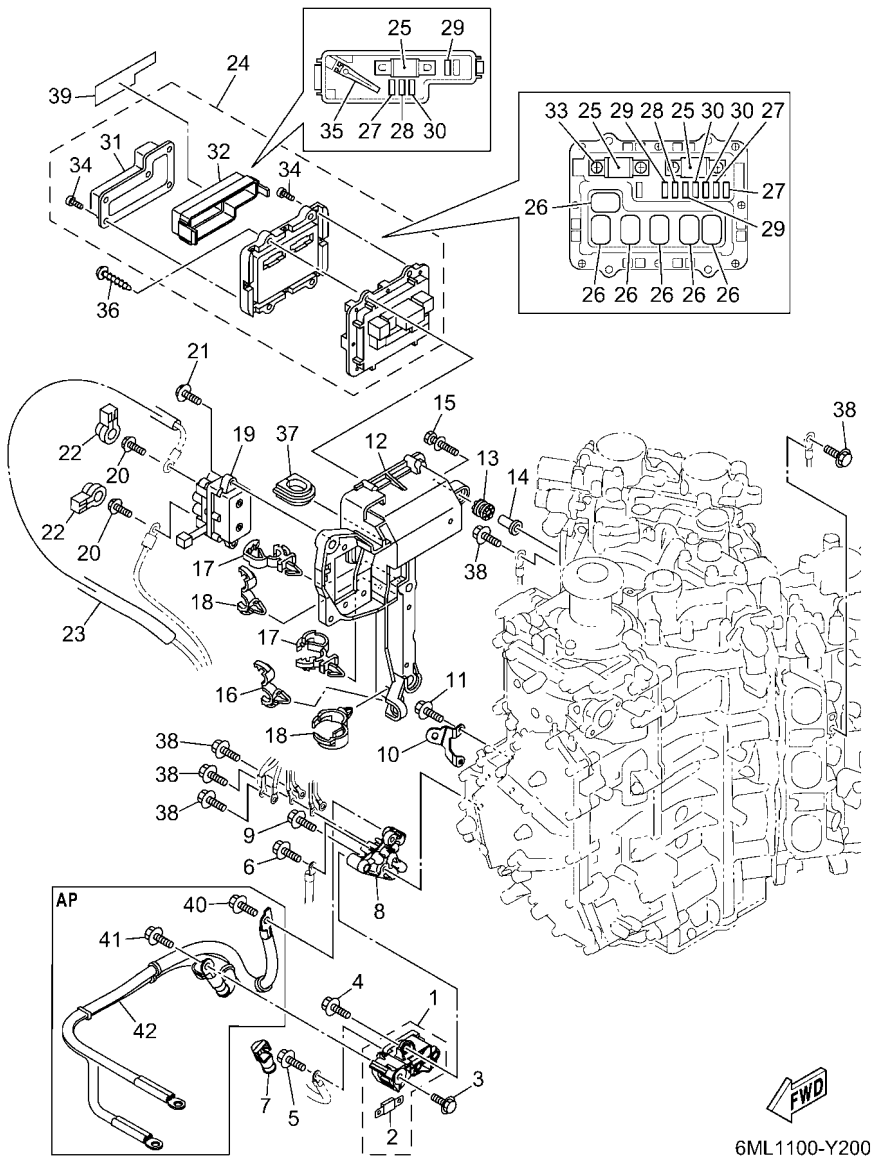

FIG. 20 ELECTRICAL 3 — PARTIE ELECTRIQUE 3

REF. NO.	PART NO. N° PIECES	DESCRIPTION DESCRIPTION	SA	NSA	NSA2	6MM1		REMARKS REMARQUES
1	6KA–81920–00	TERMINAL ASSY BORNE	1	1	1	1		
2	6GR–82151–00	.FUSE (100A) .FUSIBLE (100A)	2	2	2	2		
3	95D95–08016	BOLT, FLANGE DEEP RECESS BOULON FIXATION	1	1	1	1		
4	95D95–08020	BOLT, FLANGE DEEP RECESS BOULON FIXATION	2	2	2	2		
5	97E95–06516	BOLT, HEXAGON W/W DEEP RECESS VIS HEXAGONAL AVC RONDELLE	1	1	1	1		
6	97E95–06516	BOLT, HEXAGON W/W DEEP RECESS VIS HEXAGONAL AVC RONDELLE	1	1	1	1		
7	6GR–82119–00	COVER, LEAD WIRE GARNITURE, FIL	1	1	1	1		
8	6ML–81929–00	BRACKET, TERMINAL SUPPORT	1	1	1	1		
9	95D95–06020	BOLT, FLANGE DEEP RECESS BOULON FIXATION	2	2	2	2		
10	6ML–82588–00	PLATE PLAQUE	1	1	1	1		
11	95D95–06016	BOLT, FLANGE DEEP RECESS BOULON FIXATION	2	2	2	2		
12	6CB–81948–02	BRACKET SUPPORT	1	1	1	1		
13	64J–85516–01	SPACER ENTRETOISE	5	5	5	5		
14	69M–42758–01	COLLAR ENTRETOISE	5	5	5	5		
15	90119–06293	BOLT, WITH WASHER BOULON, AVEC RONDELLE	5	5	5	5		
16	90464–13249	CLAMP BRIDE	1	1	1	1		
17	90464–12183	CLAMP BRIDE	2	2	2	2		
18	90464–20181	CLAMP BRIDE	2	2	2	2		
19	6AW–81950–00	RELAY ASSY RELAIS COMPLET	1	1	1	1		
20	97E95–06610	BOLT, HEXAGON W/W DEEP RECESS VIS HEXAGONAL AVC RONDELLE	2	2	2	2		
21	97513–06520	BOLT, WITH WASHER VIS HEXAGONAL AVC RONDELLE	2	2	2	2		
22	6P2–8183X–00	CAP, TERMINAL COUVERCLE, BORNE	2	2	2	2		
23	90446–15006	HOSE (L150) DURITE (L150)	1	1	1	1		
24	6ML–82170–00	FUSE BOX ASSY BOITE A FUSIBLES	1	1	1	1		
25	6CE–82151–00	.FUSE (100A) .FUSIBLE (100A)	3	3	3	3		
26	6AW–8195A–00	.RELAY ASSY .RELAIS COMPLET	6	6	6	6		
27	67F–82151–40	.FUSE (10A) .FUSIBLE (10A)	3	3	3	3		

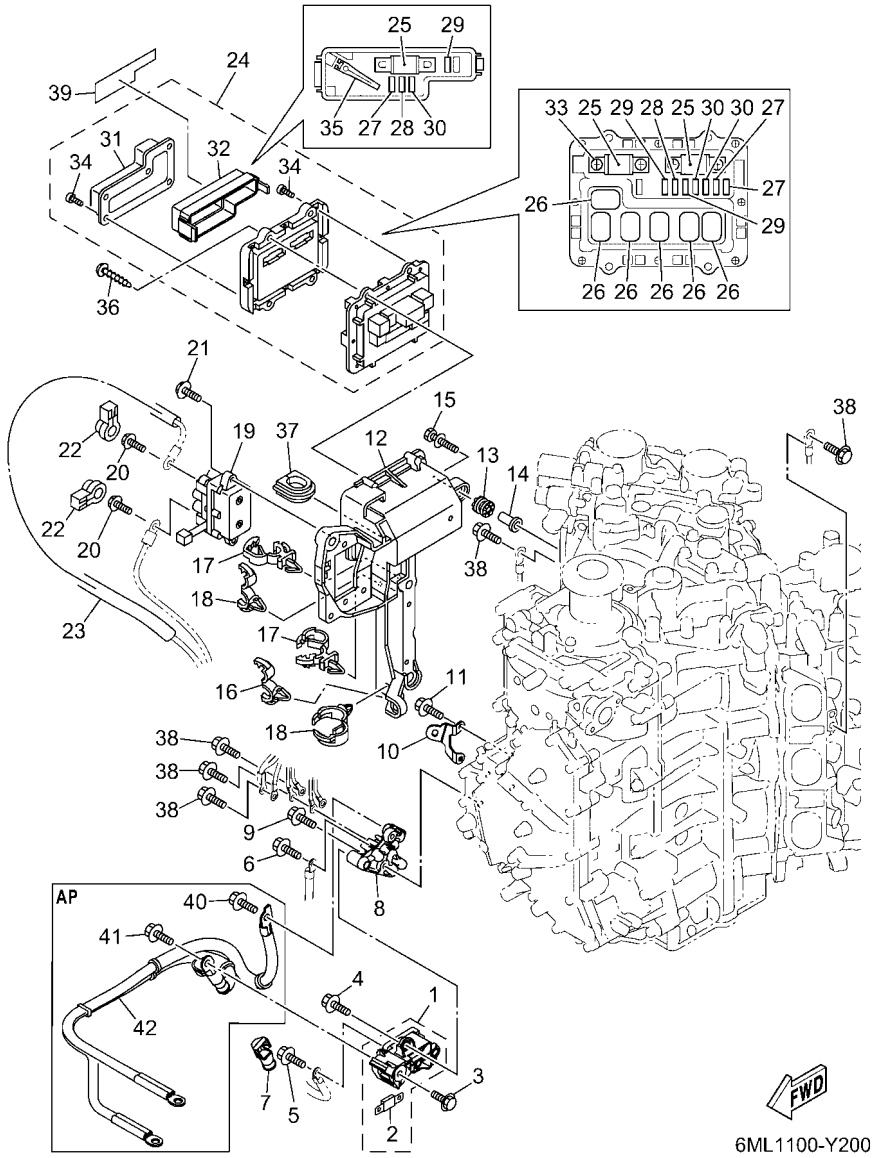

FIG. 20 ELECTRICAL 3 — PARTIE ELECTRIQUE 3

REF. NO.	PART NO. N° PIECES	DESCRIPTION DESCRIPTION	SA	NSA	NSA2	6MM1		REMARKS REMARQUES
28	67F–82151–50	.FUSE (15A) .FUSIBLE (15A)	2	2	2	2		
29	67F–82151–00	.FUSE (20A) .FUSIBLE (20A)	3	3	3	3		
30	67F–82151–10	.FUSE (30A) .FUSIBLE (30A)	3	3	3	3		
31	6CB–81639–10	.COVER .COUVERCLE	1	1	1	1		
32	6CB–85544–00	.CASE .BOITIER	1	1	1	1		
33	68F–82846–00	.SCREW, PAN HEAD (M5) .VIS, TETE TRONCONIQUE (M5)	4	4	4	4		
34	6P2–82113–00	.SCREW (M3) .VIS (M3)	13	13	13	13		
35	67F–2812A–00	.PULLER, FUSE .TENDEUR, FUSIBLE	1	1	1	1		
36	97780–50620	SCREW, TAPPING VIS, TETE BOMBEE	4	4	4	4		
37	6P2–81336–01	GROMMET OEILLET CAOUTCHOUC	1	1	1	1		
38	97E95–06516	BOLT, HEXAGON W/W DEEP RECESS VIS HEXAGONAL AVC RONDELLE	5	5	5	5		
39	6ML–81919–00	GRAPHIC, REGULATOR ADHESIF, REGULATEUR	1	1	1	1		
40	97E95–08516	BOLT, HEXAGON W/W DEEP RECESS VIS HEXAGONAL AVC RONDELLE	1	1	1	1		AP AP
41	97E95–08516	BOLT, HEXAGON W/W DEEP RECESS VIS HEXAGONAL AVC RONDELLE	1	1	1	1		AP AP
42	6ML–82105–00	WIRE HARNESS FAISCEAU DE FILS	1	1	1	1		AP AP

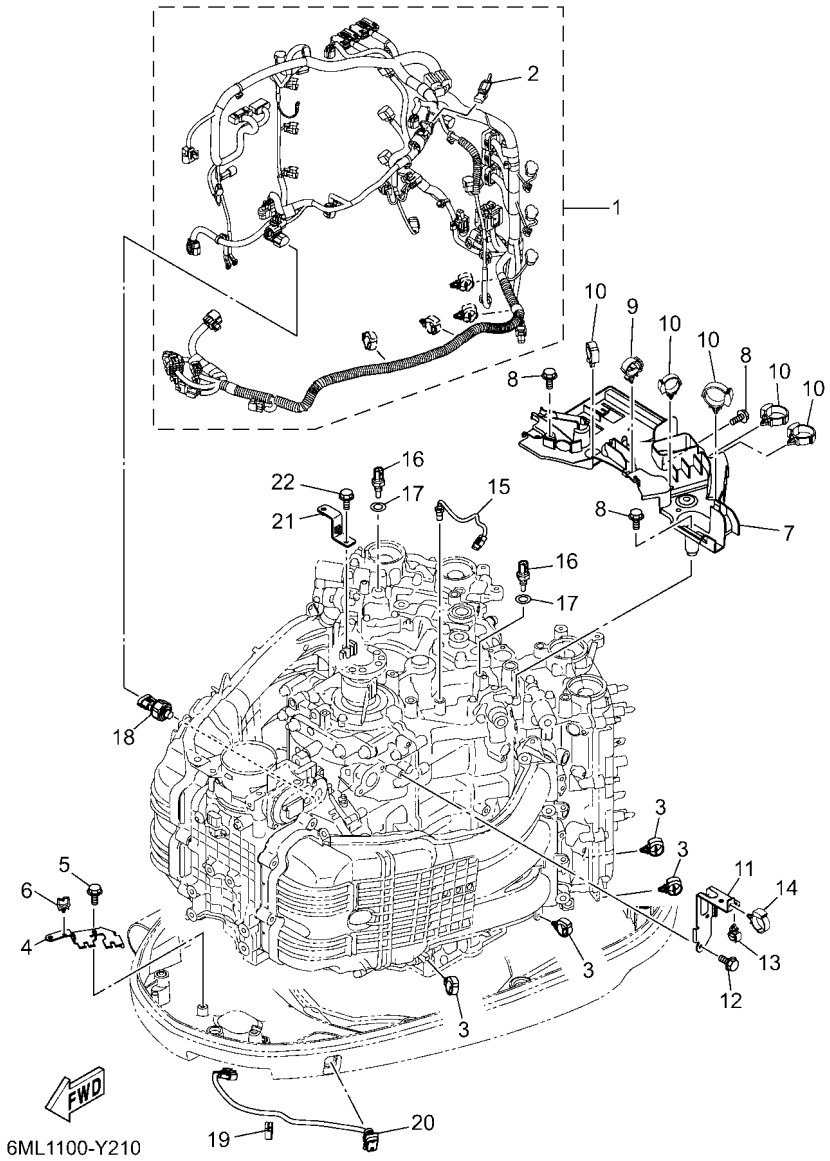

FIG. 21 ELECTRICAL 4 — PARTIE ELECTRIQUE 4

REF. NO.	PART NO. N° PIECES	DESCRIPTION DESCRIPTION	SA	NSA	NSA2	6MM1		REMARKS REMARQUES
1	6ML–82590–00	WIRE HARNESS ASSY FAISCEAU DE FILS COMPLET	1	1	1	1		
2	6CE–81980–01	.DIODE ASSY .REDRESSEUR 2	1	1	1	1		
3	90464–20181	CLAMP BRIDE	4	4	4	4		
4	6ML–82594–00	CLAMP BRIDE	1	1	1	1		
5	95D95–06012	BOLT, FLANGE DEEP RECESS BOULON FIXATION	2	2	2	2		
6	90464–08004	CLAMP BRIDE	1	1	1	1		
7	6ML–82589–00	PROTECTER, WIRE HARNESS PROTECTEUR, FAISCEAU DE FILS	1	1	1	1		
8	95D95–06020	BOLT, FLANGE DEEP RECESS BOULON FIXATION	3	3	3	3		
9	90464–18246	CLAMP BRIDE	1	1	1	1		
10	90464–12183	CLAMP BRIDE	5	5	5	5		
11	6ML–82388–00	PLATE PLAQUETTE	1	1	1	1		
12	95D95–06016	BOLT, FLANGE DEEP RECESS BOULON FIXATION	2	2	2	2		
13	90464–13249	CLAMP BRIDE	1	1	1	1		
14	90464–12183	CLAMP BRIDE	1	1	1	1		
15	6CB–85790–00	THERMOSENSOR ASSY SENSITOMETRE	1	1	1	1		
16	6ML–85790–00	THERMOSENSOR ASSY SENSITOMETRE	2	2	2	2		
17	90430–10004	GASKET JOINT	2	2	2	2		
18	6AW–83651–01	SENDER, OIL PRESSURE RACCORD, PRESSION D'HUILE	1	1	1	1		
19	90464–16001	CLAMP BRIDE	1	1	1	1		
20	6GR–82563–00	TRIM & TILT SWITCH ASSY INCLINER ET PARER COMMUTATEUR	1	1	1	1		
21	6CB–81952–00	HOLDER, RELAY SUPPORT, RELAIS	1	1	1	1		
22	95D95–06016	BOLT, FLANGE DEEP RECESS BOULON FIXATION	1	1	1	1		

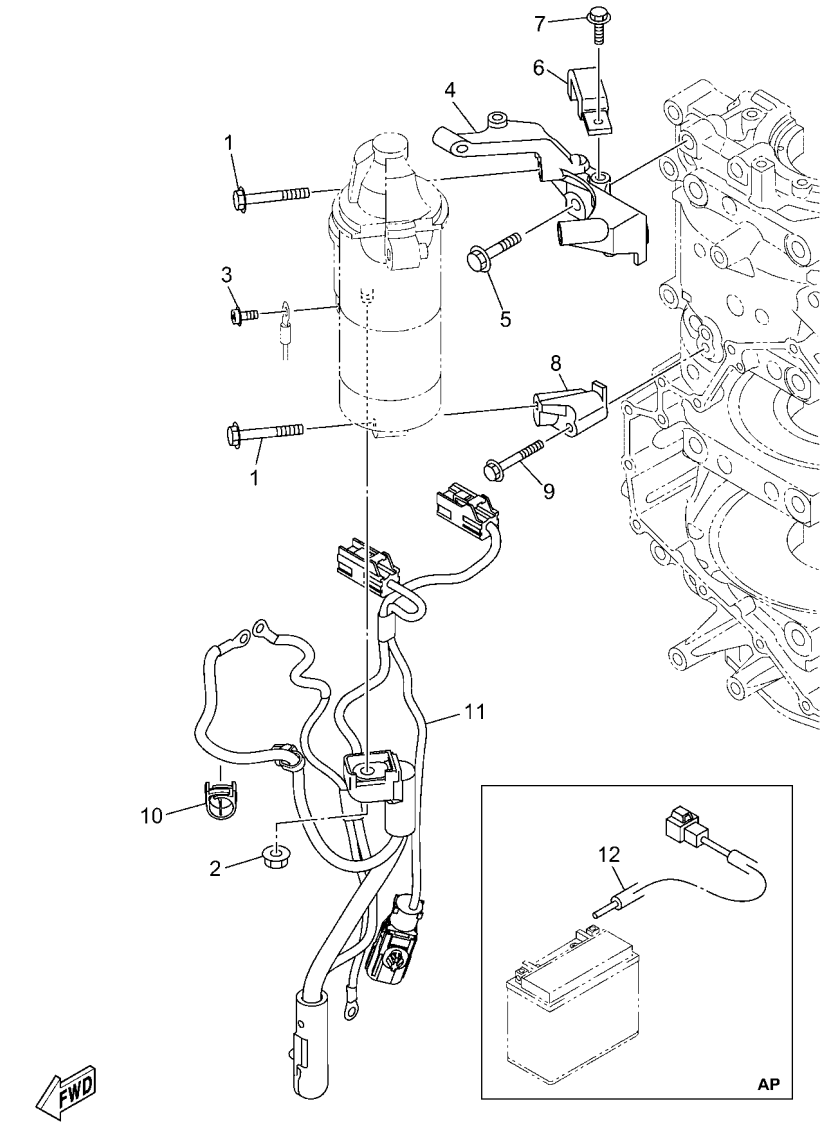

6ML1100-Y220

FIG. 22 ELECTRICAL 5 — PARTIE ELECTRIQUE 5

REF. NO.	PART NO. N° PIECES	DESCRIPTION DESCRIPTION	SA	NSA	NSA2	6MM1		REMARKS REMARQUES
1	97513–08545	BOLT, WITH WASHER VIS HEXAGONAL AVC RONDELLE	3	3	3	3		
2	90179–08003	NUT ECROU	1	1	1	1		
3	97985–04308	SCREW, WITH WASHER VIS, AVEC RONDELLE	1	1	1	1		
4	6ML–81822–00	BRACKET, STARTING MOTOR SUPPORT, DEMARREUR ELECTRIQUE	1	1	1	1		
5	90105–08M87	BOLT, FLANGE BOULON, A COLLERETTE	2	2	2	2		
6	6CB–81443–00	CLAMP, LEAD 1 BRIDE, FIL 1	1	1	1	1		
7	95D95–06016	BOLT, FLANGE DEEP RECESS BOULON FIXATION	1	1	1	1		
8	6CB–81823–A0	STAY, STARTING MOTOR SUPPORT	1	1	1	1		
9	90105–06151	BOLT, FLANGE BOULON, A COLLERETTE	1	1	1	1		
10	90464–18004	CLAMP BRIDE	1	1	1	1		
11	6KA–8259M–01	WIRE HARNESS ASSY 2 FAISCEAU DE FILS	1	1	1	1		
12	6KW–81949–00	WIRE, LEAD (ISOLATOR, 3.8M) FIL (ISOLATOR, 3.8M)	1	1	1	1		AP AP

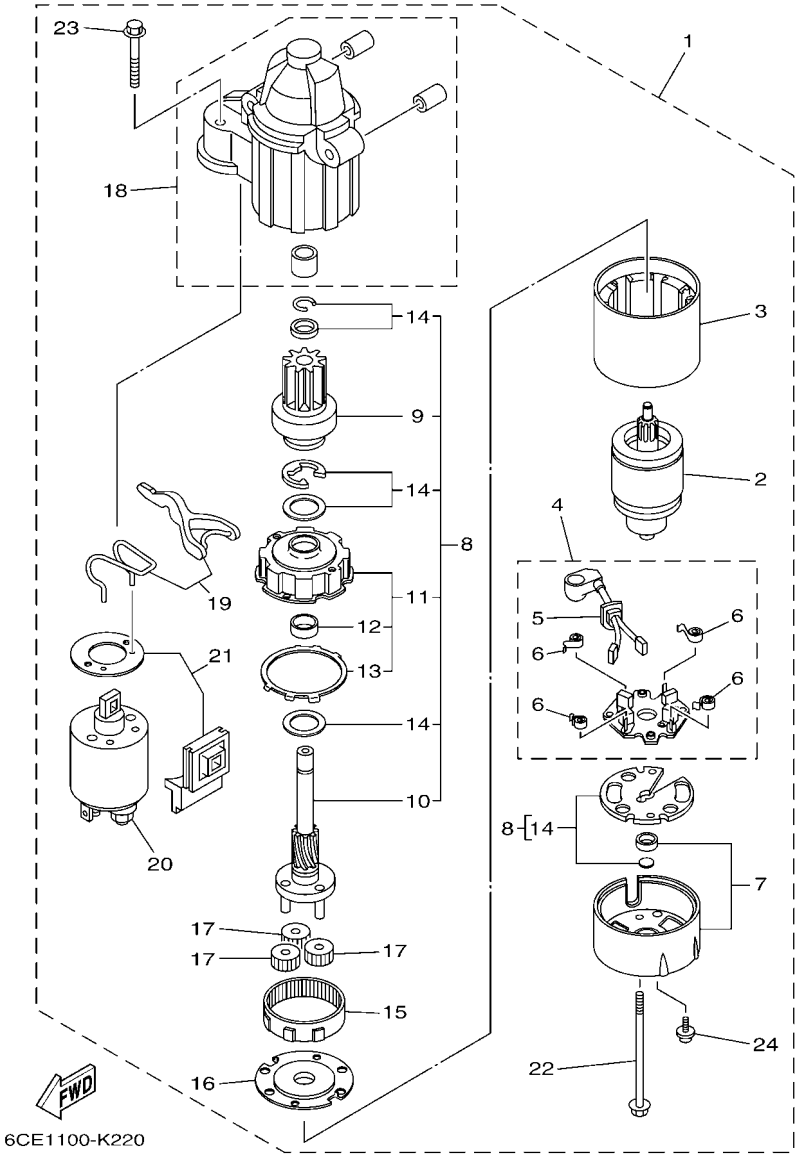

FIG. 23 STARTING MOTOR — DEMARREUR ELECTRIQUE

REF. NO.	PART NO. N° PIECES	DESCRIPTION DESCRIPTION	SA	NSA	NSA2	6MM1		REMARKS REMARQUES
1	6CE–81800–02	STARTING MOTOR ASSY DEMARREUR ELECTRIQUE COMPLET	1	1	1	1		
2	6CE–81850–00	.ARMATURE ASSY .INDUIT	1	1	1	1		
3	6CE–81810–00	.STATOR ASSY .STATOR COMPLET	1	1	1	1		
4	6CE–81840–01	.BRUSH HOLDER ASSY .SUPPORT DE CHARBON	1	1	1	1		
5	6CE–81801–01	..BRUSH SET ..JEU DE BROSSE	1	1	1	1		
6	67F–81813–00	..SPRING, BRUSH ..RESSORT, DE CHARBON	4	4	4	4		
7	6CE–81820–00	.REAR BRACKET ASSY .SUPPORT ARRIERE COMPLET	1	1	1	1		
8	6CE–81807–00	.GEAR ASSY, STARTING MOTOR .PIGNON, DEMARREUR ELECTRIQUE	1	1	1	1		
9	6CB–81832–00	..CLUTCH, OVER RUN ..EMBRAYAGE, ROUE LIBRE	1	1	1	1		
10	6CB–81836–00	..SHAFT, PINION ..AXE, PIGNON	1	1	1	1		
11	6CE–81821–00	..BRACKET, CENTER 1 ..SUPPORT, CENTRE 1	1	1	1	1		
12	67F–81841–00	...BEARING ...ROULEMENT	1	1	1	1		
13	67F–8183R–00	...GASKET ...JOINT	1	1	1	1		
14	6CB–81809–00	..WASHER KIT ..JEU DE RONDELLES	1	1	1	1		
15	67F–81891–00	.GEAR, RING .ROUE DENTEE	1	1	1	1		WITH 67F-8183R-00 WITH 67F-8183R-00
16	6CE–81830–00	.BRACKET, CENTER 2 .SUPPORT, CENTRE 2	1	1	1	1		
17	60V–8183T–00	.GEAR, IDLER .PIGNON, INTERMEDIAIRE	3	3	3	3		
18	6CE–81842–00	.COVER .COUVERCLE	1	1	1	1		
19	6CE–81839–00	.LEVER ASSY .LEVIER COMPLET	1	1	1	1		
20	6C5–81941–01	.STARTER RELAY ASSY .LANCEUR RELAIS (ENS.)	1	1	1	1		
21	6CE–81869–00	.COVER, DUST .COUVERCLE, POUSSIERE	1	1	1	1		
22	6CB–81826–00	.BOLT .BOULON	2	2	2	2		
23	69J–81828–00	.BOLT 2 .BOULON 2	2	2	2	2		
24	67F–81846–00	.SCREW .VIS	2	2	2	2		

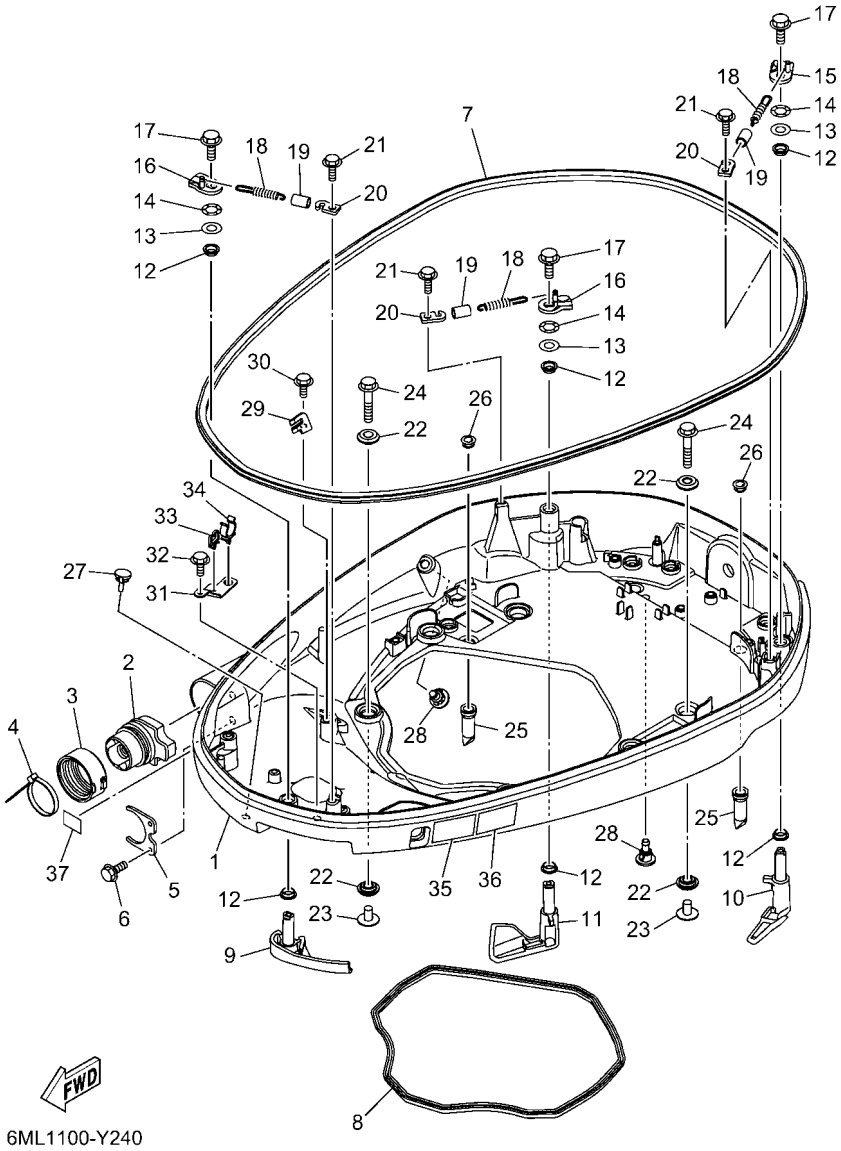

FIG. 24 BOTTOM COWLING 1 — CAPOT INFERIEUR 1

REF. NO.	PART NO. N° PIECES	DESCRIPTION DESCRIPTION	SA	NSA	NSA2	6MM1		REMARKS REMARQUES
1	6KA–42710–00–8D	BOTTOM COWLING ASSY ENS. EMBASE		1				GRAY GRAY
	6KA–42710–00–CE	BOTTOM COWLING ASSY ENS. EMBASE	1		1	1		WHITE WHITE
2	6KA–42725–01	GROMMET PASSE-FIL	1	1	1	1		
3	68F–42753–00	FASTNER ATTACHE	1	1	1	1		AP AP
4	90464–20258	CLAMP BRIDE	1	1	1	1		AP AP
5	6CB–42761–00	STOPPER PLAQUETTE	1	1	1	1		
6	95D95–06014	BOLT, FLANGE DEEP RECESS BOULON FIXATION	2	2	2	2		
7	6KA–42615–20	SEAL JOINT	1	1	1	1		
8	6CB–42716–01	RUBBER SEAL 1 JOINT EN CAOUTCHOUC 1	1	1	1	1		
9	6KA–42815–00–8D	LEVER, CLAMP 1 LEVIER, PRESSE 1		1				GRAY GRAY
	6KA–42815–00–CE	LEVER, CLAMP 1 LEVIER, PRESSE 1	1		1	1		WHITE WHITE
10	6KA–42816–00–8D	LEVER, CLAMP 2 LEVIER, PRESSE 2		1				GRAY GRAY
	6KA–42816–00–CE	LEVER, CLAMP 2 LEVIER, PRESSE 2	1		1	1		WHITE WHITE
11	6KA–42817–00–8D	LEVER, CLAMP 3 LEVIER, PRESSE 3		1				GRAY GRAY
	6KA–42817–00–CE	LEVER, CLAMP 3 LEVIER, PRESSE 3	1		1	1		WHITE WHITE
12	90386–15M73	BUSH DOUILLE	6	6	6	6		
13	90201–156J2	WASHER, PLATE RONDELLE, PLATE	3	3	3	3		
14	90206–15M18	WASHER, WAVE RONDELLE, ONDULEE	3	3	3	3		
15	6CB–42818–00	LEVER, CLAMP 4 LEVIER, PRESSE 4	1	1	1	1		
16	6CB–42819–00	LEVER, CLAMP 5 LEVIER, PRESSE 5	2	2	2	2		
17	95D95–08012	BOLT, FLANGE DEEP RECESS BOULON FIXATION	3	3	3	3		
18	90506–22001	SPRING, TENSION RESSORT, TENSION	3	3	3	3		
19	90445–15M03	HOSE (L23) DURITE (L23)	3	3	3	3		
20	66T–43144–00	HOOK, SPRING CROCHET	3	3	3	3		
21	95D95–06012	BOLT, FLANGE DEEP RECESS BOULON FIXATION	3	3	3	3		
22	90480–22M81	GROMMET PASSE-FIL	12	12	12	12		
23	90387–08M37	COLLAR COLLERETTE	6	6	6	6		

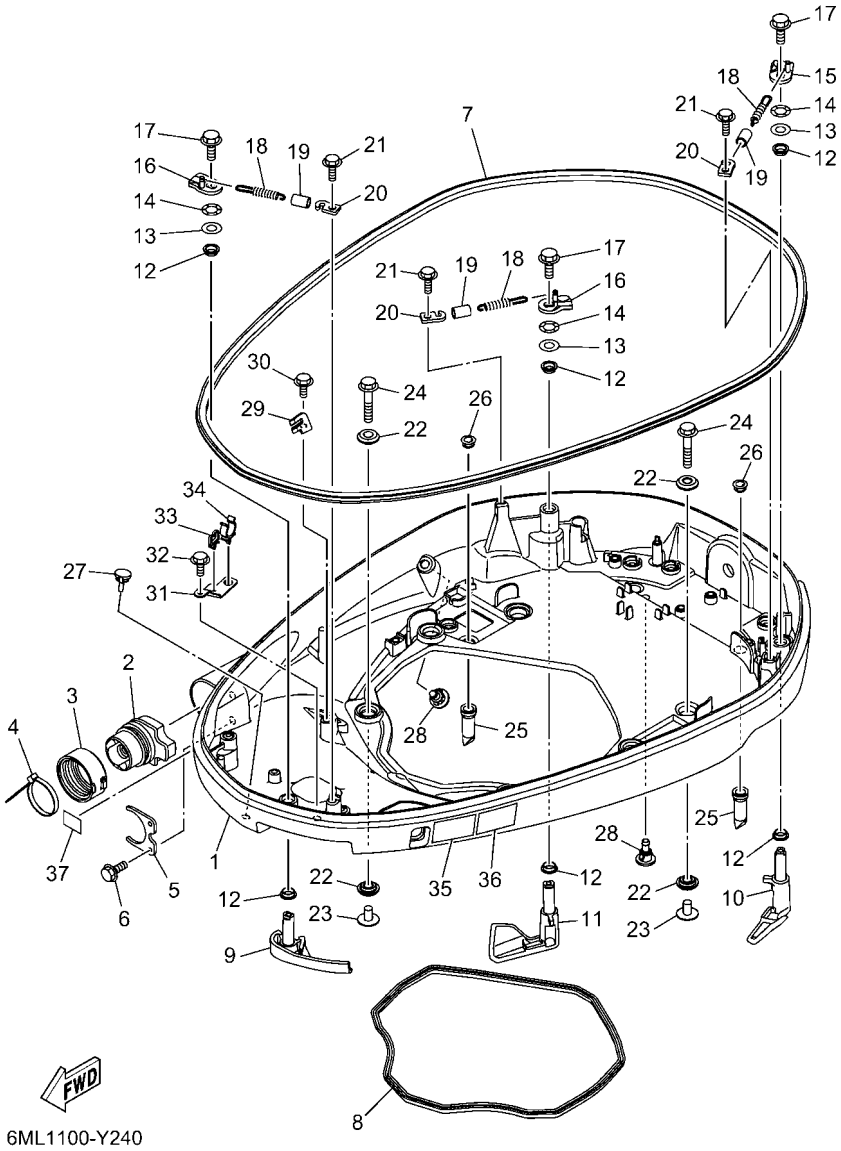

FIG. 24 BOTTOM COWLING 1 — CAPOT INFERIEUR 1

REF. NO.	PART NO. N° PIECES	DESCRIPTION DESCRIPTION	SA	NSA	NSA2	6MM1		REMARKS REMARQUES
24	90119–08187	BOLT, WITH WASHER BOULON, AVEC RONDELLE	6	6	6	6		
25	6DA–42717–01	RUBBER, SEAL 2 JOINT EN CAOUTCHOUC 2	4	4	4	4		
26	6DA–42384–00	SEAL, CAP JOINT, CAPUCHON	4	4	4	4		
27	6H4–42748–01	GROMMET PASSE-FIL	1	1	1	1		
28	6P2–44391–00	NIPPLE, HOSE RACCORD D'ESSENCE	2	2	2	2		
29	6ML–42766–00	BRACKET 2 SUPPORT 2	1	1	1	1		
30	95D95–06012	BOLT, FLANGE DEEP RECESS BOULON FIXATION	1	1	1	1		
31	6ML–42756–00	STAY, CLAMP SUPPORT, COLLIER	1	1	1	1		
32	95D95–06012	BOLT, FLANGE DEEP RECESS BOULON FIXATION	1	1	1	1		
33	90464–08004	CLAMP BRIDE	1	1	1	1		
34	90464–19M45	CLAMP BRIDE	1	1	1	1		
35	6EE–42794–40	LABEL, WARNING (GENERAL) ETIQUETTE, AVERTISSEMENT	1	1	1	1		
36	6EE–42794–50	LABEL, WARNING (GENERAL) ETIQUETTE, AVERTISSEMENT	1	1	1	1		
37	6AH–81996–00	MARK MARQUE	1	1	1	1		

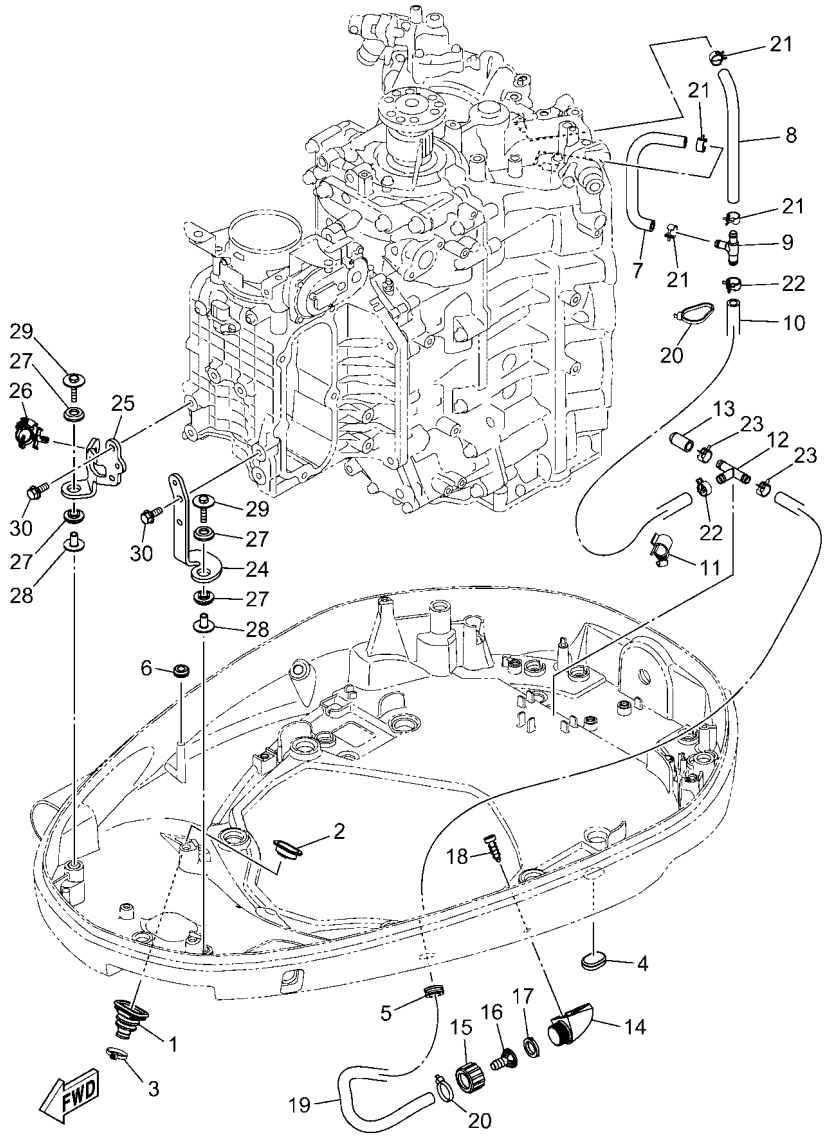

6ML1100-Y250

FIG. 25 BOTTOM COWLING 2 — CAPOT INFERIEUR 2

REF. NO.	PART NO. N° PIECES	DESCRIPTION DESCRIPTION	SA	NSA	NSA2	6MM1		REMARKS REMARQUES
1	6BG–42724–01	GROMMET PASSE-FIL	1	1	1	1		
2	6BG–42384–00	SEAL, CAP JOINT, CAPUCHON	1	1	1	1		
3	90465–11M10	CLAMP BRIDE	1	1	1	1		
4	64G–42727–01	GROMMET PASSE-FIL	1	1	1	1		
5	90480–19031	GROMMET PASSE-FIL	1	1	1	1		
6	90480–13163	GROMMET PASSE-FIL	1	1	1	1		
7	6CB–24315–00	PIPE 5 DURITE 5	1	1	1	1		
8	90445–14021	HOSE (L185) DURITE (L185)	1	1	1	1		
9	6AW–42169–00	JOINT AXE	1	1	1	1		
10	6KA–13582–00	PIPE DURITE	1	1	1	1		
11	90464–16017	CLAMP BRIDE	1	1	1	1		
12	90413–10001	WAY 3 RAINURE 3	1	1	1	1		
13	6KA–13587–00	CAP, JOINT JOINT DE COUVERCLE	1	1	1	1		
14	6AW–12572–00	ADAPTER ADAPTATEUR	1	1	1	1		
15	6R3–12581–00	JOINT, HOSE 1 JOINT DE TUYAU	1	1	1	1		
16	6AW–12582–00	JOINT, HOSE 2 RACCORD DE TUYAU 1	1	1	1	1		
17	6R3–12583–00	GASKET, HOSE JOINT JOINT	1	1	1	1		
18	97780–60520	SCREW, TAPPING VIS, TETE BOMBEE	2	2	2	2		
19	6KA–42541–00	PIPE 1 TUYAU 1	1	1	1	1		
20	90465–11M10	CLAMP BRIDE	2	2	2	2		
21	90467–130A5	CLIP JONC	4	4	4	4		
22	90467–140A8	CLIP JONC	2	2	2	2		
23	90467–140A9	CLIP JONC	2	2	2	2		
24	6ML–42643–00	PLATE, CLAMP PLAQUE, PRESSE	1	1	1	1		
25	6ML–42644–00	PLATE, CLAMP 2 PLAQUE, PRESSE 2	1	1	1	1		
26	90464–18011	CLAMP BRIDE	1	1	1	1		
27	90480–14029	GROMMET PASSE-FIL	4	4	4	4		

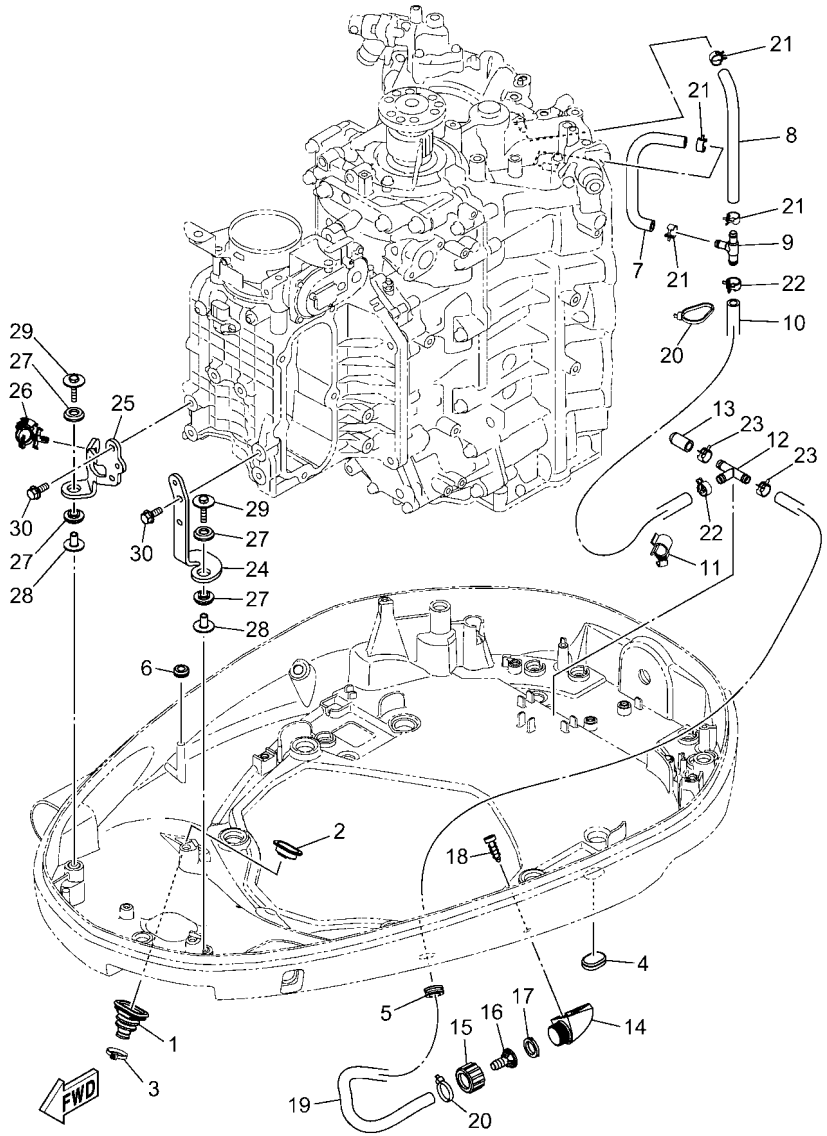

6ML1100-Y250

FIG. 25 BOTTOM COWLING 2 — CAPOT INFERIEUR 2

REF. NO.	PART NO. N° PIECES	DESCRIPTION DESCRIPTION	SA	NSA	NSA2	6MM1		REMARKS REMARQUES
28	90387–06M03	COLLAR COLLERETTE	2	2	2	2		
29	90119–06291	BOLT, WITH WASHER BOULON, AVEC RONDELLE	2	2	2	2		
30	90105–06039	BOLT, FLANGE BOULON, A COLLERETTE	4	4	4	4		

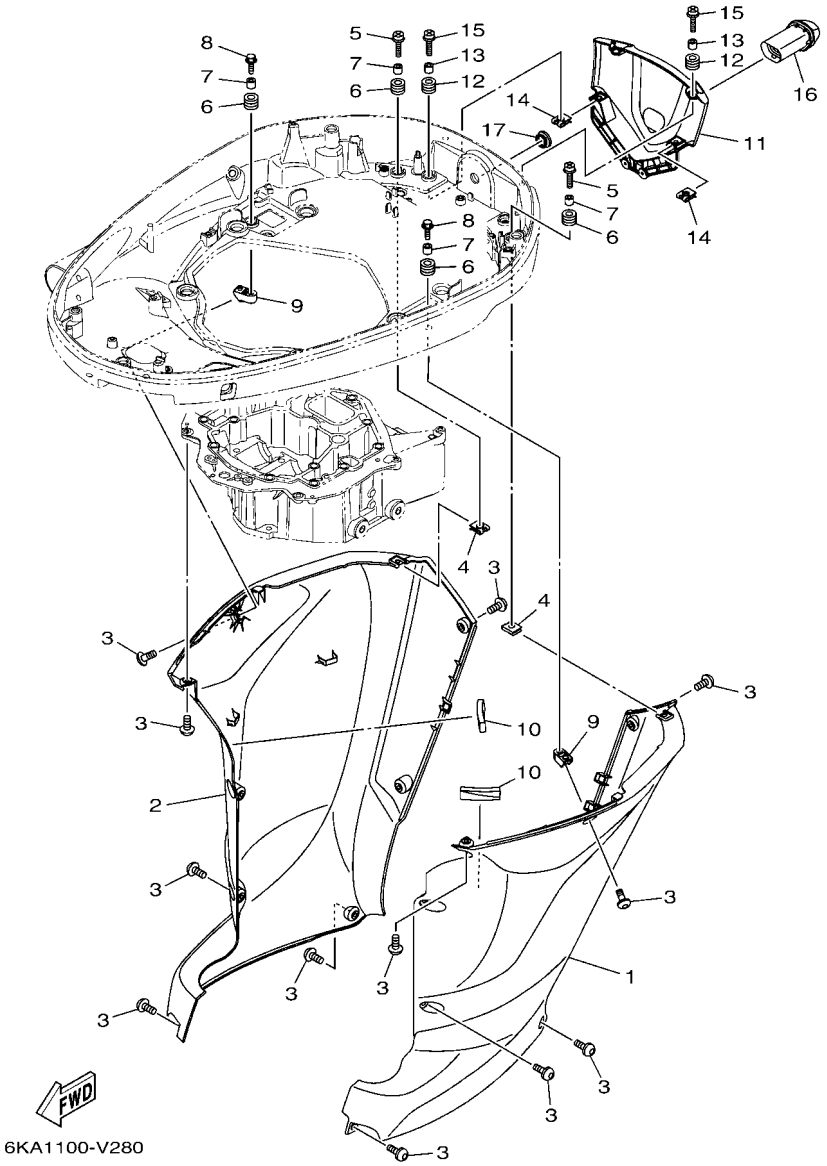

FIG. 26 BOTTOM COWLING 3 — CAPOT INFERIEUR 3

REF. NO.	PART NO. N° PIECES	DESCRIPTION DESCRIPTION	SA	NSA	NSA2	6MM1		REMARKS REMARQUES
1	6KA–42740–00–8D	APRON COMPLETE 1 CAPOT LATERAL COMPLETE 1		1				GRAY GRAY
	6KA–42740–00–CE	APRON COMPLETE 1 CAPOT LATERAL COMPLETE 1	1		1	1		WHITE WHITE
2	6KA–42770–00–8D	APRON COMPLETE 2 CAPOT LATERAL COMPLETE 2		1				GRAY GRAY
	6KA–42770–00–CE	APRON COMPLETE 2 CAPOT LATERAL COMPLETE 2	1		1	1		WHITE WHITE
3	90111–06144	BOLT, HEXAGON SOCKET BUTTON BOULON	16	16	16	16		
4	90183–061A8	NUT, SPRING ECROU, RESSORT	2	2	2	2		
5	90159–06053	SCREW, WITH WASHER VIS, AVEC RONDELLE	2	2	2	2		
6	90480–13M24	GROMMET PASSE-FIL	4	4	4	4		
7	90387–06M43	COLLAR COLLERETTE	4	4	4	4		
8	90109–06M80	BOLT BOULON	2	2	2	2		
9	6CE–42774–A0	STAY, APRON 1 COUSSINET	2	2	2	2		
10	5GJ–21717–00	DAMPER AMORTISSEUR	2	2	2	2		
11	6KA–42723–00–8D	COVER, BOTTOM COUVERCLE		1				GRAY GRAY
	6KA–42723–00–CE	COVER, BOTTOM COUVERCLE	1		1	1		WHITE WHITE
12	90480–13M24	GROMMET PASSE-FIL	4	4	4	4		
13	90387–06M43	COLLAR COLLERETTE	4	4	4	4		
14	90183–061A8	NUT, SPRING ECROU, RESSORT	2	2	2	2		
15	90159–06053	SCREW, WITH WASHER VIS, AVEC RONDELLE	4	4	4	4		
16	6KA–42769–00	SEAL, RUBBER BOURRELET, CAOUTCHOUC	1	1	1	1		
17	676–42726–00	GROMMET PASSE-FIL	1	1	1	1		

FIG. 27 BOTTOM COWLING 4 — CAPOT INFERIEUR 4

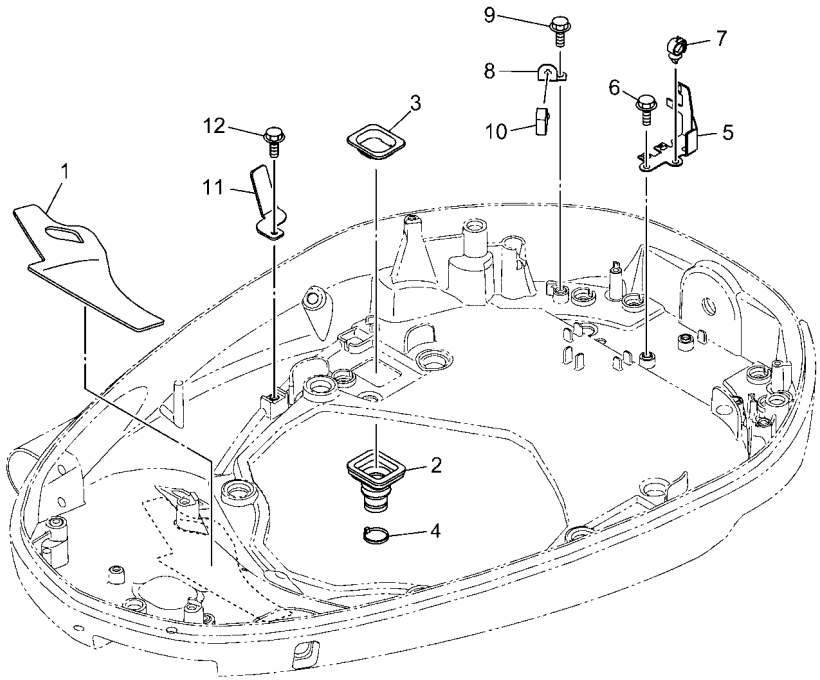

6ML1100-Y270

REF. NO.	PART NO. N° PIECES	DESCRIPTION DESCRIPTION	SA	NSA	NSA2	6MM1		REMARKS REMARQUES
1	6ML–42619–00	DAMPER, FORM BOURRELET, CAOUTCHOUC	1	1	1	1		
2	6GR–42724–01	GROMMET PASSE-FIL	1	1	1	1		
3	6GR–42384–00	SEAL, CAP JOINT, CAPUCHON	1	1	1	1		
4	90465–11M59	CLAMP BRIDE	1	1	1	1		
5	6KA–8257V–01	PLATE, CONNECTOR PLAQUE, CONNECTEUR	1	1	1	1		
6	95D95–06012	BOLT, FLANGE DEEP RECESS BOULON FIXATION	2	2	2	2		
7	90464–13249	CLAMP BRIDE	1	1	1	1		
8	63P–42756–00	STAY, CLAMP SUPPORT, COLLIER	1	1	1	1		
9	95D95–06012	BOLT, FLANGE DEEP RECESS BOULON FIXATION	1	1	1	1		
10	90464–20181	CLAMP BRIDE	1	1	1	1		
11	6KA–42811–00	STAY SUPPORT	1	1	1	1		
12	95D95–06012	BOLT, FLANGE DEEP RECESS BOULON FIXATION	1	1	1	1		

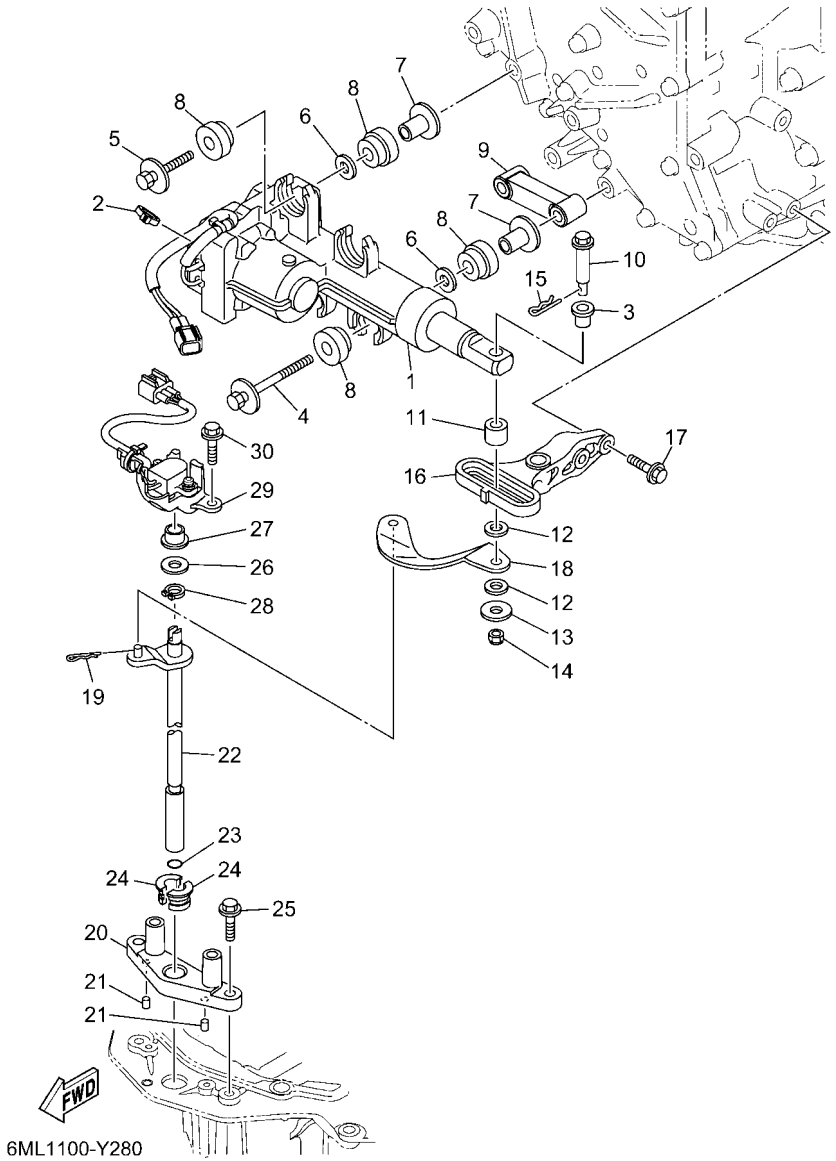

FIG. 28 CONTROL — COMMANDE

REF. NO.	PART NO. N° PIECES	DESCRIPTION DESCRIPTION	SA	NSA	NSA2	6MM1		REMARKS REMARQUES
1	6ML–4820A–00	ACTUATOR UNIT ACTUATOR UNIT	1	1	1	1		
2	90465–11M10	CLAMP BRIDE	1	1	1	1		
3	90386–08008	BUSH DOUILLE	1	1	1	1		
4	90119–08168	BOLT, WITH WASHER BOULON, AVEC RONDELLE	2	2	2	2		
5	90119–08175	BOLT, WITH WASHER BOULON, AVEC RONDELLE	2	2	2	2		
6	90201–12064	WASHER, PLATE RONDELLE, PLATE	4	4	4	4		
7	90387–08104	COLLAR COLLERETTE	4	4	4	4		
8	6CE–85564–00	GROMMET RONDELLE CAOUTCHOUC	8	8	8	8		
9	6ML–44142–00	JOINT AXE	1	1	1	1		
10	6CE–42195–10	PIN, JOINT 1 GOUPILLE	1	1	1	1		
11	6CE–44122–20	BUSHING, SHIFT ROD LEVER DOUILLE, LEVIER D'EMBRAYAGE	1	1	1	1		
12	90202–08M41	WASHER, PLATE RONDELLE, PLATE	2	2	2	2		
13	90201–06068	WASHER, PLATE RONDELLE, PLATE	1	1	1	1		
14	90185–06M07	NUT, SELF-LOCKING ECROU,AUTO-BLOQUANT	1	1	1	1		
15	90468–18008	CLIP JONC	1	1	1	1		
16	6CE–44117–10	BRACKET SUPPORT	1	1	1	1		
17	97E75–06525	BOLT, HEXAGON W/W DEEP RECESS VIS HEXAGONAL AVC RONDELLE	2	2	2	2		
18	6CE–44121–10	LEVER, SHIFT ROD LEVIER, TIGE D'INVERSION	1	1	1	1		
19	90468–18008	CLIP JONC	1	1	1	1		
20	6CE–44118–A0	BRACKET SUPPORT	1	1	1	1		
21	93604–07M13	PIN, DOWEL CLAVETTE	2	2	2	2		
22	6KA–44120–00	HANDLE GEAR SHIFT ASSY LEVIER D'EMBRAYAGE	1	1	1	1		
23	93210–09165	O-RING JOINT TORIQUE	1	1	1	1		
24	90386–11001	BUSH DOUILLE	2	2	2	2		
25	95D75–06025	BOLT, FLANGE DEEP RECESS BOULON FIXATION	2	2	2	2		
26	90201–11008	WASHER, PLATE RONDELLE, PLATE	1	1	1	1		
27	90386–10001	BUSH DOUILLE	1	1	1	1		

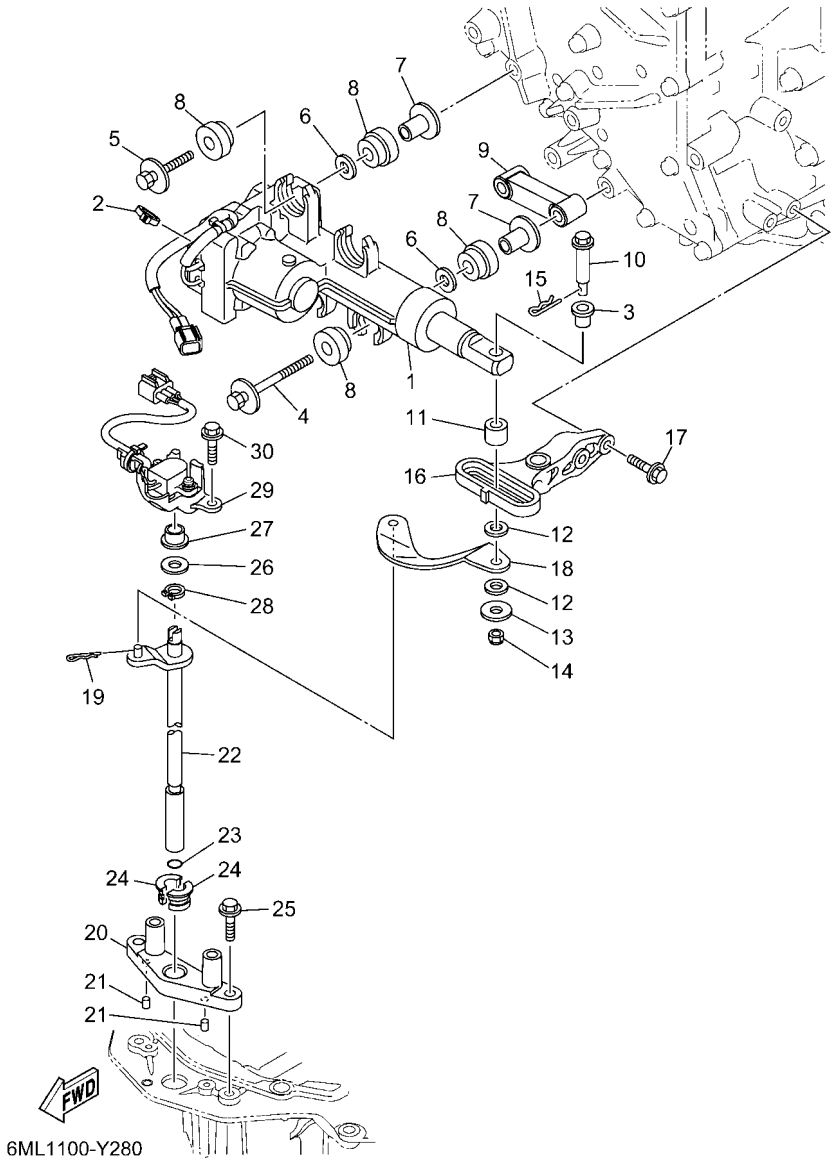

FIG. 28 CONTROL — COMMANDE

REF. NO.	PART NO. N° PIECES	DESCRIPTION DESCRIPTION	SA	NSA	NSA2	6MM1		REMARKS REMARQUES
28	93410–10082	CIRCLIP CIRCLIP	1	1	1	1		
29	6CE–68303–00	SENSOR ASSY SONDE (ENS.)	1	1	1	1		
30	95D75–06025	BOLT, FLANGE DEEP RECESS BOULON FIXATION	2	2	2	2		

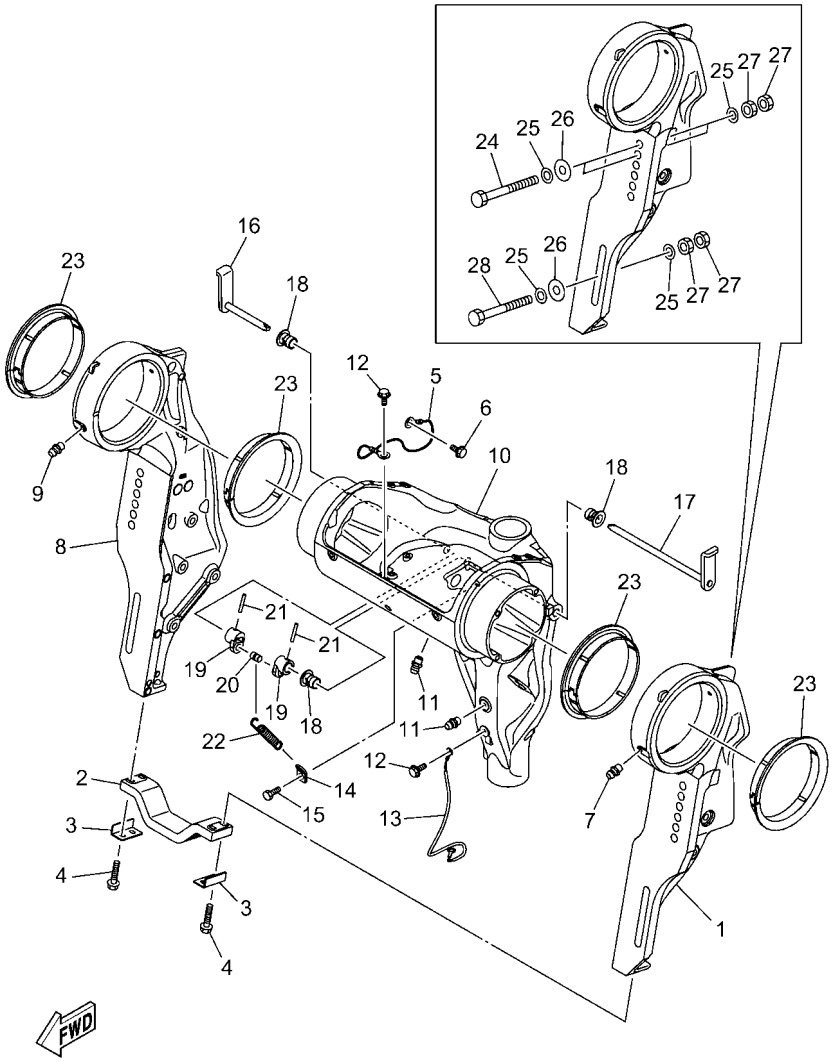

6ML1100-Y290

FIG. 29 BRACKET 1 SUPPORT 1

REF. NO.	PART NO. N° PIECES	DESCRIPTION DESCRIPTION	SA	NSA	NSA2	6MM1		REMARKS REMARQUES
1	6ML–43111–00–8D	BRACKET, CLAMP 1 PRESSE 1		1				GRAY GRAY
	6ML–43111–00–CE	BRACKET, CLAMP 1 PRESSE 1	1		1	1		WHITE WHITE
2	6G5–45251–02	ANODE ANODE	1	1	1	1		
3	6G5–44526–00	PLATE PLAQUE	2	2	2	2		
4	97E95–06525	BOLT, HEXAGON W/W DEEP RECESS VIS HEXAGONAL AVC RONDELLE	4	4	4	4		
5	6U0–82127–00	WIRE, LEAD 2 FIL 2	1	1	1	1		
6	97E95–06510	BOLT, HEXAGON W/W DEEP RECESS VIS HEXAGONAL AVC RONDELLE	1	1	1	1		
7	93700–06002	NIPPLE, GREASE PION	1	1	1	1		
8	6ML–43112–00–8D	BRACKET, CLAMP 2 PRESSE 2		1				GRAY GRAY
	6ML–43112–00–CE	BRACKET, CLAMP 2 PRESSE 2	1		1	1		WHITE WHITE
9	93700–06002	NIPPLE, GREASE PION	1	1	1	1		
10	6KA–43311–00–8D	BRACKET, SWIVEL 1 SUPPORT, PIVOT 1		1				GRAY GRAY
	6KA–43311–00–CE	BRACKET, SWIVEL 1 SUPPORT, PIVOT 1	1		1	1		WHITE WHITE
11	93700–06002	NIPPLE, GREASE PION	3	3	3	3		
12	97E95–06510	BOLT, HEXAGON W/W DEEP RECESS VIS HEXAGONAL AVC RONDELLE	2	2	2	2		
13	6KA–82147–00	WIRE, LEAD 5 FIL 5	1	1	1	1		
14	6G5–43144–00	HOOK, SPRING CROCHET	1	1	1	1		
15	97D95–06010	BOLT, HEXAGON DEEP RECESS VIS HEXAGONAL	1	1	1	1		
16	6KA–43181–00	LEVER, TILT STOP 1 LEVIER VERROUILLAGE RELEVAGE 1	1	1	1	1		
17	6KA–43185–00	LEVER, TILT STOP 2 LEVIER VERROUILLAGE RELEVAGE 2	1	1	1	1		
18	90386–10M16	BUSH DOUILLE	3	3	3	3		
19	6G5–43148–00	COLLAR, DISTANCE ENTRETOISE	2	2	2	2		
20	90249–06M19	PIN GOUPILLE	1	1	1	1		
21	91690–30020	PIN, SPRING AGRAFFE	2	2	2	2		
22	90506–16010	SPRING, TENSION RESSORT, TENSION	1	1	1	1		
23	6GR–43333–00	BUSH. , SWIVEL BRACKET BUISSON. , SUPPORT PIVOTANT	4	4	4	4		
24	90101–12067	BOLT (150MM) BOULON (150MM)	4	4	4	4		

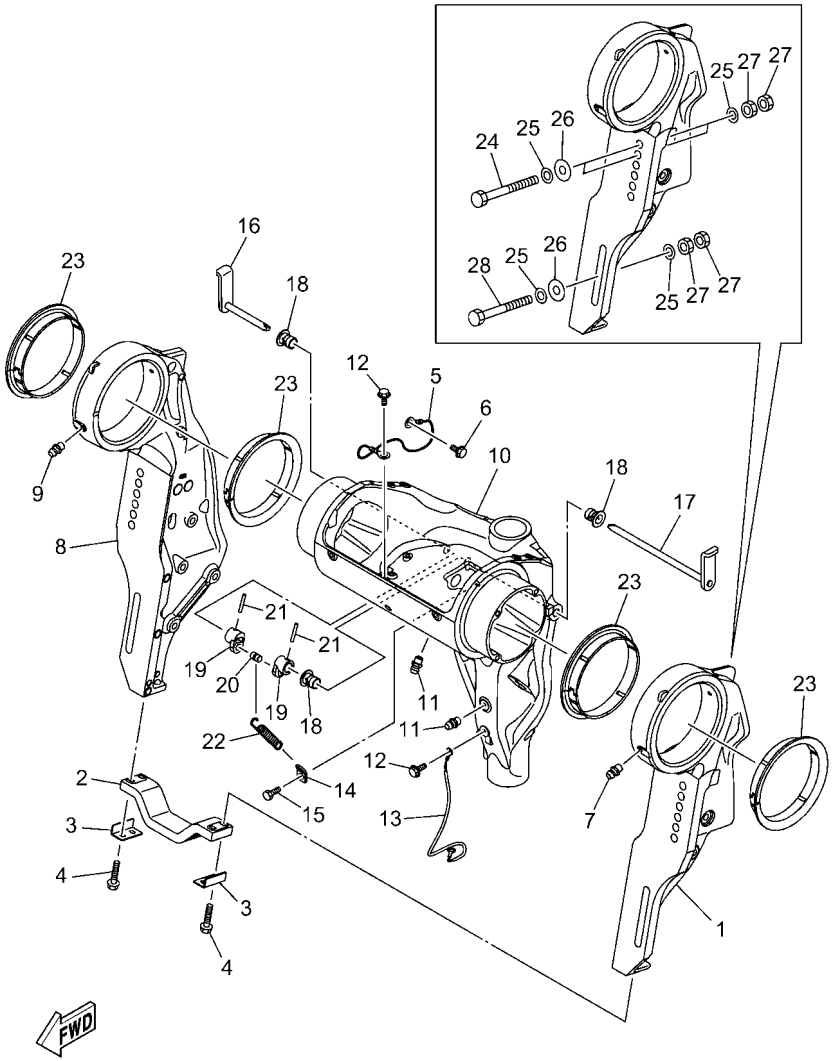

6ML1100-Y290

FIG. 29 BRACKET 1 — SUPPORT 1

REF. NO.	PART NO. N° PIECES	DESCRIPTION DESCRIPTION	SA	NSA	NSA2	6MM1		REMARKS REMARQUES
25	90201–13M01	WASHER, PLATE RONDELLE, PLATE	12	12	12	12		
26	90201–12426	WASHER, PLATE RONDELLE, PLATE	6	6	6	6		
27	95380–12600	NUT ECROU	12	12	12	12		
28	90101–12076	BOLT (130MM) BOULON (130MM)	2	2	2	2		
	90101–12071	BOLT (85MM) BOULON (85MM)	2	2	2	2		AP AP
	90101–12072	BOLT (110MM) BOULON (110MM)	2	2	2	2		AP AP
	90101–12076	BOLT (130MM) BOULON (130MM)	2	2	2	2		AP AP
	90101–12067	BOLT (150MM) BOULON (150MM)	2	2	2	2		AP AP
	90101–12077	BOLT (160MM) BOULON (160MM)	2	2	2	2		AP AP
	90101–12068	BOLT (170MM) BOULON (170MM)	2	2	2	2		AP AP
	90101–12073	BOLT (180MM) BOULON (180MM)	2	2	2	2		AP AP
	90101–12074	BOLT (200MM) BOULON (200MM)	2	2	2	2		AP AP

FIG. 30 BRACKET 2 SUPPORT 2

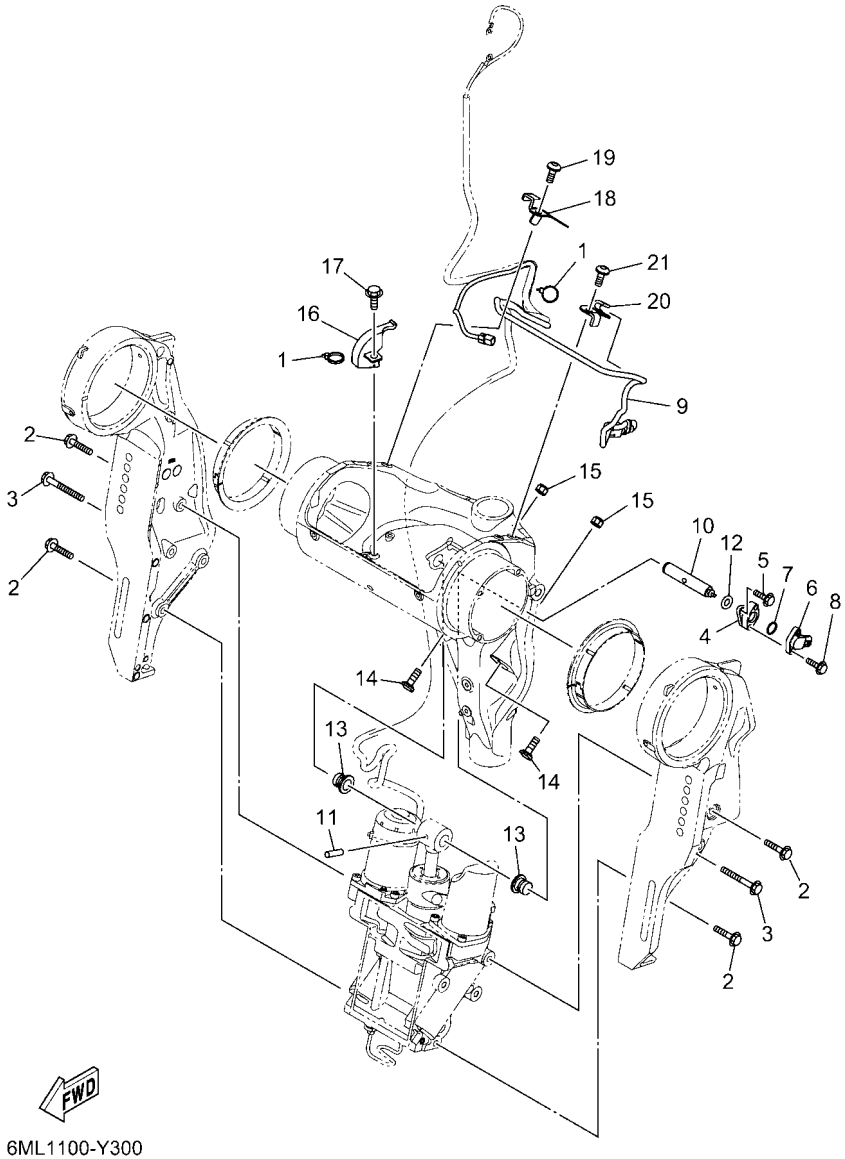

6ML1100-Y300

REF. NO.	PART NO. N° PIECES	DESCRIPTION DESCRIPTION	SA	NSA	NSA2	6MM1		REMARKS REMARQUES
1	90465–11M10	CLAMP BRIDE	2	2	2	2		
2	90119–10024	BOLT, WITH WASHER BOULON, AVEC RONDELLE	6	6	6	6		
3	90119–10064	BOLT, WITH WASHER BOULON, AVEC RONDELLE	2	2	2	2		
4	6KA–4382A–00	ADAPTOR 1 ADAPTEUR 1	1	1	1	1		
5	97595–05516	BOLT, WITH WASHER VIS HEXAGONAL AVC RONDELLE	2	2	2	2		
6	6GR–85887–00	SENSOR ANGLE CAPTEUR DE COUPLE	1	1	1	1		
7	93210–17MF9	O-RING JOINT TORIQUE	1	1	1	1		
8	97595–05516	BOLT, WITH WASHER VIS HEXAGONAL AVC RONDELLE	2	2	2	2		
9	6KA–82553–00	EXTENSION, WIRE LEAD EXTENSION, FAISCEAU	1	1	1	1		
10	6KA–43126–00	PIN, UPPER SHOCK MOUNT AXE, SUPERIEUR AMORTISSEUR	1	1	1	1		
11	91690–60022	PIN, SPRING AGRAFFE	1	1	1	1		
12	93210–06ME6	O-RING JOINT TORIQUE	1	1	1	1		
13	90386–18M14	BUSH DOUILLE	2	2	2	2		
14	6AW–43376–00	BOLT, THRUST RECEIVER BOULON	2	2	2	2		
15	95780–10300	NUT, FLANGE ECROU	2	2	2	2		
16	6KA–47651–00	PROTECTOR PROTECTEUR	1	1	1	1		
17	95D95–06012	BOLT, FLANGE DEEP RECESS BOULON FIXATION	1	1	1	1		
18	6KA–4381E–00	BRACKET, 1 SUPPORT, 1	1	1	1	1		
19	90111–06144	BOLT, HEXAGON SOCKET BUTTON BOULON	1	1	1	1		
20	6KA–4381F–00	BRACKET, 2 SUPPORT, 2	1	1	1	1		
21	90111–06144	BOLT, HEXAGON SOCKET BUTTON BOULON	1	1	1	1		

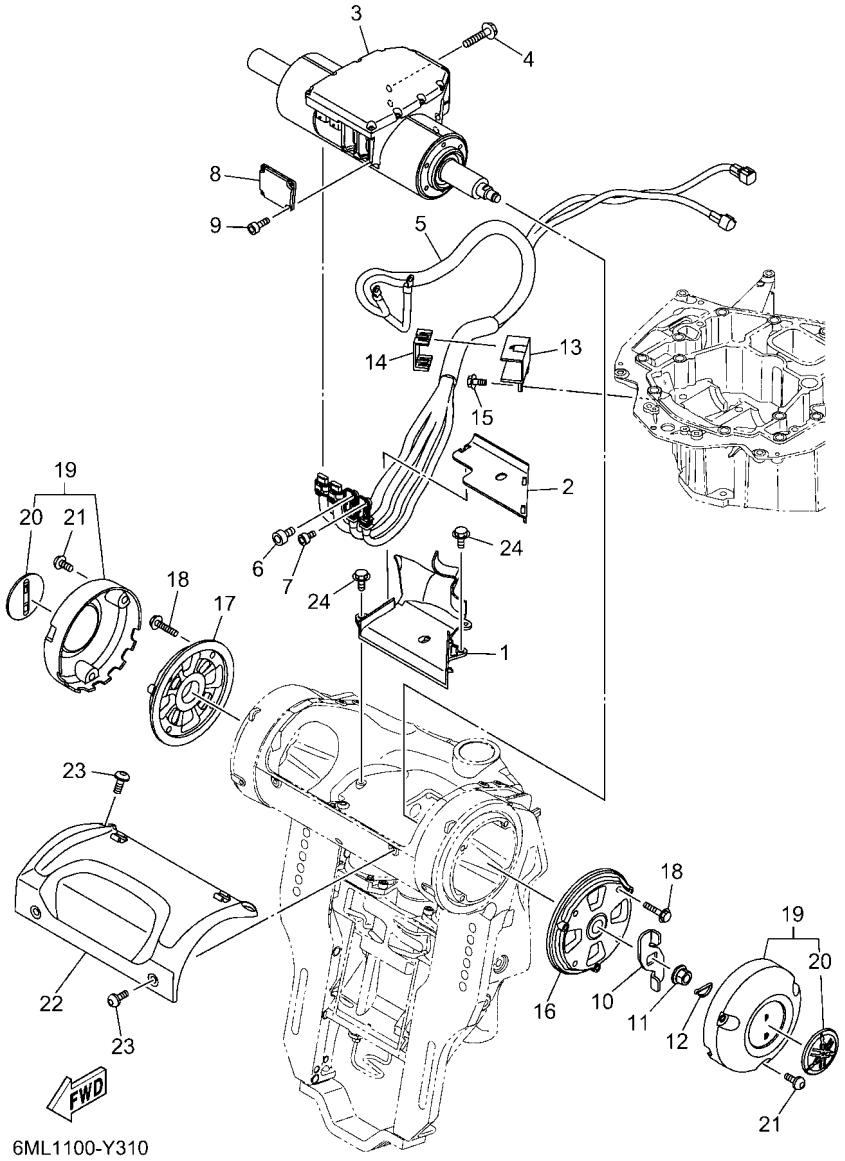

FIG. 31 BRACKET 3 SUPPORT 3

REF. NO.	PART NO. N° PIECES	DESCRIPTION DESCRIPTION	SA	NSA	NSA2	6MM1		REMARKS REMARQUES
1	6KA–87228–00	COVER HARNESS HARNAIS DE COUVERCLE	1	1	1	1		
2	6KA–8722G–00	COVER HARNESS 2 HARNAIS DE COUVERCLE 2	1	1	1	1		
3	6KA–42401–20	POWER STEERING CYLINDER ASSY CYLINDRE, DIRECTION ASSISTEE	1	1	1	1		
4	97580–08535	BOLT, WITH WASHER VIS HEXAGONAL AVC RONDELLE	4	4	4	4		
5	6KA–438A0–01	STEERING, WIRE HARNESS ASSY DIRECTION, FAISCEAU DE FILS CO	1	1	1	1		
6	6GR–44331–00	BOLT, 1 BOULON, 1	1	1	1	1		
7	6GR–44332–00	BOLT, 2 BOULON, 2	1	1	1	1		
8	6GR–42134–00	COVER CAPOT	1	1	1	1		
9	91380–04010	BOLT BOULON	4	4	4	4		
10	6GR–43378–10	WASHER RONDELLE	1	1	1	1		
11	90179–14009	NUT ECROU	1	1	1	1		
12	91490–20025	PIN. COTTER GOUPILLE	1	1	1	1		
13	6KA–43121–00	PROTECTOR PROTECTEUR	1	1	1	1		
14	6KA–47445–00	PROTECTOR PROTECTEUR	1	1	1	1		
15	95D95–06012	BOLT, FLANGE DEEP RECESS BOULON FIXATION	2	2	2	2		
16	6KA–43341–00	COVER, SWIVEL SODE 1 COUVERCLE, PIVOTANT COTE 1	1	1	1	1		
17	6KA–43342–00	COVER, SWIVEL SODE 2 COUVERCLE, PIVOTANT COTE 2	1	1	1	1		
18	90119–08176	BOLT, WITH WASHER BOULON, AVEC RONDELLE	8	8	8	8		
19	6GR–W436G–00–8D	SBW SIDE COVER ASSY SBW COUVERCLE LATERAL ASSEMBLE		2				GRAY GRAY
	6GR–W436G–00–CE	SBW SIDE COVER ASSY SBW COUVERCLE LATERAL ASSEMBLE	2		2	2		WHITE WHITE
20	6DA–42697–00	.TUNING FORK MARK .MARQUE, YAMAHA	1	1	1	1		
21	90111–06144	BOLT, HEXAGON SOCKET BUTTON BOULON	6	6	6	6		
22	6KA–43318–00–8D	COVER CAPUCHON		1				GRAY GRAY
	6KA–43318–00–CE	COVER CAPUCHON	1		1	1		WHITE WHITE
23	90111–06144	BOLT, HEXAGON SOCKET BUTTON BOULON	4	4	4	4		
24	95D95–06012	BOLT, FLANGE DEEP RECESS BOULON FIXATION	2	2	2	2		

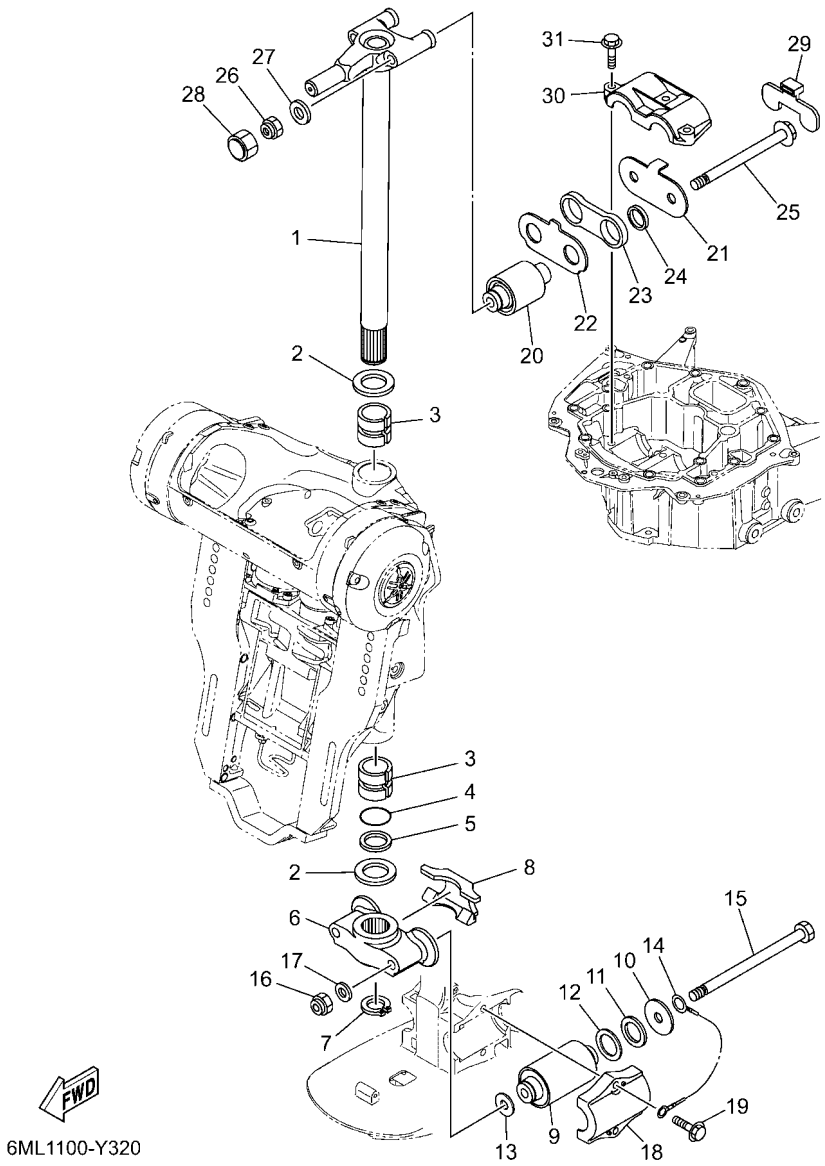

FIG. 32 BRACKET 4 SUPPORT 4

REF. NO.	PART NO. N° PIECES	DESCRIPTION DESCRIPTION	SA	NSA	NSA2	6MM1		REMARKS REMARQUES
1	6KA–42510–01–8D	STEERING BRACKET ASSY DIRECTION SUPPORT (ENS.)		1				GRAY GRAY
	6KA–42510–01–CE	STEERING BRACKET ASSY DIRECTION SUPPORT (ENS.)	1		1	1		WHITE WHITE
2	90201–40M00	WASHER, PLATE RONDELLE, PLATE	2	2	2	2		
3	90386–39M89	BUSH DOUILLE	2	2	2	2		
4	93210–35321	O-RING JOINT TORIQUE	1	1	1	1		
5	90202–40M47	WASHER, PLATE RONDELLE, PLATE	1	1	1	1		
6	6CE–44551–00–CA	HOUSING, LOWER MOUNT RUBBER 1 BOITIER, SILENT-BLOC INFERIEUR	1	1	1	1		
7	93410–37M04	CIRCLIP CIRCLIP	1	1	1	1		
8	6CE–44574–00	STOPPER, LOWER MOUNT RUBBER BUTEE	1	1	1	1		
9	6KA–44555–00	MOUNT DAMPER, LOWER SIDE SILENT-BLOC, INFERIEUR LATERAL	2	2	2	2		
10	90201–16032	WASHER, PLATE RONDELLE, PLATE	2	2	2	2		
11	90202–32M19	WASHER, PLATE RONDELLE, PLATE	2	2	2	2		
12	90201–35008	WASHER, PLATE RONDELLE, PLATE	2	2	2	2		
13	90201–15M58	WASHER, PLATE RONDELLE, PLATE	2	2	2	2		
14	6AW–82149–00	WIRE, LEAD 3 FIL 3	1	1	1	1		
15	90101–14004	BOLT BOULON	2	2	2	2		
16	90185–14M00	NUT, SELF-LOCKING ECROU,AUTO-BLOQUANT	2	2	2	2		
17	92995–14600	WASHER RONDELLE	2	2	2	2		
18	6AW–44552–00–CA	HOUSING, LOWER MOUNT RUBBER 2 BOITIER, SILENT-BLOC INFERIEUR	2	2	2	2		
19	90119–10024	BOLT, WITH WASHER BOULON, AVEC RONDELLE	4	4	4	4		
20	6CE–44514–00	MOUNT DAMPER, UPPER SIDE SILENT-BLOC, SUPERIEUR LATERAL	2	2	2	2		
21	6CE–44526–00	PLATE PLAQUE	1	1	1	1		
22	6CE–44536–00	PLATE 2 PLAQUETTE 2	1	1	1	1		
23	6CE–44532–01	STOPPER, UPPER MOUNT PLAQUETTE	1	1	1	1		
24	90387–28013	COLLAR COLLERETTE	2	2	2	2		
25	90105–14005	BOLT, FLANGE BOULON, A COLLERETTE	2	2	2	2		
26	90185–14M00	NUT, SELF-LOCKING ECROU,AUTO-BLOQUANT	2	2	2	2		

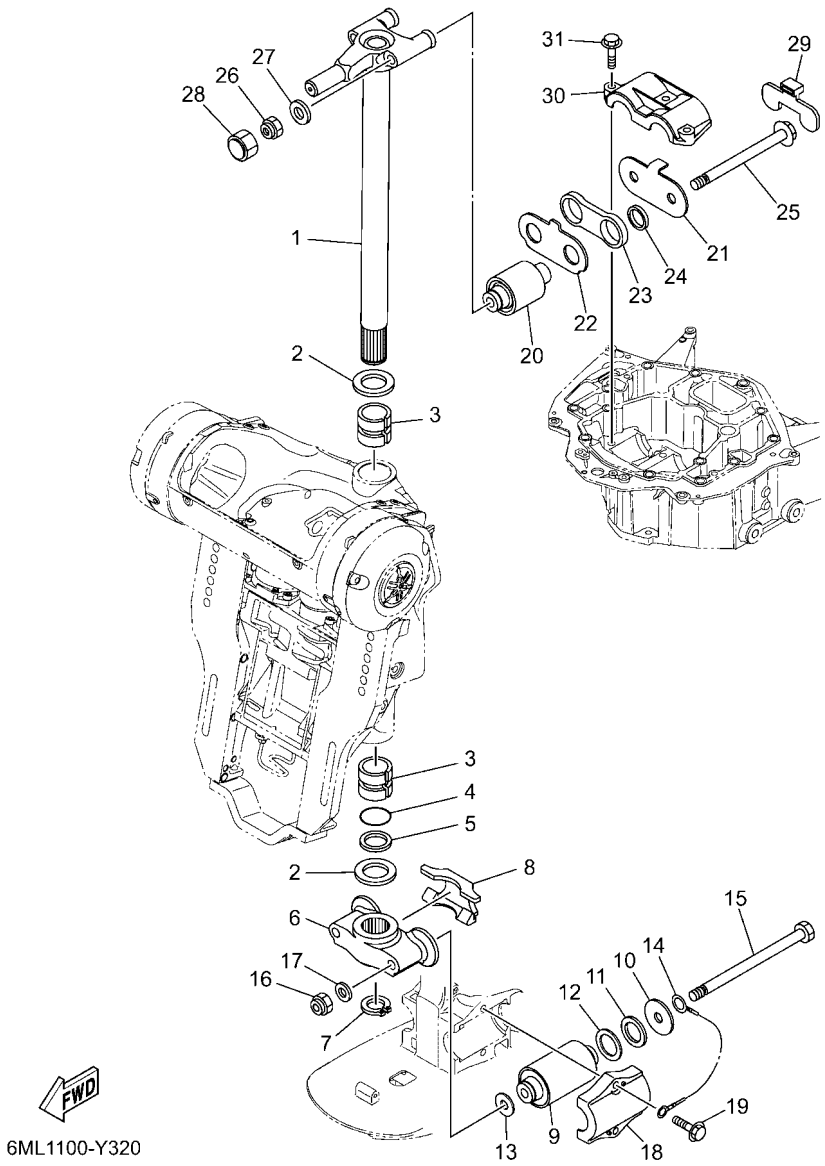

FIG. 32 BRACKET 4 — SUPPORT 4

REF. NO.	PART NO. N° PIECES	DESCRIPTION DESCRIPTION	SA	NSA	NSA2	6MM1		REMARKS REMARQUES
27	92995–14600	WASHER RONDELLE	2	2	2	2		
28	6CE–44194–01	CAP CAPUCHON	2	2	2	2		
29	6CE–44533–00	DAMPER, UPPER MOUNT RUBBER COUVERCLE, SUSPENSION INFERIEU	1	1	1	1		
30	6CE–44511–00	COVER, UPPER MOUNT COUVERCLE, SUSPENSION SUPERIEU	1	1	1	1		
31	90119–10024	BOLT, WITH WASHER BOULON, AVEC RONDELLE	3	3	3	3		

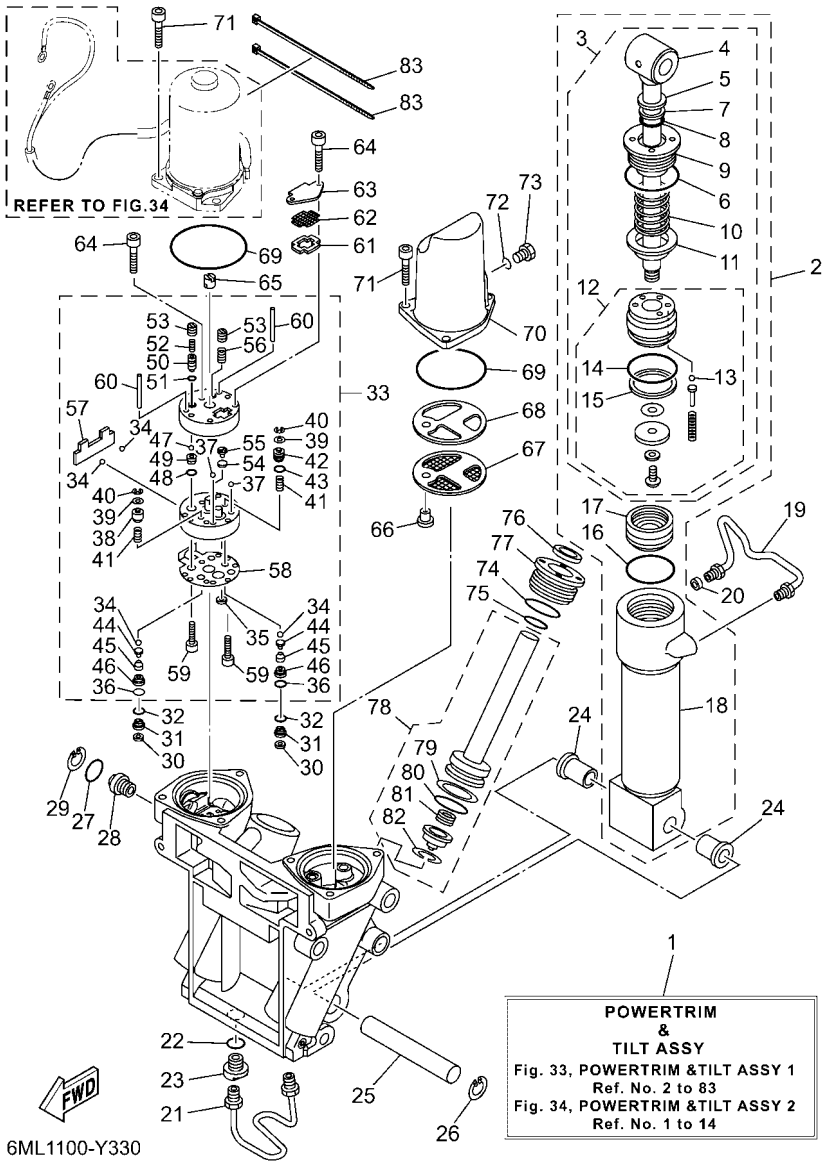

FIG. 33 POWER TRIM & TILT ASSY 1 — PUISSANCE PARER ET INCLINER 1

REF. NO.	PART NO. N° PIECES	DESCRIPTION DESCRIPTION	SA	NSA	NSA2	6MM1		REMARKS REMARQUES
1	6ML–W4380–00–8D	POWER TRIM & TILT ASSY PUISSANCE PARER ET INCLINER (E		1				GRAY GRAY
	6ML–W4380–00–CE	POWER TRIM & TILT ASSY PUISSANCE PARER ET INCLINER (E	1		1	1		WHITE WHITE
2	6KA–43840–00	POWER TILT ASSY PUISSANCE INCLINER (ENS.)	1	1	1	1		
3	6KA–43810–00	.TILT PISTON SUB ASSY .INCLINER PISTON AUXILIAIRE(ENS	1	1	1	1		
4	6KA–43801–00	..ROD ..TIGE	1	1	1	1		
5	93106–19001	..OIL SEAL ..JOINT SPY	1	1	1	1		
6	63P–43861–20	..O-RING ..JOINT TORIQUE	1	1	1	1		
7	6H1–43872–00	..RING, BACK UP ..RESSORT	1	1	1	1		
8	61A–4389H–01	..O-RING ..JOINT TORIQUE	1	1	1	1		
9	61A–43811–00	..SCREW, CYLINDER END ..VIS, CYLINDRE RACCORD	1	1	1	1		
10	69J–4384H–00	..SPRING ..RESSORT	1	1	1	1		
11	69J–4382E–00	..ADAPTOR 2 ..ADAPTEUR 2	1	1	1	1		
12	6CE–4380P–00	..PISTON SUB ASSY ..PISTON AUXILIAIRE (ENS.)	1	1	1	1		
13	93505–32038	...BALL ...BILLE	5	5	5	5		
14	61A–43861–00	...O-RING ...JOINT TORIQUE	1	1	1	1		
15	61A–43871–00	...RING, BACK UP ...SEGMENT	1	1	1	1		
16	61A–43861–00	.O-RING .JOINT TORIQUE	1	1	1	1		
17	6H1–43814–11	.PISTON, FREE .PISTON	1	1	1	1		
18	61A–43813–02	.CYLINDER, TILT .CYLINDRE	1	1	1	1		
19	69J–43835–10	PIPE TUYAU	1	1	1	1		
20	69J–4388J–00	PLUG 2 BOUCHON 2	1	1	1	1		
21	69J–43833–02	PIPE TUYAU	1	1	1	1		
22	93210–17239	O-RING JOINT TORIQUE	1	1	1	1		
23	69J–4388E–01	BOLT ,SCREW VIS	1	1	1	1		
24	90386–18M14	BUSH DOUILLE	2	2	2	2		
25	6ML–43818–00	PIN, LOWER SHOCK MOUNT AXE, INFERIEUR AMORTISSEUR	1	1	1	1		
26	61A–43876–01	RING, SNAP RESSORT	1	1	1	1		

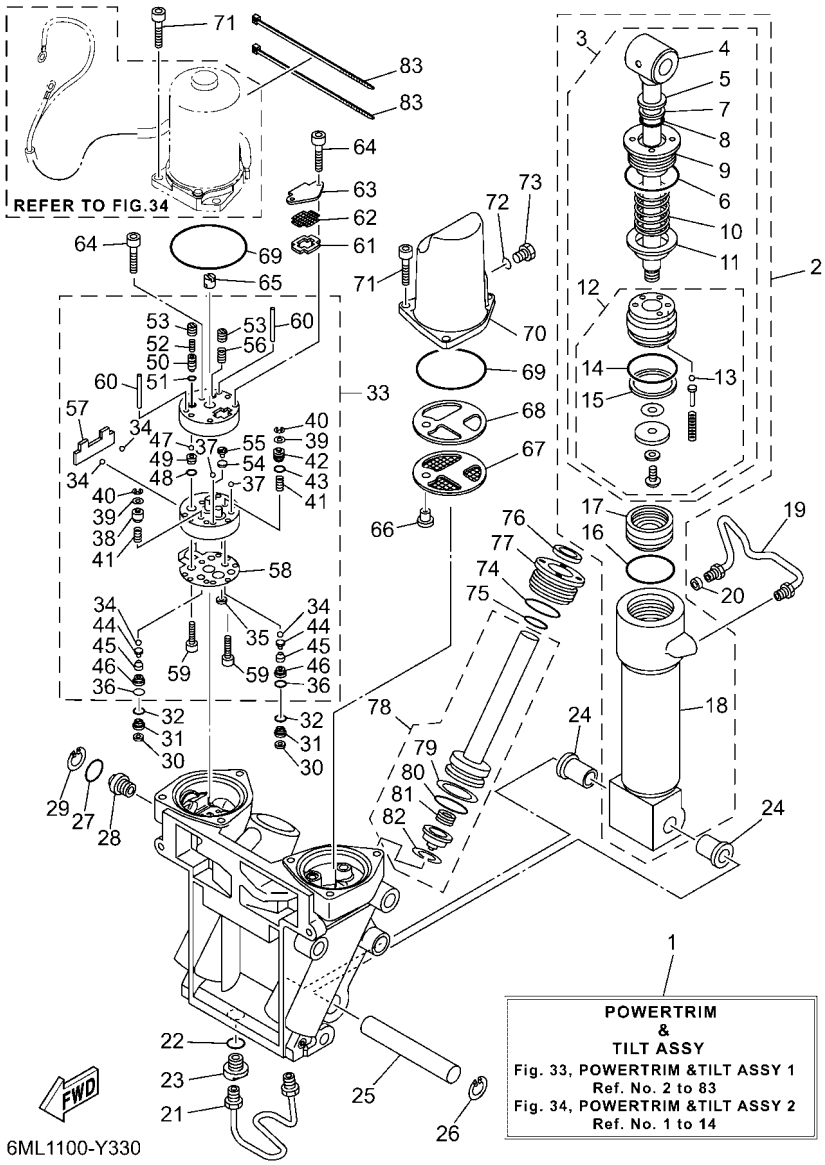

FIG. 33 POWER TRIM & TILT ASSY 1 — PUISSANCE PARER ET INCLINER 1

REF. NO.	PART NO. N° PIECES	DESCRIPTION DESCRIPTION	SA	NSA	NSA2	6MM1		REMARKS REMARQUES
27	6D8–43863–00	O-RING JOINT TORIQUE	1	1	1	1		
28	69J–43845–00	SCREW, MANUAL RELEASE VIS	1	1	1	1		
29	6H1–43875–00	RING, SNAP RESSORT	1	1	1	1		
30	69J–4381C–00	FILTER 3 FILTRE 3	2	2	2	2		
31	69J–43899–01	PLATE STOPPER PLAQUETTE	2	2	2	2		
32	69J–4389J–00	O-RING JOINT TORIQUE	2	2	2	2		
33	6ML–43830–00	GEAR PUMP ASSY POMPE A PIGNON (ENS.)	1	1	1	1		
34	93505–32038	.BALL .BILLE	4	4	4	4		
35	69J–4381C–00	.FILTER 3 .FILTRE 3	1	1	1	1		
36	69J–4389J–00	.O-RING .JOINT TORIQUE	2	2	2	2		
37	93503–16003	.BALL .BILLES	2	2	2	2		
38	6CJ–4384M–00	.PISTON, SHUTTLE 2 .PISTON 2	1	1	1	1		
39	69A–4384F–00	.SEAL, MAIN VALVE .JOINT	2	2	2	2		
40	99002–03600	.CIRCLIP .CIRCLIP	2	2	2	2		
41	69J–43894–00	.SPRING, SHUTTLE RETURN .RESSORT	2	2	2	2		
42	6CJ–43841–00	.PISTON, SHUTTLE .PISTON	1	1	1	1		
43	6H1–43883–00	.O-RING .JOINT TORIQUE	1	1	1	1		
44	60V–4386A–00	.PIN, ABSORBER VALVE .GOUPILLE, SOUPAPE	2	2	2	2		
45	69J–43853–00	.SPRING, MAIN VALVE .RESSORT	2	2	2	2		
46	6CJ–43893–00	.WASHER .RONDELLE	2	2	2	2		
47	93501–08001	.BALL .BILLE	2	2	2	2		
48	93210–08391	.O-RING .JOINT TORIQUE	1	1	1	1		
49	69J–43851–00	.SEAT, RELIEF VALVE .SIEGE	1	1	1	1		
50	63P–43844–20	.PIN, VALVE SUPPORT .GOUPILLE	1	1	1	1		
51	93210–064A5	.O-RING .JOINT TORIQUE	1	1	1	1		
52	69J–43855–00	.SPRING, UP RELIEF .RESSORT	1	1	1	1		
53	6CJ–43843–00	.SCREW, VALVE LOCK .VIS	2	2	2	2		

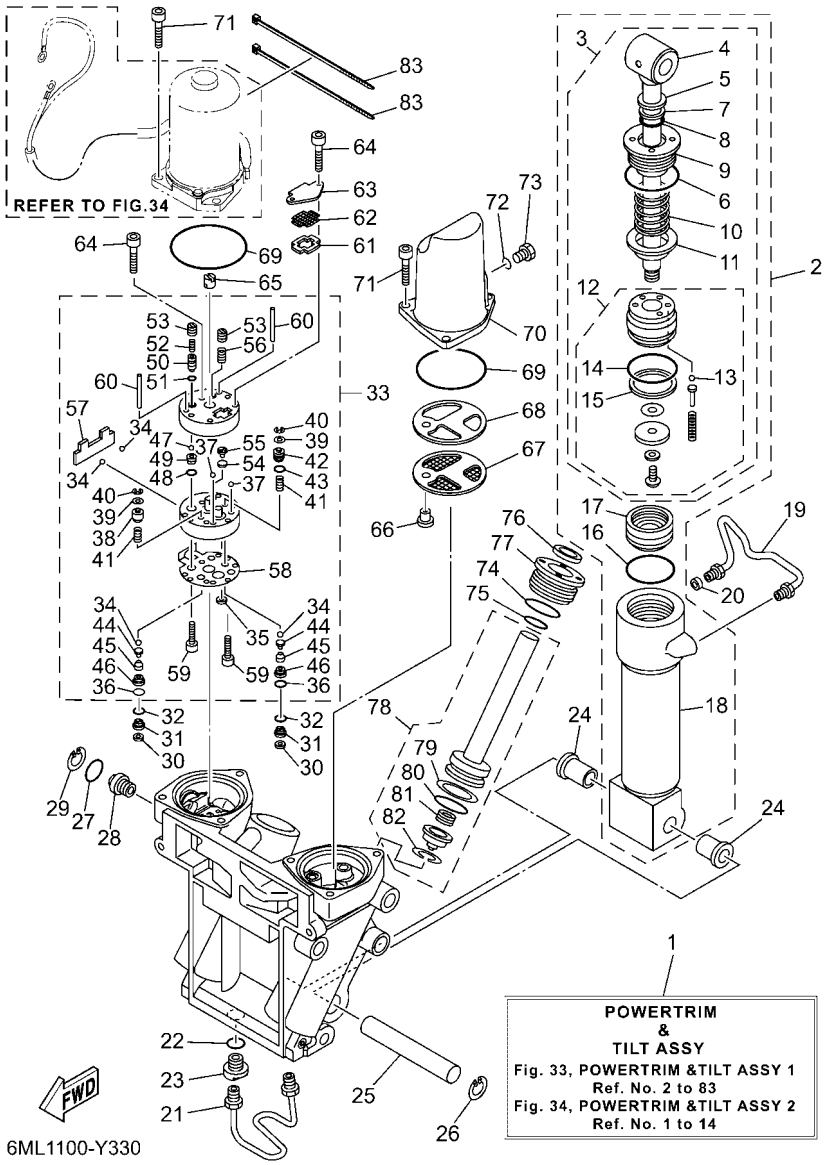

FIG. 33 POWER TRIM & TILT ASSY 1 — PUISSANCE PARER ET INCLINER 1

REF. NO.	PART NO. N° PIECES	DESCRIPTION DESCRIPTION	SA	NSA	NSA2	6MM1		REMARKS REMARQUES
54	6H1–4384G–11	.SEAL, RELIEF VALVE .JOINT	1	1	1	1		
55	6H1–43844–10	.PIN, VALVE SUPPORT .GOUPILLE	1	1	1	1		
56	6H1–43856–10	.SPRING, DOWN RELIEF .RESSORT	1	1	1	1		
57	69J–43854–00	.SPRING, MANUAL RELEASE .RESSORT	1	1	1	1		
58	69J–4384G–00	.SEAL, RELIEF VALVE .JOINT	1	1	1	1		
59	91318–05025	.BOLT .BOULON	2	2	2	2		
60	93604–35236	.PIN, DOWEL .CLAVETTE	2	2	2	2		
61	69J–43871–00	RING, BACK UP SEGMENT	1	1	1	1		
62	69J–43816–00	FILTER 1 FILTRE 1	1	1	1	1		
63	69J–4381J–00	PLATE PLAQUE	1	1	1	1		
64	91318–05040	BOLT BOULON	3	3	3	3		
65	69J–43831–00	CONNECTOR, SHAFT RACCORD	1	1	1	1		
66	69J–4388H–00	PLUG BOUCHON	1	1	1	1		
67	69J–43817–00	FILTER 2 FILTRE 2	1	1	1	1		
68	69J–4388F–00	SPACER ENTRETOISE	1	1	1	1		
69	93210–66001	O-RING JOINT TORIQUE	2	2	2	2		
70	6KA–43828–00	BODY, RESERVOIR CORPS	1	1	1	1		
71	69J–43888–00	BOLT, SOCKET BOULON	6	6	6	6		
72	93210–09165	O-RING JOINT TORIQUE	1	1	1	1		
73	6H1–43829–00	PLUG, RESERVOIR BOUCHON	1	1	1	1		
74	61A–43861–00	O-RING JOINT TORIQUE	2	2	2	2		
75	6D8–43863–00	O-RING JOINT TORIQUE	2	2	2	2		
76	63P–43812–20	SEAL, DUST JOINT	2	2	2	2		
77	6ML–43821–00	SCREW, TRIM CYLINDER END VIS	2	2	2	2		
78	69J–43820–01	TRIM PISTON SUB ASSY PARER PISTON AUXILIAIRE (ENS.)	2	2	2	2		
79	61A–43874–00	.RING, BACK UP .RESSORT	1	1	1	1		
80	61A–43864–00	.O-RING .JOINT TORIQUE	1	1	1	1		

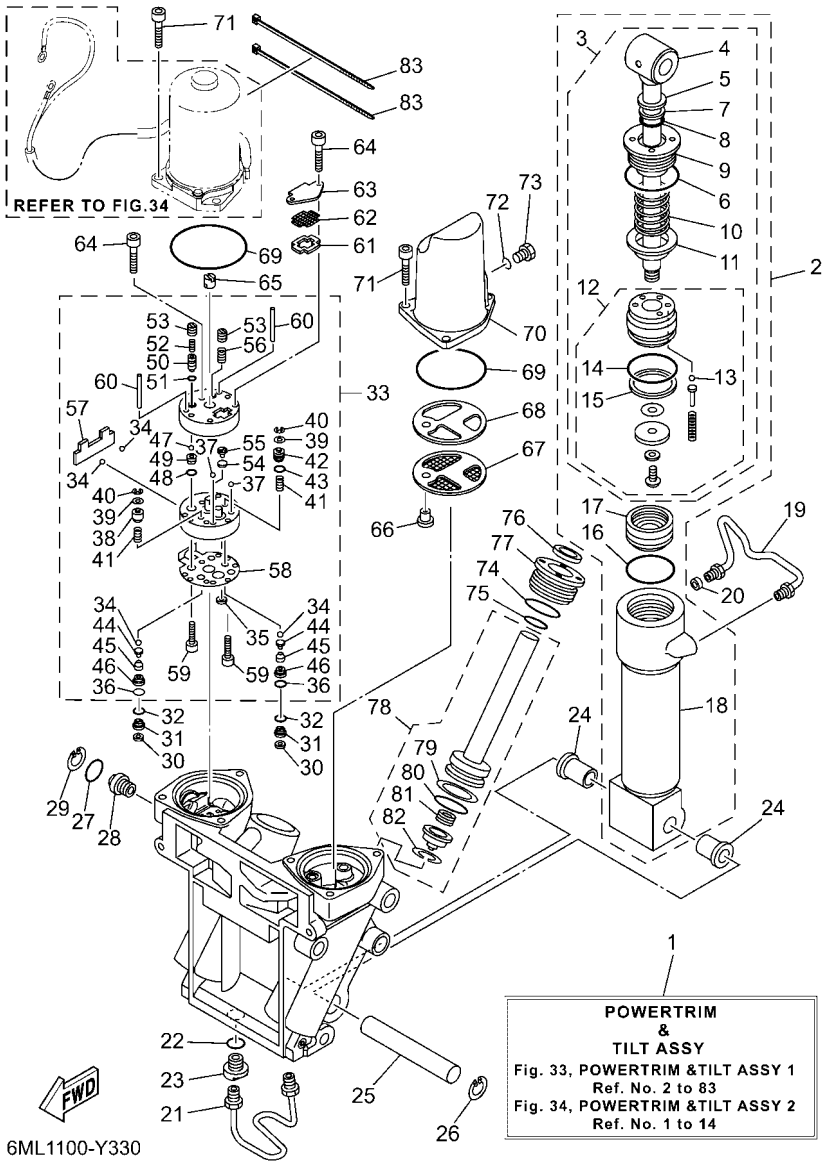

FIG. 33 POWER TRIM & TILT ASSY 1 — PUISSANCE PARER ET INCLINER 1

REF. NO.	PART NO. N° PIECES	DESCRIPTION DESCRIPTION	SA	NSA	NSA2	6MM1		REMARKS REMARQUES
81	61A–4384H–10	.SPRING .RESSORT	1	1	1	1		
82	61A–43875–10	.RING, SNAP .RESSORT	1	1	1	1		
83	90464–99004	CLAMP BRIDE	2	2	2	2		

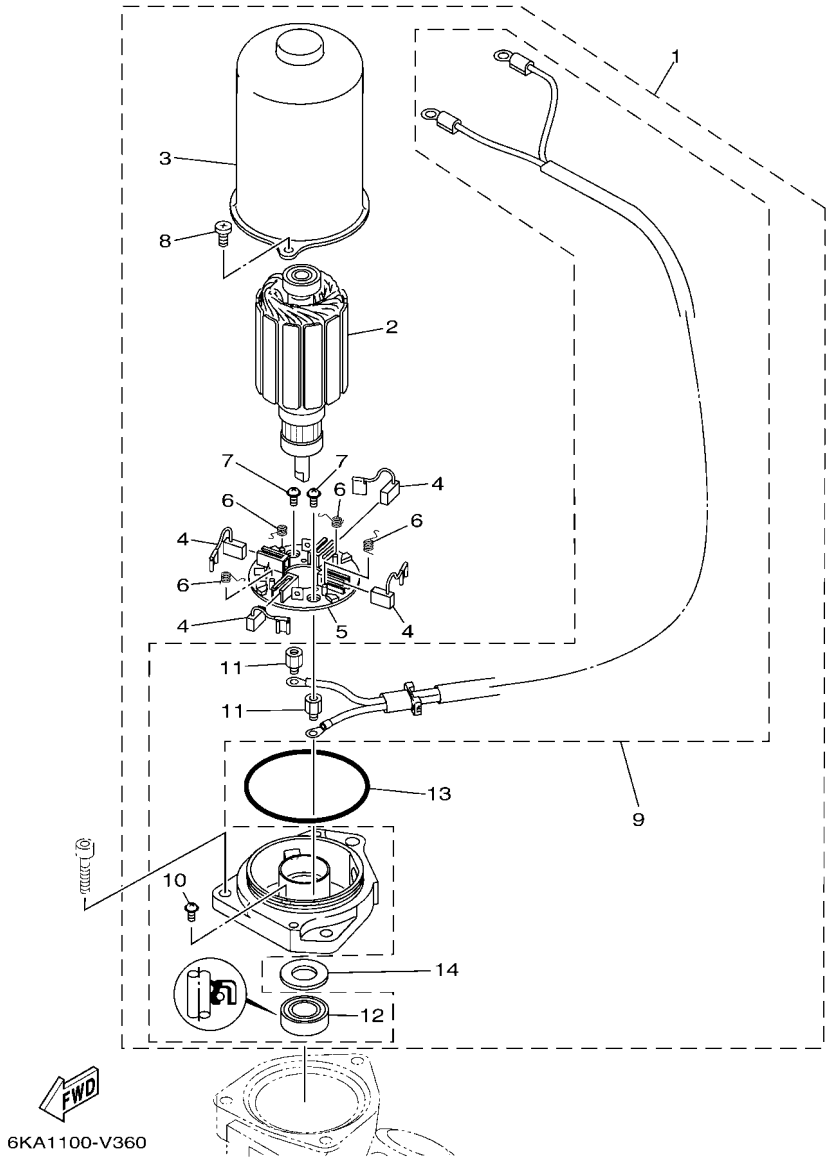

FIG. 34 POWER TRIM & TILT ASSY 2 — PUISSANCE PARER ET INCLINER 2

REF. NO.	PART NO. N° PIECES	DESCRIPTION DESCRIPTION	SA	NSA	NSA2	6MM1		REMARKS REMARQUES
1	6ML–43880–00	MOTOR ASSY MOTEUR (ENS.)	1	1	1	1		
2	6KA–43805–00	.ARMATURE ASSY .INDUIT (ENS.)	1	1	1	1		
3	6KA–43804–01	.STATOR ASSY .STATOR (ENS.)	1	1	1	1		
4	6KA–43892–00	.BRUSH 2 .BALAI 2	4	4	4	4		
5	6KA–43806–00	.BRUSH HOLDER ASSY .PORTE-BALAI (ENS.)	1	1	1	1		
6	6KA–4386K–00	.SPRING, BRUSH .RESSORT, BALAI	4	4	4	4		
7	97602–04306	.SCREW, PAN HEAD WITH WASHER .VIS, AVEC RONDELLE	2	2	2	2		
8	6KA–43879–00	.SCREW, WITH WASHER .VIS, AVEC RONDELLE	2	2	2	2		
9	6ML–43881–00	.FRAME, END .BATI	1	1	1	1		
10	97602–04308	..SCREW, PAN HEAD WITH WASHER ..VIS, AVEC RONDELLE	1	1	1	1		
11	6KA–4388F–00	..SPACER ..ENTRETOISE	2	2	2	2		
12	6KA–43882–00	..OIL SEAL ..JOINT SPI	1	1	1	1		
13	6KA–43862–00	.O-RING .JOINT TORIQUE	1	1	1	1		
14	6KA–4387G–00	.WASHER .RONDELLE	1	1	1	1		

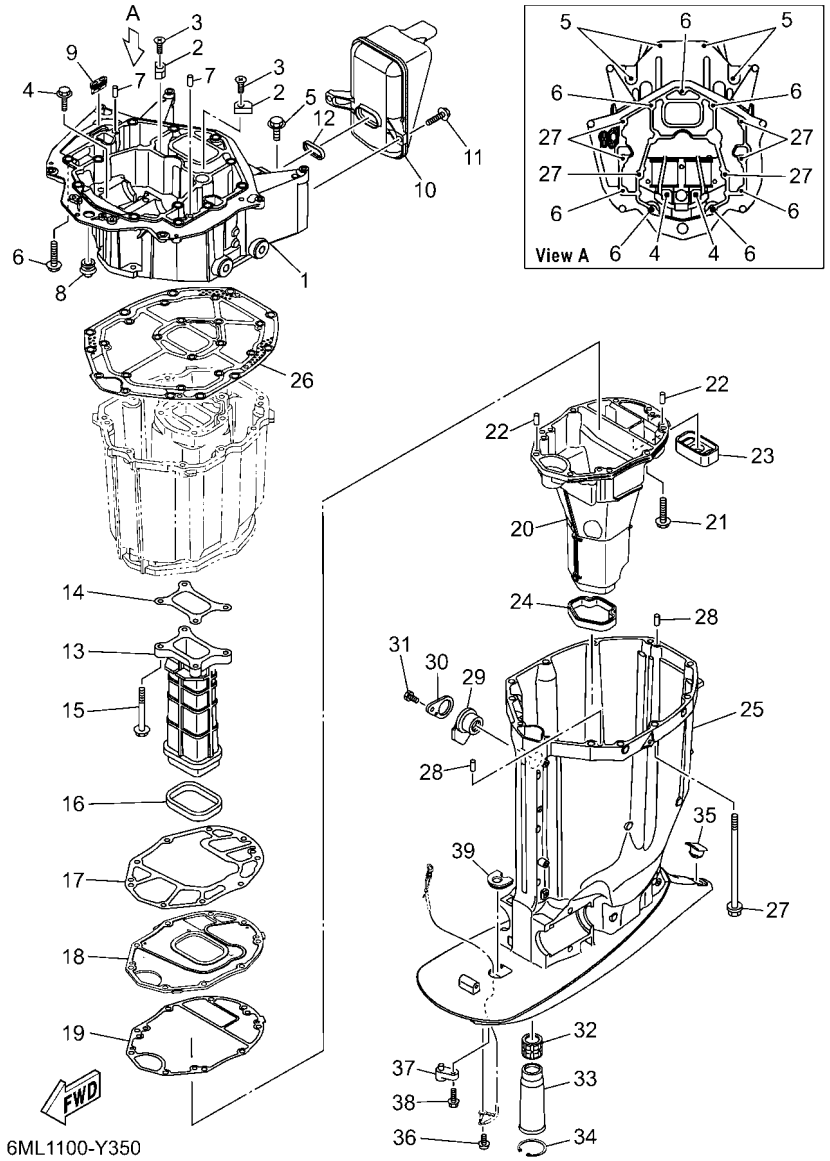

FIG. 35 UPPER CASING — FOURREAU

REF. NO.	PART NO. N° PIECES	DESCRIPTION DESCRIPTION	SA	NSA	NSA2	6MM1		REMARKS REMARQUES
1	6KA–41137–00	GUIDE, EXHAUST COLLECTEUR D'ECHAPPEMENT	1	1	1	1		
2	63P–11325–11	ANODE ANODE	2	2	2	2		
3	90151–06M02	SCREW, COUNTERSUNK VIS, TETE NOYEE	2	2	2	2		
4	90119–08182	BOLT, WITH WASHER BOULON, AVEC RONDELLE	2	2	2	2		
5	97E75–10545	BOLT, HEXAGON W/W DEEP RECESS VIS HEXAGONAL AVC RONDELLE	4	4	4	4		
6	97E75–10535	BOLT, HEXAGON W/W DEEP RECESS VIS HEXAGONAL AVC RONDELLE	7	7	7	7		
7	93608–16M16	PIN, DOWEL AXE	2	2	2	2		
8	6E5–42724–01	GROMMET PASSE-FIL	1	1	1	1		
9	67F–42717–00	RUBBER, SEAL 2 JOINT EN CAOUTCHOUC 2	1	1	1	1		
10	6KA–14750–00	SILENCER ASSY SILENCIEUX	1	1	1	1		
11	95D95–06020	BOLT, FLANGE DEEP RECESS BOULON FIXATION	2	2	2	2		
12	6CB–14755–01	GASKET, SILENCER JOINT, SILENCIEUX	1	1	1	1		
13	6CB–41132–01	MANIFOLD, EXHAUST PIPE D'ECHAPPEMENT	1	1	1	1		
14	6CB–41134–00	GASKET, EXHAUST MANIFOLD JOINT, PIPE D'ECHAPPEMENT	1	1	1	1		
15	97E75–08560	BOLT, HEXAGON W/W DEEP RECESS VIS HEXAGONAL AVC RONDELLE	4	4	4	4		
16	6CB–41138–00	SEAL, EXT. 1 JOINT DE GROUPE 1	1	1	1	1		
17	6CB–41135–00	GASKET, EXHAUST MANIFOLD JOINT, PIPE D'ECHAPPEMENT	1	1	1	1		
18	6KA–45181–00	PLATE PLAQUETTE	1	1	1	1		
19	6CE–41136–00	GASKET, EXHAUST MANIFOLD 4 JOINT, PIPE D'ECHAPPEMENT 4	1	1	1	1		
20	6KA–14711–00	MUFFLER 1 POT D'ECHAPPEMENT 1	1	1	1	1		
21	97E75–08535	BOLT, HEXAGON W/W DEEP RECESS VIS HEXAGONAL AVC RONDELLE	9	9	9	9		
22	93606–19M23	PIN, DOWEL GOUPILLE	2	2	2	2		
23	6CE–45127–00	SEAL JOINT	1	1	1	1		
24	6CE–45123–00	GASKET, MUFFLER JOINT, POT DE DETENTE	1	1	1	1		
25	6KA–45111–01–8D	CASING, UPPER FOURREAU		1				GRAY GRAY
	6KA–45111–01–CE	CASING, UPPER FOURREAU	1		1	1		WHITE WHITE
26	6CB–45113–10	GASKET, UPPER CASING JOINT, TUBE D'ARBRE	1	1	1	1		

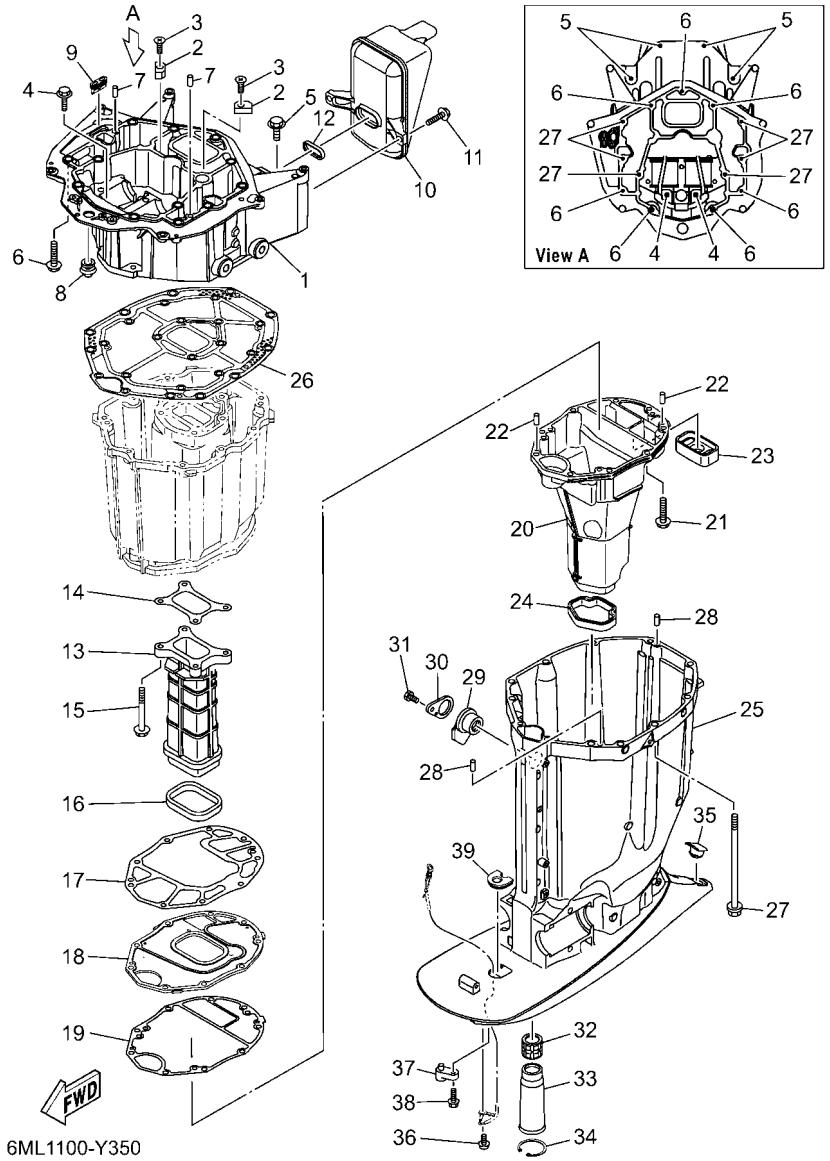

FIG. 35 UPPER CASING FOURREAU

REF. NO.	PART NO. N° PIECES	DESCRIPTION DESCRIPTION	SA	NSA	NSA2	6MM1		REMARKS REMARQUES
27	90119–10070	BOLT, WITH WASHER BOULON, AVEC RONDELLE	6	6	6	6		
28	93608–16M16	PIN, DOWEL AXE	2	2	2	2		
29	6BB–15316–01	DAMPER 1 AMORTISSEUR 1	1	1	1	1		
30	6BB–45152–01	COVER, UPPER CASING 2 CAPUCHON FOURREAU	1	1	1	1		
31	97D95–06012	BOLT, HEXAGON DEEP RECESS VIS HEXAGONAL	1	1	1	1		
32	69J–45318–01	BUSHING, DRIVE SHAFT DOUILLE, ARBRE MOTEUR	1	1	1	1		
33	6KA–46153–00	COLLAR, GUIDE COLLIER DE GUIDE	1	1	1	1		
34	93420–50093	CIRCLIP CIRCLIP, TYPE S	1	1	1	1		
35	61A–45155–01	CAP CAPUCHON	1	1	1	1		
36	95D95–06010	BOLT, FLANGE DEEP RECESS BOULON FIXATION	1	1	1	1		
37	6ML–45379–00	NIPPLE, HOSE RACCORD D'ESSENCE	1	1	1	1		
38	90119–06287	BOLT, WITH WASHER BOULON, AVEC RONDELLE	1	1	1	1		
39	6KA–44521–00	SEAL JOINT	1	1	1	1		

FIG. 36 OIL PAN — VENTILATEUR D'HUILE

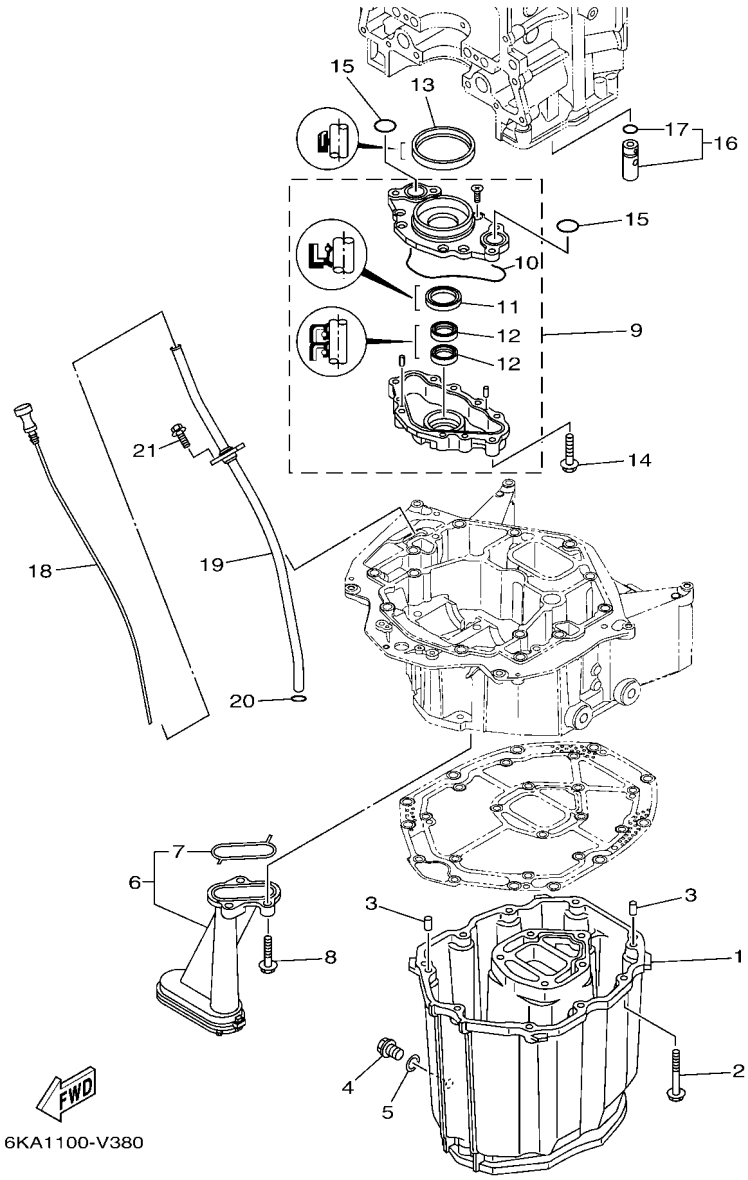

REF. NO.	PART NO. N° PIECES	DESCRIPTION DESCRIPTION	SA	NSA	NSA2	6MM1		REMARKS REMARQUES
1	6CB–15311–01	OIL PAN VENTILATEUR D'HUILE	1	1	1	1		
2	97E75–08535	BOLT, HEXAGON W/W DEEP RECESS VIS HEXAGONAL AVC RONDELLE	10	10	10	10		
3	93608–16M16	PIN, DOWEL AXE	2	2	2	2		
4	90340–14M06	PLUG, STRAIGHT SCREW PLOT, FILETE DROIT	1	1	1	1		
5	90430–14M09	GASKET JOINT	1	1	1	1		
6	6CB–13411–00	STRAINER, OIL FILTRE, HUILE	1	1	1	1		
7	6AW–13415–00	.SEAL, OIL STRAINER .JOINT, FILTRE A HUILE	1	1	1	1		
8	95812–06025	BOLT, FLANGE BOULON	3	3	3	3		
9	6CB–13300–00	OIL PUMP ASSY POMPE A HUILE COMPLETE	1	1	1	1		
10	6CB–13329–00	.GASKET, PUMP COVER .JOINT, COUVERCLE DE POMPE	1	1	1	1		
11	6AW–13119–00	.OIL SEAL .JOINT SPY	1	1	1	1		
12	69J–13631–00	.OIL SEAL .JOINT SPY	2	2	2	2		
13	6CB–11355–00	SEAL, CYLINDER 1 JOINT, SPY CYLINDRE	1	1	1	1		
14	95D75–06040	BOLT, FLANGE DEEP RECESS BOULON FIXATION	4	4	4	4		
15	93210–26658	O-RING JOINT TORIQUE	2	2	2	2		
16	6CB–13490–00	RELIEF VALVE ASSY SOUPAPE DE SECURITE COMPLET	1	1	1	1		
17	6CB–13473–00	.O-RING .JOINT TORIQUE	1	1	1	1		
18	6ML–15362–00	PLUG, OIL LEVEL PLOT, NIVEAU D'HUILE	1	1	1	1		
19	6KA–15377–00	GUIDE, INLET GUIDE D'ADMISSION	1	1	1	1		
20	93210–19MJ3	O-RING JOINT TORIQUE	1	1	1	1		
21	95D95–06016	BOLT, FLANGE DEEP RECESS BOULON FIXATION	2	2	2	2		

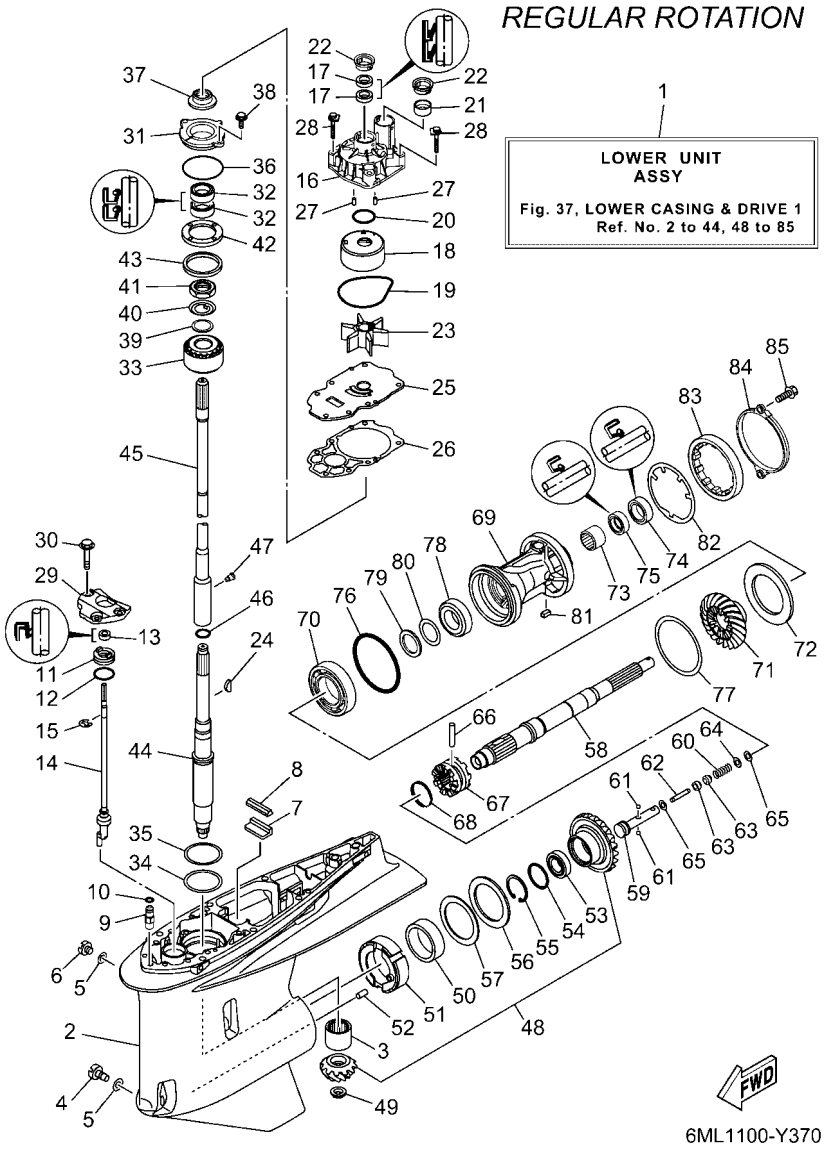

FIG. 37 LOWER CASING & DRIVE 1 — BOITIER D'HELICE TRANSMISSION1

REF. NO.	PART NO. N° PIECES	DESCRIPTION DESCRIPTION	SA	NSA	NSA2	6MM1		REMARKS REMARQUES
1	6ML–45300–00–CE	LOWER UNIT ASSY UNITE INFERIEURE (ENS.)	1					WHITE, RH WHITE, RH
2	6KA–45301–00–CE	CASING, LOWER BEQUILLE	1					WHITE WHITE
3	93311–83280	BEARING ROULEMENT	1					
4	688–45341–10	PLUG, DRAIN BOUCHON DE VIDANGE	1					
5	90430–08003	GASKET JOINT	2					
6	90340–08002	PLUG, STRAIGHT SCREW PLOT, FILETE DROIT	1					
7	663–45376–00	GUIDE, SEAL DAMPER BUTEE, JOINT CAOUTCHOUC	1					
8	6CE–45375–00	DAMPER, SEAL BOURRELET, CAOUTCHOUC	1					
9	63P–45378–00	NIPPLE, HOSE RACCORD, TUYAU	1					
10	93210–07003	O-RING JOINT TORIQUE	1					
11	6CE–45321–20	PLATE PLAQUETTE	1					
12	93210–33M49	O-RING JOINT TORIQUE	1					
13	93106–10001	OIL SEAL JOINT SPY	1					
14	6KA–44150–00	SHIFT CAM ASSY CAME D'INVERSION	1					
15	99001–09600	CIRCLIP CIRCLIP	1					
16	6CE–44311–01	HOUSING, WATER PUMP CORPS, POMPE A EAU	1					
17	93104–22M07	OIL SEAL JOINT SPY	2					
18	6AW–44322–00	INSERT, CARTRIDGE CUVETTE	1					
19	93210–94003	O-RING JOINT TORIQUE	1					
20	93210–37160	O-RING JOINT TORIQUE	1					
21	6AW–44365–01	DAMPER, WATER SEAL 1 JOINT, TUBE D'EAU 1	1					
22	6AW–44312–00	COVER, WATER PUMP HOUSING COUVERCLE	2					
23	6CE–44352–00	IMPELLER TURBINE	1					
24	90280–04002	KEY, WOODRUFF CLAVETTE, DEMI-LUNE	1					
25	6CE–44323–01	OUTER PLATE, CARTRIDGE PLAQUE EXTERIEURE	1					
26	6CE–44315–00	GASKET, WATER PUMP JOINT, POMPE A EAU	1					
27	93606–12019	PIN, DOWEL GOUPILLE	2					

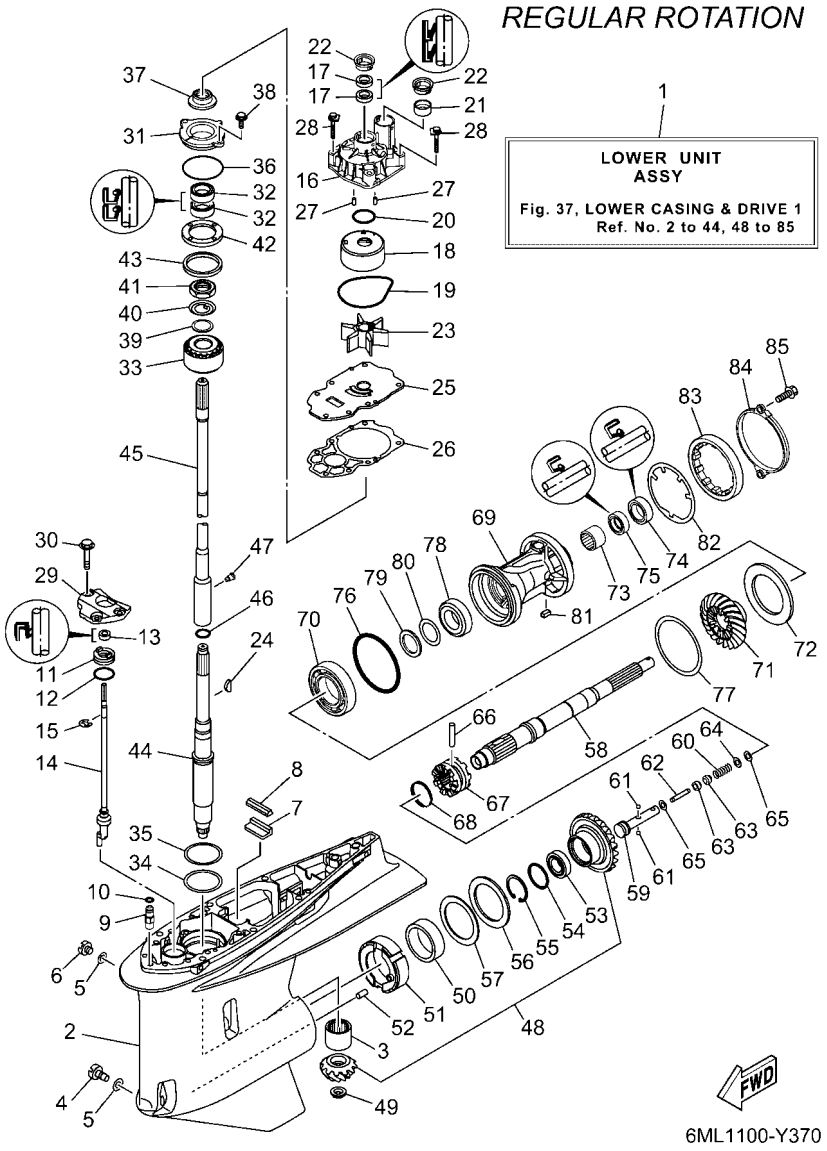

FIG. 37 LOWER CASING & DRIVE 1 — BOITIER D'HELICE TRANSMISSION1

REF. NO.	PART NO. N° PIECES	DESCRIPTION DESCRIPTION	SA	NSA	NSA2	6MM1		REMARKS REMARQUES
28	90119–08191	BOLT, WITH WASHER BOULON, AVEC RONDELLE	4					
29	6CB–44312–00	COVER, WATER PUMP HOUSING COUVERCLE	1					
30	90119–08180	BOLT, WITH WASHER BOULON, AVEC RONDELLE	3					
31	6AW–45335–00–CA	HOUSING, OIL SEAL LOGEMENT DE JOINT SPY	1					
32	93101–28019	OIL SEAL JOINT SPY	2					
33	93399–99962	BEARING ROULEMENT	1					
34	90201–68008	WASHER, PLATE RONDELLE, PLATE	1					
35	6AW–45587–00	SHIM (T:0.10MM) CALE (T:0.10MM)	1					UR UR
	6AW–45587–10	SHIM (T:0.12MM) CALE (T:0.12MM)	1					UR UR
	6AW–45587–20	SHIM (T:0.15MM) CALE (T:0.15MM)	1					UR UR
	6AW–45587–30	SHIM (T:0.18MM) CALE (T:0.18MM)	1					UR UR
	6AW–45587–40	SHIM (T:0.30MM) CALE (T:0.30MM)	1					UR UR
	6AW–45587–50	SHIM (T:0.40MM) CALE (T:0.40MM)	1					UR UR
	6AW–45587–60	SHIM (T:0.50MM) CALE (T:0.50MM)	1					UR UR
36	93210–69MG6	O-RING JOINT TORIQUE	1					
37	6KA–45344–00	COVER, OIL SEAL FLASQE, JOINT D'HUILE	1					
38	97E95–08520	BOLT, HEXAGON W/W DEEP RECESS VIS HEXAGONAL AVC RONDELLE	2					
39	90201–301U7	WASHER, PLATE RONDELLE, PLATE	1					
40	90214–30003	WASHER, CLAW RONDELLE, A GRIFFES	1					
41	90170–30M18	NUT ECROU	1					
42	6AW–45244–00	NUT ECROU	1					
43	6T5–45539–00	SPACER 2 ENTRETOISE 2	1					
44	6KA–45501–00	DRIVE SHAFT COMP. ARBRE MOTEUR COMP.	1					
45	6KA–45802–00	INTERMEDI. DRIVE SHAFT COMP. INTERMEDI. ARBRE MOTEUR COMP	1					UR X(25.2") UR X(25.2")
	6KA–45802–10	INTERMEDI. DRIVE SHAFT COMP. INTERMEDI. ARBRE MOTEUR COMP	1					UR U(30.2") UR U(30.2")
46	93210–22MF1	O-RING JOINT TORIQUE	1					
47	90149–05048	SCREW VIS	1					

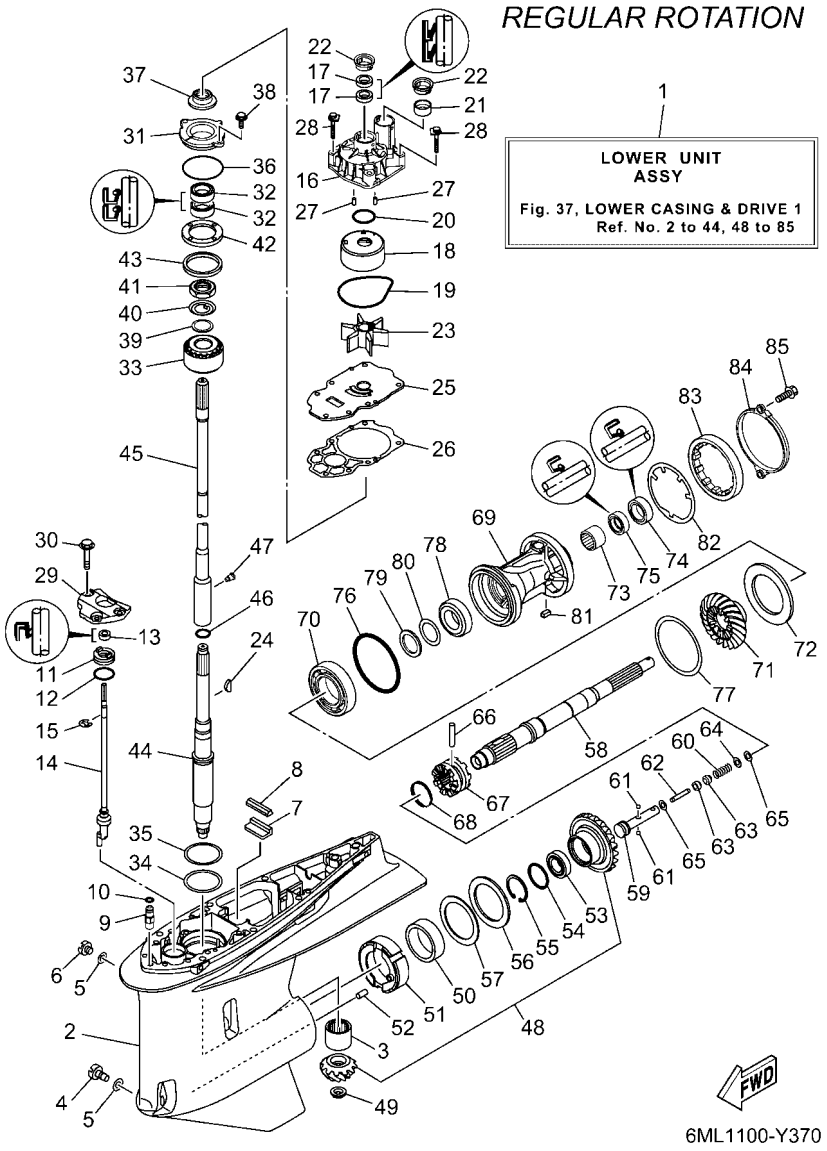

FIG. 37 LOWER CASING & DRIVE 1 — BOITIER D'HELICE TRANSMISSION1

REF. NO.	PART NO. N° PIECES	DESCRIPTION DESCRIPTION	SA	NSA	NSA2	6MM1		REMARKS REMARQUES
48	6KA–45550–00	GEAR SET KIT, PIGNON	1					
49	90179–16017	NUT ECROU	1					
50	93311–85894	BEARING ROULEMENT	1					
51	6CB–45824–00	ADAPTER ADAPTATEUR	1					
52	93608–16M16	PIN, DOWEL AXE	1					
53	93332–000A4	BEARING ROULEMENT	1					
54	90201–41008	WASHER, PLATE RONDELLE, PLATE	1					
55	99009–47500	CIRCLIP CIRCLIP	1					
56	93340–67011	BEARING CERVEAUX DE DIRECTION	1					
57	6CB–45567–00	SHIM (T:2.00MM) CALE (T:2.00MM)	1					UR UR
	6CB–45567–10	SHIM (T:2.03MM) CALE (T:2.03MM)	1					UR UR
	6CB–45567–20	SHIM (T:2.06MM) CALE (T:2.06MM)	1					UR UR
	6CB–45567–30	SHIM (T:2.09MM) CALE (T:2.09MM)	1					UR UR
	6CB–45567–40	SHIM (T:2.12MM) CALE (T:2.12MM)	1					UR UR
	6CB–45567–50	SHIM (T:2.15MM) CALE (T:2.15MM)	1					UR UR
58	6CB–45611–00	SHAFT, PROPELLER ARBRE, HELICE	1					
59	6CB–45634–00	SLIDE, SHIFT CONTRE-POUSSOIR	1					
60	90501–10M77	SPRING, COMPRESSION RESSORT, COMPRESSION	1					
61	93501–04011	BALL BILLE	2					
62	6H1–45668–00	SHAFT, FREE 1 AXE 1	1					
63	61A–45635–00	PLUNGER, SHIFT POUSSOIR D'EMBRAYAGE	2					
64	90201–02M00	WASHER, PLATE RONDELLE, PLATE	1					
65	90183–02M03	NUT, SPRING ECROU, RESSORT	2					
66	90250–08M07	PIN, STRAIGHT GOUPILLE, DROITE	1					
67	6ML–45631–00	CLUTCH, DOG CRABOT	1					
68	6E5–45633–01	RING, CROSS PIN JONC, GOUPILLE CRABOT	1					
69	6CE–45332–00–CA	HOUSING, BEARING FLASQUE, ROULEMENT	1					

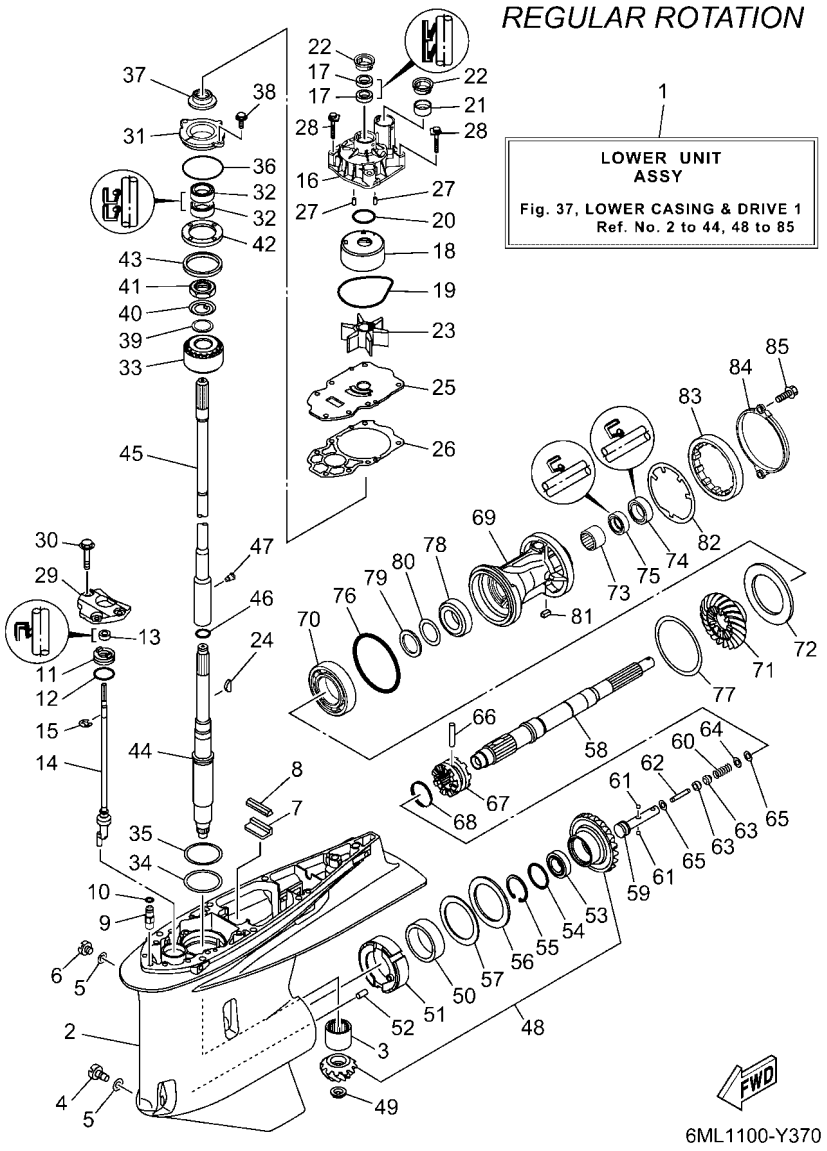

FIG. 37 LOWER CASING & DRIVE 1 — BOITIER D'HELICE TRANSMISSION1

REF. NO.	PART NO. N° PIECES	DESCRIPTION DESCRIPTION	SA	NSA	NSA2	6MM1		REMARKS REMARQUES
70	93306–209U0	BEARING ROULEMENT	1					
71	6KA–45571–00	GEAR 2 (21T) PIGNON 2 (21T)	1					
72	6CB–45576–00	WASHER, THRUST 2 RONDELLE DE CALAGE 2	1					
73	93315–43061	BEARING ROULEMENT	1					
74	93101–30030	OIL SEAL JOINT SPY	1					
75	93101–30019	OIL SEAL JOINT SPY	1					
76	93211–02001	O-RING JOINT TORIQUE	1					
77	6CB–45577–00	SHIM (T:0.10MM) CALE (T:0.10MM)	1					UR UR
	6CB–45577–10	SHIM (T:0.12MM) CALE (T:0.12MM)	1					UR UR
	6CB–45577–20	SHIM (T:0.15MM) CALE (T:0.15MM)	1					UR UR
	6CB–45577–30	SHIM (T:0.18MM) CALE (T:0.18MM)	1					UR UR
	6CB–45577–40	SHIM (T:0.30MM) CALE (T:0.30MM)	1					UR UR
	6CB–45577–50	SHIM (T:0.40MM) CALE (T:0.40MM)	1					UR UR
	6CB–45577–60	SHIM (T:0.50MM) CALE (T:0.50MM)	1					UR UR
78	93332–000A5	BEARING ROULEMENT	1					
79	90201–32008	WASHER, PLATE RONDELLE, PLATE	1					
80	676–45567–00	SHIM (T:0.7MM) CALE	1					UR UR
	676–45567–10	SHIM (T:0.8MM) CALE	1					UR UR
	676–45567–20	SHIM (T:0.9MM) CALE	1					UR UR
	676–45567–30	SHIM (T:1.0MM) CALE	1					UR UR
	676–45567–40	SHIM (T:1.1MM) CALE	1					UR UR
	676–45567–50	SHIM (T:1.2MM) CALE	1					UR UR
81	90282–05008	KEY, STRAIGHT CLAVETTE, DROITE	1					
82	6CB–45383–00	WASHER, CLAW FREIN D'ECROU	1					
83	6CB–45384–00	NUT ECROU	1					
84	6CE–45361–10	CAP, LOWER CASING COUVERCLE, BOITIER D'HELICE	1					
85	90105–08M61	BOLT, FLANGE BOULON, A COLLERETTE	2					

FIG. 38 LOWER CASING & DRIVE 2 — BOITIER D'HELICE TRANSMISSION2

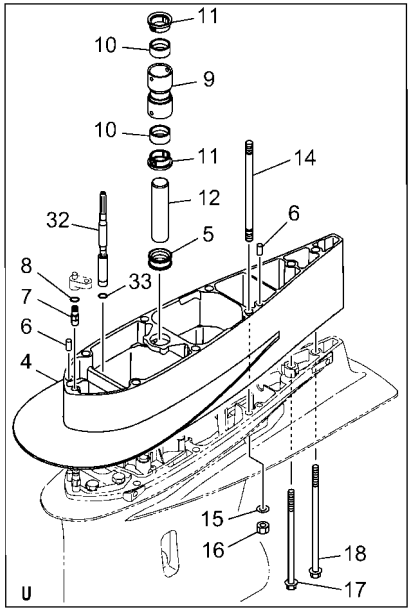

REGULAR ROTATION

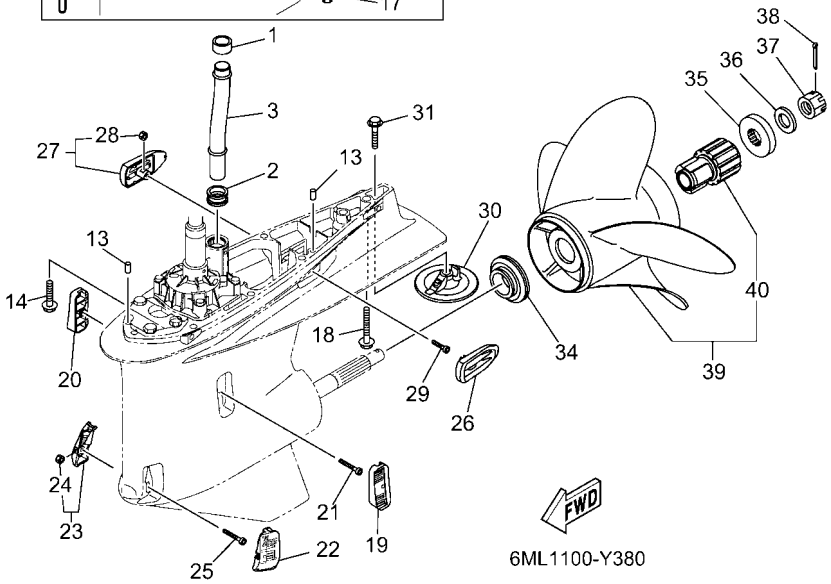

REF. NO.	PART NO. N° PIECES	DESCRIPTION DESCRIPTION	SA	NSA	NSA2	6MM1		REMARKS REMARQUES
1	6AW–44365–01	DAMPER, WATER SEAL 1 JOINT, TUBE D'EAU 1	1	1	1			
2	6AW–44366–01	DAMPER, WATER SEAL 2 JOINT, TUBE D'EAU 2	1	1	1			
3	6CE–44361–00	TUBE, WATER 1 TUBE D'EAU 1	1	1	1			
4	6KA–45211–00–CE	EXTENSION EXTENSION	1					WHITE, U(30.2") WHITE, U(30.2")
5	6AW–44366–01	DAMPER, WATER SEAL 2 JOINT, TUBE D'EAU 2	1					U(30.2") U(30.2")
6	93608–16M16	PIN, DOWEL AXE	2					U(30.2") U(30.2")
7	63P–45378–00	NIPPLE, HOSE RACCORD, TUYAU	1					U(30.2") U(30.2")
8	93210–07003	O-RING JOINT TORIQUE	1					U(30.2") U(30.2")
9	6CE–44362–00	TUBE, WATER 2 TUBE D'EAU 2	1					U(30.2") U(30.2")
10	6AW–44365–01	DAMPER, WATER SEAL 1 JOINT, TUBE D'EAU 1	2					U(30.2") U(30.2")
11	6AW–44312–00	COVER, WATER PUMP HOUSING COUVERCLE	2					U(30.2") U(30.2")
12	6AW–44363–00	TUBE, WATER 3 TUBE D'EAU 3	1					U(30.2") U(30.2")
13	93608–16M16	PIN, DOWEL AXE	2					
14	90119–10024	BOLT, WITH WASHER BOULON, AVEC RONDELLE	7					UR X(25.2") UR X(25.2")
	90116–10067	BOLT, STUD GOUJON	6					UR U(30.2") UR U(30.2")
15	92995–10600	WASHER RONDELLE	6					U(30.2") U(30.2")
16	95380–10600	NUT ECROU	6					U(30.2") U(30.2")
17	90119–10009	BOLT, WITH WASHER BOULON, AVEC RONDELLE	1					U(30.2") U(30.2")
18	97E75–10570	BOLT, HEXAGON W/W DEEP RECESS VIS HEXAGONAL AVC RONDELLE	1					UR X(25.2") UR X(25.2")
	90119–10008	BOLT, WITH WASHER BOULON, AVEC RONDELLE	1					UR U(30.2") UR U(30.2")
19	6KA–45214–00	COVER, WATER INLET 1 GRILLE, ENTREE D'EAU 1	1					
20	6KA–45215–00	COVER, WATER INLET 2 GRILLE, ENTREE D'EAU 2	1					
21	90110–05039	BOLT, HEXAGON SOCKET HEAD BOULON, TETE HEXAGONALE CREUSE	1					
22	6CE–45224–00	COVER, WATER INLET 3 GRILLE, ENTREE D'EAU 3	1					
23	6CE–45225–00	COVER, WATER INLET 4 GRILLE, ENTREE D'EAU 4	1					
24	90185–05002	.NUT, NYLON .ECROU,AUTO-BLOQUANT	1					
25	90110–05039	BOLT, HEXAGON SOCKET HEAD BOULON, TETE HEXAGONALE CREUSE	1					

FIG. 38 LOWER CASING & DRIVE 2 — BOITIER D'HELICE TRANSMISSION2

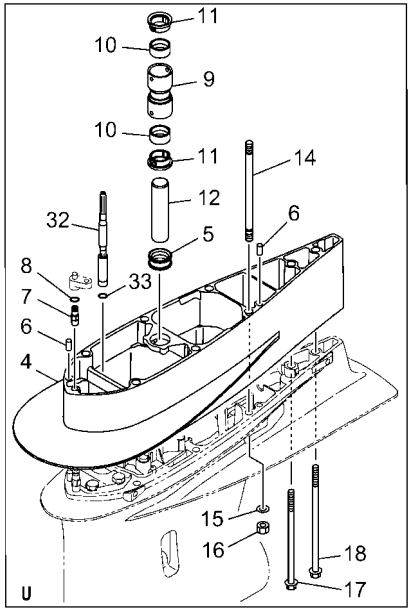

REGULAR ROTATION

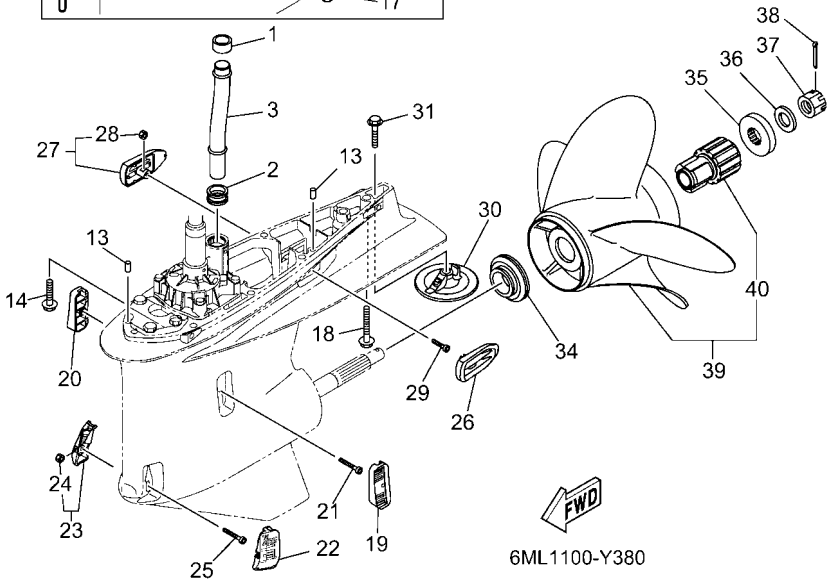

REF. NO.	PART NO. N° PIECES	DESCRIPTION DESCRIPTION	SA	NSA	NSA2	6MM1		REMARKS REMARQUES
26	6KA–45254–00	COVER, OUTLET 1 COUVERCLE, SORTIE 1	1					
27	6KA–45255–00	COVER, OUTLET 2 COUVERCLE, SORTIE 2	1					
28	90185–05002	.NUT, NYLON .ECROU,AUTO-BLOQUANT	1					
29	91380–05020	BOLT BOULON	1					
30	6CE–45373–00	ANODE ANODE	1					
31	90105–10M00	BOLT, FLANGE BOULON, A COLLERETTE	1					
32	6KA–44190–00	JT. SHIFT ROD COMP. JOINT, TRINGLE DE SELECTEUR CO	1					U(30.2") U(30.2")
33	93210–09165	O-RING JOINT TORIQUE	1					U(30.2") U(30.2")
34	69J–45987–00	SPACER 1 ENTRETOISE 1	1					
35	688–45997–01	SPACER 2 ENTRETOISE 2	1					
36	92990–18200	WASHER RONDELLE, PLATE	1					
37	90171–18M04	NUT, CASTLE ECROU, CRENELE	1					
38	91490–40030	PIN. COTTER GOUPILLE	1					
39	6ML–45B76–00	PROPELLER (4X15"X20"-T) HELICE (4X15"X20"-T)	1					UR UR
	6ML–45B78–00	PROPELLER (4X15"X21"-T) HELICE (4X15"X21"-T)	1					UR UR
	6ML–45B80–00	PROPELLER (4X15"X22"-T) HELICE (4X15"X22"-T)	1					UR UR
	6ML–45B82–00	PROPELLER (4X15"X23"-T) HELICE (4X15"X23"-T)	1					UR UR
	6ML–45B84–00	PROPELLER (4X15"X24"-T) HELICE (4X15"X24"-T)	1					UR UR
	6ML–45B86–00	PROPELLER (4X15"X25"-T) HELICE (4X15"X25"-T)	1					UR UR
40	6CE–45C81–10	.DAMPER RUBBER, PROPELLER 1 .AMORTISSEUR HELICE 1	1					

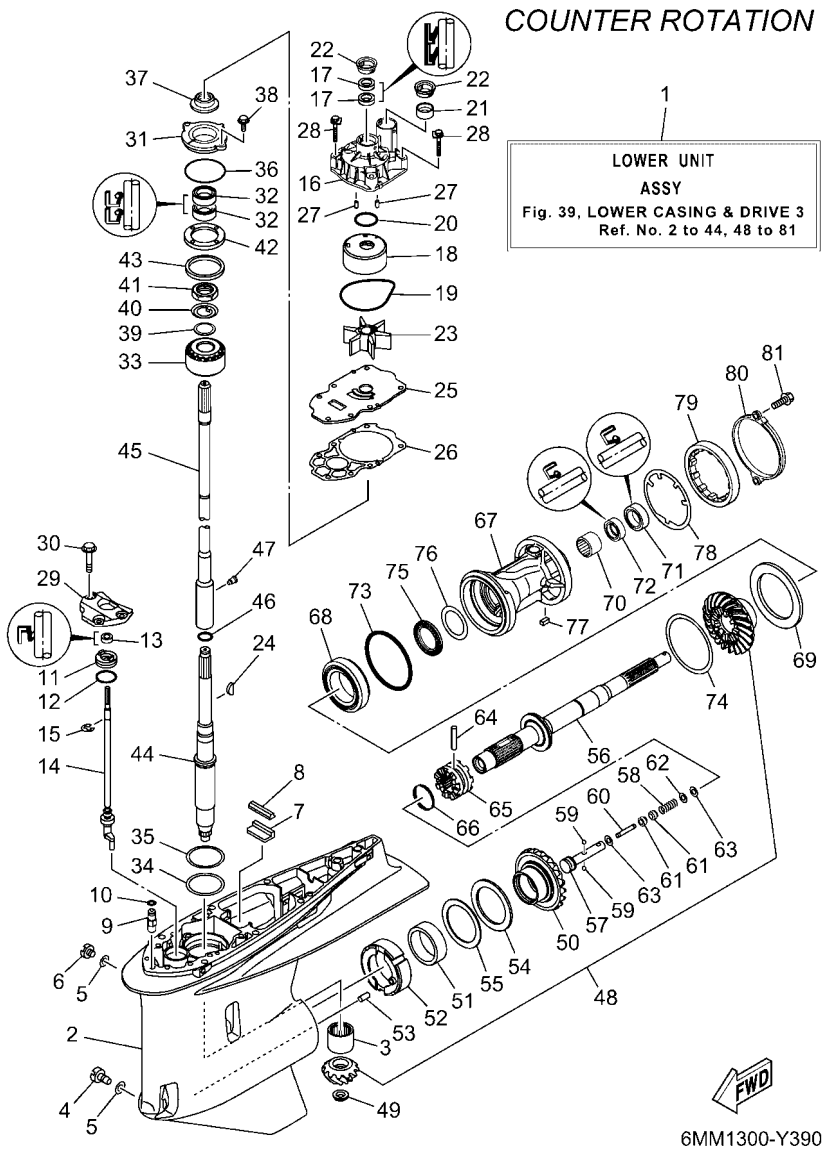

FIG. 39 LOWER CASING & DRIVE 3 — BOITIER D'HELICE TRANSMISSION3

REF. NO.	PART NO. N° PIECES	DESCRIPTION DESCRIPTION	SA	NSA	NSA2	6MM1		REMARKS REMARQUES
1	6MM–45300–00–CE	LOWER UNIT ASSY UNITE INFERIEURE (ENS.)				1		WHITE, LH WHITE, LH
2	6KA–45301–00–CE	CASING, LOWER BEQUILLE				1		WHITE WHITE
3	93311–83280	BEARING ROULEMENT				1		
4	688–45341–10	PLUG, DRAIN BOUCHON DE VIDANGE				1		
5	90430–08003	GASKET JOINT				2		
6	90340–08002	PLUG, STRAIGHT SCREW PLOT, FILETE DROIT				1		
7	663–45376–00	GUIDE, SEAL DAMPER BUTEE, JOINT CAOUTCHOUC				1		
8	6CE–45375–00	DAMPER, SEAL BOURRELET, CAOUTCHOUC				1		
9	63P–45378–00	NIPPLE, HOSE RACCORD, TUYAU				1		
10	93210–07003	O-RING JOINT TORIQUE				1		
11	6CE–45321–20	PLATE PLAQUETTE				1		
12	93210–33M49	O-RING JOINT TORIQUE				1		
13	93106–10001	OIL SEAL JOINT SPY				1		
14	6KB–44150–00	SHIFT CAM ASSY CAME D'INVERSION				1		
15	99001–09600	CIRCLIP CIRCLIP				1		
16	6CE–44311–01	HOUSING, WATER PUMP CORPS, POMPE A EAU				1		
17	93104–22M07	OIL SEAL JOINT SPY				2		
18	6AW–44322–00	INSERT, CARTRIDGE CUVETTE				1		
19	93210–94003	O-RING JOINT TORIQUE				1		
20	93210–37160	O-RING JOINT TORIQUE				1		
21	6AW–44365–01	DAMPER, WATER SEAL 1 JOINT, TUBE D'EAU 1				1		
22	6AW–44312–00	COVER, WATER PUMP HOUSING COUVERCLE				2		
23	6CE–44352–00	IMPELLER TURBINE				1		
24	90280–04002	KEY, WOODRUFF CLAVETTE, DEMI-LUNE				1		
25	6CE–44323–01	OUTER PLATE, CARTRIDGE PLAQUE EXTERIEURE				1		
26	6CE–44315–00	GASKET, WATER PUMP JOINT, POMPE A EAU				1		
27	93606–12019	PIN, DOWEL GOUPILLE				2		

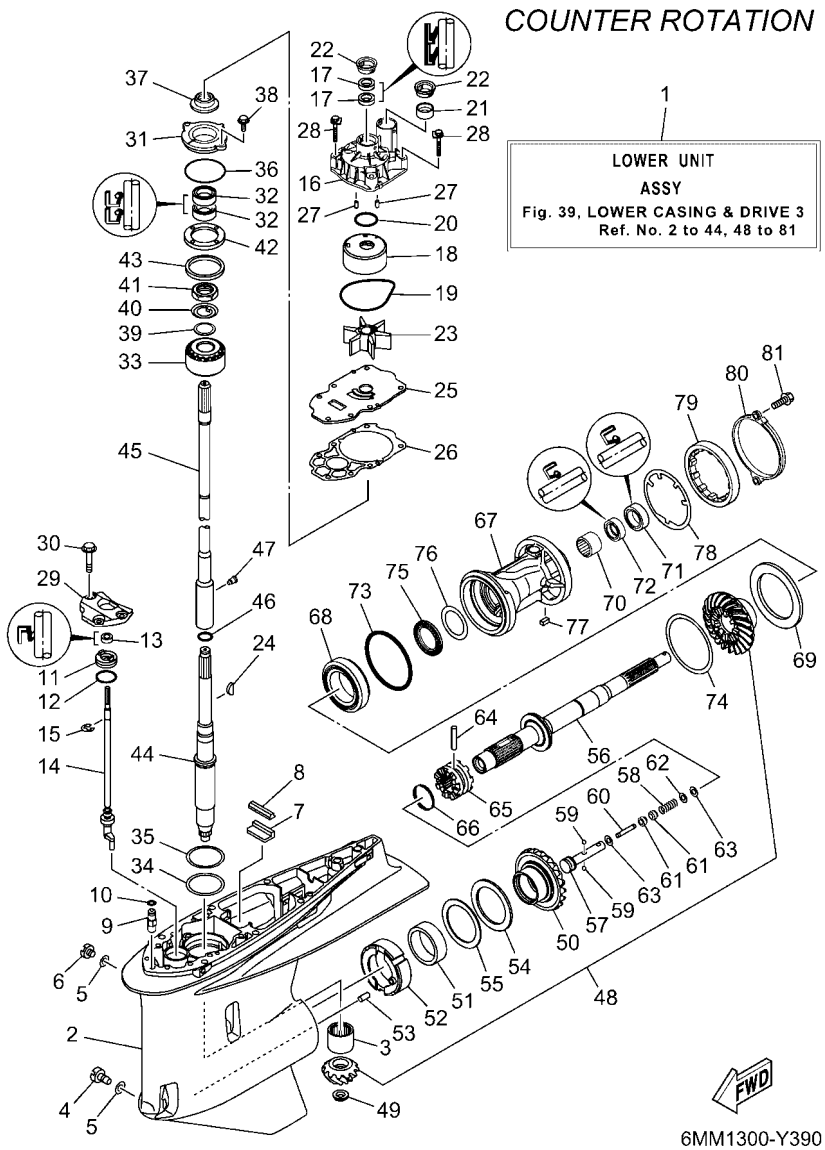

FIG. 39 LOWER CASING & DRIVE 3 — BOITIER D'HELICE TRANSMISSION3

REF. NO.	PART NO. N° PIECES	DESCRIPTION DESCRIPTION	SA	NSA	NSA2	6MM1		REMARKS REMARQUES
28	90119–08191	BOLT, WITH WASHER BOULON, AVEC RONDELLE				4		
29	6CB–44312–00	COVER, WATER PUMP HOUSING COUVERCLE				1		
30	90119–08180	BOLT, WITH WASHER BOULON, AVEC RONDELLE				3		
31	6AW–45335–00–CA	HOUSING, OIL SEAL LOGEMENT DE JOINT SPY				1		
32	93101–28019	OIL SEAL JOINT SPY				2		
33	93399–99962	BEARING ROULEMENT				1		
34	90201–68008	WASHER, PLATE RONDELLE, PLATE				1		
35	6AW–45587–00	SHIM (T:0.10MM) CALE (T:0.10MM)				1		UR UR
	6AW–45587–10	SHIM (T:0.12MM) CALE (T:0.12MM)				1		UR UR
	6AW–45587–20	SHIM (T:0.15MM) CALE (T:0.15MM)				1		UR UR
	6AW–45587–30	SHIM (T:0.18MM) CALE (T:0.18MM)				1		UR UR
	6AW–45587–40	SHIM (T:0.30MM) CALE (T:0.30MM)				1		UR UR
	6AW–45587–50	SHIM (T:0.40MM) CALE (T:0.40MM)				1		UR UR
	6AW–45587–60	SHIM (T:0.50MM) CALE (T:0.50MM)				1		UR UR
36	93210–69MG6	O-RING JOINT TORIQUE				1		
37	6KA–45344–00	COVER, OIL SEAL FLASQE, JOINT D'HUILE				1		
38	97E95–08520	BOLT, HEXAGON W/W DEEP RECESS VIS HEXAGONAL AVC RONDELLE				2		
39	90201–301U7	WASHER, PLATE RONDELLE, PLATE				1		
40	90214–30003	WASHER, CLAW RONDELLE, A GRIFFES				1		
41	90170–30M18	NUT ECROU				1		
42	6AW–45244–00	NUT ECROU				1		
43	6T5–45539–00	SPACER 2 ENTRETOISE 2				1		
44	6KA–45501–00	DRIVE SHAFT COMP. ARBRE MOTEUR COMP.				1		
45	6KA–45802–00	INTERMEDI. DRIVE SHAFT COMP. INTERMEDI. ARBRE MOTEUR COMP				1		UR X(25.2") UR X(25.2")
	6KA–45802–10	INTERMEDI. DRIVE SHAFT COMP. INTERMEDI. ARBRE MOTEUR COMP				1		UR U(30.2") UR U(30.2")
46	93210–22MF1	O-RING JOINT TORIQUE				1		
47	90149–05048	SCREW VIS				1		

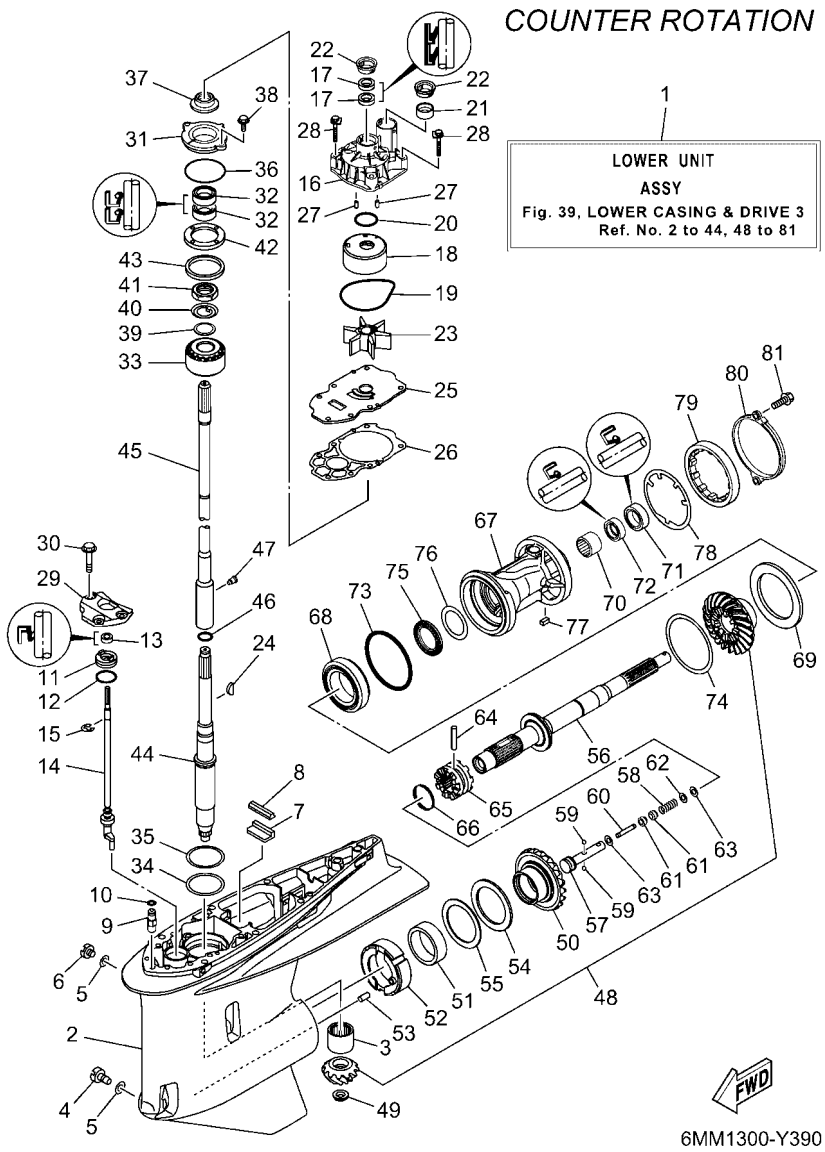

FIG. 39 LOWER CASING & DRIVE 3 — BOITIER D'HELICE TRANSMISSION3

REF. NO.	PART NO. N° PIECES	DESCRIPTION DESCRIPTION	SA	NSA	NSA2	6MM1		REMARKS REMARQUES
48	6KB–45550–00	GEAR SET KIT, PIGNON				1		
49	90179–16017	NUT ECROU				1		
50	6KB–45560–00	GEAR 1 (21T) PIGNON 1 (21T)				1		
51	93311–85894	BEARING ROULEMENT				1		
52	6CB–45824–00	ADAPTER ADAPTATEUR				1		
53	93608–16M16	PIN, DOWEL AXE				1		
54	93340–67011	BEARING CERVEAUX DE DIRECTION				1		
55	6CB–45567–00	SHIM (T:2.00MM) CALE (T:2.00MM)				1		UR UR
	6CB–45567–10	SHIM (T:2.03MM) CALE (T:2.03MM)				1		UR UR
	6CB–45567–20	SHIM (T:2.06MM) CALE (T:2.06MM)				1		UR UR
	6CB–45567–30	SHIM (T:2.09MM) CALE (T:2.09MM)				1		UR UR
	6CB–45567–40	SHIM (T:2.12MM) CALE (T:2.12MM)				1		UR UR
	6CB–45567–50	SHIM (T:2.15MM) CALE (T:2.15MM)				1		UR UR
56	6KB–45611–00	SHAFT, PROPELLER ARBRE, HELICE				1		
57	6CB–45634–00	SLIDE, SHIFT CONTRE-POUSSOIR				1		
58	90501–10M77	SPRING, COMPRESSION RESSORT, COMPRESSION				1		
59	93501–04011	BALL BILLE				2		
60	6H1–45668–00	SHAFT, FREE 1 AXE 1				1		
61	61A–45635–00	PLUNGER, SHIFT POUSSOIR D'EMBRAYAGE				2		
62	90201–02M00	WASHER, PLATE RONDELLE, PLATE				1		
63	90183–02M03	NUT, SPRING ECROU, RESSORT				2		
64	90250–08M07	PIN, STRAIGHT GOUPILLE, DROITE				1		
65	6ML–45631–00	CLUTCH, DOG CRABOT				1		
66	6E5–45633–01	RING, CROSS PIN JONC, GOUPILLE CRABOT				1		
67	6CF–45332–01–CA	HOUSING, BEARING FLASQUE, ROULEMENT				1		
68	93332–00048	BEARING ROULEMENT				1		
69	6CF–45576–00	WASHER, THRUST 2 RONDELLE DE CALAGE 2				1		

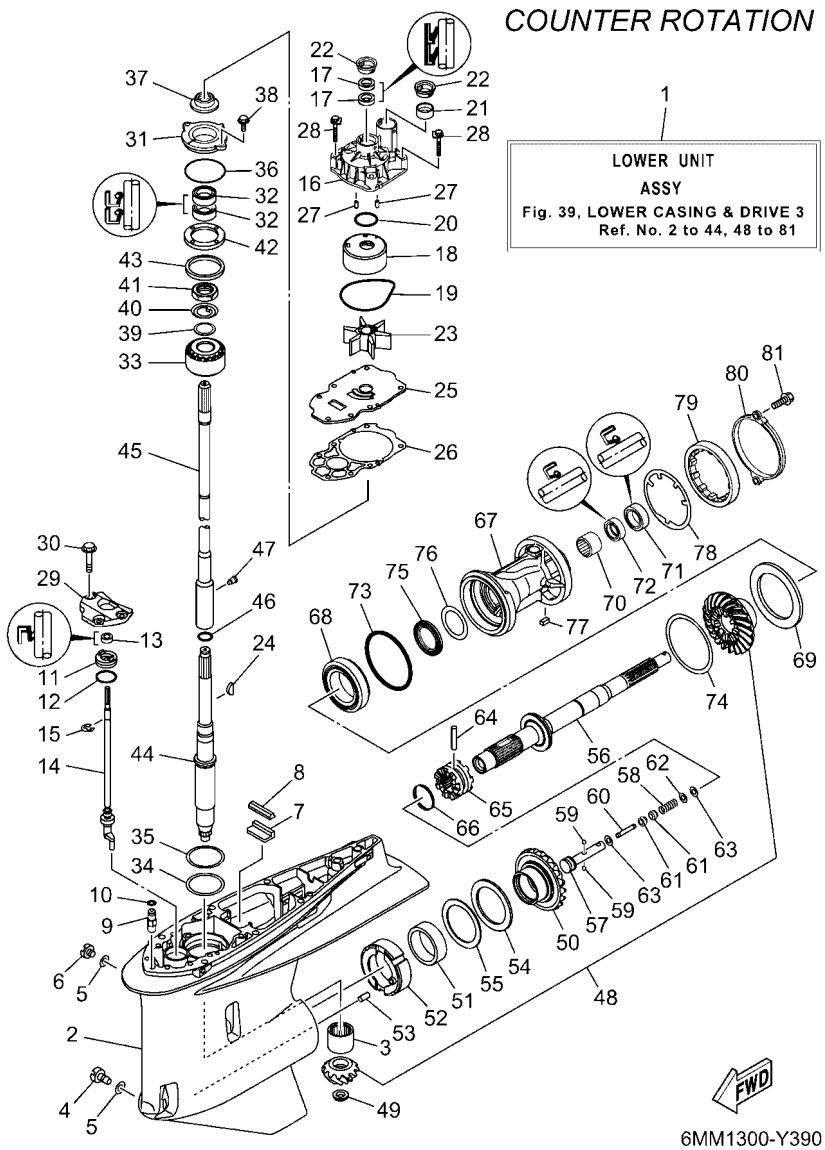

FIG. 39 LOWER CASING & DRIVE 3 — BOITIER D'HELICE TRANSMISSION3

REF. NO.	PART NO. N° PIECES	DESCRIPTION DESCRIPTION	SA	NSA	NSA2	6MM1		REMARKS REMARQUES
70	93315–43061	BEARING ROULEMENT				1		
71	93101–30030	OIL SEAL JOINT SPY				1		
72	93101–30019	OIL SEAL JOINT SPY				1		
73	93211–02001	O-RING JOINT TORIQUE				1		
74	6CB–45577–00	SHIM (T:0.10MM) CALE (T:0.10MM)				1		UR UR
	6CB–45577–10	SHIM (T:0.12MM) CALE (T:0.12MM)				1		UR UR
	6CB–45577–20	SHIM (T:0.15MM) CALE (T:0.15MM)				1		UR UR
	6CB–45577–30	SHIM (T:0.18MM) CALE (T:0.18MM)				1		UR UR
	6CB–45577–40	SHIM (T:0.30MM) CALE (T:0.30MM)				1		UR UR
	6CB–45577–50	SHIM (T:0.40MM) CALE (T:0.40MM)				1		UR UR
	6CB–45577–60	SHIM (T:0.50MM) CALE (T:0.50MM)				1		UR UR
75	93341–440U5	BEARING CERVEAUX DE DIRECTION				1		
76	6K1–45578–01	SHIM (T:0.10MM) CALE (T:0.10MM)				1		UR UR
	6K1–45578–10	SHIM (T:0.12MM) CALE (T:0.12MM)				1		UR UR
	6K1–45578–20	SHIM (T:0.15MM) CALE (T:0.15MM)				1		UR UR
	6K1–45578–30	SHIM (T:0.18MM) CALE (T:0.18MM)				1		UR UR
	6K1–45578–40	SHIM (T:0.30MM) CALE (T:0.30MM)				1		UR UR
	6K1–45578–50	SHIM (T:0.40MM) CALE (T:0.40MM)				1		UR UR
	6K1–45578–60	SHIM (T:0.50MM) CALE (T:0.50MM)				1		UR UR
77	90282–05008	KEY, STRAIGHT CLAVETTE, DROITE				1		
78	6CB–45383–00	WASHER, CLAW FREIN D'ECROU				1		
79	6CB–45384–00	NUT ECROU				1		
80	6CE–45361–10	CAP, LOWER CASING COUVERCLE, BOITIER D'HELICE				1		
81	90105–08M61	BOLT, FLANGE BOULON, A COLLERETTE				2		

FIG. 40 LOWER CASING & DRIVE 4 — BOITIER D'HELICE TRANSMISSION4

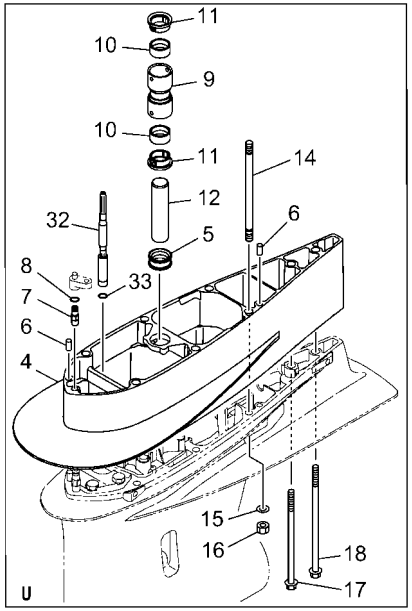

COUNTER ROTATION

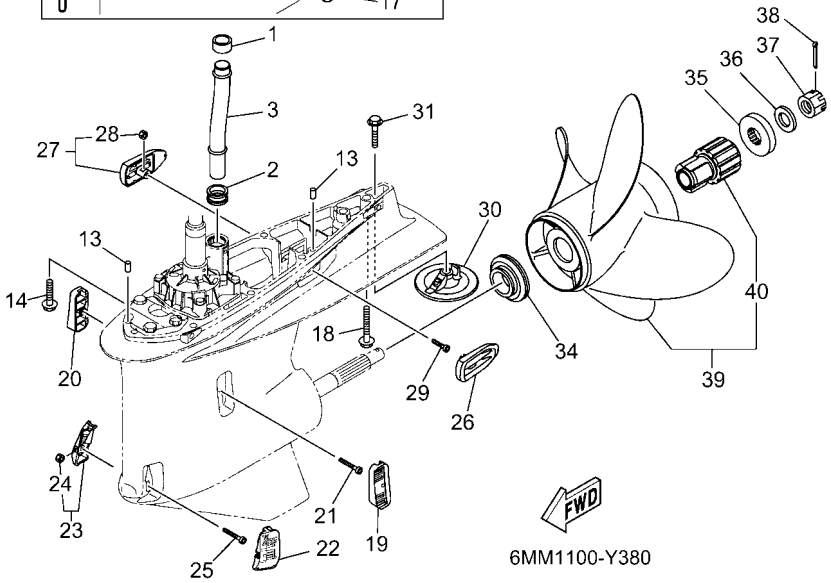

REF. NO.	PART NO. N° PIECES	DESCRIPTION DESCRIPTION	SA	NSA	NSA2	6MM1		REMARKS REMARQUES
1	6AW–44365–01	DAMPER, WATER SEAL 1 JOINT, TUBE D'EAU 1				1		
2	6AW–44366–01	DAMPER, WATER SEAL 2 JOINT, TUBE D'EAU 2				1		
3	6CE–44361–00	TUBE, WATER 1 TUBE D'EAU 1				1		
4	6KA–45211–00–CE	EXTENSION EXTENSION				1		WHITE, U(30.2") WHITE, U(30.2")
5	6AW–44366–01	DAMPER, WATER SEAL 2 JOINT, TUBE D'EAU 2				1		U(30.2") U(30.2")
6	93608–16M16	PIN, DOWEL AXE				2		U(30.2") U(30.2")
7	63P–45378–00	NIPPLE, HOSE RACCORD, TUYAU				1		U(30.2") U(30.2")
8	93210–07003	O-RING JOINT TORIQUE				1		U(30.2") U(30.2")
9	6CE–44362–00	TUBE, WATER 2 TUBE D'EAU 2				1		U(30.2") U(30.2")
10	6AW–44365–01	DAMPER, WATER SEAL 1 JOINT, TUBE D'EAU 1				2		U(30.2") U(30.2")
11	6AW–44312–00	COVER, WATER PUMP HOUSING COUVERCLE				2		U(30.2") U(30.2")
12	6AW–44363–00	TUBE, WATER 3 TUBE D'EAU 3				1		U(30.2") U(30.2")
13	93608–16M16	PIN, DOWEL AXE				2		
14	90119–10024	BOLT, WITH WASHER BOULON, AVEC RONDELLE				7		UR X(25.2") UR X(25.2")
	90116–10067	BOLT, STUD GOUJON				6		UR U(30.2") UR U(30.2")
15	92995–10600	WASHER RONDELLE				6		U(30.2") U(30.2")
16	95380–10600	NUT ECROU				6		U(30.2") U(30.2")
17	90119–10009	BOLT, WITH WASHER BOULON, AVEC RONDELLE				1		U(30.2") U(30.2")
18	97E75–10570	BOLT, HEXAGON W/W DEEP RECESS VIS HEXAGONAL AVC RONDELLE				1		UR X(25.2") UR X(25.2")
	90119–10008	BOLT, WITH WASHER BOULON, AVEC RONDELLE				1		UR U(30.2") UR U(30.2")
19	6KA–45214–00	COVER, WATER INLET 1 GRILLE, ENTREE D'EAU 1				1		
20	6KA–45215–00	COVER, WATER INLET 2 GRILLE, ENTREE D'EAU 2				1		
21	90110–05039	BOLT, HEXAGON SOCKET HEAD BOULON, TETE HEXAGONALE CREUSE				1		
22	6CE–45224–00	COVER, WATER INLET 3 GRILLE, ENTREE D'EAU 3				1		
23	6CE–45225–00	COVER, WATER INLET 4 GRILLE, ENTREE D'EAU 4				1		
24	90185–05002	.NUT, NYLON .ECROU,AUTO-BLOQUANT				1		
25	90110–05039	BOLT, HEXAGON SOCKET HEAD BOULON, TETE HEXAGONALE CREUSE				1		

FIG. 40 LOWER CASING & DRIVE 4 — BOITIER D'HELICE TRANSMISSION4

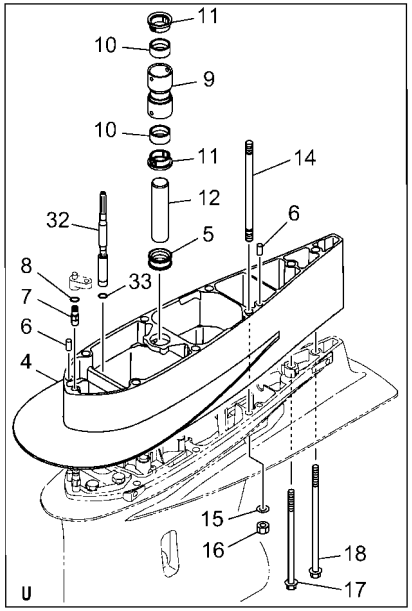

COUNTER ROTATION

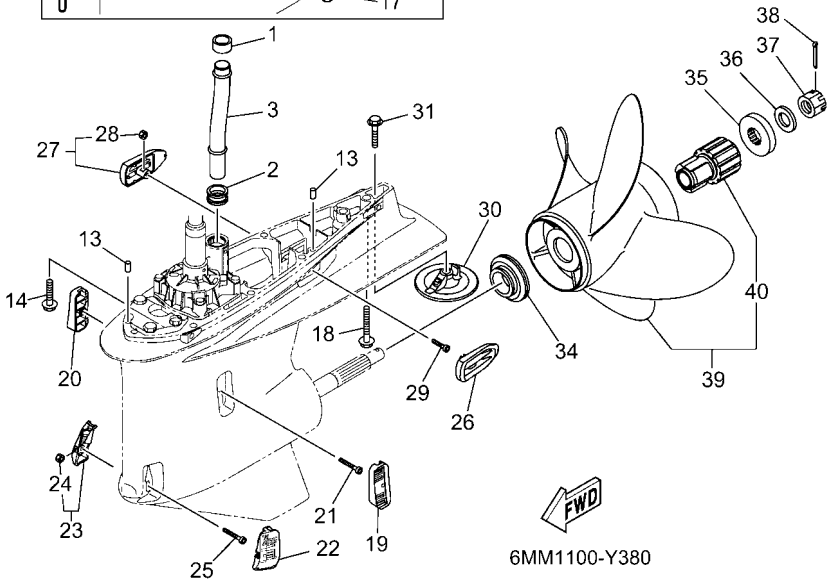

REF. NO.	PART NO. N° PIECES	DESCRIPTION DESCRIPTION	SA	NSA	NSA2	6MM1		REMARKS REMARQUES
26	6KA–45254–00	COVER, OUTLET 1 COUVERCLE, SORTIE 1				1		
27	6KA–45255–00	COVER, OUTLET 2 COUVERCLE, SORTIE 2				1		
28	90185–05002	.NUT, NYLON .ECROU,AUTO-BLOQUANT				1		
29	91380–05020	BOLT BOULON				1		
30	6CE–45373–00	ANODE ANODE				1		
31	90105–10M00	BOLT, FLANGE BOULON, A COLLERETTE				1		
32	6KA–44190–00	JT. SHIFT ROD COMP. JOINT, TRINGLE DE SELECTEUR CO				1		U(30.2") U(30.2")
33	93210–09165	O-RING JOINT TORIQUE				1		U(30.2") U(30.2")
34	69J–45987–00	SPACER 1 ENTRETOISE 1				1		
35	688–45997–01	SPACER 2 ENTRETOISE 2				1		
36	92990–18200	WASHER RONDELLE, PLATE				1		
37	90171–18M04	NUT, CASTLE ECROU, CRENELE				1		
38	91490–40030	PIN. COTTER GOUPILLE				1		
39	6MM–45B76–00	PROPELLER (4X15"X20"-TL) HELICE (4X15"X20"-TL)				1		UR UR
	6MM–45B78–00	PROPELLER (4X15"X21"-TL) HELICE (4X15"X21"-TL)				1		UR UR
	6MM–45B80–00	PROPELLER (4X15"X22"-TL) HELICE (4X15"X22"-TL)				1		UR UR
	6MM–45B82–00	PROPELLER (4X15"X23"-TL) HELICE (4X15"X23"-TL)				1		UR UR
	6MM–45B84–00	PROPELLER (4X15"X24"-TL) HELICE (4X15"X24"-TL)				1		UR UR
	6MM–45B86–00	PROPELLER (4X15"X25"-TL) HELICE (4X15"X25"-TL)				1		UR UR
40	6CE–45C81–10	.DAMPER RUBBER, PROPELLER 1 .AMORTISSEUR HELICE 1				1		

FIG. 41 OPTIONAL PARTS 1 — PIECES OPTIONNELLES 1

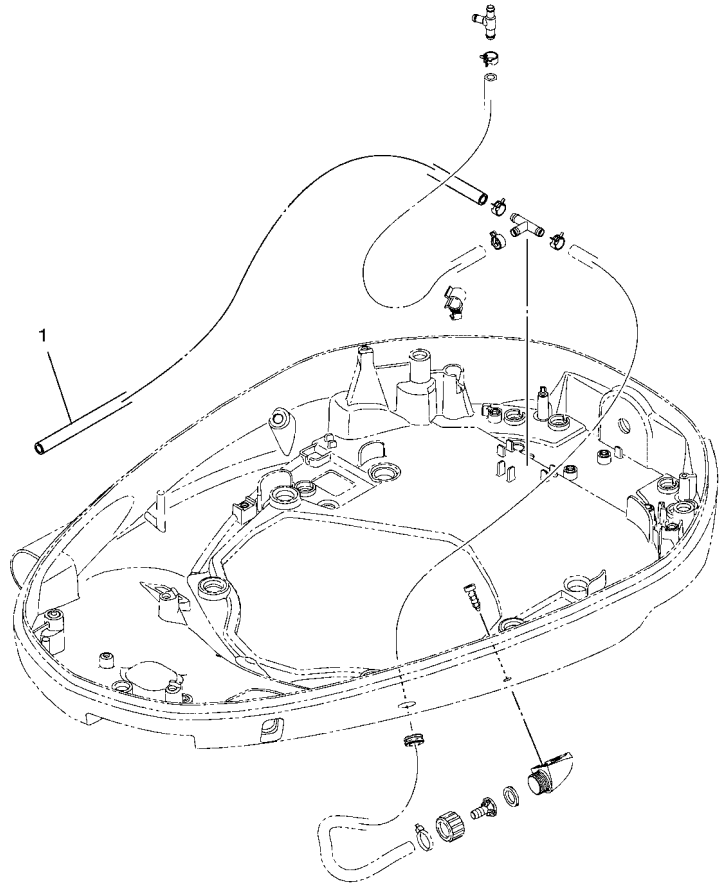

6KA1100-V410

REF. NO.	PART NO. N° PIECES	DESCRIPTION DESCRIPTION	SA	NSA	NSA2	6MM1		REMARKS REMARQUES
1	6KA–44385–00	HOSE, WATER 1 TUBE D'EAU 1	1	1	1	1		

FIG. 42 OPTIONAL PARTS 2 — PIECES OPTIONNELLES 2

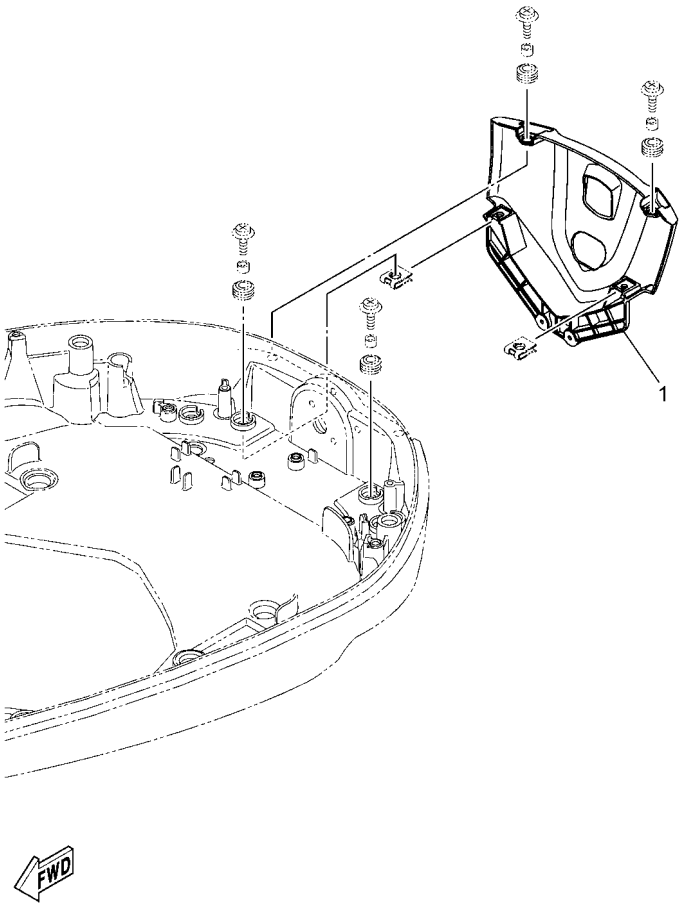

6ML1100-Y400

REF. NO.	PART NO. N° PIECES	DESCRIPTION DESCRIPTION	SA	NSA	NSA2	6MM1		REMARKS REMARQUES
1	6KA–42723–10–8D	COVER, BOTTOM COUVERCLE		1				GRAY GRAY
	6KA–42723–10–CE	COVER, BOTTOM COUVERCLE	1		1	1		WHITE WHITE

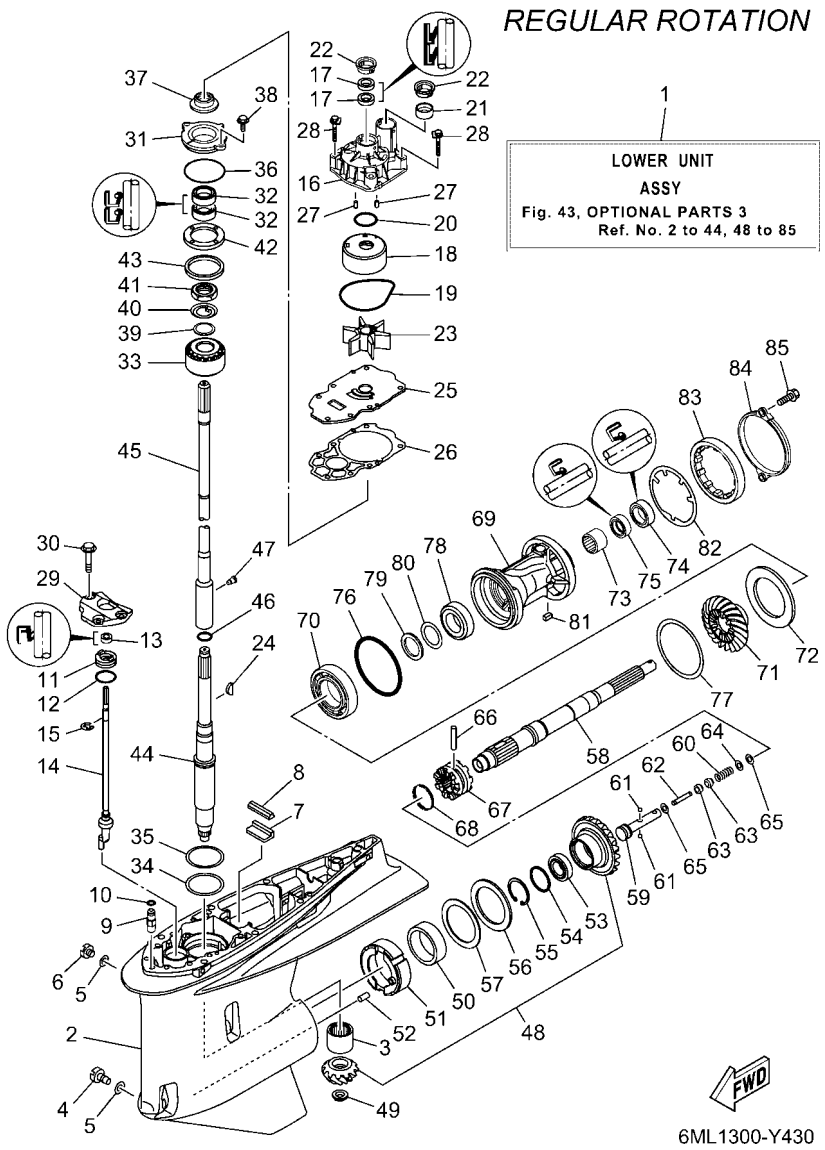

FIG. 43 OPTIONAL PARTS 3 — PIECES OPTIONNELLES 3

REF. NO.	PART NO. N° PIECES	DESCRIPTION DESCRIPTION	SA	NSA	NSA2	6MM1		REMARKS REMARQUES
1	6ML–45300–00–8D	LOWER UNIT ASSY UNITE INFERIEURE (ENS.)		1				GRAY, RH GRAY, RH
	6ML–45300–00–CE	LOWER UNIT ASSY UNITE INFERIEURE (ENS.)			1			WHITE, RH WHITE, RH
2	6KA–45301–00–8D	CASING, LOWER BEQUILLE		1				GRAY GRAY
	6KA–45301–00–CE	CASING, LOWER BEQUILLE			1			WHITE WHITE
3	93311–83280	BEARING ROULEMENT		1	1			
4	688–45341–10	PLUG, DRAIN BOUCHON DE VIDANGE		1	1			
5	90430–08003	GASKET JOINT		2	2			
6	90340–08002	PLUG, STRAIGHT SCREW PLOT, FILETE DROIT		1	1			
7	663–45376–00	GUIDE, SEAL DAMPER BUTEE, JOINT CAOUTCHOUC		1	1			
8	6CE–45375–00	DAMPER, SEAL BOURRELET, CAOUTCHOUC		1	1			
9	63P–45378–00	NIPPLE, HOSE RACCORD, TUYAU		1	1			
10	93210–07003	O-RING JOINT TORIQUE		1	1			
11	6CE–45321–20	PLATE PLAQUETTE		1	1			
12	93210–33M49	O-RING JOINT TORIQUE		1	1			
13	93106–10001	OIL SEAL JOINT SPY		1	1			
14	6KA–44150–00	SHIFT CAM ASSY CAME D'INVERSION		1	1			
15	99001–09600	CIRCLIP CIRCLIP		1	1			
16	6CE–44311–01	HOUSING, WATER PUMP CORPS, POMPE A EAU		1	1			
17	93104–22M07	OIL SEAL JOINT SPY		2	2			
18	6AW–44322–00	INSERT, CARTRIDGE CUVETTE		1	1			
19	93210–94003	O-RING JOINT TORIQUE		1	1			
20	93210–37160	O-RING JOINT TORIQUE		1	1			
21	6AW–44365–01	DAMPER, WATER SEAL 1 JOINT, TUBE D'EAU 1		1	1			
22	6AW–44312–00	COVER, WATER PUMP HOUSING COUVERCLE		2	2			
23	6CE–44352–00	IMPELLER TURBINE		1	1			
24	90280–04002	KEY, WOODRUFF CLAVETTE, DEMI-LUNE		1	1			
25	6CE–44323–01	OUTER PLATE, CARTRIDGE PLAQUE EXTERIEURE		1	1			

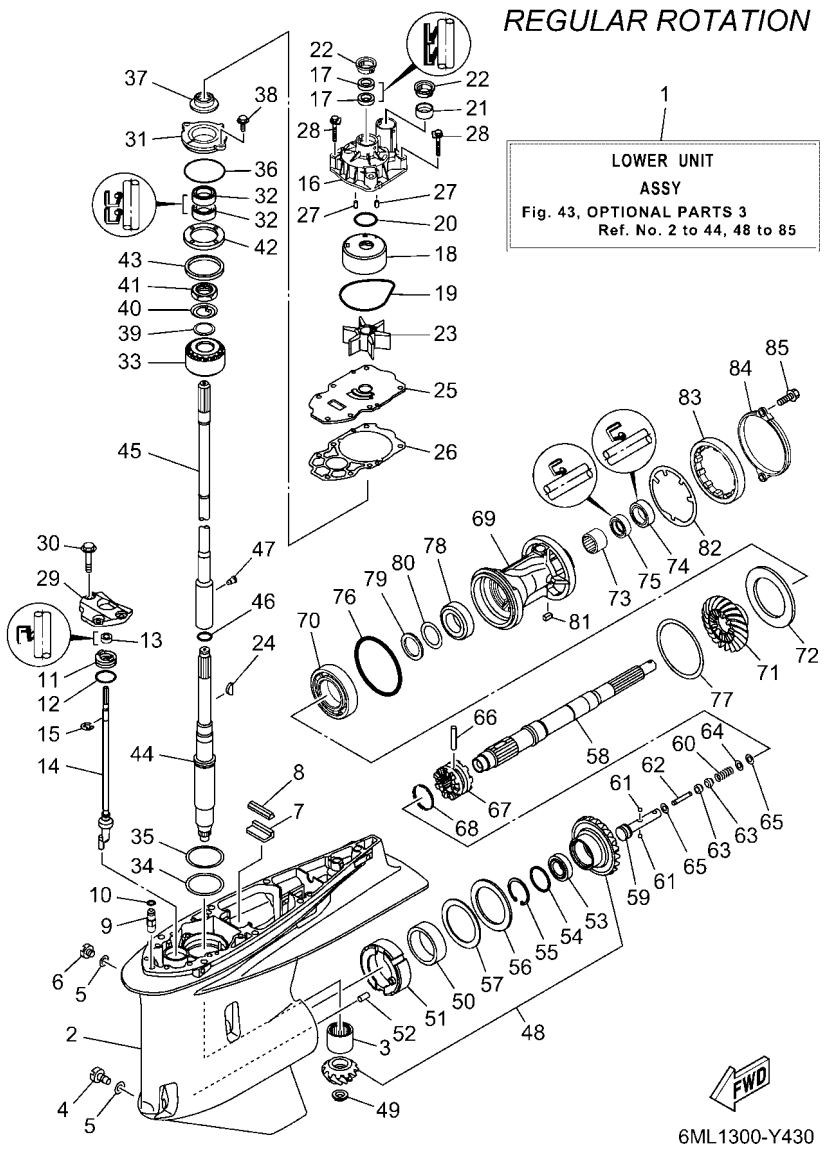

FIG. 43 OPTIONAL PARTS 3 — PIECES OPTIONNELLES 3

REF. NO.	PART NO. N° PIECES	DESCRIPTION DESCRIPTION	SA	NSA	NSA2	6MM1		REMARKS REMARQUES
26	6CE–44315–00	GASKET, WATER PUMP JOINT, POMPE A EAU		1	1			
27	93606–12019	PIN, DOWEL GOUPILLE		2	2			
28	90119–08191	BOLT, WITH WASHER BOULON, AVEC RONDELLE		4	4			
29	6CB–44312–00	COVER, WATER PUMP HOUSING COUVERCLE		1	1			
30	90119–08180	BOLT, WITH WASHER BOULON, AVEC RONDELLE		3	3			
31	6AW–45335–00–CA	HOUSING, OIL SEAL LOGEMENT DE JOINT SPY		1	1			
32	93101–28019	OIL SEAL JOINT SPY		2	2			
33	93399–99962	BEARING ROULEMENT		1	1			
34	90201–68008	WASHER, PLATE RONDELLE, PLATE		1	1			
35	6AW–45587–00	SHIM (T:0.10MM) CALE (T:0.10MM)		1	1			UR UR
	6AW–45587–10	SHIM (T:0.12MM) CALE (T:0.12MM)		1	1			UR UR
	6AW–45587–20	SHIM (T:0.15MM) CALE (T:0.15MM)		1	1			UR UR
	6AW–45587–30	SHIM (T:0.18MM) CALE (T:0.18MM)		1	1			UR UR
	6AW–45587–40	SHIM (T:0.30MM) CALE (T:0.30MM)		1	1			UR UR
	6AW–45587–50	SHIM (T:0.40MM) CALE (T:0.40MM)		1	1			UR UR
	6AW–45587–60	SHIM (T:0.50MM) CALE (T:0.50MM)		1	1			UR UR
36	93210–69MG6	O-RING JOINT TORIQUE		1	1			
37	6KA–45344–00	COVER, OIL SEAL FLASQE, JOINT D'HUILE		1	1			
38	97E95–08520	BOLT, HEXAGON W/W DEEP RECESS VIS HEXAGONAL AVC RONDELLE		2	2			
39	90201–301U7	WASHER, PLATE RONDELLE, PLATE		1	1			
40	90214–30003	WASHER, CLAW RONDELLE, A GRIFFES		1	1			
41	90170–30M18	NUT ECROU		1	1			
42	6AW–45244–00	NUT ECROU		1	1			
43	6T5–45539–00	SPACER 2 ENTRETOISE 2		1	1			
44	6KA–45501–00	DRIVE SHAFT COMP. ARBRE MOTEUR COMP.		1	1			
45	6KA–45802–00	INTERMEDI. DRIVE SHAFT COMP. INTERMEDI. ARBRE MOTEUR COMP		1	1			UR X(25.2") UR X(25.2")
	6KA–45802–10	INTERMEDI. DRIVE SHAFT COMP. INTERMEDI. ARBRE MOTEUR COMP		1	1			UR U(30.2") UR U(30.2")

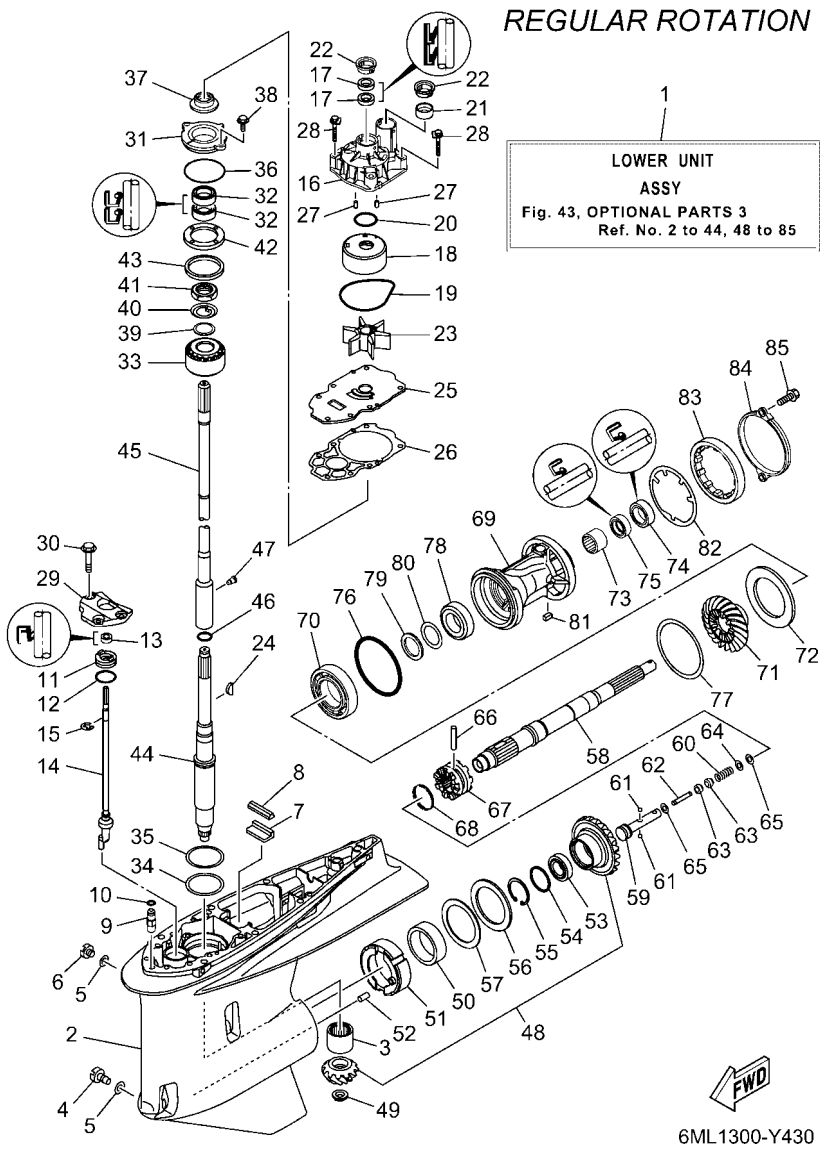

FIG. 43 OPTIONAL PARTS 3 — PIECES OPTIONNELLES 3

REF. NO.	PART NO. N° PIECES	DESCRIPTION DESCRIPTION	SA	NSA	NSA2	6MM1		REMARKS REMARQUES
45	6KA–45802–20	INTERMEDI. DRIVE SHAFT COMP. INTERMEDI. ARBRE MOTEUR COMP		1	1			UR E(35.2") UR E(35.2")
46	93210–22MF1	O-RING JOINT TORIQUE		1	1			
47	90149–05048	SCREW VIS		1	1			
48	6KA–45550–00	GEAR SET KIT, PIGNON		1	1			
49	90179–16017	NUT ECROU		1	1			
50	93311–85894	BEARING ROULEMENT		1	1			
51	6CB–45824–00	ADAPTER ADAPTATEUR		1	1			
52	93608–16M16	PIN, DOWEL AXE		1	1			
53	93332–000A4	BEARING ROULEMENT		1	1			
54	90201–41008	WASHER, PLATE RONDELLE, PLATE		1	1			
55	99009–47500	CIRCLIP CIRCLIP		1	1			
56	93340–67011	BEARING CERVEAUX DE DIRECTION		1	1			
57	6CB–45567–00	SHIM (T:2.00MM) CALE (T:2.00MM)		1	1			UR UR
	6CB–45567–10	SHIM (T:2.03MM) CALE (T:2.03MM)		1	1			UR UR
	6CB–45567–20	SHIM (T:2.06MM) CALE (T:2.06MM)		1	1			UR UR
	6CB–45567–30	SHIM (T:2.09MM) CALE (T:2.09MM)		1	1			UR UR
	6CB–45567–40	SHIM (T:2.12MM) CALE (T:2.12MM)		1	1			UR UR
	6CB–45567–50	SHIM (T:2.15MM) CALE (T:2.15MM)		1	1			UR UR
58	6CB–45611–00	SHAFT, PROPELLER ARBRE, HELICE		1	1			
59	6CB–45634–00	SLIDE, SHIFT CONTRE-POUSSOIR		1	1			
60	90501–10M77	SPRING, COMPRESSION RESSORT, COMPRESSION		1	1			
61	93501–04011	BALL BILLE		2	2			
62	6H1–45668–00	SHAFT, FREE 1 AXE 1		1	1			
63	61A–45635–00	PLUNGER, SHIFT POUSSOIR D'EMBRAYAGE		2	2			
64	90201–02M00	WASHER, PLATE RONDELLE, PLATE		1	1			
65	90183–02M03	NUT, SPRING ECROU, RESSORT		2	2			
66	90250–08M07	PIN, STRAIGHT GOUPILLE, DROITE		1	1			

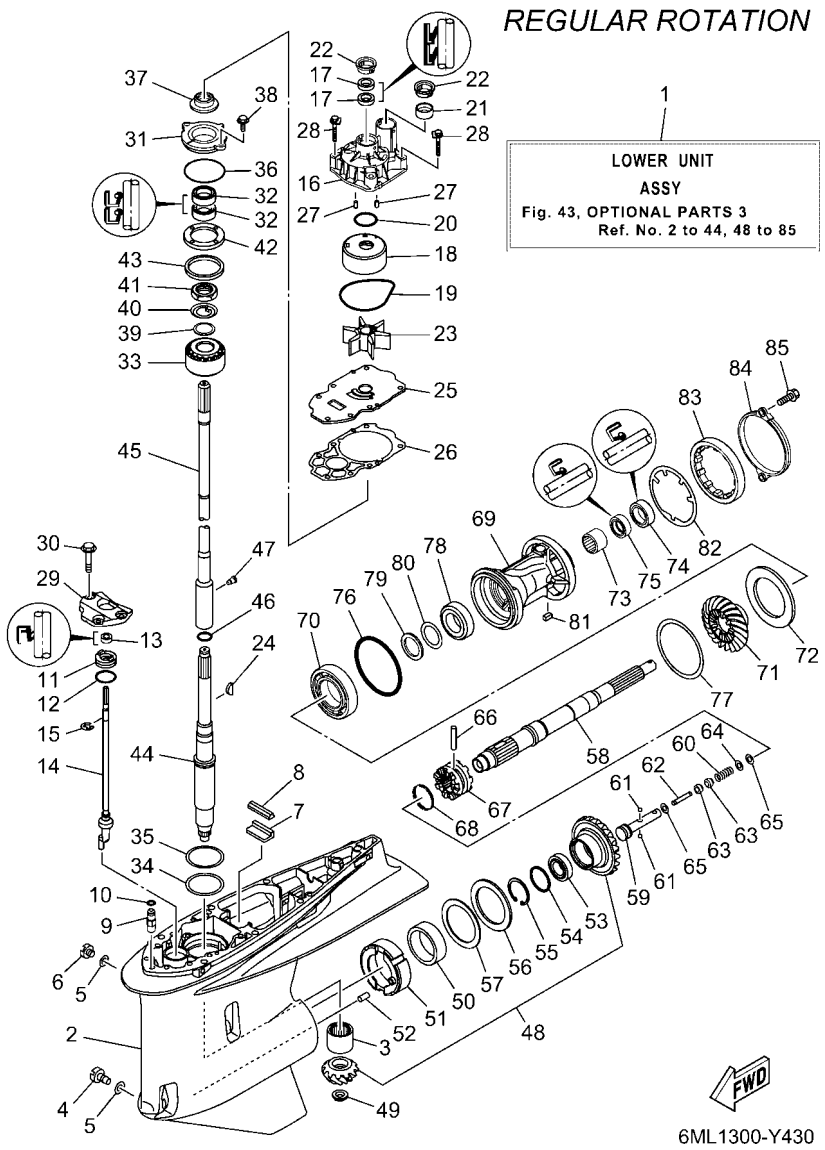

FIG. 43 OPTIONAL PARTS 3 — PIECES OPTIONNELLES 3

REF. NO.	PART NO. N° PIECES	DESCRIPTION DESCRIPTION	SA	NSA	NSA2	6MM1		REMARKS REMARQUES
67	6ML–45631–00	CLUTCH, DOG CRABOT		1	1			
68	6E5–45633–01	RING, CROSS PIN JONC, GOUPILLE CRABOT		1	1			
69	6CE–45332–00–CA	HOUSING, BEARING FLASQUE, ROULEMENT		1	1			
70	93306–209U0	BEARING ROULEMENT		1	1			
71	6KA–45571–00	GEAR 2 (21T) PIGNON 2 (21T)		1	1			
72	6CB–45576–00	WASHER, THRUST 2 RONDELLE DE CALAGE 2		1	1			
73	93315–43061	BEARING ROULEMENT		1	1			
74	93101–30030	OIL SEAL JOINT SPY		1	1			
75	93101–30019	OIL SEAL JOINT SPY		1	1			
76	93211–02001	O-RING JOINT TORIQUE		1	1			
77	6CB–45577–00	SHIM (T:0.10MM) CALE (T:0.10MM)		1	1			UR UR
	6CB–45577–10	SHIM (T:0.12MM) CALE (T:0.12MM)		1	1			UR UR
	6CB–45577–20	SHIM (T:0.15MM) CALE (T:0.15MM)		1	1			UR UR
	6CB–45577–30	SHIM (T:0.18MM) CALE (T:0.18MM)		1	1			UR UR
	6CB–45577–40	SHIM (T:0.30MM) CALE (T:0.30MM)		1	1			UR UR
	6CB–45577–50	SHIM (T:0.40MM) CALE (T:0.40MM)		1	1			UR UR
	6CB–45577–60	SHIM (T:0.50MM) CALE (T:0.50MM)		1	1			UR UR
78	93332–000A5	BEARING ROULEMENT		1	1			
79	90201–32008	WASHER, PLATE RONDELLE, PLATE		1	1			
80	676–45567–00	SHIM (T:0.7MM) CALE		1	1			UR UR
	676–45567–10	SHIM (T:0.8MM) CALE		1	1			UR UR
	676–45567–20	SHIM (T:0.9MM) CALE		1	1			UR UR
	676–45567–30	SHIM (T:1.0MM) CALE		1	1			UR UR
	676–45567–40	SHIM (T:1.1MM) CALE		1	1			UR UR
	676–45567–50	SHIM (T:1.2MM) CALE		1	1			UR UR
81	90282–05008	KEY, STRAIGHT CLAVETTE, DROITE		1	1			
82	6CB–45383–00	WASHER, CLAW FREIN D'ECROU		1	1			

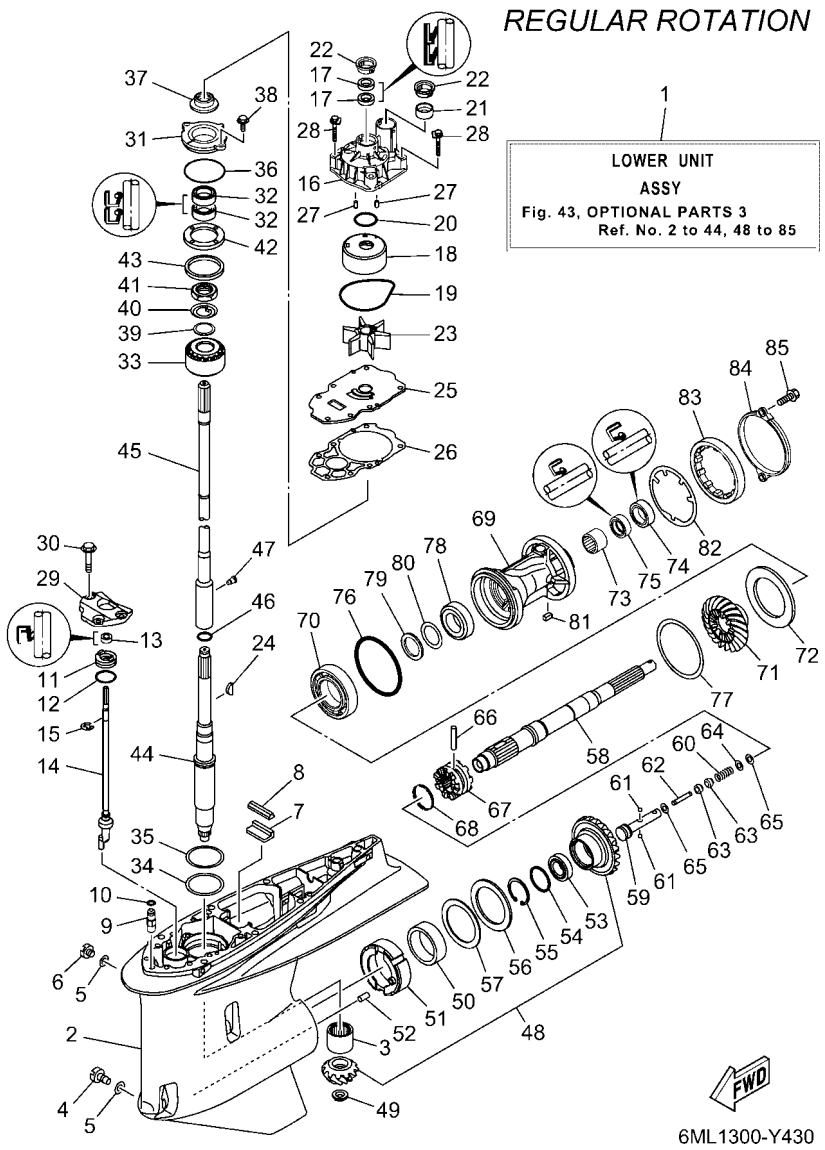

FIG. 43 OPTIONAL PARTS 3 — PIECES OPTIONNELLES 3

REF. NO.	PART NO. N° PIECES	DESCRIPTION DESCRIPTION	SA	NSA	NSA2	6MM1		REMARKS REMARQUES
83	6CB–45384–00	NUT ECROU		1	1			
84	6CE–45361–10	CAP, LOWER CASING COUVERCLE, BOITIER D'HELICE		1	1			
85	90105–08M61	BOLT, FLANGE BOULON, A COLLERETTE		2	2			

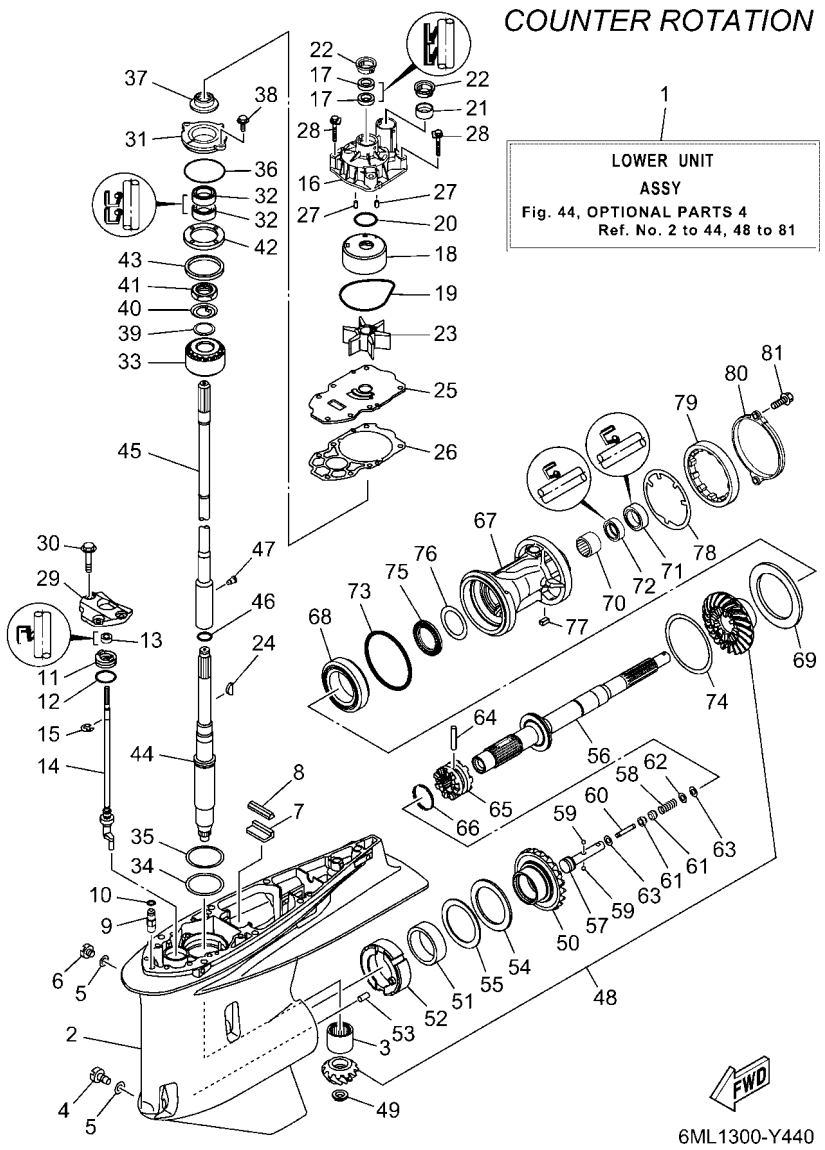

FIG. 44 OPTIONAL PARTS 4 — PIECES OPTIONNELLES 4

REF. NO.	PART NO. N° PIECES	DESCRIPTION DESCRIPTION	SA	NSA	NSA2	6MM1		REMARKS REMARQUES
1	6MM–45300–00–8D	LOWER UNIT ASSY UNITE INFERIEURE (ENS.)		1				GRAY, LH GRAY, LH
	6MM–45300–00–CE	LOWER UNIT ASSY UNITE INFERIEURE (ENS.)			1			WHITE, LH WHITE, LH
2	6KA–45301–00–8D	CASING, LOWER BEQUILLE		1				GRAY GRAY
	6KA–45301–00–CE	CASING, LOWER BEQUILLE			1			WHITE WHITE
3	93311–83280	BEARING ROULEMENT			1			
4	688–45341–10	PLUG, DRAIN BOUCHON DE VIDANGE			1			
5	90430–08003	GASKET JOINT			2			
6	90340–08002	PLUG, STRAIGHT SCREW PLOT, FILETE DROIT			1			
7	663–45376–00	GUIDE, SEAL DAMPER BUTEE, JOINT CAOUTCHOUC			1			
8	6CE–45375–00	DAMPER, SEAL BOURRELET, CAOUTCHOUC			1			
9	63P–45378–00	NIPPLE, HOSE RACCORD, TUYAU			1			
10	93210–07003	O-RING JOINT TORIQUE			1			
11	6CE–45321–20	PLATE PLAQUETTE			1			
12	93210–33M49	O-RING JOINT TORIQUE			1			
13	93106–10001	OIL SEAL JOINT SPY			1			
14	6KB–44150–00	SHIFT CAM ASSY CAME D'INVERSION			1			
15	99001–09600	CIRCLIP CIRCLIP			1			
16	6CE–44311–01	HOUSING, WATER PUMP CORPS, POMPE A EAU			1			
17	93104–22M07	OIL SEAL JOINT SPY			2			
18	6AW–44322–00	INSERT, CARTRIDGE CUVETTE			1			
19	93210–94003	O-RING JOINT TORIQUE			1			
20	93210–37160	O-RING JOINT TORIQUE			1			
21	6AW–44365–01	DAMPER, WATER SEAL 1 JOINT, TUBE D'EAU 1			1			
22	6AW–44312–00	COVER, WATER PUMP HOUSING COUVERCLE			2			
23	6CE–44352–00	IMPELLER TURBINE			1			
24	90280–04002	KEY, WOODRUFF CLAVETTE, DEMI-LUNE			1			
25	6CE–44323–01	OUTER PLATE, CARTRIDGE PLAQUE EXTERIEURE			1			

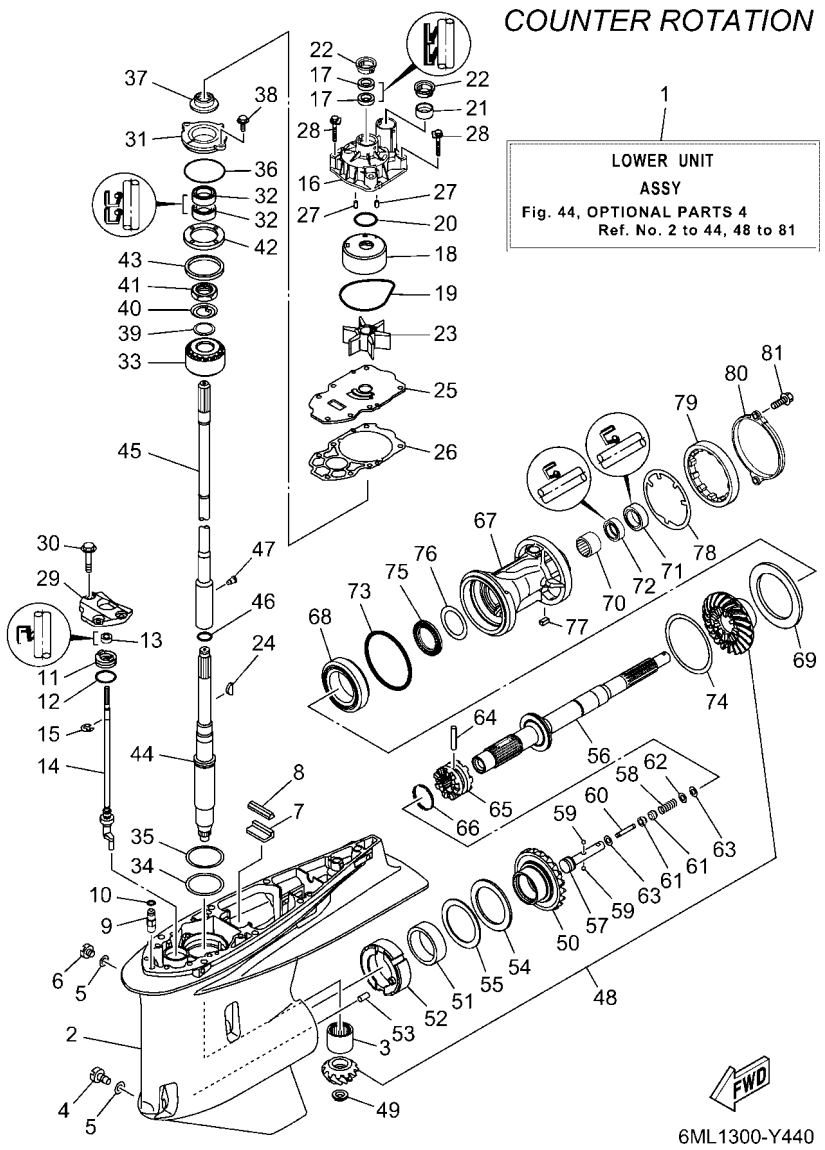

FIG. 44 OPTIONAL PARTS 4 — PIECES OPTIONNELLES 4

REF. NO.	PART NO. N° PIECES	DESCRIPTION DESCRIPTION	SA	NSA	NSA2	6MM1		REMARKS REMARQUES
26	6CE–44315–00	GASKET, WATER PUMP JOINT, POMPE A EAU			1			
27	93606–12019	PIN, DOWEL GOUPILLE			2			
28	90119–08191	BOLT, WITH WASHER BOULON, AVEC RONDELLE			4			
29	6CB–44312–00	COVER, WATER PUMP HOUSING COUVERCLE			1			
30	90119–08180	BOLT, WITH WASHER BOULON, AVEC RONDELLE			3			
31	6AW–45335–00–CA	HOUSING, OIL SEAL LOGEMENT DE JOINT SPY			1			
32	93101–28019	OIL SEAL JOINT SPY			2			
33	93399–99962	BEARING ROULEMENT			1			
34	90201–68008	WASHER, PLATE RONDELLE, PLATE			1			
35	6AW–45587–00	SHIM (T:0.10MM) CALE (T:0.10MM)			1			UR UR
	6AW–45587–10	SHIM (T:0.12MM) CALE (T:0.12MM)			1			UR UR
	6AW–45587–20	SHIM (T:0.15MM) CALE (T:0.15MM)			1			UR UR
	6AW–45587–30	SHIM (T:0.18MM) CALE (T:0.18MM)			1			UR UR
	6AW–45587–40	SHIM (T:0.30MM) CALE (T:0.30MM)			1			UR UR
	6AW–45587–50	SHIM (T:0.40MM) CALE (T:0.40MM)			1			UR UR
	6AW–45587–60	SHIM (T:0.50MM) CALE (T:0.50MM)			1			UR UR
36	93210–69MG6	O-RING JOINT TORIQUE			1			
37	6KA–45344–00	COVER, OIL SEAL FLASQE, JOINT D'HUILE			1			
38	97E95–08520	BOLT, HEXAGON W/W DEEP RECESS VIS HEXAGONAL AVC RONDELLE			2			
39	90201–301U7	WASHER, PLATE RONDELLE, PLATE			1			
40	90214–30003	WASHER, CLAW RONDELLE, A GRIFFES			1			
41	90170–30M18	NUT ECROU			1			
42	6AW–45244–00	NUT ECROU			1			
43	6T5–45539–00	SPACER 2 ENTRETOISE 2			1			
44	6KA–45501–00	DRIVE SHAFT COMP. ARBRE MOTEUR COMP.			1			
45	6KA–45802–00	INTERMEDI. DRIVE SHAFT COMP. INTERMEDI. ARBRE MOTEUR COMP			1			UR X(25.2") UR X(25.2")
	6KA–45802–10	INTERMEDI. DRIVE SHAFT COMP. INTERMEDI. ARBRE MOTEUR COMP			1			UR U(30.2") UR U(30.2")

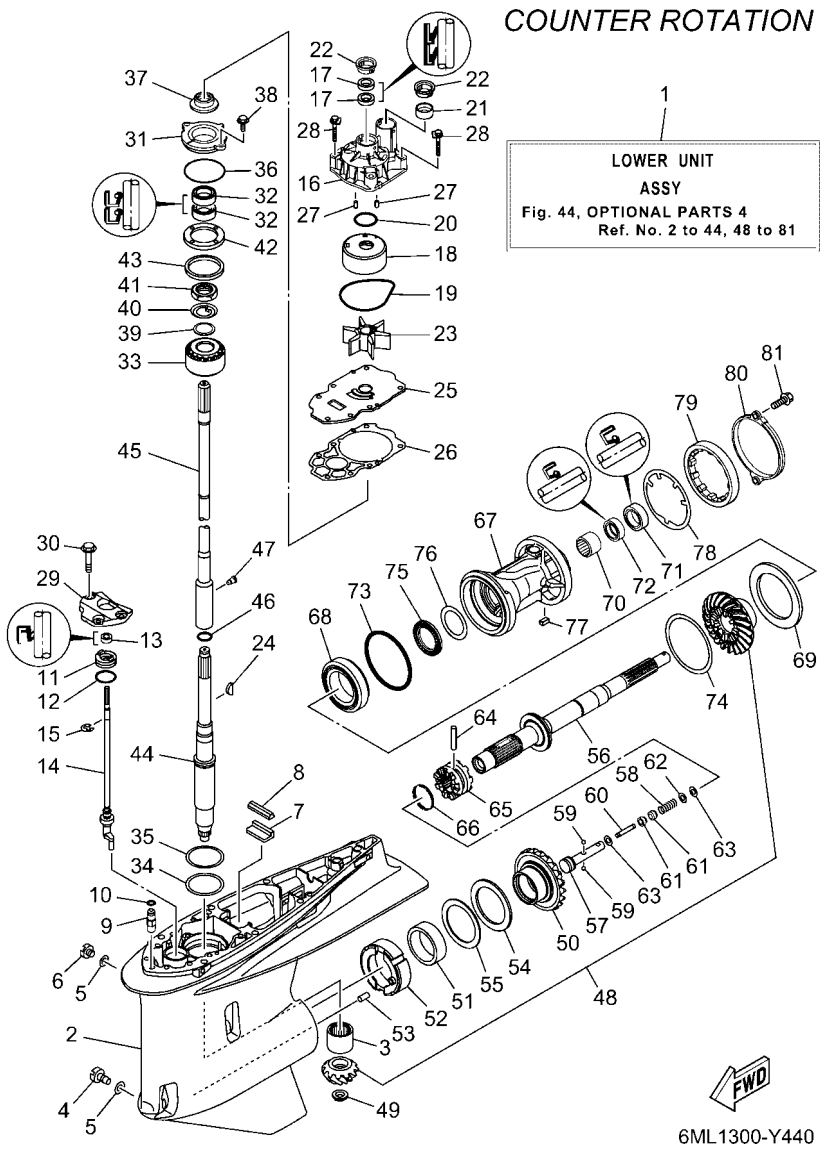

FIG. 44 OPTIONAL PARTS 4 — PIECES OPTIONNELLES 4

REF. NO.	PART NO. N° PIECES	DESCRIPTION DESCRIPTION	SA	NSA	NSA2	6MM1		REMARKS REMARQUES
45	6KA–45802–20	INTERMEDI. DRIVE SHAFT COMP. INTERMEDI. ARBRE MOTEUR COMP			1			UR E(35.2") UR E(35.2")
46	93210–22MF1	O-RING JOINT TORIQUE			1			
47	90149–05048	SCREW VIS			1			
48	6KB–45550–00	GEAR SET KIT, PIGNON			1			
49	90179–16017	NUT ECROU			1			
50	6KB–45560–00	GEAR 1 (21T) PIGNON 1 (21T)			1			
51	93311–85894	BEARING ROULEMENT			1			
52	6CB–45824–00	ADAPTER ADAPTATEUR			1			
53	93608–16M16	PIN, DOWEL AXE			1			
54	93340–67011	BEARING CERVEAUX DE DIRECTION			1			
55	6CB–45567–00	SHIM (T:2.00MM) CALE (T:2.00MM)			1			UR UR
	6CB–45567–10	SHIM (T:2.03MM) CALE (T:2.03MM)			1			UR UR
	6CB–45567–20	SHIM (T:2.06MM) CALE (T:2.06MM)			1			UR UR
	6CB–45567–30	SHIM (T:2.09MM) CALE (T:2.09MM)			1			UR UR
	6CB–45567–40	SHIM (T:2.12MM) CALE (T:2.12MM)			1			UR UR
	6CB–45567–50	SHIM (T:2.15MM) CALE (T:2.15MM)			1			UR UR
56	6KB–45611–00	SHAFT, PROPELLER ARBRE, HELICE			1			
57	6CB–45634–00	SLIDE, SHIFT CONTRE-POUSSOIR			1			
58	90501–10M77	SPRING, COMPRESSION RESSORT, COMPRESSION			1			
59	93501–04011	BALL BILLE			2			
60	6H1–45668–00	SHAFT, FREE 1 AXE 1			1			
61	61A–45635–00	PLUNGER, SHIFT POUSSOIR D'EMBRAYAGE			2			
62	90201–02M00	WASHER, PLATE RONDELLE, PLATE			1			
63	90183–02M03	NUT, SPRING ECROU, RESSORT			2			
64	90250–08M07	PIN, STRAIGHT GOUPILLE, DROITE			1			
65	6ML–45631–00	CLUTCH, DOG CRABOT			1			
66	6E5–45633–01	RING, CROSS PIN JONC, GOUPILLE CRABOT			1			

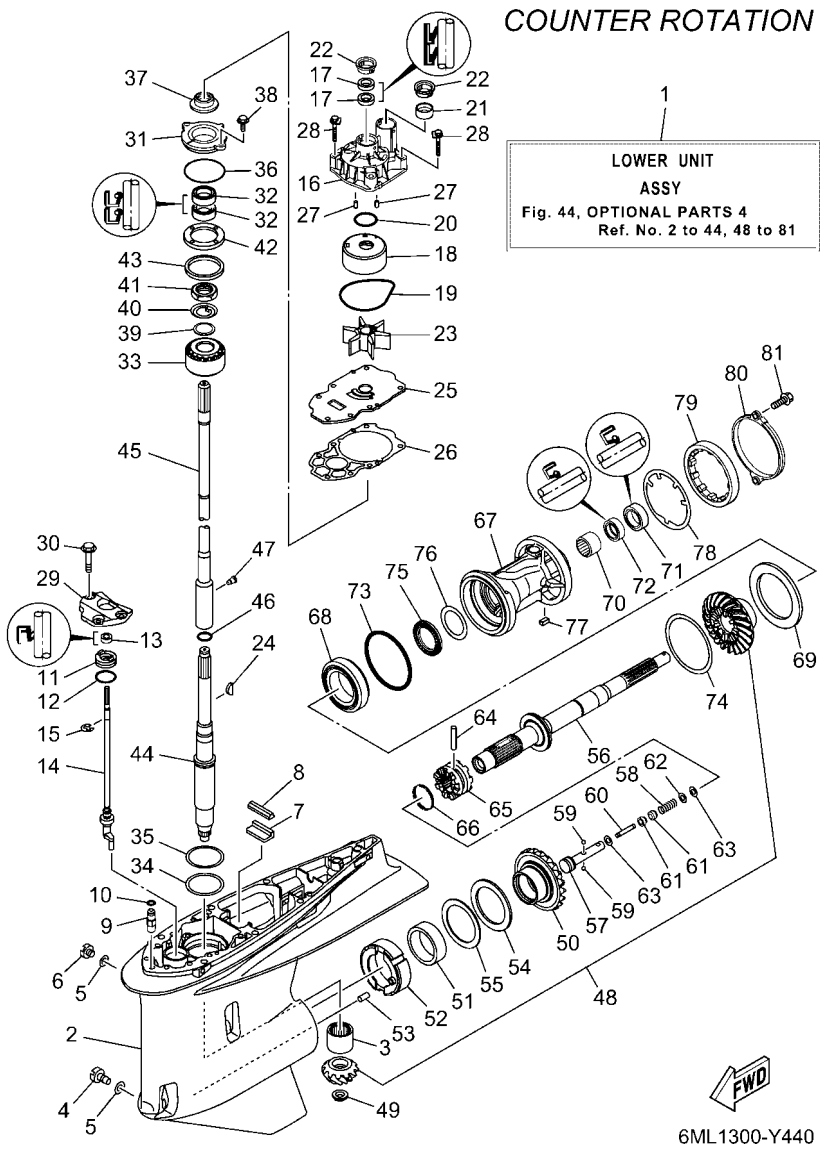

FIG. 44 OPTIONAL PARTS 4 — PIECES OPTIONNELLES 4

REF. NO.	PART NO. N° PIECES	DESCRIPTION DESCRIPTION	SA	NSA	NSA2	6MM1		REMARKS REMARQUES
67	6CF–45332–01–CA	HOUSING, BEARING FLASQUE, ROULEMENT			1			
68	93332–00048	BEARING ROULEMENT			1			
69	6CF–45576–00	WASHER, THRUST 2 RONDELLE DE CALAGE 2			1			
70	93315–43061	BEARING ROULEMENT			1			
71	93101–30030	OIL SEAL JOINT SPY			1			
72	93101–30019	OIL SEAL JOINT SPY			1			
73	93211–02001	O-RING JOINT TORIQUE			1			
74	6CB–45577–00	SHIM (T:0.10MM) CALE (T:0.10MM)			1			UR UR
	6CB–45577–10	SHIM (T:0.12MM) CALE (T:0.12MM)			1			UR UR
	6CB–45577–20	SHIM (T:0.15MM) CALE (T:0.15MM)			1			UR UR
	6CB–45577–30	SHIM (T:0.18MM) CALE (T:0.18MM)			1			UR UR
	6CB–45577–40	SHIM (T:0.30MM) CALE (T:0.30MM)			1			UR UR
	6CB–45577–50	SHIM (T:0.40MM) CALE (T:0.40MM)			1			UR UR
	6CB–45577–60	SHIM (T:0.50MM) CALE (T:0.50MM)			1			UR UR
75	93341–440U5	BEARING CERVEAUX DE DIRECTION			1			
76	6K1–45578–01	SHIM (T:0.10MM) CALE (T:0.10MM)			1			UR UR
	6K1–45578–10	SHIM (T:0.12MM) CALE (T:0.12MM)			1			UR UR
	6K1–45578–20	SHIM (T:0.15MM) CALE (T:0.15MM)			1			UR UR
	6K1–45578–30	SHIM (T:0.18MM) CALE (T:0.18MM)			1			UR UR
	6K1–45578–40	SHIM (T:0.30MM) CALE (T:0.30MM)			1			UR UR
	6K1–45578–50	SHIM (T:0.40MM) CALE (T:0.40MM)			1			UR UR
	6K1–45578–60	SHIM (T:0.50MM) CALE (T:0.50MM)			1			UR UR
77	90282–05008	KEY, STRAIGHT CLAVETTE, DROITE			1			
78	6CB–45383–00	WASHER, CLAW FREIN D'ECROU			1			
79	6CB–45384–00	NUT ECROU			1			
80	6CE–45361–10	CAP, LOWER CASING COUVERCLE, BOITIER D'HELICE			1			
81	90105–08M61	BOLT, FLANGE BOULON, A COLLERETTE			2			

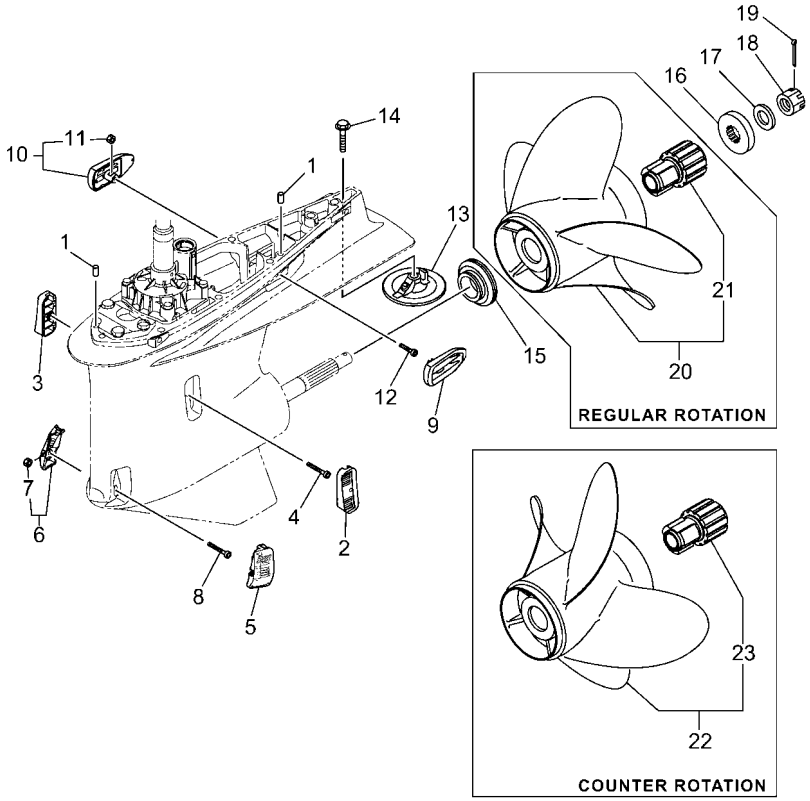

FIG. 45 OPTIONAL PARTS 5 — PIECES OPTIONNELLES 5

REF. NO.	PART NO. N° PIECES	DESCRIPTION DESCRIPTION	SA	NSA	NSA2	6MM1		REMARKS REMARQUES
1	93608–16M16	PIN, DOWEL AXE		2	2			
2	6KA–45214–00	COVER, WATER INLET 1 GRILLE, ENTREE D'EAU 1		1	1			
3	6KA–45215–00	COVER, WATER INLET 2 GRILLE, ENTREE D'EAU 2		1	1			
4	90110–05039	BOLT, HEXAGON SOCKET HEAD BOULON, TETE HEXAGONALE CREUSE		1	1			
5	6CE–45224–00	COVER, WATER INLET 3 GRILLE, ENTREE D'EAU 3		1	1			
6	6CE–45225–00	COVER, WATER INLET 4 GRILLE, ENTREE D'EAU 4		1	1			
7	90185–05002	.NUT, NYLON .ECROU,AUTO-BLOQUANT		1	1			
8	90110–05039	BOLT, HEXAGON SOCKET HEAD BOULON, TETE HEXAGONALE CREUSE		1	1			
9	6KA–45254–00	COVER, OUTLET 1 COUVERCLE, SORTIE 1		1	1			
10	6KA–45255–00	COVER, OUTLET 2 COUVERCLE, SORTIE 2		1	1			
11	90185–05002	.NUT, NYLON .ECROU,AUTO-BLOQUANT		1	1			
12	91380–05020	BOLT BOULON		1	1			
13	6CE–45373–00	ANODE ANODE		1	1			
14	90105–10M00	BOLT, FLANGE BOULON, A COLLERETTE		1	1			
15	69J–45987–00	SPACER 1 ENTRETOISE 1		1	1			
16	688–45997–01	SPACER 2 ENTRETOISE 2		1	1			
17	92990–18200	WASHER RONDELLE, PLATE		1	1			
18	90171–18M04	NUT, CASTLE ECROU, CRENELE		1	1			
19	91490–40030	PIN. COTTER GOUPILLE		1	1			
20	6ML–45B76–00	PROPELLER (4X15"X20"-T) HELICE (4X15"X20"-T)		1	1			UR RH UR RH
	6ML–45B78–00	PROPELLER (4X15"X21"-T) HELICE (4X15"X21"-T)		1	1			UR RH UR RH
	6ML–45B80–00	PROPELLER (4X15"X22"-T) HELICE (4X15"X22"-T)		1	1			UR RH UR RH
	6ML–45B82–00	PROPELLER (4X15"X23"-T) HELICE (4X15"X23"-T)		1	1			UR RH UR RH
	6ML–45B84–00	PROPELLER (4X15"X24"-T) HELICE (4X15"X24"-T)		1	1			UR RH UR RH
	6ML–45B86–00	PROPELLER (4X15"X25"-T) HELICE (4X15"X25"-T)		1	1			UR RH UR RH
21	6CE–45C81–10	.DAMPER RUBBER, PROPELLER 1 .AMORTISSEUR HELICE 1		1	1			
22	6MM–45B76–00	PROPELLER (4X15"X20"-TL) HELICE (4X15"X20"-TL)		1	1			UR LH UR LH

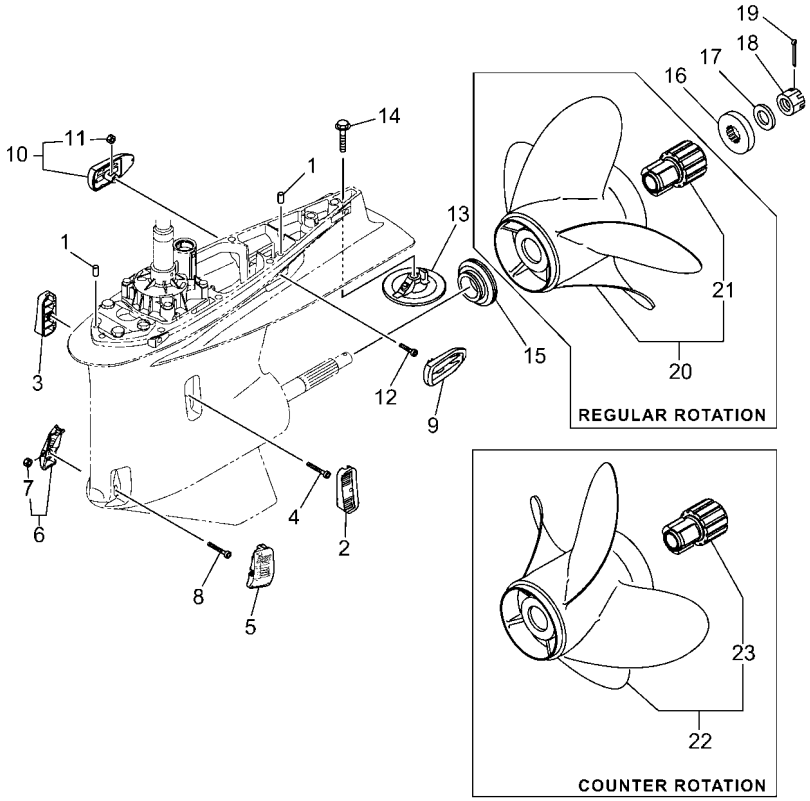

6ML1100-Y430

FIG. 45 OPTIONAL PARTS 5 — PIECES OPTIONNELLES 5

REF. NO.	PART NO. N° PIECES	DESCRIPTION DESCRIPTION	SA	NSA	NSA2	6MM1		REMARKS REMARQUES
22	6MM–45B78–00	PROPELLER (4X15"X21"-TL) HELICE (4X15"X21"-TL)		1	1			UR LH UR LH
	6MM–45B80–00	PROPELLER (4X15"X22"-TL) HELICE (4X15"X22"-TL)		1	1			UR LH UR LH
	6MM–45B82–00	PROPELLER (4X15"X23"-TL) HELICE (4X15"X23"-TL)		1	1			UR LH UR LH
	6MM–45B84–00	PROPELLER (4X15"X24"-TL) HELICE (4X15"X24"-TL)		1	1			UR LH UR LH
	6MM–45B86–00	PROPELLER (4X15"X25"-TL) HELICE (4X15"X25"-TL)		1	1			UR LH UR LH
23	6CE–45C81–10	.DAMPER RUBBER, PROPELLER 1 .AMORTISSEUR HELICE 1		1	1			

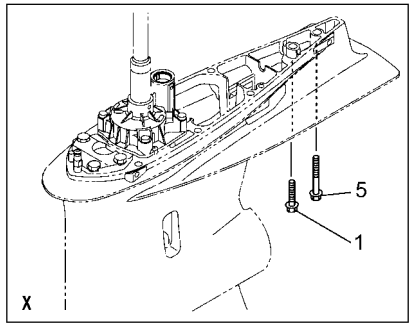

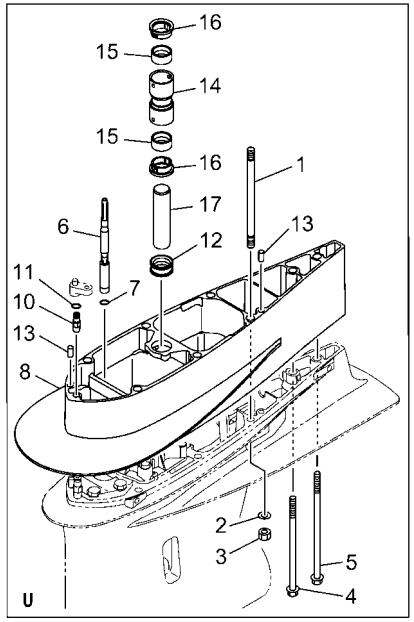

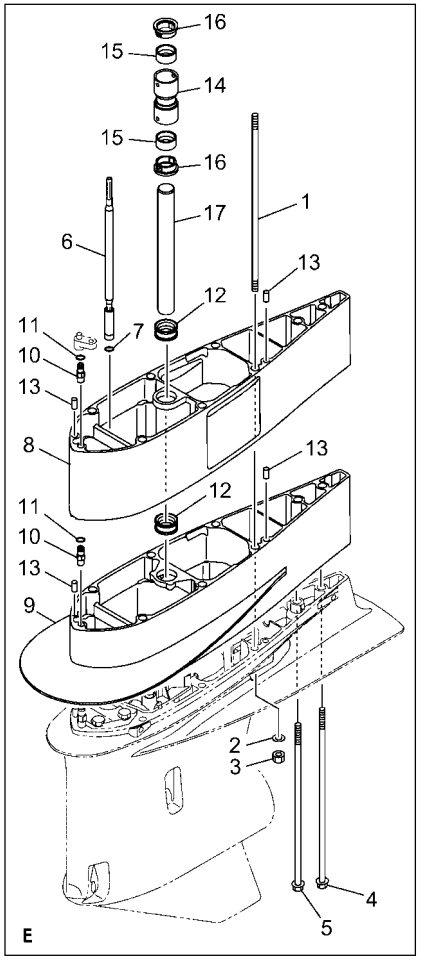

6ML1100-Y440

FIG. 46 OPTIONAL PARTS 6 — PIECES OPTIONNELLES 6

REF. NO.	PART NO. N° PIECES	DESCRIPTION DESCRIPTION	SA	NSA	NSA2	6MM1		REMARKS REMARQUES
1	90119–10024	BOLT, WITH WASHER BOULON, AVEC RONDELLE		7	7			UR X(25.2") UR X(25.2")
	90116–10067	BOLT, STUD GOUJON		6	6			UR U(30.2") UR U(30.2")
	90116–10066	BOLT, STUD GOUJON		6	6			UR E(35.2") UR E(35.2")
2	92995–10600	WASHER RONDELLE		6	6			U(30.2"),E(35.2") U(30.2"),E(35.2")
3	95380–10600	NUT ECROU		6	6			U(30.2"),E(35.2") U(30.2"),E(35.2")
4	90119–10009	BOLT, WITH WASHER BOULON, AVEC RONDELLE		1	1			UR U(30.2") UR U(30.2")
	90119–10061	BOLT, WITH WASHER BOULON, AVEC RONDELLE		1	1			UR E(35.2") UR E(35.2")
5	97E75–10570	BOLT, HEXAGON W/W DEEP RECESS VIS HEXAGONAL AVC RONDELLE		1	1			UR X(25.2") UR X(25.2")
	90119–10008	BOLT, WITH WASHER BOULON, AVEC RONDELLE		1	1			UR U(30.2") UR U(30.2")
	90119–10060	BOLT, WITH WASHER BOULON, AVEC RONDELLE		1	1			UR E(35.2") UR E(35.2")
6	6KA–44190–00	JT. SHIFT ROD COMP. JOINT, TRINGLE DE SELECTEUR CO		1	1			UR U(30.2") UR U(30.2")
	6KA–44190–10	JT. SHIFT ROD COMP. JOINT, TRINGLE DE SELECTEUR CO		1	1			UR E(35.2") UR E(35.2")
7	93210–09165	O-RING JOINT TORIQUE		1	1			U(30.2"),E(35.2") U(30.2"),E(35.2")
8	6KA–45211–00–8D	EXTENSION EXTENSION		1				GRAY, U(30.2") GRAY, U(30.2")
	6KA–45211–00–CE	EXTENSION EXTENSION			1			WHITE, U(30.2") WHITE, U(30.2")
	6CE–45211–10–8D	EXTENSION EXTENSION		1				GRAY, E(35.2") GRAY, E(35.2")
	6CE–45211–10–CE	EXTENSION EXTENSION			1			WHITE, E(35.2") WHITE, E(35.2")
9	6KA–45211–00–8D	EXTENSION EXTENSION		1				GRAY, E(35.2") GRAY, E(35.2")
	6KA–45211–00–CE	EXTENSION EXTENSION			1			WHITE, E(35.2") WHITE, E(35.2")
10	63P–45378–00	NIPPLE, HOSE RACCORD, TUYAU		1	1			UR U(30.2") UR U(30.2")
	63P–45378–00	NIPPLE, HOSE RACCORD, TUYAU		2	2			UR E(35.2") UR E(35.2")
11	93210–07003	O-RING JOINT TORIQUE		1	1			UR U(30.2") UR U(30.2")
	93210–07003	O-RING JOINT TORIQUE		2	2			UR E(35.2") UR E(35.2")
12	6AW–44366–01	DAMPER, WATER SEAL 2 JOINT, TUBE D'EAU 2		1	1			UR U(30.2") UR U(30.2")
	6AW–44366–01	DAMPER, WATER SEAL 2 JOINT, TUBE D'EAU 2		2	2			UR E(35.2") UR E(35.2")
13	93608–16M16	PIN, DOWEL AXE		2	2			UR U(30.2") UR U(30.2")
	93608–16M16	PIN, DOWEL AXE		4	4			UR E(35.2") UR E(35.2")

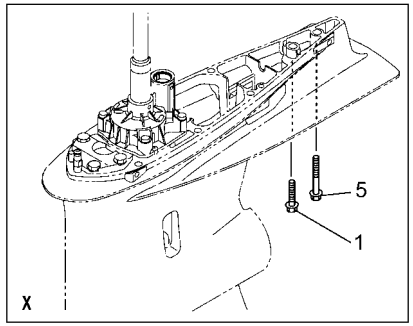

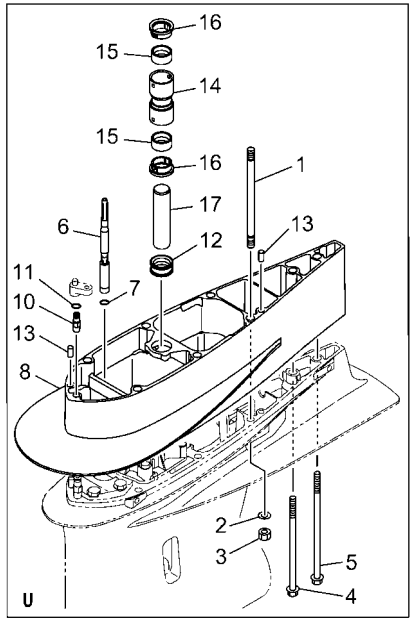

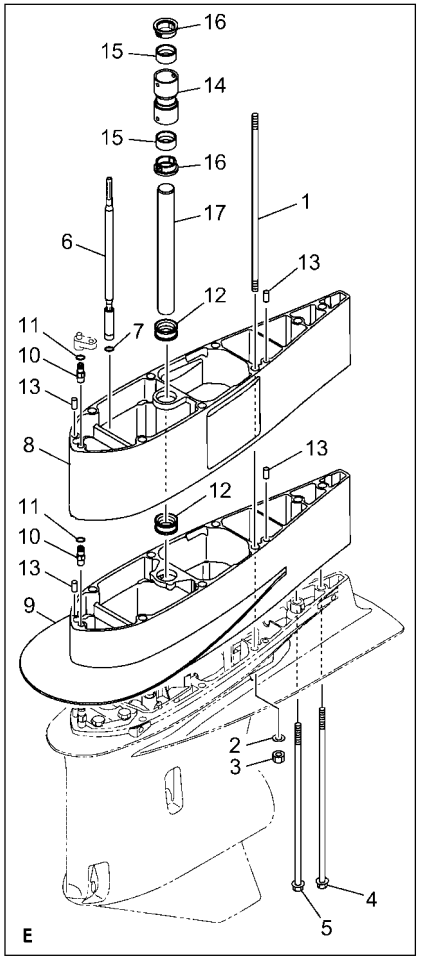

6ML1100-Y440

FIG. 46 OPTIONAL PARTS 6 — PIECES OPTIONNELLES 6

REF. NO.	PART NO. N° PIECES	DESCRIPTION DESCRIPTION	SA	NSA	NSA2	6MM1		REMARKS REMARQUES
14	6CE–44362–00	TUBE, WATER 2 TUBE D'EAU 2		1	1			U(30.2"),E(35.2") U(30.2"),E(35.2")
15	6AW–44365–01	DAMPER, WATER SEAL 1 JOINT, TUBE D'EAU 1		2	2			U(30.2"),E(35.2") U(30.2"),E(35.2")
16	6AW–44312–00	COVER, WATER PUMP HOUSING COUVERCLE		2	2			U(30.2"),E(35.2") U(30.2"),E(35.2")
17	6AW–44363–00	TUBE, WATER 3 TUBE D'EAU 3		1	1			UR U(30.2") UR U(30.2")
	6CE–44363–00	TUBE, WATER 3 TUBE D'EAU 3		1	1			UR E(35.2") UR E(35.2")

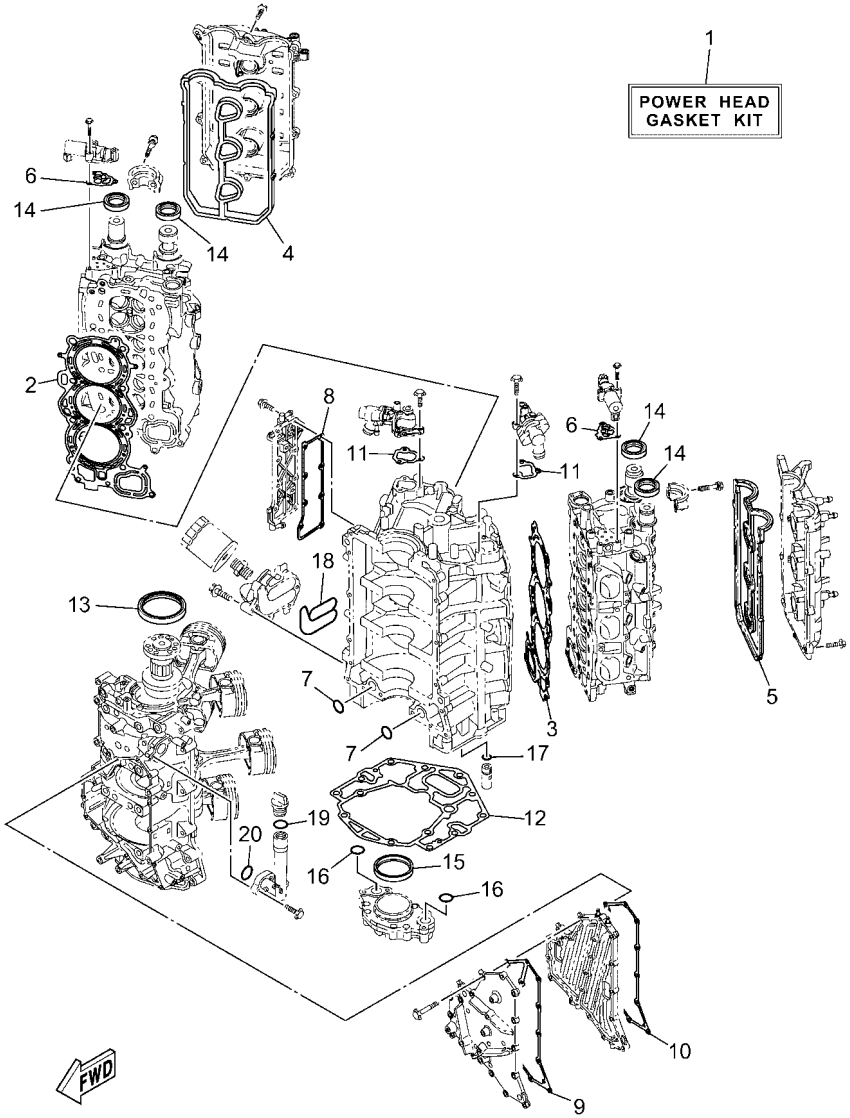

6ML1100-Y450

FIG. 47 REPAIR KIT 1 — KITS DE REPARATION 1

REF. NO.	PART NO. N° PIECES	DESCRIPTION DESCRIPTION	SA	NSA	NSA2	6MM1		REMARKS REMARQUES
1	6ML–W0001–00	POWER HEAD GASKET KIT POCHETTE DE JINTS TETE MOTRICE	1	1	1	1		
2	6ML–11181–00	.GASKET, CYLINDER HEAD 1 .JOINT, DE CULASSE 1	1	1	1	1		
3	6ML–11182–00	.GASKET, CYLINDER HEAD 2 .JOINT, CULASSE 2	1	1	1	1		
4	6CB–11193–00	.GASKET, HEAD COVER 1 .JOINT, COUVERCLE DE CULASSE 1	1	1	1	1		
5	6CB–11194–00	.GASKET, HEAD COVER 2 .JOINT, COUVERCLE DE CULASSE 2	1	1	1	1		
6	6CB–1242F–00	.GASKET, FILTER .JOINT, FILTRE	2	2	2	2		
7	93210–26658	.O-RING .JOINT TORIQUE	2	2	2	2		
8	6ML–1131B–00	.GASKET, COVER .JOINT, COUVERCLE	1	1	1	1		
9	6ML–15451–00	.GASKET, CRANKCASE COVER 1 .JOINT, COUVERCLE DE CARTER 1	1	1	1	1		
10	6ML–15461–00	.GASKET, CRANKCASE COVER 2 .JOINT, COUVERCLE DE CARTER 2	1	1	1	1		
11	6CB–12427–11	.GASKET, HOUSING COVER 1 .JOINT, COUVERCLE DE CARTER 1	2	2	2	2		
12	6KA–11351–00	.GASKET, CYLINDER .JOINT, D'EMBASE	1	1	1	1		
13	93102–85008	.OIL SEAL .JOINT SPY	1	1	1	1		
14	93102–38008	.OIL SEAL .JOINT SPY	4	4	4	4		
15	6CB–11355–00	.SEAL, CYLINDER 1 .JOINT, SPY CYLINDRE	1	1	1	1		
16	93210–26658	.O-RING .JOINT TORIQUE	2	2	2	2		
17	6CB–13473–00	.O-RING .JOINT TORIQUE	1	1	1	1		
18	6CB–13477–00	.GASKET .JOINT	1	1	1	1		
19	93210–24M79	.O-RING .JOINT TORIQUE	1	1	1	1		
20	93210–27370	.O-RING .JOINT TORIQUE	1	1	1	1		

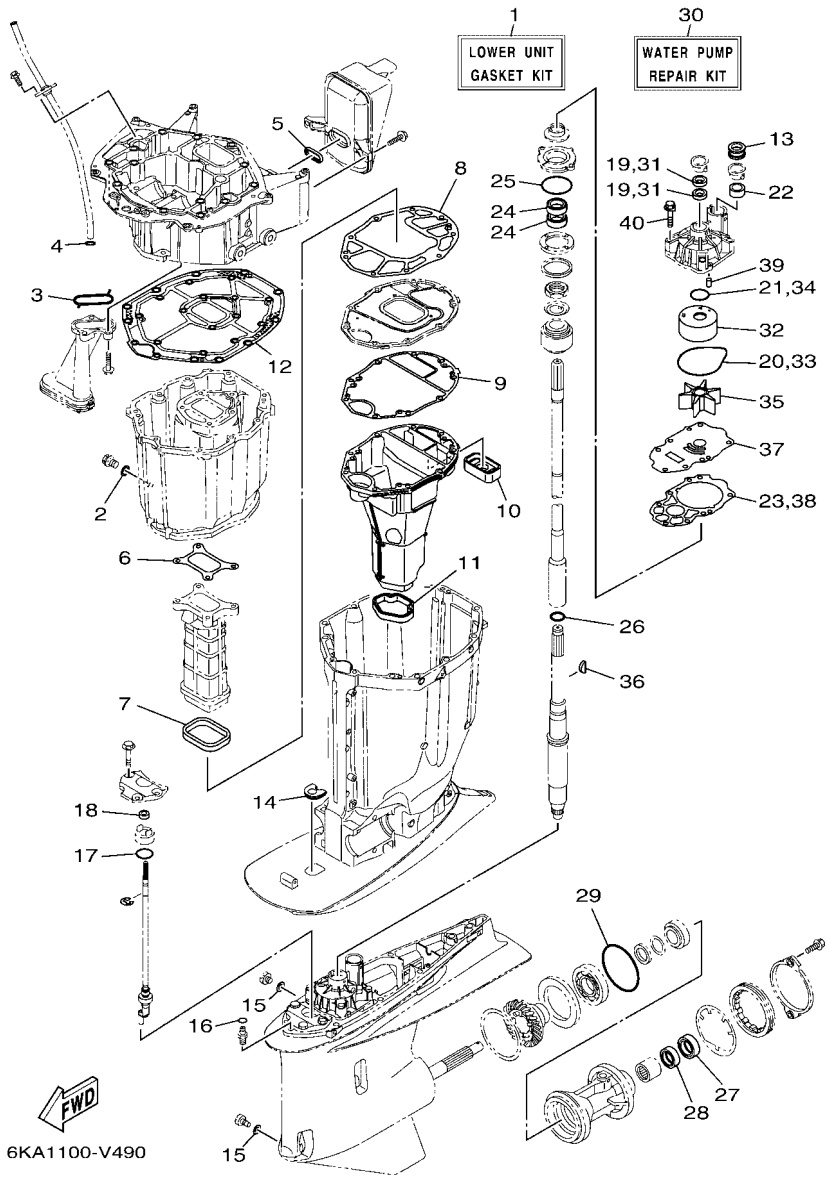

FIG. 48 REPAIR KIT 2 — KITS DE REPARATION 2

REF. NO.	PART NO. N° PIECES	DESCRIPTION DESCRIPTION	SA	NSA	NSA2	6MM1		REMARKS REMARQUES
1	6KA–W0001–20	LOWER UNIT GASKET KIT POCHETTE DE JOINTS EMBASE	1	1	1	1		
2	90430–14M09	.GASKET .JOINT	1	1	1	1		
3	6AW–13415–00	.SEAL, OIL STRAINER .JOINT, FILTRE A HUILE	1	1	1	1		
4	93210–19MJ3	.O-RING .JOINT TORIQUE	1	1	1	1		
5	6CB–14755–01	.GASKET, SILENCER .JOINT, SILENCIEUX	1	1	1	1		
6	6CB–41134–00	.GASKET, EXHAUST MANIFOLD .JOINT, PIPE D'ECHAPPEMENT	1	1	1	1		
7	6CB–41138–00	.SEAL, EXT. 1 .JOINT DE GROUPE 1	1	1	1	1		
8	6CB–41135–00	.GASKET, EXHAUST MANIFOLD .JOINT, PIPE D'ECHAPPEMENT	1	1	1	1		
9	6CE–41136–00	.GASKET, EXHAUST MANIFOLD 4 .JOINT, PIPE D'ECHAPPEMENT 4	1	1	1	1		
10	6CE–45127–00	.SEAL .JOINT	1	1	1	1		
11	6CE–45123–00	.GASKET, MUFFLER .JOINT, POT DE DETENTE	1	1	1	1		
12	6CB–45113–10	.GASKET, UPPER CASING .JOINT, TUBE D'ARBRE	1	1	1	1		
13	6AW–44366–01	.DAMPER, WATER SEAL 2 .JOINT, TUBE D'EAU 2	1	1	1	1		
14	6KA–44521–00	.SEAL .JOINT	1	1	1	1		
15	90430–08003	.GASKET .JOINT	2	2	2	2		
16	93210–07003	.O-RING .JOINT TORIQUE	1	1	1	1		
17	93210–33M49	.O-RING .JOINT TORIQUE	1	1	1	1		
18	93106–10001	.OIL SEAL .JOINT SPY	1	1	1	1		
19	93104–22M07	.OIL SEAL .JOINT SPY	2	2	2	2		
20	93210–94003	.O-RING .JOINT TORIQUE	1	1	1	1		
21	93210–37160	.O-RING .JOINT TORIQUE	1	1	1	1		
22	6AW–44365–01	.DAMPER, WATER SEAL 1 .JOINT, TUBE D'EAU 1	1	1	1	1		
23	6CE–44315–00	.GASKET, WATER PUMP .JOINT, POMPE A EAU	1	1	1	1		
24	93101–28019	.OIL SEAL .JOINT SPY	2	2	2	2		
25	93210–69MG6	.O-RING .JOINT TORIQUE	1	1	1	1		
26	93210–22MF1	.O-RING .JOINT TORIQUE	1	1	1	1		
27	93101–30030	.OIL SEAL .JOINT SPY	1	1	1	1		

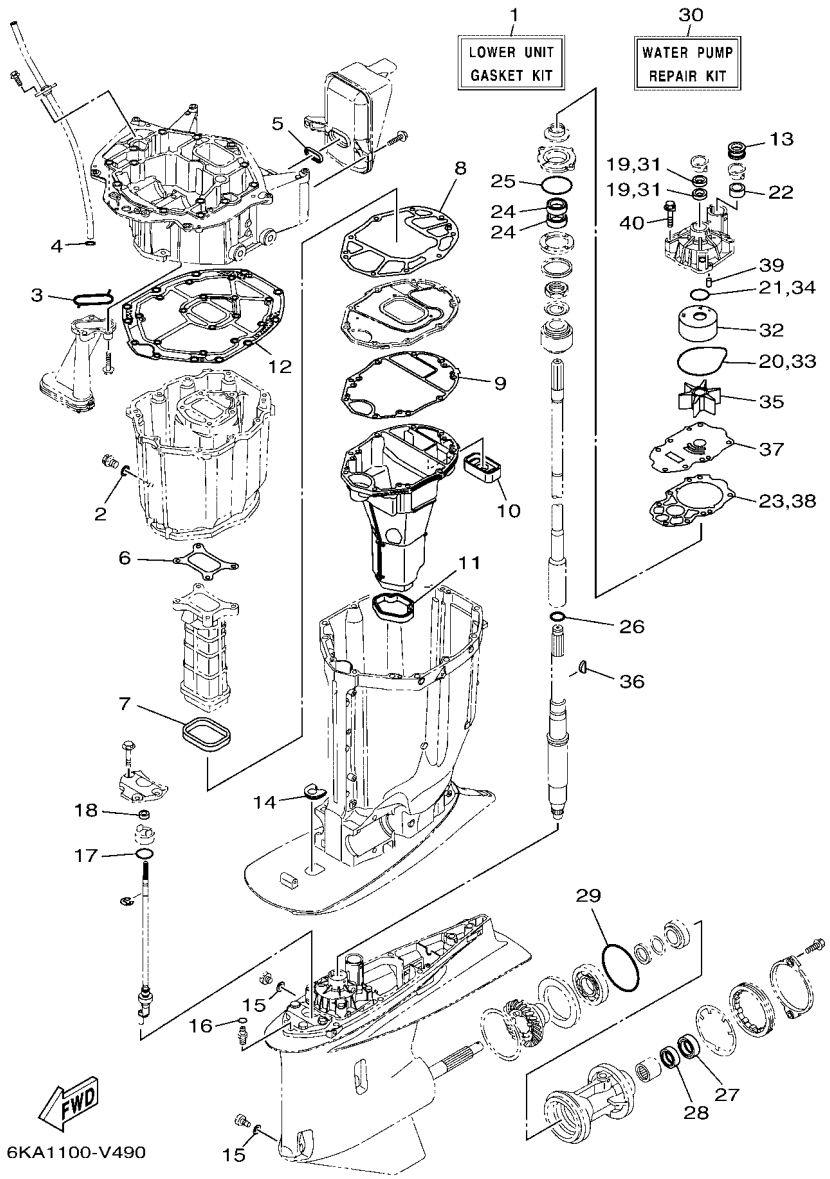

FIG. 48 REPAIR KIT 2 — KITS DE REPARATION 2

REF. NO.	PART NO. N° PIECES	DESCRIPTION DESCRIPTION	SA	NSA	NSA2	6MM1		REMARKS REMARQUES
28	93101–30019	.OIL SEAL .JOINT SPY	1	1	1	1		
29	93211–02001	.O-RING .JOINT TORIQUE	1	1	1	1		
30	6CE–W0078–02	WATER PUMP REPAIR KIT KIT DE REPARATION DE LA POMPE	1	1	1	1		
31	93104–22M07	.OIL SEAL .JOINT SPY	2	2	2	2		
32	6AW–44322–00	.INSERT, CARTRIDGE .CUVETTE	1	1	1	1		
33	93210–94003	.O-RING .JOINT TORIQUE	1	1	1	1		
34	93210–37160	.O-RING .JOINT TORIQUE	1	1	1	1		
35	6CE–44352–00	.IMPELLER .TURBINE	1	1	1	1		
36	90280–04002	.KEY, WOODRUFF .CLAVETTE, DEMI-LUNE	1	1	1	1		
37	6CE–44323–01	.OUTER PLATE, CARTRIDGE .PLAQUE EXTERIEURE	1	1	1	1		
38	6CE–44315–00	.GASKET, WATER PUMP .JOINT, POMPE A EAU	1	1	1	1		
39	93606–12019	.PIN, DOWEL .GOUPILLE	2	2	2	2		
40	90119–08191	.BOLT, WITH WASHER .BOULON, AVEC RONDELLE	4	4	4	4		

PART NO. N° PIECES	REF. NO.
6ML–11000–00	3 – 1
6ML–11110–00–9S	5 – 2
6ML–11120–00–9S	5 – 12
6S5–11133–10	5 – 3
	5 – 13
6ML–11181–00	5 – 25
	47 – 2
6ML–11182–00	5 – 30
	47 – 3
6ML–11191–00	5 – 35
6CB–11192–02	5 – 39
6CB–11193–00	5 – 36
	47 – 4
6CB–11194–00	5 – 40
	47 – 5
6ML–11301–00	5 – 19
6ML–1131B–00	3 – 12
	47 – 8
6CE–1131C–00–9S	3 – 9
68T–11325–00	1 – 4
	3 – 33
6ML–11325–00	1 – 7
	5 – 20
63P–11325–01	1 – 1
	3 – 10
	3 – 20
63P–11325–11	1 – 16
	35 – 2
67F–11328–01	5 – 21
6AW–1132N–01	1 – 5
	3 – 35
6AW–1132P–00	1 – 3
	3 – 31
6KA–11351–00	3 – 30
	47 – 12
6CB–11355–00	36 – 13
	47 – 15
6CB–1135A–00	6 – 6
6ML–11410–00	4 – 1
6GR–11416–00	4 – 5
6GR–11416–10	4 – 5
6GR–11416–20	4 – 5
6GR–11416–30	4 – 5
6GR–11416–40	4 – 5
6GR–11416–A0	4 – 5
6GR–11417–00	4 – 6
6GR–11417–10	4 – 6
6GR–11417–20	4 – 6

PART NO. N° PIECES	REF. NO.
6GR–11417–30	4 – 6
6GR–11417–40	4 – 6
6GR–11417–A0	4 – 6
6CB–11426–03	4 – 7
6CB–11427–03	4 – 8
6CB–11478–00	4 – 2
6CB–1149A–00	6 – 10
6KA–11567–00	8 – 17
6CB–11590–04	8 – 28
6ML–11603–00	4 – 12
6ML–11631–00	4 – 11
6GR–11633–00	4 – 13
6GR–11634–00	4 – 15
6ML–11654–00	4 – 10
6ML–11656–00	4 – 14
6ML–11656–10	4 – 14
6ML–11656–20	4 – 14
6ML–11656–30	4 – 14
6ML–11656–40	4 – 14
6KW–11998–00	5 – 47
6KW–11999–00	5 – 48
6ML–12111–00	8 – 1
6ML–12113–00	8 – 4
6ML–12116–00	8 – 3
51Y–12119–00	8 – 7
6ML–12121–00	8 – 2
6GR–12145–00	8 – 8
6GR–12145–10	8 – 8
6GR–12145–20	8 – 8
6GR–12145–30	8 – 8
6GR–12145–40	8 – 8
6GR–12145–50	8 – 8
6GR–12145–60	8 – 8
6GR–12153–00	8 – 8
6GR–12153–10	8 – 8
6GR–12153–20	8 – 8
6GR–12153–30	8 – 8
6GR–12153–40	8 – 8
6GR–12153–50	8 – 8
6GR–12153–60	8 – 8
6GR–12153–70	8 – 8
6GR–12153–80	8 – 8
6GR–12153–90	8 – 8
6GR–12153–A0	8 – 8
6GR–12153–B0	8 – 8
6GR–12153–C0	8 – 8
6GR–12153–D0	8 – 8
6GR–12153–E0	8 – 8

PART NO. N° PIECES	REF. NO.
6GR–12153–F0	8 – 8
6GR–12153–G0	8 – 8
6GR–12153–H0	8 – 8
6GR–12153–J0	8 – 8
6GR–12153–K0	8 – 8
6GR–12153–L0	8 – 8
6GR–12153–M0	8 – 8
6GR–12153–N0	8 – 8
6GR–12153–P0	8 – 8
6GR–12153–R0	8 – 8
6GR–12153–S0	8 – 8
6GR–12153–T0	8 – 8
6ML–12171–00	8 – 9
6ML–12172–00	8 – 13
6ML–12181–00	8 – 11
6ML–12182–00	8 – 15
6CE–12411–10	1 – 2
	3 – 22
67F–12412–00	3 – 23
6CE–12413–A0–9S	3 – 25
6CE–12413–B0–9S	3 – 24
6ML–12422–00–9S	3 – 26
6CB–12427–11	3 – 27
	47 – 11
6CB–1242F–00	6 – 2
	47 – 6
6ML–1243E–00	7 – 21
6ML–1244G–00	7 – 16
6CE–1244H–00	7 – 18
6ML–1244J–00	7 – 19
6ML–12482–00	10 – 4
6CE–12483–00	18 – 18
6KA–12483–00	10 – 14
6ML–12483–00	18 – 25
6ML–12484–00	7 – 8
6ML–12485–00	18 – 24
6CE–1248A–00	18 – 16
6AW–12572–00	25 – 14
6CB–12577–00	7 – 5
6ML–12579–00	7 – 3
6R3–12581–00	25 – 15
6AW–12582–00	25 – 16
6R3–12583–00	25 – 17
6P2–12615–00	8 – 25
6P2–12623–00	8 – 20
	8 – 23
6CB–12645–01	8 – 19
6CB–1264A–01	8 – 22

PART NO. N° PIECES	REF. NO.
6ML–12651–00	17 – 14
6ML–12653–00	17 – 17
6ML–12659–00	17 – 19
6P2–12663–00	8 – 21
	8 – 24
6CB–13016–00	1 – 10
	13 – 5
6AW–13119–00	36 – 11
6LH–13132–00	13 – 32
6CB–13161–11	12 – 6
6CB–13171–11	12 – 1
6CB–13300–00	36 – 9
6CB–13329–00	36 – 10
6CB–13411–00	36 – 6
6AW–13415–00	36 – 7
	48 – 3
6ML–13437–60	17 – 27
N26–13440–03	1 – 6
	3 – 37
6CE–13446–10–9S	3 – 39
6CB–13473–00	36 – 17
	47 – 17
6CB–13477–00	3 – 40
	47 – 18
6CB–13490–00	36 – 16
6ML–13532–00	10 – 3
6CB–13545–00	10 – 6
6CB–13546–01	10 – 10
6CB–13547–00	10 – 11
6CB–13548–00	10 – 13
6GR–13556–00	11 – 3
6CB–13577–00	12 – 4
	12 – 9
68V–13577–01	14 – 4
6KA–13582–00	25 – 10
6KA–13587–00	25 – 13
6CB–13593–00	13 – 21
69J–13631–00	36 – 12
6ML–13641–00	9 – 13
6CB–13645–00	9 – 14
6ML–13646–00	9 – 15
6ML–13710–00	11 – 1
6ML–13711–00	11 – 2
63P–13716–00	13 – 20
6LH–13716–00	13 – 43
6GR–13751–00	11 – 6
6AW–13761–01	12 – 2
	12 – 7

PART NO. N° PIECES	REF. NO.
6LH–13781–00	13 – 34
6ML–13782–00	10 – 1
6LH–13784–00	13 – 35
6ML–13881–00	9 – 2
6ML–13898–00	11 – 8
6ML–13898–10	11 – 9
6CB–13906–01	13 – 8
6LH–13915–00	1 – 11
	13 – 24
6LH–13938–00	13 – 41
6ML–13971–00	14 – 10
6ML–13972–00	14 – 12
6ML–13974–00	14 – 11
6AW–1410B–00	12 – 3
	12 – 8
6C5–14127–10	13 – 23
6FM–14137–00	13 – 44
6DA–14146–00	13 – 10
6P2–14149–00	14 – 2
6ML–14180–00	13 – 1
6ML–14181–00	13 – 15
6ML–14182–00	13 – 2
6P2–14191–00	13 – 16
68V–14216–00	13 – 12
6CB–14216–00	13 – 6
6P2–14386–00	13 – 37
6AW–1441J–01	9 – 7
6ML–14440–00	9 – 6
6LH–1447B–00	13 – 33
6CB–14546–00	13 – 26
6CB–14564–00	13 – 9
63P–14567–00	13 – 36
6K8–14591–10	13 – 18
6KA–14711–00	35 – 20
6KA–14750–00	35 – 10
6CB–14755–01	35 – 12
	48 – 5
6ML–1475A–00	10 – 15
6ML–1475E–00	10 – 17
6ML–1475F–00	10 – 25
6ML–1475G–00	10 – 20
6CB–1475H–00	13 – 13
6CB–1475J–00	13 – 14
6ML–14872–00	18 – 23
6CB–14984–00	1 – 12
	13 – 31
6CB–14985–00	13 – 25
6EK–14989–00	10 – 19

PART NO. N° PIECES	REF. NO.
6CB–15142–00	6 – 8
6ML–15142–00	5 – 43
6CB–15187–00	3 – 5
6CB–15311–01	36 – 1
6BB–15316–01	35 – 29
6ML–15319–00	3 – 44
6ML–15362–00	36 – 18
6G8–15363–00	3 – 42
6ML–15373–00	9 – 12
6KA–15377–00	36 – 19
6ML–15411–00–9S	3 – 14
6ML–15421–00–9S	3 – 15
6ML–15451–00	3 – 17
	47 – 9
6ML–15461–00	3 – 18
	47 – 10
6CB–15481–00	3 – 6
6CB–15512–00	8 – 29
6CB–15544–00	6 – 4
6ML–21266–00	2 – 28
6KA–2134V–00	5 – 45
6KA–2134X–00	9 – 21
6KA–2153A–00	2 – 33
6KA–2153B–00	2 – 34
5GJ–21717–00	26 – 10
6E5–21744–00	10 – 12
6ML–2416A–00	10 – 26
69J–24170–00	9 – 19
6FP–2419E–01	9 – 20
6CB–24217–00	13 – 7
60E–24300–01	14 – 9
6ML–24313–00	15 – 17
6ML–24314–00	15 – 2
6CB–24315–00	25 – 7
6CB–24317–00	14 – 6
6CB–24323–00	14 – 7
6CB–24324–00	14 – 5
6E5–24351–51	15 – 3
6AW–24360–02	16 – 1
6G8–24376–00	10 – 18
6CE–24377–00	18 – 17
6AW–24377–01	15 – 4
688–24378–00	7 – 12
	10 – 9
6CE–24378–00	7 – 17
6E5–24378–00	14 – 8
6ML–24378–00	7 – 20
68V–24379–10	13 – 11

PART NO. N° PIECES	REF. NO.
6GR–24410–02	13 – 27
6EK–24452–00	13 – 17
4SV–24453–00	13 – 38
6CB–24460–00	13 – 4
6CB–24461–00	14 – 1
6P3–24469–00	15 – 9
6CB–24482–00	13 – 19
6CB–24491–00	13 – 30
6CB–24492–00	13 – 28
6LH–24492–00	13 – 40
6CB–24501–01	1 – 9
	13 – 3
6P3–24519–00	15 – 8
6ML–24560–00	15 – 6
6P3–24562–21	15 – 7
6P3–24563–02	1 – 14
	15 – 11
6P3–24564–00	1 – 13
	15 – 10
6ML–24566–00	15 – 13
6ML–24568–00	15 – 12
6CB–24592–00	13 – 29
6ML–28100–00	15 – 19
67F–2812A–00	20 – 35
6ML–28199–70–D0	15 – 20
6ML–28199–70–E0	15 – 20
6ML–28199–70–F0	15 – 20
6ML–28199–70–G0	15 – 20
6ML–28199–70–H0	15 – 20
6ML–28199–70–S0	15 – 20
6ML–28199–80–K0	15 – 21
6ML–28199–80–L0	15 – 21
6ML–28199–80–M0	15 – 21
6ML–28199–80–N0	15 – 21
6ML–28199–80–P0	15 – 21
6ML–28199–80–R0	15 – 21
6CB–41132–01	35 – 13
6CB–41134–00	35 – 14
	48 – 6
6CB–41135–00	35 – 17
	48 – 8
6CE–41136–00	35 – 19
	48 – 9
6KA–41137–00	35 – 1
6CB–41138–00	35 – 16
	48 – 7
6GR–42134–00	31 – 8
6CB–42134–01	2 – 24

PART NO. N° PIECES	REF. NO.
6AW–42169–00	25 – 9
6CE–42195–10	28 – 10
6BG–42384–00	25 – 2
6DA–42384–00	24 – 26
6GR–42384–00	27 – 3
6KA–42401–20	31 – 3
6KA–42510–01–8D	32 – 1
6KA–42510–01–CE	32 – 1
6KA–42541–00	25 – 19
6CB–42545–00	2 – 5
	2 – 27
6ML–42610–00–8D	2 – 1
6ML–42610–00–CE	2 – 1
6ML–42613–00–8D	2 – 3
6ML–42613–00–CE	2 – 3
6KA–42615–20	24 – 7
6ML–42619–00	27 – 1
6ML–4261A–00–8D	2 – 2
6ML–4261A–00–CE	2 – 2
6KA–42625–00–8D	2 – 6
6KA–42625–00–CE	2 – 6
6ML–42626–00	2 – 25
6CB–42628–00	2 – 21
6ML–42643–00	25 – 24
6ML–42644–00	25 – 25
6CB–42647–A0	2 – 12
6KW–42662–00	5 – 49
6AW–42663–01	2 – 18
6ML–42678–00	2 – 30
6KA–4267A–00	2 – 31
6ML–42682–00	2 – 32
6DA–42697–00	31 – 20
6KN–42697–00	2 – 22
6LB–42697–00	2 – 23
6KA–42710–00–8D	24 – 1
6KA–42710–00–CE	24 – 1
6CB–42716–01	24 – 8
67F–42717–00	35 – 9
6DA–42717–01	24 – 25
6KA–42723–00–8D	26 – 11
6KA–42723–00–CE	26 – 11
6KA–42723–10–8D	42 – 1
6KA–42723–10–CE	42 – 1
6BG–42724–01	25 – 1
6E5–42724–01	35 – 8
6GR–42724–01	27 – 2
6KA–42725–01	24 – 2
676–42726–00	26 – 17

PART NO. N° PIECES	REF. NO.
64G–42727–01	25 – 4
6KA–42740–00–8D	26 – 1
6KA–42740–00–CE	26 – 1
6H4–42748–01	24 – 27
68F–42753–00	24 – 3
63P–42756–00	27 – 8
6ML–42756–00	24 – 31
69M–42758–01	18 – 5
	20 – 14
6CB–42761–00	24 – 5
6ML–42766–00	24 – 29
6KA–42769–00	26 – 16
6KA–42770–00–8D	26 – 2
6KA–42770–00–CE	26 – 2
6CE–42774–A0	26 – 9
6EE–42794–40	24 – 35
6EE–42794–50	24 – 36
6KA–42811–00	27 – 11
6KA–42815–00–8D	24 – 9
6KA–42815–00–CE	24 – 9
6KA–42816–00–8D	24 – 10
6KA–42816–00–CE	24 – 10
6KA–42817–00–8D	24 – 11
6KA–42817–00–CE	24 – 11
6CB–42818–00	24 – 15
6CB–42819–00	24 – 16
6ML–43111–00–8D	29 – 1
6ML–43111–00–CE	29 – 1
6ML–43112–00–8D	29 – 8
6ML–43112–00–CE	29 – 8
6KA–43121–00	31 – 13
6KA–43126–00	30 – 10
66T–43144–00	24 – 20
6G5–43144–00	29 – 14
6G5–43148–00	29 – 19
6KA–43181–00	29 – 16
6KA–43185–00	29 – 17
6KA–43311–00–8D	29 – 10
6KA–43311–00–CE	29 – 10
6KA–43318–00–8D	31 – 22
6KA–43318–00–CE	31 – 22
6GR–43333–00	29 – 23
6KA–43341–00	31 – 16
6KA–43342–00	31 – 17
6AW–43376–00	30 – 14
6GR–43378–10	31 – 10
6KA–43801–00	33 – 4
6KA–43804–01	34 – 3

PART NO. N° PIECES	REF. NO.
6KA–43805–00	34 – 2
6KA–43806–00	34 – 5
6CE–4380P–00	33 – 12
6KA–43810–00	33 – 3
61A–43811–00	33 – 9
63P–43812–20	33 – 76
61A–43813–02	33 – 18
6H1–43814–11	33 – 17
69J–43816–00	33 – 62
69J–43817–00	33 – 67
6ML–43818–00	33 – 25
69J–4381C–00	33 – 30
	33 – 35
6KA–4381E–00	30 – 18
6KA–4381F–00	30 – 20
69J–4381J–00	33 – 63
69J–43820–01	33 – 78
6ML–43821–00	33 – 77
6KA–43828–00	33 – 70
6H1–43829–00	33 – 73
6KA–4382A–00	30 – 4
69J–4382E–00	33 – 11
6ML–43830–00	33 – 33
69J–43831–00	33 – 65
69J–43833–02	33 – 21
69J–43835–10	33 – 19
6KA–43840–00	33 – 2
6CJ–43841–00	33 – 42
6CJ–43843–00	33 – 53
6H1–43844–10	33 – 55
63P–43844–20	33 – 50
69J–43845–00	33 – 28
69A–4384F–00	33 – 39
69J–4384G–00	33 – 58
6H1–4384G–11	33 – 54
69J–4384H–00	33 – 10
61A–4384H–10	33 – 81
6CJ–4384M–00	33 – 38
69J–43851–00	33 – 49
69J–43853–00	33 – 45
69J–43854–00	33 – 57
69J–43855–00	33 – 52
6H1–43856–10	33 – 56
61A–43861–00	33 – 14
	33 – 16
	33 – 74
63P–43861–20	33 – 6
6KA–43862–00	34 – 13

PART NO. N° PIECES	REF. NO.
6D8–43863–00	33 – 27
	33 – 75
61A–43864–00	33 – 80
60V–4386A–00	33 – 44
6KA–4386K–00	34 – 6
61A–43871–00	33 – 15
69J–43871–00	33 – 61
6H1–43872–00	33 – 7
61A–43874–00	33 – 79
6H1–43875–00	33 – 29
61A–43875–10	33 – 82
61A–43876–01	33 – 26
6KA–43879–00	34 – 8
6KA–4387G–00	34 – 14
6ML–43880–00	34 – 1
6ML–43881–00	34 – 9
6KA–43882–00	34 – 12
6H1–43883–00	33 – 43
69J–43888–00	33 – 71
69J–4388E–01	33 – 23
69J–4388F–00	33 – 68
6KA–4388F–00	34 – 11
69J–4388H–00	33 – 66
69J–4388J–00	33 – 20
6KA–43892–00	34 – 4
6CJ–43893–00	33 – 46
69J–43894–00	33 – 41
69J–43899–01	33 – 31
61A–4389H–01	33 – 8
69J–4389J–00	33 – 32
	33 – 36
6KA–438A0–01	31 – 5
6CE–44117–10	28 – 16
6CE–44118–A0	28 – 20
6KA–44120–00	28 – 22
6CE–44121–10	28 – 18
6CE–44122–20	28 – 11
6ML–44142–00	28 – 9
6KA–44150–00	37 – 14
	43 – 14
6KB–44150–00	39 – 14
	44 – 14
6KA–44190–00	38 – 32
	40 – 32
	46 – 6
6KA–44190–10	46 – 6
6CE–44194–01	32 – 28
6CE–44311–01	37 – 16

PART NO. N° PIECES	REF. NO.
6CE–44311–01	39 – 16
	43 – 16
	44 – 16
6AW–44312–00	37 – 22
	38 – 11
	39 – 22
	40 – 11
	43 – 22
	44 – 22
	46 – 16
6CB–44312–00	37 – 29
	39 – 29
	43 – 29
	44 – 29
6CE–44315–00	37 – 26
	39 – 26
	43 – 26
	44 – 26
	48 – 23
	48 – 38
6AW–44322–00	37 – 18
	39 – 18
	43 – 18
	44 – 18
	48 – 32
6CE–44323–01	37 – 25
	39 – 25
	43 – 25
	44 – 25
	48 – 37
6GR–44331–00	31 – 6
6GR–44332–00	31 – 7
6CE–44352–00	37 – 23
	39 – 23
	43 – 23
	44 – 23
	48 – 35
6CE–44361–00	38 – 3
	40 – 3
6CE–44362–00	38 – 9
	40 – 9
	46 – 14
6AW–44363–00	38 – 12
	40 – 12
	46 – 17
6CE–44363–00	46 – 17
6AW–44365–01	37 – 21
	38 – 1

PART NO. N° PIECES	REF. NO.
6AW–44365–01	38 – 10
	39 – 21
	40 – 1
	40 – 10
	43 – 21
	44 – 21
	46 – 15
	48 – 22
6AW–44366–01	38 – 2
	38 – 5
	40 – 2
	40 – 5
	46 – 12
	46 – 12
	48 – 13
6KA–44385–00	41 – 1
6P2–44391–00	24 – 28
6CE–44511–00	32 – 30
6CE–44514–00	32 – 20
6KA–44521–00	35 – 39
	48 – 14
6CE–44526–00	32 – 21
6G5–44526–00	29 – 3
6CE–44532–01	32 – 23
6CE–44533–00	32 – 29
6CE–44536–00	32 – 22
6CE–44551–00–CA	32 – 6
6AW–44552–00–CA	32 – 18
6KA–44555–00	32 – 9
6CE–44574–00	32 – 8
6KA–45111–01–8D	35 – 25
6KA–45111–01–CE	35 – 25
6CB–45113–10	35 – 26
	48 – 12
6CE–45123–00	35 – 24
	48 – 11
6CE–45127–00	35 – 23
	48 – 10
6BB–45152–01	35 – 30
61A–45155–01	35 – 35
6KA–45181–00	35 – 18
6KA–45211–00–8D	46 – 8
	46 – 9
6KA–45211–00–CE	38 – 4
	40 – 4
	46 – 8
	46 – 9
6CE–45211–10–8D	46 – 8

PART NO. N° PIECES	REF. NO.
6CE–45211–10–CE	46 – 8
6KA–45214–00	38 – 19
	40 – 19
	45 – 2
6KA–45215–00	38 – 20
	40 – 20
	45 – 3
6CE–45224–00	38 – 22
	40 – 22
	45 – 5
6CE–45225–00	38 – 23
	40 – 23
	45 – 6
6AW–45244–00	37 – 42
	39 – 42
	43 – 42
	44 – 42
6G5–45251–02	1 – 15
	29 – 2
6KA–45254–00	38 – 26
	40 – 26
	45 – 9
6KA–45255–00	38 – 27
	40 – 27
	45 – 10
6ML–45300–00–8D	43 – 1
6MM–45300–00–8D	44 – 1
6ML–45300–00–CE	37 – 1
	43 – 1
6MM–45300–00–CE	39 – 1
	44 – 1
6KA–45301–00–8D	43 – 2
	44 – 2
6KA–45301–00–CE	37 – 2
	39 – 2
	43 – 2
	44 – 2
69J–45318–01	35 – 32
6CE–45321–20	37 – 11
	39 – 11
	43 – 11
	44 – 11
6CE–45332–00–CA	37 – 69
	43 – 69
6CF–45332–01–CA	39 – 67
	44 – 67
6AW–45335–00–CA	37 – 31
	39 – 31

PART NO. N° PIECES	REF. NO.
6AW–45335–00–CA	43 – 31
	44 – 31
688–45341–10	37 – 4
	39 – 4
	43 – 4
	44 – 4
6KA–45344–00	37 – 37
	39 – 37
	43 – 37
	44 – 37
6CE–45361–10	37 – 84
	39 – 80
	43 – 84
	44 – 80
6CE–45373–00	1 – 19
	38 – 30
	40 – 30
	45 – 13
6CE–45375–00	37 – 8
	39 – 8
	43 – 8
	44 – 8
663–45376–00	37 – 7
	39 – 7
	43 – 7
	44 – 7
63P–45378–00	37 – 9
	38 – 7
	39 – 9
	40 – 7
	43 – 9
	44 – 9
	46 – 10
	46 – 10
6ML–45379–00	35 – 37
6CB–45383–00	37 – 82
	39 – 78
	43 – 82
	44 – 78
6CB–45384–00	37 – 83
	39 – 79
	43 – 83
	44 – 79
6KA–45501–00	37 – 44
	39 – 44
	43 – 44
	44 – 44
6T5–45539–00	37 – 43

PART NO. N° PIECES	REF. NO.
6T5–45539–00	39 – 43
	43 – 43
	44 – 43
6KA–45550–00	37 – 48
	43 – 48
6KB–45550–00	39 – 48
	44 – 48
6KB–45560–00	39 – 50
	44 – 50
676–45567–00	37 – 80
	43 – 80
6CB–45567–00	37 – 57
	39 – 55
	43 – 57
	44 – 55
676–45567–10	37 – 80
	43 – 80
6CB–45567–10	37 – 57
	39 – 55
	43 – 57
	44 – 55
676–45567–20	37 – 80
	43 – 80
6CB–45567–20	37 – 57
	39 – 55
	43 – 57
	44 – 55
676–45567–30	37 – 80
	43 – 80
6CB–45567–30	37 – 57
	39 – 55
	43 – 57
	44 – 55
676–45567–40	37 – 80
	43 – 80
6CB–45567–40	37 – 57
	39 – 55
	43 – 57
	44 – 55
676–45567–50	37 – 80
	43 – 80
6CB–45567–50	37 – 57
	39 – 55
	43 – 57
6K1–45571–00	37 – 71
	43 – 71
6CB–45576–00	37 – 72

PART NO. N° PIECES	REF. NO.
6CB–45576–00	43 – 72
6CF–45576–00	39 – 69
	44 – 69
6CB–45577–00	37 – 77
	39 – 74
	43 – 77
	44 – 74
6CB–45577–10	37 – 77
	39 – 74
	43 – 77
	44 – 74
6CB–45577–20	37 – 77
	39 – 74
	43 – 77
	44 – 74
6CB–45577–30	37 – 77
	39 – 74
	43 – 77
	44 – 74
6CB–45577–40	37 – 77
	39 – 74
	43 – 77
	44 – 74
6CB–45577–50	37 – 77
	39 – 74
	43 – 77
	44 – 74
6CB–45577–60	37 – 77
	39 – 74
	43 – 77
	44 – 74
6K1–45578–01	39 – 76
	44 – 76
6K1–45578–10	39 – 76
	44 – 76
6K1–45578–20	39 – 76
	44 – 76
6K1–45578–30	39 – 76
	44 – 76
6K1–45578–40	39 – 76
	44 – 76
6K1–45578–50	39 – 76
	44 – 76
6K1–45578–60	39 – 76
	44 – 76
6AW–45587–00	37 – 35
	39 – 35
	43 – 35

PART NO. N° PIECES	REF. NO.
6AW–45587–00	44 – 35
6AW–45587–10	37 – 35
	39 – 35
	43 – 35
	44 – 35
6AW–45587–20	37 – 35
	39 – 35
	43 – 35
	44 – 35
6AW–45587–30	37 – 35
	39 – 35
	43 – 35
	44 – 35
6AW–45587–40	37 – 35
	39 – 35
	43 – 35
	44 – 35
6AW–45587–50	37 – 35
	39 – 35
	43 – 35
	44 – 35
6AW–45587–60	37 – 35
	39 – 35
	43 – 35
	44 – 35
6CB–45611–00	37 – 58
	43 – 58
6KB–45611–00	39 – 56
	44 – 56
6ML–45631–00	37 – 67
	39 – 65
	43 – 67
	44 – 65
6E5–45633–01	37 – 68
	39 – 66
	43 – 68
	44 – 66
6CB–45634–00	37 – 59
	39 – 57
	43 – 59
	44 – 57
61A–45635–00	37 – 63
	39 – 61
	43 – 63
	44 – 61
6H1–45668–00	37 – 62
	39 – 60
	43 – 62

PART NO. N° PIECES	REF. NO.
6H1–45668–00	44 – 60
6KA–45802–00	37 – 45
	39 – 45
	43 – 45
	44 – 45
6KA–45802–10	37 – 45
	39 – 45
	43 – 45
	44 – 45
6KA–45802–20	43 – 45
	44 – 45
6CB–45824–00	37 – 51
	39 – 52
	43 – 51
	44 – 52
69J–45987–00	38 – 34
	40 – 34
	45 – 15
688–45997–01	38 – 35
	40 – 35
	45 – 16
6ML–45B76–00	38 – 39
	45 – 20
6MM–45B76–00	40 – 39
	45 – 22
6ML–45B78–00	38 – 39
	45 – 20
6MM–45B78–00	40 – 39
	45 – 22
6ML–45B80–00	38 – 39
	45 – 20
6MM–45B80–00	40 – 39
	45 – 22
6ML–45B82–00	38 – 39
	45 – 20
6MM–45B82–00	40 – 39
	45 – 22
6ML–45B84–00	38 – 39
	45 – 20
6MM–45B84–00	40 – 39
	45 – 22
6ML–45B86–00	38 – 39
	45 – 20
6MM–45B86–00	40 – 39
	45 – 22
6CE–45C81–10	38 – 40
	40 – 40
	45 – 21

PART NO. N° PIECES	REF. NO.
6CE–45C81–10	45 – 23
6KA–46153–00	35 – 33
6KA–47445–00	31 – 14
6KA–47651–00	30 – 16
6ML–4820A–00	28 – 1
6CE–68303–00	28 – 29
68V–81147–00	11 – 5
6P2–81336–01	20 – 37
6ML–81410–00	17 – 3
6CB–81443–00	22 – 6
6CB–81639–10	20 – 31
6CE–81800–02	23 – 1
6CE–81801–01	23 – 5
6CE–81807–00	23 – 8
6CB–81809–00	23 – 14
6CE–81810–00	23 – 3
67F–81813–00	23 – 6
6CE–81820–00	23 – 7
6CE–81821–00	23 – 11
6ML–81822–00	22 – 4
6CB–81823–A0	22 – 8
6CB–81826–00	23 – 22
69J–81828–00	23 – 23
6CE–81830–00	23 – 16
6CB–81832–00	23 – 9
6CB–81836–00	23 – 10
6CE–81839–00	23 – 19
67F–8183R–00	23 – 13
60V–8183T–00	23 – 17
6P2–8183X–00	20 – 22
6CE–81840–01	23 – 4
67F–81841–00	23 – 12
6CE–81842–00	23 – 18
6BR–81845–00	18 – 7
67F–81846–00	23 – 24
6CE–81850–00	23 – 2
6CE–81869–00	23 – 21
67F–81891–00	23 – 15
6ML–81919–00	20 – 39
6KA–81920–00	20 – 1
6ML–81929–00	20 – 8
6C5–81941–01	23 – 20
6ML–81942–00	17 – 21
6CB–81948–02	20 – 12
6KW–81949–00	22 – 12
6AW–81950–00	20 – 19
6CB–81952–00	21 – 21
6AW–8195A–00	20 – 26

PART NO. N° PIECES	REF. NO.
6CE–81960–10	18 – 11
6CE–81972–00–9S	18 – 12
6CE–81975–00	18 – 13
6CE–81980–01	21 – 2
6EE–81994–40	17 – 28
6EE–81994–50	17 – 29
6AH–81996–00	24 – 37
6ML–82105–00	20 – 42
6P2–82113–00	20 – 34
6GR–82119–00	20 – 7
6U0–82127–00	29 – 5
6KA–82147–00	29 – 13
6AW–82149–00	32 – 14
67F–82151–00	20 – 29
6CE–82151–00	20 – 25
6GR–82151–00	20 – 2
67F–82151–10	20 – 30
67F–82151–40	20 – 27
67F–82151–50	20 – 28
6ML–82170–00	20 – 24
6ML–82310–00	19 – 1
6CB–82314–00	19 – 4
6CB–82316–01	18 – 3
6A0–82317–01	17 – 22
6ML–82388–00	21 – 11
6KA–82553–00	30 – 9
6GR–82563–00	21 – 20
6KA–8257V–01	27 – 5
6ML–82588–00	20 – 10
6ML–82589–00	21 – 7
6ML–82590–00	21 – 1
6ML–82594–00	21 – 4
6KA–8259M–01	22 – 11
68F–82846–00	20 – 33
6KA–83383–01	9 – 26
6AW–83651–01	21 – 18
68F–83688–10	11 – 4
6P2–85075–00	19 – 7
68F–85119–00	9 – 9
64J–85516–01	18 – 4
	20 – 13
68F–85516–01	9 – 10
6CB–85544–00	20 – 32
689–85547–01	15 – 1
6CB–85561–00	17 – 5
6CE–85564–00	28 – 8
6CB–85580–00	17 – 4
6ML–85586–00	17 – 12

PART NO. N° PIECES	REF. NO.
6ML–85592–00	17 – 10
6P2–85780–01	6 – 11
6CB–85790–00	21 – 15
6ML–85790–00	21 – 16
6GR–85887–00	30 – 6
6P2–85896–00	19 – 6
6ML–8591A–00	18 – 1
6C5–86120–00	10 – 23
6CB–86120–00	6 – 1
6LH–87226–00	13 – 42
6KA–87228–00	31 – 1
6KA–8722G–00	31 – 2
K0F–A3741–00	8 – 5
K0F–A3742–00	8 – 6
6ML–W0001–00	47 – 1
6KA–W0001–20	48 – 1
6CE–W0078–02	1 – 20
	48 – 30
6ML–W009A–00–9S	5 – 1
6ML–W009C–00–9S	5 – 11
6ML–W1165–00	4 – 9
6ML–W1390–00	13 – 22
6ML–W1510–00	3 – 2
6GR–W436G–00–8D	31 – 19
6GR–W436G–00–CE	31 – 19
6ML–W4380–00–8D	33 – 1
6ML–W4380–00–CE	33 – 1
6CB–W4624–00	8 – 27
6ML–W8145–00	17 – 1
6EK–W9010–00	17 – 2
90101–12067	29 – 24
	29 – 28
90101–12068	29 – 28
90101–12071	29 – 28
90101–12072	29 – 28
90101–12073	29 – 28
90101–12074	29 – 28
90101–12076	29 – 28
	29 – 28
90101–12077	29 – 28
90101–14004	32 – 15
90105–06035	6 – 3
90105–06037	3 – 29
	3 – 46
	6 – 7
90105–06039	25 – 30
90105–06151	3 – 19
	3 – 41

PART NO. N° PIECES	REF. NO.
90105–06151	22 – 9
90105–06229	6 – 9
90105–06M07	3 – 13
	5 – 22
90105–08175	3 – 7
	5 – 28
	5 – 33
90105–08178	6 – 5
90105–08220	5 – 29
	5 – 34
90105–08M61	37 – 85
	39 – 81
	43 – 85
	44 – 81
90105–08M87	9 – 1
	22 – 5
90105–10M00	38 – 31
	40 – 31
	45 – 14
90105–14005	32 – 25
90109–06277	5 – 38
	5 – 42
90109–06M80	26 – 8
90110–05039	38 – 21
	38 – 25
	40 – 21
	40 – 25
	45 – 4
	45 – 8
90111–06144	26 – 3
	30 – 19
	30 – 21
	31 – 21
	31 – 23
90111–08078	2 – 13
90116–10066	46 – 1
90116–10067	38 – 14
	40 – 14
	46 – 1
90119–05M03	17 – 9
90119–05M04	9 – 27
90119–06047	12 – 5
	12 – 10
90119–06287	35 – 38
90119–06291	25 – 29
90119–06293	18 – 6
	20 – 15
90119–06299	9 – 18

PART NO. N° PIECES	REF. NO.
90119–06309	9 – 24
90119–06310	15 – 14
90119–06MA3	18 – 14
90119–06MA6	9 – 17
90119–07001	5 – 5
	5 – 15
90119–07234	5 – 6
	5 – 16
90119–08020	9 – 16
90119–08168	28 – 4
90119–08175	28 – 5
90119–08176	31 – 18
90119–08180	37 – 30
	39 – 30
	43 – 30
	44 – 30
90119–08182	35 – 4
90119–08187	24 – 24
90119–08191	37 – 28
	39 – 28
	43 – 28
	44 – 28
	48 – 40
90119–10008	38 – 18
	40 – 18
	46 – 5
90119–10009	38 – 17
	40 – 17
	46 – 4
90119–10024	30 – 2
	32 – 19
	32 – 31
	38 – 14
	40 – 14
	46 – 1
90119–10050	8 – 18
90119–10060	46 – 5
90119–10061	46 – 4
90119–10064	30 – 3
90119–10070	35 – 27
90119–10M07	8 – 31
90149–05048	37 – 47
	39 – 47
	43 – 47
	44 – 47
90149–11001	5 – 27
	5 – 32
90151–05M05	3 – 34

PART NO. N° PIECES	REF. NO.
90151–06M02	3 – 11
	3 – 21
	35 – 3
90159–06053	26 – 5
	26 – 15
90170–30M18	37 – 41
	39 – 41
	43 – 41
	44 – 41
90171–18M04	38 – 37
	40 – 37
	45 – 18
90179–06M28	2 – 4
	5 – 46
90179–08003	22 – 2
90179–14009	31 – 11
90179–16017	37 – 49
	39 – 49
	43 – 49
	44 – 49
90183–02M03	37 – 65
	39 – 63
	43 – 65
	44 – 63
90183–05M06	2 – 29
90183–061A8	26 – 4
	26 – 14
90185–05002	38 – 24
	38 – 28
	40 – 24
	40 – 28
	45 – 7
	45 – 11
90185–06M07	5 – 50
	28 – 14
90185–14M00	32 – 16
	32 – 26
90201–02M00	37 – 64
	39 – 62
	43 – 64
	44 – 62
90201–053R1	2 – 10
90201–06068	28 – 13
90201–10M01	8 – 32
90201–11008	28 – 26
90201–12064	28 – 6
90201–12426	29 – 26
90201–13M01	29 – 25

PART NO. N° PIECES	REF. NO.
90201–156J2	24 – 13
90201–15M58	32 – 13
90201–16032	32 – 10
90201–186F1	5 – 8
	5 – 18
90201–301U7	37 – 39
	39 – 39
	43 – 39
	44 – 39
90201–32008	37 – 79
	43 – 79
90201–35008	32 – 12
90201–40M00	32 – 2
90201–41008	37 – 54
	43 – 54
90201–68008	37 – 34
	39 – 34
	43 – 34
	44 – 34
90202–08M41	28 – 12
90202–32M19	32 – 11
90202–40M47	32 – 5
90206–15M18	24 – 14
90214–30003	37 – 40
	39 – 40
	43 – 40
	44 – 40
90249–06M19	29 – 20
90250–08M07	37 – 66
	39 – 64
	43 – 66
	44 – 64
90269–05001	17 – 20
90280–04002	37 – 24
	39 – 24
	43 – 24
	44 – 24
	48 – 36
90282–05008	37 – 81
	39 – 77
	43 – 81
	44 – 77
90340–08002	37 – 6
	39 – 6
	43 – 6
	44 – 6
90340–14M06	5 – 9
	36 – 4

PART NO. N° PIECES	REF. NO.
90340–18M09	5 – 7
	5 – 17
90386–08008	28 – 3
90386–10001	28 – 27
90386–10M16	29 – 18
90386–11001	28 – 24
90386–15M73	24 – 12
90386–18M14	30 – 13
	33 – 24
90386–39M89	32 – 3
90387–06119	17 – 23
90387–06176	9 – 11
90387–06289	9 – 23
	15 – 16
90387–06M03	25 – 28
90387–06M43	26 – 7
	26 – 13
90387–07054	2 – 8
	9 – 4
90387–08104	28 – 7
90387–08M37	24 – 23
90387–08M45	2 – 16
90387–10094	2 – 14
90387–11005	5 – 26
	5 – 31
90387–28013	32 – 24
90401–19001	3 – 38
90413–10001	25 – 12
90430–06M03	5 – 23
90430–08003	1 – 18
	37 – 5
	39 – 5
	43 – 5
	44 – 5
	48 – 15
90430–10004	21 – 17
90430–14115	5 – 10
90430–14M09	1 – 17
	36 – 5
	48 – 2
90445–09120	7 – 13
90445–096H2	7 – 14
90445–107A5	18 – 19
90445–14021	25 – 8
90445–15M03	24 – 19
90446–15006	20 – 23
90462–06013	18 – 21
90464–07209	10 – 8

PART NO. N° PIECES	REF. NO.
90464–08004	21 – 6
	24 – 33
90464–09013	10 – 16
90464–10M57	10 – 22
90464–11012	10 – 21
90464–11121	17 – 26
90464–12009	14 – 17
90464–12010	7 – 2
	14 – 15
90464–12012	14 – 18
	14 – 19
90464–12183	17 – 16
	20 – 17
	21 – 10
	21 – 14
90464–13013	14 – 16
90464–13249	9 – 25
	9 – 28
	18 – 9
	20 – 16
	21 – 13
	27 – 7
90464–16001	21 – 19
90464–16017	25 – 11
90464–18004	22 – 10
90464–18011	25 – 26
90464–18246	21 – 9
90464–19M45	24 – 34
90464–20181	10 – 7
	18 – 10
	20 – 18
	21 – 3
	27 – 10
90464–20258	24 – 4
90464–23001	10 – 27
	14 – 14
90464–23004	7 – 1
90464–23005	9 – 29
90464–26002	7 – 7
	7 – 9
90464–99004	9 – 8
	33 – 83
90465–11M10	7 – 4
	7 – 6
	7 – 10
	7 – 15
	10 – 5
	15 – 5

PART NO. N° PIECES	REF. NO.
90465–11M10	15 – 18
	17 – 11
	18 – 26
	18 – 27
	25 – 3
	25 – 20
	28 – 2
	30 – 1
90465–11M59	7 – 22
	27 – 4
90465–14M66	7 – 23
90467–08M18	18 – 28
90467–09M09	7 – 11
	18 – 20
90467–130A5	25 – 21
90467–140A8	25 – 22
90467–140A9	14 – 13
	25 – 23
90467–141A2	14 – 3
90468–18008	28 – 15
	28 – 19
90480–10M23	9 – 22
	15 – 15
90480–12314	17 – 25
	19 – 5
90480–13004	2 – 7
	9 – 3
90480–13163	25 – 6
90480–13M24	26 – 6
	26 – 12
90480–14029	25 – 27
90480–16009	2 – 11
90480–19031	25 – 5
90480–22M81	24 – 22
90501–10M77	37 – 60
	39 – 58
	43 – 60
	44 – 58
90506–16010	29 – 22
90506–22001	24 – 18
91318–05025	33 – 59
91318–05040	33 – 64
91380–04010	31 – 9
91380–05020	38 – 29
	40 – 29
	45 – 12
91490–20025	31 – 12
91490–40030	38 – 38

PART NO. N° PIECES	REF. NO.
91490–40030	40 – 38
	45 – 19
91690–30020	29 – 21
91690–40010	3 – 16
91690–60022	30 – 11
91809–08006	5 – 4
	5 – 14
92990–06100	2 – 19
92990–08600	2 – 15
92990–18200	38 – 36
	40 – 36
	45 – 17
92995–10600	38 – 15
	40 – 15
	46 – 2
92995–14600	32 – 17
	32 – 27
93101–28019	37 – 32
	39 – 32
	43 – 32
	44 – 32
	48 – 24
93101–30019	37 – 75
	39 – 72
	43 – 75
	44 – 72
	48 – 28
93101–30030	37 – 74
	39 – 71
	43 – 74
	44 – 71
	48 – 27
93102–38008	8 – 26
	47 – 14
93102–85008	4 – 4
	47 – 13
93104–22M07	37 – 17
	39 – 17
	43 – 17
	44 – 17
	48 – 19
	48 – 31
93106–10001	37 – 13
	39 – 13
	43 – 13
	44 – 13
	48 – 18
93106–19001	33 – 5

PART NO. N° PIECES	REF. NO.
93210–064A5	33 – 51
93210–06ME6	30 – 12
93210–07003	37 – 10
	38 – 8
	39 – 10
	40 – 8
	43 – 10
	44 – 10
	46 – 11
	46 – 11
	48 – 16
93210–08391	33 – 48
93210–09165	28 – 23
	33 – 72
	38 – 33
	40 – 33
	46 – 7
93210–11001	19 – 8
93210–17239	33 – 22
93210–17MF9	30 – 7
93210–19001	19 – 2
93210–19MJ3	36 – 20
	48 – 4
93210–22MF1	37 – 46
	39 – 46
	43 – 46
	44 – 46
	48 – 26
93210–24M79	3 – 43
	47 – 19
93210–26658	3 – 8
	36 – 15
	47 – 7
	47 – 16
93210–27370	3 – 45
	47 – 20
93210–33M49	37 – 12
	39 – 12
	43 – 12
	44 – 12
	48 – 17
93210–35321	32 – 4
93210–37160	37 – 20
	39 – 20
	43 – 20
	44 – 20
	48 – 21
	48 – 34

PART NO. N° PIECES	REF. NO.
93210–66001	33 – 69
93210–69MG6	37 – 36
	39 – 36
	43 – 36
	44 – 36
	48 – 25
93210–94003	37 – 19
	39 – 19
	43 – 19
	44 – 19
	48 – 20
	48 – 33
93211–02001	37 – 76
	39 – 73
	43 – 76
	44 – 73
	48 – 29
93306–209U0	37 – 70
	43 – 70
93311–83280	37 – 3
	39 – 3
	43 – 3
	44 – 3
93311–85894	37 – 50
	39 – 51
	43 – 50
	44 – 51
93315–43061	37 – 73
	39 – 70
	43 – 73
	44 – 70
93332–00048	39 – 68
	44 – 68
93332–000A4	37 – 53
	43 – 53
93332–000A5	37 – 78
	43 – 78
93340–67011	37 – 56
	39 – 54
	43 – 56
	44 – 54
93341–440U5	39 – 75
	44 – 75
93399–99962	37 – 33
	39 – 33
	43 – 33
	44 – 33
93410–10082	28 – 28

PART NO. N° PIECES	REF. NO.
93410–37M04	32 – 7
93420–50093	35 – 34
93501–04011	37 – 61
	39 – 59
	43 – 61
	44 – 59
93501–08001	33 – 47
93503–16003	33 – 37
93505–32038	33 – 13
	33 – 34
93604–07M13	28 – 21
93604–35236	33 – 60
93605–10108	8 – 10
	8 – 12
	8 – 14
	8 – 16
93606–12019	3 – 3
	3 – 4
	4 – 3
	37 – 27
	39 – 27
	43 – 27
	44 – 27
	48 – 39
93606–19M23	35 – 22
93608–16M16	35 – 7
	35 – 28
	36 – 3
	37 – 52
	38 – 6
	38 – 13
	39 – 53
	40 – 6
	40 – 13
	43 – 52
	44 – 53
	45 – 1
	46 – 13
	46 – 13
93700–06002	29 – 7
	29 – 9
	29 – 11
94702–00442	1 – 8
	5 – 51
95022–06035	17 – 7
95023–06012	18 – 22
95027–06025	3 – 28
95380–06600	2 – 20

PART NO. N° PIECES	REF. NO.
95380–06600	10 – 24
95380–10600	38 – 16
	40 – 16
	46 – 3
95380–12600	29 – 27
95780–08300	2 – 17
95780–10300	30 – 15
95812–06025	36 – 8
95D75–06025	28 – 25
	28 – 30
95D75–06040	36 – 14
95D75–08060	11 – 7
95D95–06010	35 – 36
95D95–06012	17 – 18
	18 – 8
	21 – 5
	24 – 21
	24 – 30
	24 – 32
	27 – 6
	27 – 9
	27 – 12
	30 – 17
	31 – 15
	31 – 24
95D95–06014	5 – 44
	24 – 6
95D95–06016	9 – 5
	10 – 2
	17 – 15
	20 – 11
	21 – 12
	21 – 22
	22 – 7
	36 – 21
95D95–06020	18 – 2
	20 – 9
	21 – 8
	35 – 11
95D95–06025	17 – 24
	18 – 15
	19 – 3
95D95–06030	5 – 37
	5 – 41
	17 – 8
95D95–08012	24 – 17
95D95–08016	20 – 3
95D95–08020	20 – 4

PART NO. N° PIECES	REF. NO.
95D95–08025	5 – 24
97513–06520	20 – 21
97513–08545	22 – 1
97580–08535	31 – 4
97595–05516	30 – 5
	30 – 8
97602–04306	34 – 7
97602–04308	34 – 10
97780–50016	2 – 9
	2 – 26
97780–50620	20 – 36
97780–60520	25 – 18
97985–04308	22 – 3
97D95–06010	29 – 15
97D95–06012	35 – 31
97E75–06525	28 – 17
97E75–08535	35 – 21
	36 – 2
97E75–08560	35 – 15
97E75–10535	35 – 6
97E75–10545	35 – 5
97E75–10570	38 – 18
	40 – 18
	46 – 5
97E95–06510	29 – 6
	29 – 12
97E95–06516	17 – 13
	20 – 5
	20 – 6
	20 – 38
97E95–06520	19 – 9
97E95–06525	29 – 4
97E95–06610	20 – 20
97E95–08516	20 – 40
	20 – 41
97E95–08520	37 – 38
	39 – 38
	43 – 38
	44 – 38
98507–04008	13 – 39
98780–06530	3 – 32
98780–06550	3 – 36
99001–09600	37 – 15
	39 – 15
	43 – 15
	44 – 15
99002–03600	33 – 40
99009–47500	37 – 55

PART NO. N° PIECES	REF. NO.
99009–47500	43 – 55
99530–08012	17 – 6
99530–14016	8 – 30