YAMAHA

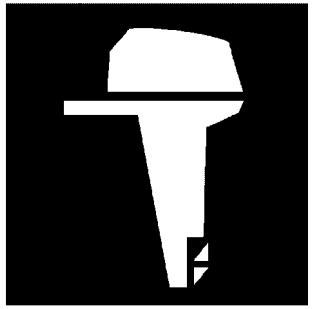

# PARTS CATALOGUE
# CATALOGUE DE PIECES DETACHEES

# F200B
# LF200B

YAMAHA
GENUINE
Parts & Accessories

1X6DA-300FA

( )

F200B/LF200B
PARTS CATALOGUE
©2023 by Yamaha Motor Co., Ltd.
1st edition, May 2023
All rights reserved.
Any reprinting or unauthorized use
without the written permission of
Yamaha Motor Co., Ltd.
is expressly prohibited.
Printed in Japan.

F200B/LF200B
CATALOGUE DE PIECES DETACHEES
©2023 par Yamaha Motor Co., Ltd.
1re édition, mai 2023
Tous droits réservés
Toute réimpression ou utilisation
non autorisée sans la permission écrite
de la Yamaha Motor Co., Ltd.
est formellement interdite.
Imprimé au Japon

# FOREWORD

This Parts Catalogue is related to the parts for the model(s) on the cover page. When you are ordering replacement parts, please refer to this Parts Catalogue and quote both part numbers and part names correctly.

1. Modifications or additions which have been made after the issue of the Parts Catalogue will be announced in the Parts News.
   It is advisable that you make the necessary corrections to the Parts Catalogue according to the Parts News.

2. Abbreviations
   The following abbreviations are used in this Parts Catalogue.
   "UR" Use specified parts number.
   "UN" Use as many as needed.
   "AP" Alternate Parts
   "LM" Locally Made (Parts need to be ordered locally)
   "F#" Frame No. (Applicable machine No.)
   "O/S" Over Size

3. The number of components for assembly
   - Parts, which are to be supplied in an assembly, are listed with a dot (.) in front of the part name as shown below.
   - The numeral appearing to the right of each component part indicates the quantity of parts for each assembly unit.

| PART NO. | DESCRIPTION | Q'TY | REMARKS |
|---|---|---|---|
| 2F5–83310–60 | FRONT FLASHER LIGHT ASSY | 2 | |
| 115–83311–60 | .BULB (6V–18W) | 1 | |

4. Applicable colours of graphics are represented in the "REMARKS" as shown below.

| PART NO. | DESCRIPTION | Q'TY | REMARKS |
|---|---|---|---|
| 2N4–24110–00–X5 | FUEL TANK COMP. | 2 | MXR |
| 3J1–24240–10 | .GRAPHIC, FUEL TANK | 1 | FOR MXR |

5. Note that the illustrations for reference in finding parts numbers are not to be used for assembling. When assembling, please use the applicable service manual.

6. The asterisk (*) before a reference number indicates modified items after the first edition.

7. Applicable Serial No.
   Engine Serial No.

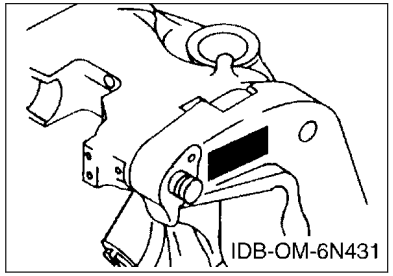


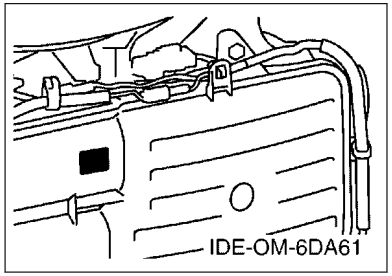


8. Applicable Engine Starting Serial No.

| Model | Serial No. | Model | Serial No. |
|---|---|---|---|
| F200B | 6DA-1071466 | LF200B | 6DB-1004939 |
| | | | |
| | | | |
| | | | |
| | | | |

9. Applicable Colour Code

| Abbreviation | Colour Name | Colour Code |
|---|---|---|
| DBN1 | DARK BLUISH GRAY 1 | 008D |

10. Quantity Column Information

| Column No. | Name Of Q'ty Column | Applicable Model |
|---|---|---|
| 1 | 6DAB | F200B |
| 2 | 6DBB | LF200B |
| | | |
| | | |
| | | |

# AVANT–PROPOS

Ce catalogue de pièces détachées concerne les pièces pour le(s) modèle(s) indiqué(s) sur la page de couverture. Lorsque vous commandez des pièces de rechange, veuillez vous référer à ce catalogue de pieces détachées et indiquer clairement les numéros et les noms des pièces détachées.

1. Les modifications ou ajouts ayant été effectués après la parution du catalogue de pièces détachées seront décrits dans les Bulletins d'information concernant les pièces détachées.
   Il est recommandé que vous apportiez les corrections nécessaires au catalogue des pièces détachées en vous référant aux Bulletins d'information.

2. Abréviations
   Dans ce catalogue, les abréviations suivantes sont utilisées:
   "UR" Utiliser le numéro de pièces spécifié.
   "UN" Utiliser autant que nécessaire.
   "AP" Pièces de substitution
   "LM" Fabrication locale (les pièces doivent être commandées localement.)
   "F#" N° de cadre (applicable au N° de série)
   "O/S" Surdimensionné

3. Nombre de pièces d'un assemblage
   - Les pièces fournies comme composants d'un assemblage sont précédées d'un point (.) de la manière indiquée ci–dessous.
   - Le chiffre apparaissant à la droite de chaque composant indique la quantité de pièces pour chaque unité d'assemblage.

| N° PIECES | DESCRIPTION | QTE | REMARQUES |
|---|---|---|---|
| 2F5–83310–60 | ENS. CLIGNOTANT AVANT | 2 | |
| 115–83311–60 | .AMPOULE (6V–18W) | 1 | |

4. Les couleurs concernant les graphiques sont indiquées dans la colonne "REMARQUES", comme indiqué ci–dessous.

| N° PIECES | DESCRIPTION | QTE | REMARQUES |
|---|---|---|---|
| 2N4–24110–00–X5 | RESERVOIR A ESSENCE. | 2 | MXR |
| 3J1–24240–10 | .GRAPHIQUE | 1 | POUR MXR |

5. Veuillez noter que les illustrations sont indiquées à titre de référence pour trouver les numéros de pièces, non pour être utilisées lors de l'assemblage. Lors de l'assemblage, veuillez utiliser le manuel d'entretien adéquat.

6. L'astérisque (*) placé devant un numéro de référence indique des éléments qui ont été modifiés après la première édition.

7. N° de série applicable
   N° de Série du moteur

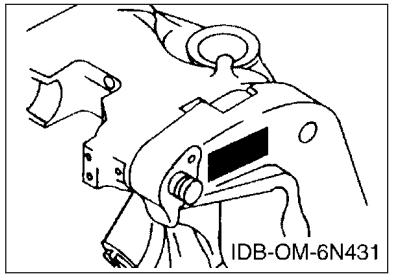


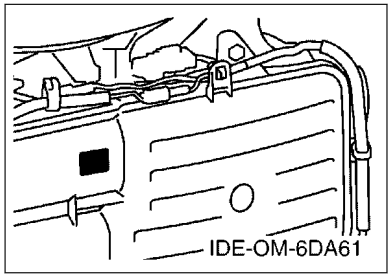


8. N° de série initial du moteur applicable

| Modèle | N° de série | Modèle | N° de série |
|---|---|---|---|
| F200B | 6DA-1071466 | LF200B | 6DB-1004939 |
| | | | |
| | | | |
| | | | |
| | | | |

9. Code couleur applicable

| Abréviation | Nom de la couleur | Code couleur |
|---|---|---|
| DBN1 | DARK BLUISH GRAY 1 | 008D |

10. Informations relatives à la colonne Quantité

| N° de la colonne | Nom de la colonne Qté | Modèle applicable |
|---|---|---|
| 1 | 6DAB | F200B |
| 2 | 6DBB | LF200B |
| | | |
| | | |
| | | |

# CONTENTS

SCHEDULED SERVICE PARTS....1
TOP COWLING....2
CYLINDER & CRANKCASE 1....3
CRANKSHAFT & PISTON....5
CYLINDER & CRANKCASE 2....6
CYLINDER & CRANKCASE 3....7
CYLINDER & CRANKCASE 4....9
VALVE....10
INTAKE 1....13
INTAKE 2....14
INTAKE 3....16
FUEL INJECTION PUMP 1....17
FUEL INJECTION PUMP 2....19
FUEL 1....20
FUEL 2....22
GENERATOR....23
ELECTRICAL 1....25
ELECTRICAL 2....27
ELECTRICAL 3....28
ELECTRICAL 4....29
ELECTRICAL 5....30
STARTING MOTOR....31
BOTTOM COWLING 1....32
BOTTOM COWLING 2....34
BOTTOM COWLING 3....35
CONTROL....36
BRACKET 1....38
BRACKET 2....40
POWER TRIM & TILT ASSY 1....42
POWER TRIM & TILT ASSY 2....45
UPPER CASING....46
OIL PAN....48
LOWER CASING & DRIVE 1....49
LOWER CASING & DRIVE 2....53
LOWER CASING & DRIVE 3....54
LOWER CASING & DRIVE 4....58
STEERING GUIDE ATTACHMENT 1....59
STEERING GUIDE ATTACHMENT 2....60
OPTIONAL PARTS 1....61
OPTIONAL PARTS 2....62
REPAIR KIT 1....63
REPAIR KIT 2....64

## INDEX

NUMERICAL INDEX....66

# TABLE DES MATIERES

PIECES MAINTENANCE PERIODIQUE.....1
CAPOT SUPERIEUR..... 2
CYLINDRE & CARTER 1..... 3
VILEBREQUIN & PISTON.....5
CYLINDRE & CARTER 2..... 6
CYLINDRE & CARTER 3..... 7
CYLINDRE & CARTER 4..... 9
SOUPAPE..... 10
ADMISSION 1.....13
ADMISSION 2.....14
ADMISSION 3.....16
POMPE A INJECTEUR 1..... 17
POMPE A INJECTEUR 2..... 19
CARBURANT 1..... 20
CARBURANT 2..... 22
GENERATRICE.....23
PARTIE ELECTRIQUE 1.....25
PARTIE ELECTRIQUE 2.....27
PARTIE ELECTRIQUE 3.....28
PARTIE ELECTRIQUE 4.....29
PARTIE ELECTRIQUE 5.....30
DEMARREUR ELECTRIQUE.....31
CAPOT INFERIEUR 1.....32
CAPOT INFERIEUR 2.....34
CAPOT INFERIEUR 3.....35
COMMANDE..... 36
SUPPORT 1..... 38
SUPPORT 2..... 40
PUISSANCE PARER ET INCLINER 1..... 42
PUISSANCE PARER ET INCLINER 2..... 45
FOURREAU.....46
VENTILATEUR D'HUILE..... 48
BOITIER D'HELICE TRANSMISSION1.....49
BOITIER D HELICE TRANSMISSION2..... 53
BOITIER D'HELICE TRANSMISSION3.....54
BOITIER D'HELICE TRANSMISSION4.....58
DIRECTION GUIDE ACCESSOIRE 1.....59
DIRECTION GUIDE ACCESSOIRE 2.....60
PIECES OPTIONNELLES 1.....61
PIECES OPTIONNELLES 2.....62
KITS DE REPARATION 1..... 63
KITS DE REPARATION 2..... 64

## INDEX

INDEX NUMERIQUE.....66

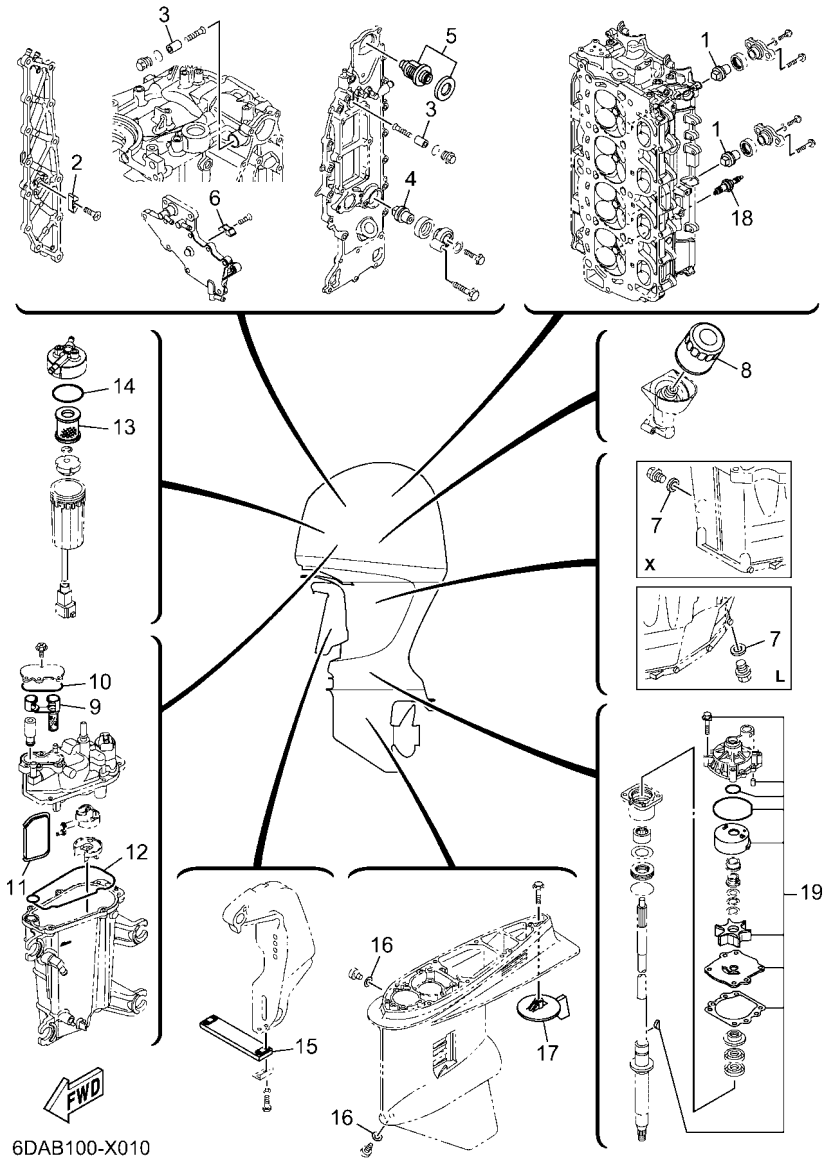

6DAB100-X010

## FIG. 1 SCHEDULED SERVICE PARTS — PIECES MAINTENANCE PERIODIQUE

| REF. NO. | PART NO. N° PIECES | DESCRIPTION DESCRIPTION | 6DAB | 6DBB | | | | REMARKS REMARQUES |
|---|---|---|---|---|---|---|---|---|
| 1 | 67F–11325–01 | ANODE<br>ANODE | 2 | 2 | | | | |
| 2 | 6E5–11325–00 | ANODE<br>ANODE | 1 | 1 | | | | |
| 3 | 68T–11325–00 | ANODE<br>ANODE | 2 | 2 | | | | |
| 4 | 67F–11325–01 | ANODE<br>ANODE | 1 | 1 | | | | |
| 5 | 6DA–12411–01 | THERMOSTAT<br>THERMOSTAT | 1 | 1 | | | | |
| 6 | 6E5–11325–00 | ANODE<br>ANODE | 1 | 1 | | | | |
| 7 | 90430–14M09 | GASKET<br>JOINT | 1 | 1 | | | | |
| 8 | 69J–13440–04 | ELEMENT ASSY, OIL CLEANER<br>ELEMENT, FILTRE A HUILE | 1 | 1 | | | | |
| 9 | 6CB–24501–01 | FILTER, FUEL<br>FILTRE | 1 | 1 | | | | |
| 10 | 6CB–13016–00 | O-RING<br>JOINT TORIQUE | 1 | 1 | | | | |
| 11 | 6LH–13915–00 | FILTER<br>FILTRE | 1 | 1 | | | | |
| 12 | 6CB–14984–00 | GASKET, FLOAT CHAMBER<br>JOINT, CUVE DE FLOTTEUR | 1 | 1 | | | | |
| 13 | 6P3–24563–02 | ELEMENT, FILTER<br>ELEMENT, FILTRE | 1 | 1 | | | | |
| 14 | 6P3–24564–00 | GASKET<br>JOINT | 1 | 1 | | | | |
| 15 | 6AW–45251–00 | ANODE<br>ANODE | 1 | 1 | | | | |
| 16 | 90430–08003 | GASKET<br>JOINT | 2 | 2 | | | | |
| 17 | 6J9–45371–01 | TAB-TRIM<br>ANODE DERIVE | 1 | | | | | |
| | 6K1–45371–02 | TAB-TRIM<br>ANODE DERIVE | | 1 | | | | |
| 18 | 94702–00400 | PLUG, SPARK (NGK LFR6A-11)<br>BOUGIE D'ALLUMAGE(NGK LFR6A-11 | 4 | 4 | | | | |
| 19 | 61A–W0078–A4 | WATER PUMP REPAIR KIT<br>KIT DE REPARATION DE LA POMPE | 1 | 1 | | | | |

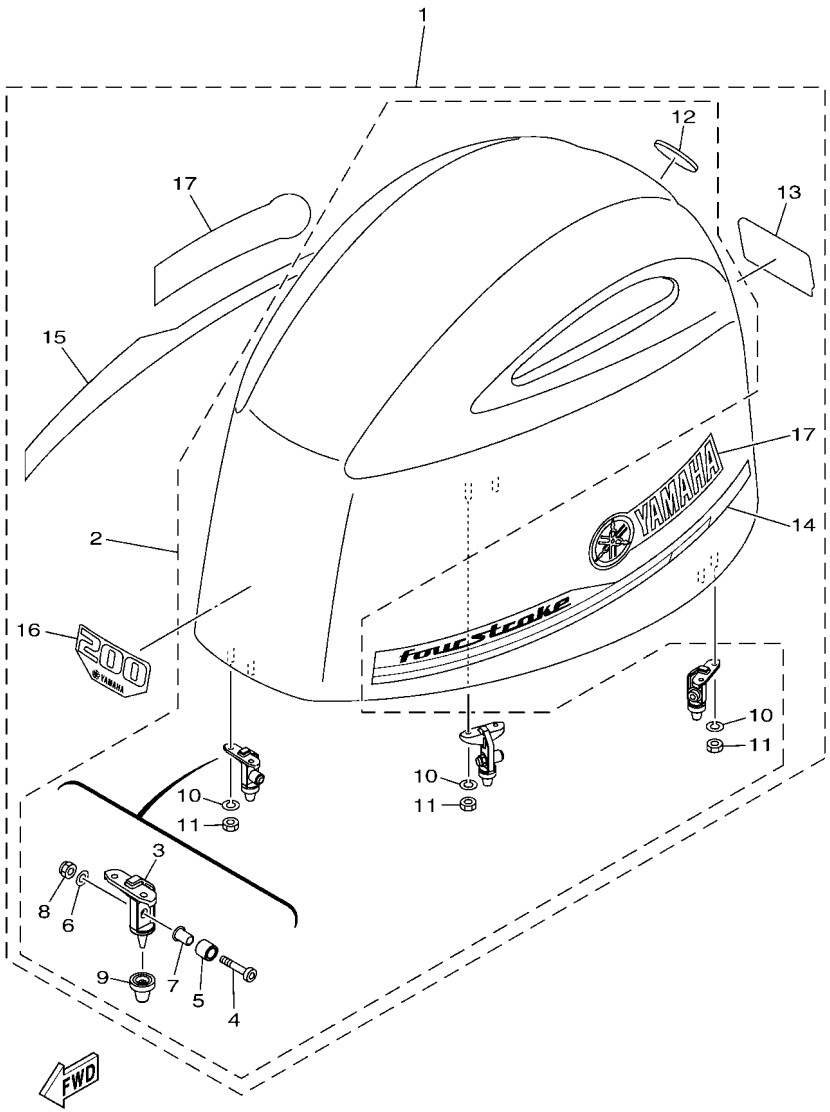


6DA5100-R020

## FIG. 2 TOP COWLING — CAPOT SUPERIEUR

| REF. NO. | PART NO. N° PIECES | DESCRIPTION DESCRIPTION | 6DAB | 6DBB | | | | REMARKS REMARQUES |
|---|---|---|---|---|---|---|---|---|
| 1 | 6DA–42610–03 | TOP COWLING ASSY<br>CAPOT (ENS.) | 1 | 1 | | | | |
| 2 | 6DA–4261A–03 | .TOP COWLING W/O GRAPHICS<br>.CAPOT SUPERIEUR SANS GRAPHIQUE | 1 | 1 | | | | |
| 3 | 6CB–42647–A0 | ..HOLDER, CLAMP BAND<br>..SUPPORT, SANDOW DE SERRAGE | 3 | 3 | | | | |
| 4 | 90111–08078 | ..BOLT, HEXAGON SOCKET BUTTON<br>..BOULON | 3 | 3 | | | | |
| 5 | 90387–10094 | ..COLLAR<br>..COLLERETTE | 3 | 3 | | | | |
| 6 | 92990–08600 | ..WASHER, PLATE<br>..RONDELLE, PLATE | 3 | 3 | | | | |
| 7 | 90387–08M45 | ..COLLAR<br>..COLLERETTE | 3 | 3 | | | | |
| 8 | 95780–08300 | ..NUT, FLANGE<br>..ECROU | 3 | 3 | | | | |
| 9 | 6AW–42663–01 | ..DAMPER 2<br>..AMORTISSEUR 2 | 3 | 3 | | | | |
| 10 | 92990–06100 | ..WASHER, SPRING<br>..RONDELLE, GROWER | 6 | 6 | | | | |
| 11 | 95380–06600 | ..NUT, HEXAGON<br>..ECROU | 6 | 6 | | | | |
| 12 | 6DA–42697–00 | ..TUNING FORK MARK<br>..MARQUE, YAMAHA | 1 | 1 | | | | |
| 13 | 6DA–42678–00 | .GRAPHIC, REAR<br>.ADHESIF, ARRIERE | 1 | 1 | | | | |
| 14 | 6DA–42675–00 | .GRAPHIC, SIDE 1<br>.EMBLEME | 1 | 1 | | | | |
| 15 | 6DA–42676–00 | .GRAPHIC, SIDE 2<br>.EMBLEME | 1 | 1 | | | | |
| 16 | 6DA–42677–00 | .GRAPHIC, FRONT<br>.ADHESIF, AVANT | 1 | 1 | | | | |
| 17 | 63P–42681–20 | .MARK, COWLING<br>.ADHESIF, CAPOT | 2 | 2 | | | | |

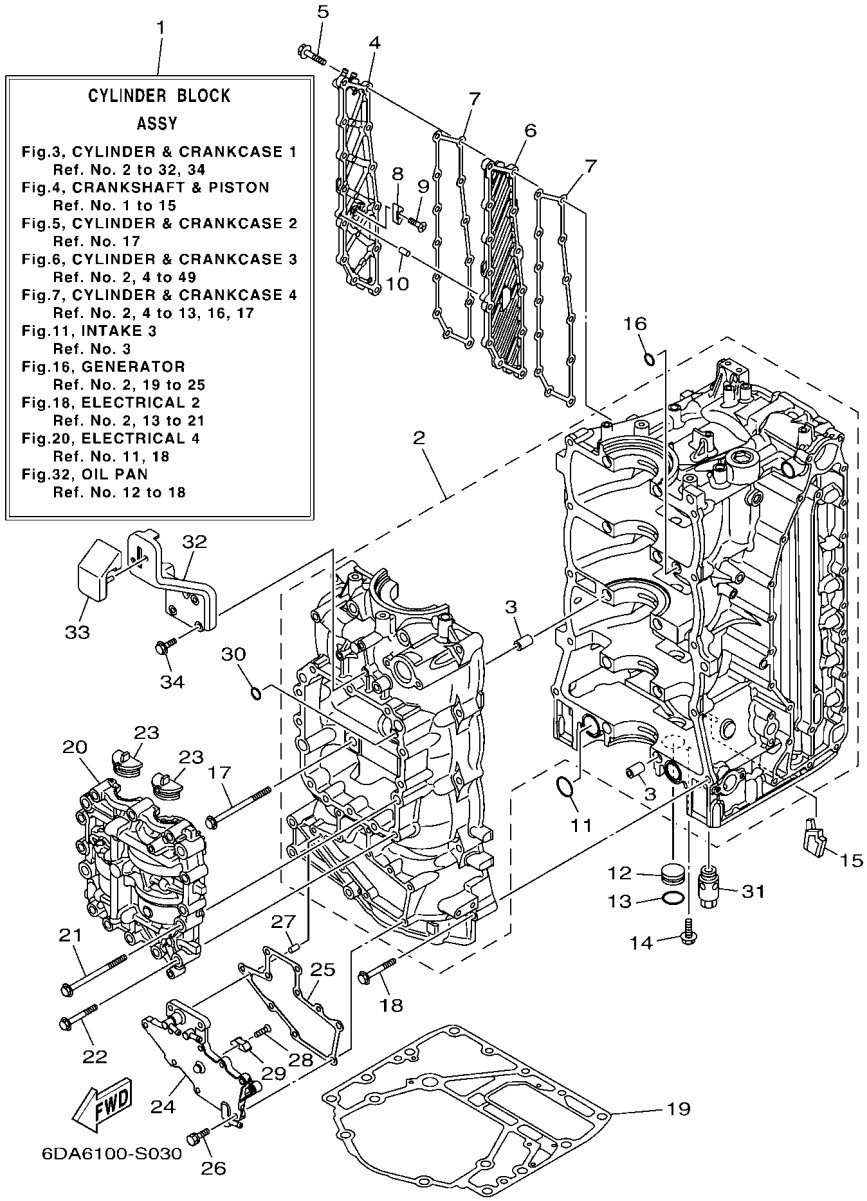


## FIG. 3 CYLINDER & CRANKCASE 1 — CYLINDRE & CARTER 1

| REF. NO. | PART NO. N° PIECES | DESCRIPTION DESCRIPTION | 6DAB | 6DBB | | | | REMARKS REMARQUES |
|---|---|---|---|---|---|---|---|---|
| 1 | 6DA–W009B–13–9S | CYLINDER BLOCK ASSY<br>CYLINDRE GROUPE (ENS.) | 1 | 1 | | | | |
| 2 | 6DA–15109–01–9S | CRANKCASE ASSY<br>CARTER DE MOTEUR COMPLET | 1 | 1 | | | | |
| 3 | 91814–18002 | .PIN, DOWEL<br>.GOUJON, D'ASSEMBLAGE | 10 | 10 | | | | |
| 4 | 6DA–15414–00–9S | COVER 1<br>COUVERCLE 1 | 1 | 1 | | | | |
| 5 | 90105–06028 | BOLT, FLANGE<br>BOULON, A COLLERETTE | 13 | 13 | | | | |
| 6 | 6DA–15423–00–9S | COVER 2<br>COUVERCLE 2 | 1 | 1 | | | | |
| 7 | 6DA–15353–01 | GASKET, DRAIN<br>JOINT, PLOT DE VIDANGE | 2 | 2 | | | | |
| 8 | 6E5–11325–00 | ANODE<br>ANODE | 1 | 1 | | | | |
| 9 | 98780–04016 | SCREW, FLAT HEAD<br>VIS A TETE FRAISEE | 1 | 1 | | | | |
| 10 | 91690–40010 | PIN, SPRING<br>AGRAFFE | 1 | 1 | | | | |
| 11 | 93210–25552 | O-RING<br>JOINT TORIQUE | 2 | 2 | | | | |
| 12 | 90338–25004 | PLUG<br>PLOT | 1 | 1 | | | | |
| 13 | 93210–25647 | O-RING<br>JOINT TORIQUE | 1 | 1 | | | | |
| 14 | 90119–06276 | BOLT, WITH WASHER<br>BOULON, AVEC RONDELLE | 1 | 1 | | | | |
| 15 | 6DA–14664–01 | GROMMET, WATER SHUT<br>PASSE-FIL | 1 | 1 | | | | |
| 16 | 93210–12648 | O-RING<br>JOINT TORIQUE | 1 | 1 | | | | |
| 17 | 90105–10406 | BOLT, FLANGE<br>BOULON, A COLLERETTE | 10 | 10 | | | | |
| 18 | 90119–08M66 | BOLT, WITH WASHER<br>BOULON, AVEC RONDELLE | 10 | 10 | | | | |
| 19 | 63P–11351–03 | GASKET, CYLINDER<br>JOINT, D'EMBASE | 1 | 1 | | | | |
| 20 | 6DA–11500–00 | BALANCER ASSY<br>ARBRE D'EQUILIBRAGE COMPLET | 1 | 1 | | | | |
| 21 | 90105–10406 | BOLT, FLANGE<br>BOULON, A COLLERETTE | 4 | 4 | | | | |
| 22 | 90105–08175 | BOLT, FLANGE<br>BOULON, A COLLERETTE | 12 | 12 | | | | |
| 23 | 63P–11512–00 | SEAL, CRANK COVER<br>JOINT, COUV DE VILEBREQUIN | 2 | 2 | | | | |
| 24 | 6DA–15411–00–9S | COVER, CRANKCASE 1<br>COUVERCLE 1, CARTER MOTEUR | 1 | 1 | | | | |
| 25 | 6DA–15451–01 | GASKET, CRANKCASE COVER 1<br>JOINT, COUVERCLE DE CARTER 1 | 1 | 1 | | | | |
| 26 | 90119–06MA3 | BOLT, WITH WASHER<br>BOULON, AVEC RONDELLE | 10 | 10 | | | | |
| 27 | 91690–40010 | PIN, SPRING<br>AGRAFFE | 1 | 1 | | | | |

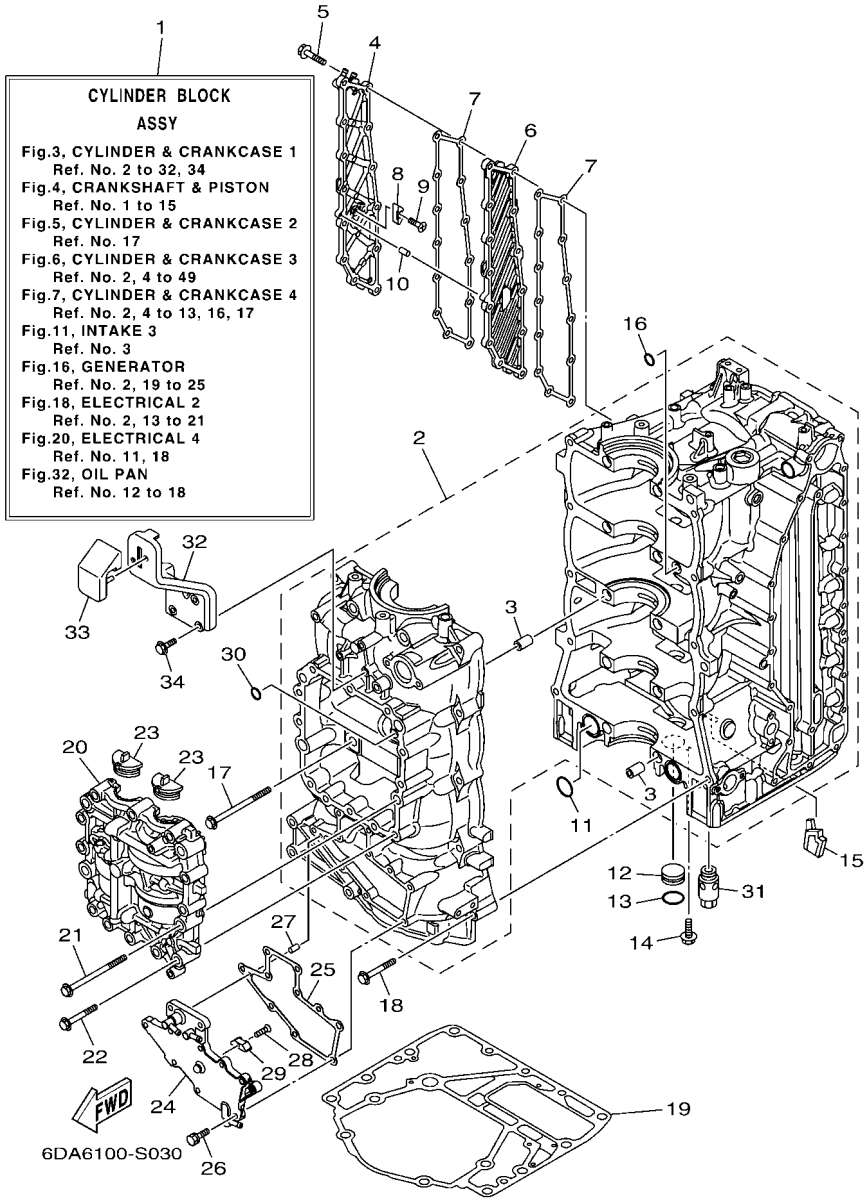


## FIG. 3 CYLINDER & CRANKCASE 1 — CYLINDRE & CARTER 1

| REF. NO. | PART NO. N° PIECES | DESCRIPTION DESCRIPTION | 6DAB | 6DBB | | | | REMARKS REMARQUES |
|---|---|---|---|---|---|---|---|---|
| 28 | 98780–04016 | SCREW, FLAT HEAD<br>VIS A TETE FRAISEE | 1 | 1 | | | | |
| 29 | 6E5–11325–00 | ANODE<br>ANODE | 1 | 1 | | | | |
| 30 | 93210–08001 | O-RING<br>JOINT TORIQUE | 1 | 1 | | | | |
| 31 | 63P–13490–00 | RELIEF VALVE ASSY<br>SOUPAPE DE SECURITE COMPLET | 1 | 1 | | | | |
| 32 | 6DA–42744–00 | STAY<br>SUPPORT | 1 | 1 | | | | |
| 33 | 6DA–42662–01 | DAMPER<br>AMORTISSEUR | 1 | 1 | | | | |
| 34 | 90105–06196 | BOLT, FLANGE<br>BOULON, A COLLERETTE | 3 | 3 | | | | |

## FIG. 4 CRANKSHAFT & PISTON — VILEBREQUIN & PISTON

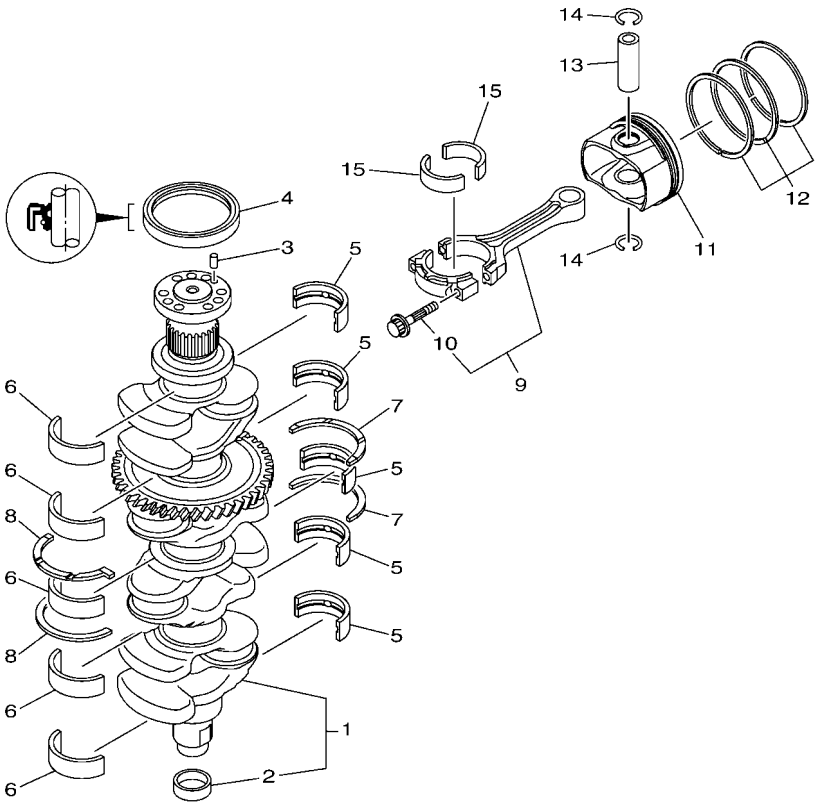


6EH8100-U040

| REF. NO. | PART NO. N° PIECES | DESCRIPTION DESCRIPTION | 6DAB | 6DBB | | | | REMARKS REMARQUES |
|---|---|---|---|---|---|---|---|---|
| 1 | 6DA–11410–00 | CRANKSHAFT<br>VILEBREQUIN COMPLET | 1 | 1 | | | | |
| 2 | 6CB–11478–00 | .COLLAR<br>.COLLERETTE | 1 | 1 | | | | |
| 3 | 93606–12019 | PIN, DOWEL<br>GOUPILLE | 1 | 1 | | | | |
| 4 | 93102–85008 | OIL SEAL<br>JOINT SPY | 1 | 1 | | | | |
| 5 | 6DA–11416–00 | PLANE BEARING, CRANKSHAFT 1<br>COUSSINET DE VILEBREQUIN 1 | 5 | 5 | | | | UR YELLOW<br>UR YELLOW |
| | 6DA–11416–10 | PLANE BEARING, CRANKSHAFT 1<br>COUSSINET DE VILEBREQUIN 1 | 5 | 5 | | | | UR GREEN<br>UR GREEN |
| | 6DA–11416–20 | PLANE BEARING, CRANKSHAFT 1<br>COUSSINET DE VILEBREQUIN 1 | 5 | 5 | | | | UR BLUE<br>UR BLUE |
| 6 | 6DA–11417–00 | PLANE BEARING, CRANKSHAFT 2<br>COUSSINET DE VILEBREQUIN 2 | 5 | 5 | | | | UR YELLOW<br>UR YELLOW |
| | 6DA–11417–10 | PLANE BEARING, CRANKSHAFT 2<br>COUSSINET DE VILEBREQUIN 2 | 5 | 5 | | | | UR GREEN<br>UR GREEN |
| | 6DA–11417–20 | PLANE BEARING, CRANKSHAFT 2<br>COUSSINET DE VILEBREQUIN 2 | 5 | 5 | | | | UR BLUE<br>UR BLUE |
| 7 | 6DA–11426–00 | BEARING, THRUST 1<br>ROULEMENT DE BUTEE 1 | 2 | 2 | | | | |
| 8 | 6DA–11427–00 | BEARING, THRUST 2<br>ROULEMENT DE BUTEE 2 | 2 | 2 | | | | |
| 9 | 6CB–W1165–10 | CONNECTING ROD ASSY<br>BIELLE COMPLETTE | 4 | 4 | | | | |
| 10 | 63P–11654–10 | .BOLT, CONNECTING ROD<br>.BOULON, BIELLE | 2 | 2 | | | | |
| 11 | 6DA–11631–21–94 | PISTON (STD)<br>PISTON (STD) | 4 | 4 | | | | |
| 12 | 6CB–11603–00 | PISTON RING SET (STD)<br>JEU DE SEGMENTS (STD) | 4 | 4 | | | | |
| 13 | 6CB–11633–00 | PIN, PISTON<br>AXE, PISTON | 4 | 4 | | | | |
| 14 | K0F–A3233–00 | RING,HOLE SNAP<br>JONC | 8 | 8 | | | | |
| 15 | 6JD–11656–00 | PLANE BEARING, CONNECTING ROD<br>ROULEMENT DE BIELLE | 8 | 8 | | | | UR BLACK<br>UR BLACK |
| | 6JD–11656–10 | PLANE BEARING, CONNECTING ROD<br>ROULEMENT DE BIELLE | 8 | 8 | | | | UR PINK<br>UR PINK |
| | 6JD–11656–20 | PLANE BEARING, CONNECTING ROD<br>ROULEMENT DE BIELLE | 8 | 8 | | | | UR RED<br>UR RED |

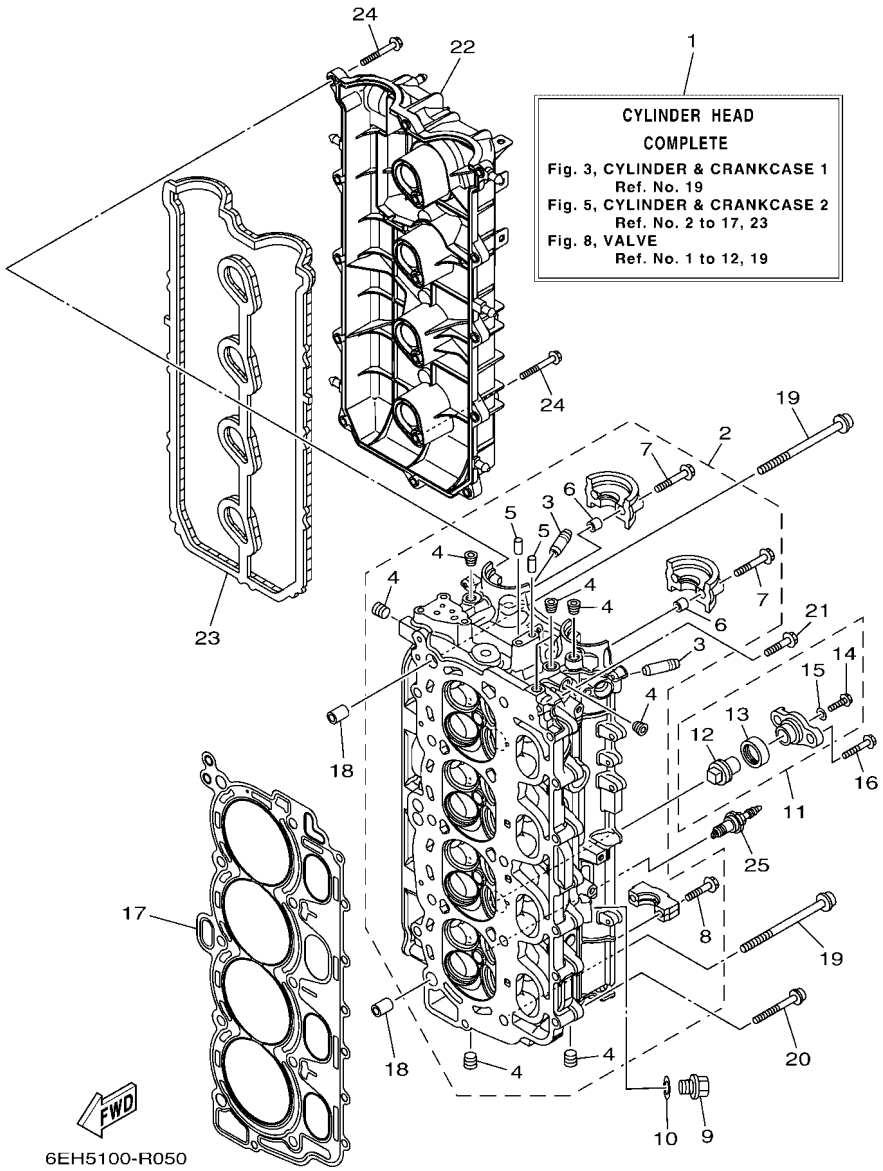


## FIG. 5 CYLINDER & CRANKCASE 2 — CYLINDRE & CARTER 2

| REF. NO. | PART NO. N° PIECES | DESCRIPTION DESCRIPTION | 6DAB | 6DBB | | | | REMARKS REMARQUES |
|---|---|---|---|---|---|---|---|---|
| 1 | 6DA–W009A–03–9S | CYLINDER HEAD COMPLETE<br>CULASSE (ENS.) | 1 | 1 | | | | |
| 2 | 6DA–11110–02–9S | CYLINDER HEAD ASSY<br>JEU DE CULASSE | 1 | 1 | | | | |
| 3 | 6DA–11133–10 | .GUIDE, VALVE 1<br>.GUIDE, SOUPAPE 1 | 16 | 16 | | | | |
| 4 | 90344–51019 | .PLUG, TAPER SCREW<br>.PLOT, FILETE CONIQUE | 8 | 8 | | | | |
| 5 | 93606–12019 | .PIN, DOWEL<br>.GOUPILLE | 2 | 2 | | | | |
| 6 | 91809–08006 | .PIN, DOWEL<br>.GOUJON, D'ASSEMBLAGE | 4 | 4 | | | | |
| 7 | 90119–07001 | .BOLT, WITH WASHER<br>.BOULON, AVEC RONDELLE | 4 | 4 | | | | |
| 8 | 90119–07234 | .BOLT, WITH WASHER<br>.BOULON, AVEC RONDELLE | 16 | 16 | | | | |
| 9 | 90340–14M06 | PLUG, STRAIGHT SCREW<br>PLOT, FILETE DROIT | 1 | 1 | | | | |
| 10 | 90430–14115 | GASKET<br>JOINT | 1 | 1 | | | | |
| 11 | 67F–11301–01 | ANODE COVER ASSY<br>COUVERCLE ANODE (ENS.) | 2 | 2 | | | | |
| 12 | 67F–11325–01 | .ANODE<br>.ANODE | 1 | 1 | | | | |
| 13 | 67F–11328–01 | .GROMMET, ANODE<br>.PASSE-FIL | 1 | 1 | | | | |
| 14 | 90105–06M07 | .BOLT, FLANGE<br>.BOULON, A COLLERETTE | 1 | 1 | | | | |
| 15 | 90430–06M03 | .GASKET<br>.JOINT | 1 | 1 | | | | |
| 16 | 95D95–08025 | BOLT, FLANGE DEEP RECESS<br>BOULON FIXATION | 4 | 4 | | | | |
| 17 | 6DA–11181–00 | GASKET, CYLINDER HEAD 1<br>JOINT, DE CULASSE 1 | 1 | 1 | | | | |
| 18 | 90387–11005 | COLLAR<br>COLLERETTE | 2 | 2 | | | | |
| 19 | 90149–11001 | SCREW<br>VIS | 10 | 10 | | | | |
| 20 | 90105–08175 | BOLT, FLANGE<br>BOULON, A COLLERETTE | 8 | 8 | | | | |
| 21 | 90105–06151 | BOLT, FLANGE<br>BOULON, A COLLERETTE | 1 | 1 | | | | |
| 22 | 6DA–11191–00 | COVER, CYLINDER HEAD 1<br>COUVERCLE, CULASSE 1 | 1 | 1 | | | | |
| 23 | 6DA–11193–00 | GASKET, HEAD COVER 1<br>JOINT, COUVERCLE DE CULASSE 1 | 1 | 1 | | | | |
| 24 | 95D95–06030 | BOLT, FLANGE DEEP RECESS<br>BOULON FIXATION | 16 | 16 | | | | |
| 25 | 94702–00400 | PLUG, SPARK (NGK LFR6A-11)<br>BOUGIE D'ALLUMAGE(NGK LFR6A-11 | 4 | 4 | | | | |

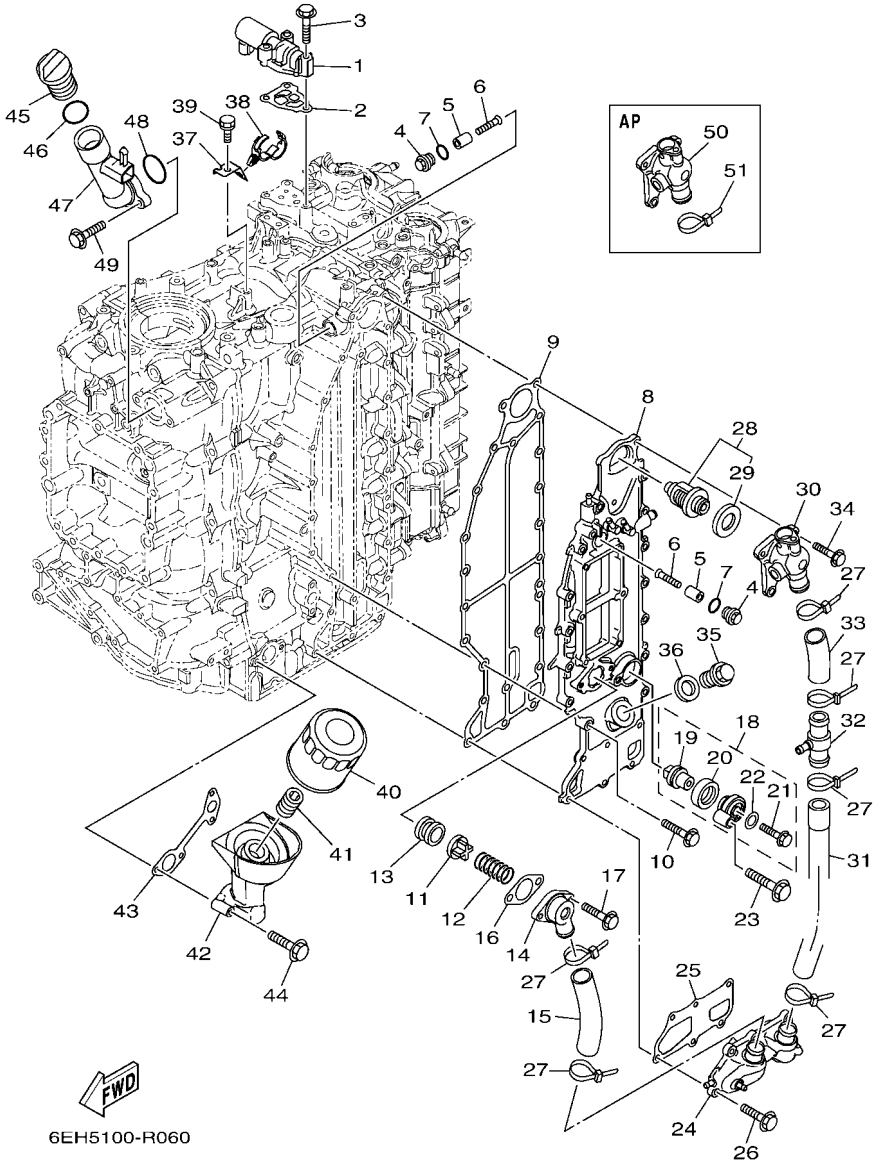


## FIG. 6 CYLINDER & CRANKCASE 3 — CYLINDRE & CARTER 3

| REF. NO. | PART NO. N° PIECES | DESCRIPTION DESCRIPTION | 6DAB | 6DBB | | | | REMARKS REMARQUES |
|---|---|---|---|---|---|---|---|---|
| 1 | 6CB–86120–00 | SOLENOID VALVE ASSY<br>SOLENOIDE | 1 | 1 | | | | |
| 2 | 6CB–1242F–00 | GASKET, FILTER<br>JOINT, FILTRE | 1 | 1 | | | | |
| 3 | 90105–06035 | BOLT, FLANGE<br>BOULON, A COLLERETTE | 3 | 3 | | | | |
| 4 | 6G8–11197–A0 | PLUG, BLIND<br>PLOT, BORGNE | 2 | 2 | | | | |
| 5 | 68T–11325–00 | ANODE<br>ANODE | 2 | 2 | | | | |
| 6 | 90151–05M05 | SCREW, COUNTERSUNK<br>VIS, TETE NOYEE | 2 | 2 | | | | |
| 7 | 93210–13M63 | O-RING<br>JOINT TORIQUE | 2 | 2 | | | | |
| 8 | 6DA–41113–00–9S | OUTER COVER, EXHAUST<br>COUVERCLE, ECHAPPEMENT | 1 | 1 | | | | |
| 9 | 6DA–41114–01 | GASKET, EXHAUST OUTER COVER<br>JOINT, COUVERCLE D'ECHAPPEMENT | 1 | 1 | | | | |
| 10 | 90105–06028 | BOLT, FLANGE<br>BOULON, A COLLERETTE | 14 | 14 | | | | |
| 11 | 60H–12416–00 | VALVE, PRESSURE CONTROL<br>SOUPAPE DE CONTROLEUR PRESS | 1 | 1 | | | | |
| 12 | 90501–16M11 | SPRING, COMPRESSION<br>RESSORT, COMPRESSION | 1 | 1 | | | | |
| 13 | 90480–20M05 | GROMMET<br>PASSE-FIL | 1 | 1 | | | | |
| 14 | 6G5–11372–00 | COVER, BYPASS 2<br>CONVERCLE | 1 | 1 | | | | |
| 15 | 6DA–1243A–00 | HOSE 1<br>DURITE 1 | 1 | 1 | | | | |
| 16 | 60V–11382–A0 | GASKET 2<br>JOINT 2 | 1 | 1 | | | | |
| 17 | 90119–06MA3 | BOLT, WITH WASHER<br>BOULON, AVEC RONDELLE | 2 | 2 | | | | |
| 18 | 69J–11301–01 | ANODE COVER ASSY<br>COUVERCLE ANODE (ENS.) | 1 | 1 | | | | |
| 19 | 67F–11325–01 | .ANODE<br>.ANODE | 1 | 1 | | | | |
| 20 | 67F–11328–01 | .GROMMET, ANODE<br>.PASSE-FIL | 1 | 1 | | | | |
| 21 | 90105–06M07 | .BOLT, FLANGE<br>.BOULON, A COLLERETTE | 1 | 1 | | | | |
| 22 | 90430–06M03 | .GASKET<br>.JOINT | 1 | 1 | | | | |
| 23 | 97E75–08540 | BOLT, HEXAGON W/W DEEP RECESS<br>VIS HEXAGONAL AVC RONDELLE | 1 | 1 | | | | |
| 24 | 6DA–12527–00–9S | COVER, WATER BY-PASS<br>CACHE, DERIVATHION D'EAU | 1 | 1 | | | | |
| 25 | 6DA–11381–01 | GASKET 1<br>JOINT 1 | 1 | 1 | | | | |
| 26 | 90105–06028 | BOLT, FLANGE<br>BOULON, A COLLERETTE | 6 | 6 | | | | |
| 27 | 90465–11M59 | CLAMP<br>BRIDE | 6 | 6 | | | | |

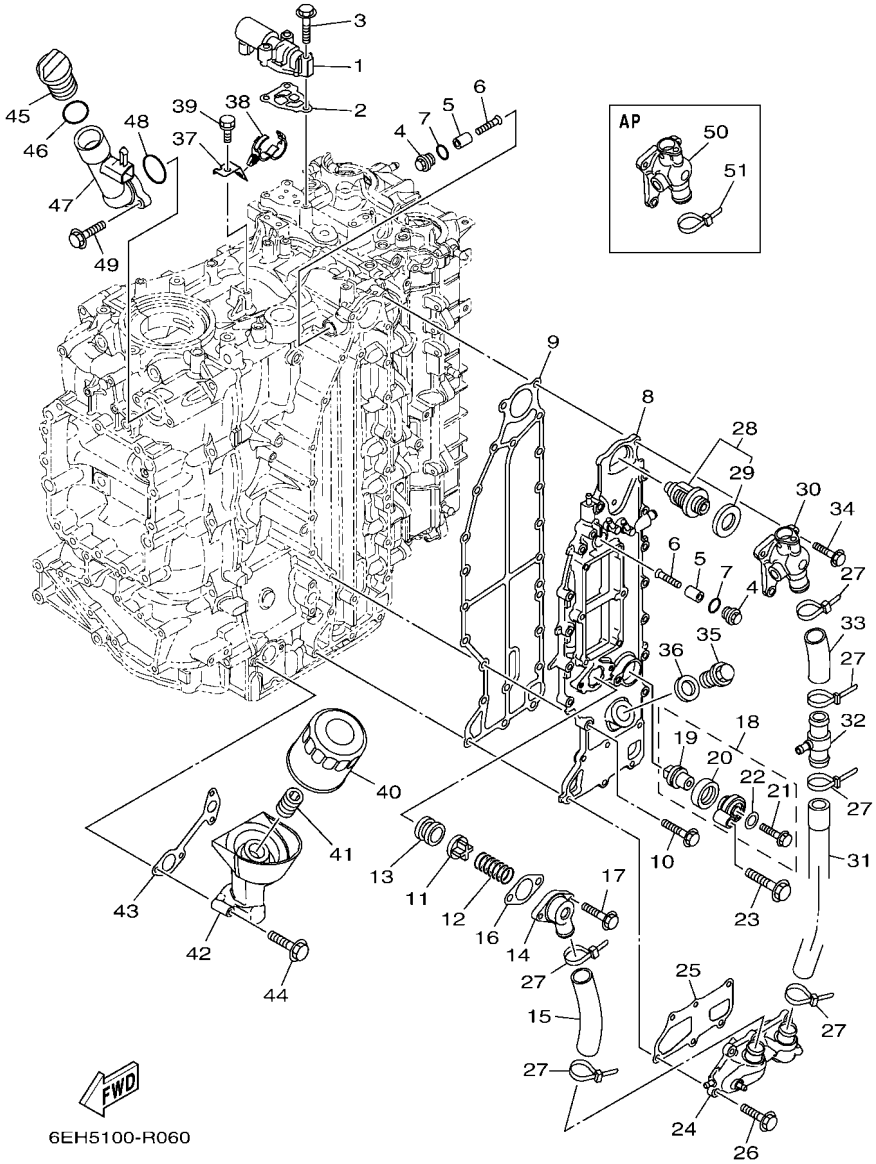


## FIG. 6 CYLINDER & CRANKCASE 3 — CYLINDRE & CARTER 3

| REF. NO. | PART NO. N° PIECES | DESCRIPTION DESCRIPTION | 6DAB | 6DBB | | | | REMARKS REMARQUES |
|---|---|---|---|---|---|---|---|---|
| 28 | 6DA–12411–01 | THERMOSTAT<br>THERMOSTAT | 1 | 1 | | | | |
| 29 | 6AW–12412–00 | .SEAL, THERMOSTAT<br>.JOINT, THERMOSTAT | 1 | 1 | | | | |
| 30 | 6DA–12413–A0–9S | COVER, THERMOSTAT<br>COUVERCLE, THERMOSTAT | 1 | 1 | | | | |
| 31 | 6DA–1243E–00 | HOSE 2<br>DURITE 2 | 1 | 1 | | | | |
| 32 | 6CE–24378–00 | PIPE, JOINT 3<br>DURITE RACCORDEMENT 3 | 1 | 1 | | | | |
| 33 | 6DA–1244H–00 | HOSE 5<br>DURITE 5 | 1 | 1 | | | | |
| 34 | 90105–06028 | BOLT, FLANGE<br>BOULON, A COLLERETTE | 3 | 3 | | | | |
| 35 | 90340–18M09 | PLUG, STRAIGHT SCREW<br>PLOT, FILETE DROIT | 1 | 1 | | | | |
| 36 | 90201–186F1 | WASHER, PLATE<br>RONDELLE, PLATE | 1 | 1 | | | | |
| 37 | 6DA–12491–00 | CLAMP 1<br>COLLIER 1 | 1 | 1 | | | | |
| 38 | 90464–20181 | CLAMP<br>BRIDE | 1 | 1 | | | | |
| 39 | 90119–06078 | BOLT, WITH WASHER<br>BOULON, AVEC RONDELLE | 1 | 1 | | | | |
| 40 | 69J–13440–04 | ELEMENT ASSY, OIL CLEANER<br>ELEMENT, FILTRE A HUILE | 1 | 1 | | | | |
| 41 | 6S5–12858–00 | BOLT, UNION<br>BOULON, RACCORD | 1 | 1 | | | | |
| 42 | 6DA–13446–01 | CONNECTOR<br>CONNECTEUR | 1 | 1 | | | | |
| 43 | 6DA–13475–00 | GASKET<br>JOINT | 1 | 1 | | | | |
| 44 | 90105–06151 | BOLT, FLANGE<br>BOULON, A COLLERETTE | 4 | 4 | | | | |
| 45 | 6G8–15363–00 | PLUG, OIL<br>PLOT, HUILE | 1 | 1 | | | | |
| 46 | 93210–24M79 | O-RING<br>JOINT TORIQUE | 1 | 1 | | | | |
| 47 | 6DA–15319–00 | JOINT<br>JOINT | 1 | 1 | | | | |
| 48 | 93210–357A3 | O-RING<br>JOINT TORIQUE | 1 | 1 | | | | |
| 49 | 90105–06037 | BOLT, FLANGE<br>BOULON, A COLLERETTE | 2 | 2 | | | | |
| 50 | 6DA–1241B–A0–9S | COVER, THERMOSTAT 2<br>COUVERCLE, THERMOSTAT 2 | 1 | 1 | | | | AP WATER TEMP SENSOR<br>AP WATER TEMP SENSOR |
| 51 | 90465–11M59 | CLAMP<br>BRIDE | 1 | 1 | | | | AP WATER TEMP SENSOR<br>AP WATER TEMP SENSOR |

## FIG. 7 CYLINDER & CRANKCASE 4 — CYLINDRE & CARTER 4

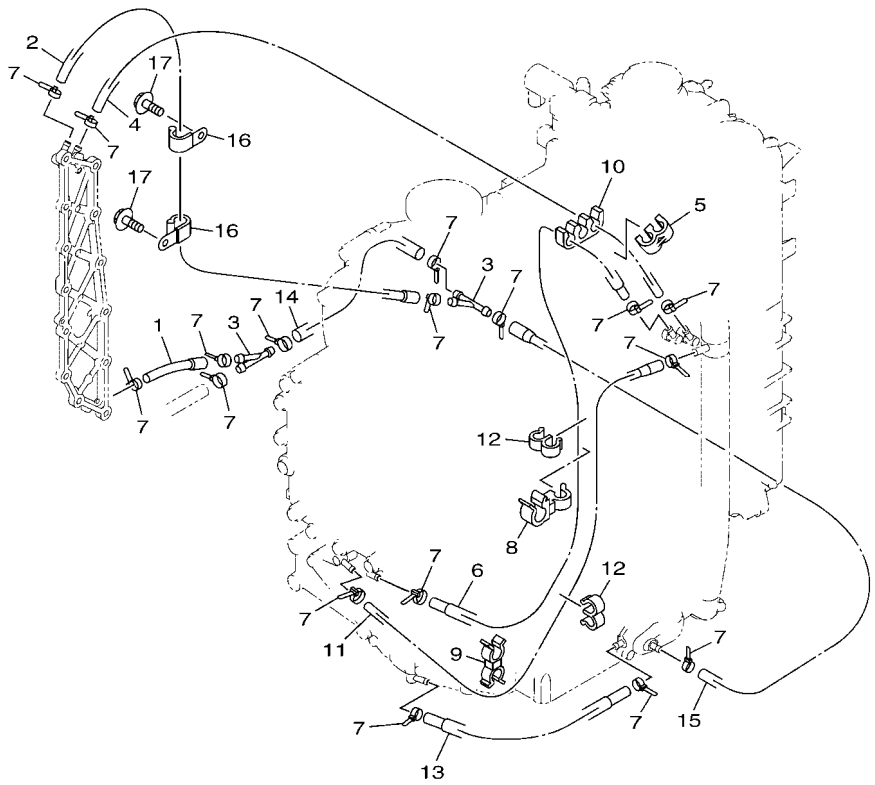


6EH5100-R070

| REF. NO. | PART NO. N° PIECES | DESCRIPTION DESCRIPTION | 6DAB | 6DBB | | | | REMARKS REMARQUES |
|---|---|---|---|---|---|---|---|---|
| 1 | 6DA–12576–00 | HOSE 1<br>TUYAU 1 | 1 | 1 | | | | |
| 2 | 6DA–12589–00 | HOSE 6<br>TUYAU 6 | 1 | 1 | | | | |
| 3 | 6CE–24377–00 | PIPE, JOINT 2<br>DURITE RACCORDEMENT 2 | 2 | 2 | | | | |
| 4 | 90445–09008 | HOSE (L470)<br>DURITE (L470) | 1 | 1 | | | | |
| 5 | 90464–09M21 | CLAMP<br>BRIDE | 1 | 1 | | | | |
| 6 | 6DA–12578–00 | HOSE 3<br>TUYAU 3 | 1 | 1 | | | | |
| 7 | 90465–11M10 | CLAMP<br>BRIDE | 17 | 17 | | | | |
| 8 | 90464–12010 | CLAMP<br>BRIDE | 1 | 1 | | | | |
| 9 | 90464–09142 | CLAMP<br>BRIDE | 1 | 1 | | | | |
| 10 | 90464–09020 | CLAMP<br>BRIDE | 1 | 1 | | | | |
| 11 | 6DA–12579–00 | HOSE 4<br>TUYAU 4 | 1 | 1 | | | | |
| 12 | 90464–09M31 | CLAMP<br>BRIDE | 2 | 2 | | | | |
| 13 | 6DA–12552–00 | HOSE 8<br>DURITE 8 | 1 | 1 | | | | |
| 14 | 90445–10057 | HOSE (L170)<br>DURITE (L170) | 1 | 1 | | | | |
| 15 | 6DA–12589–00 | HOSE 6<br>TUYAU 6 | 1 | 1 | | | | |
| 16 | 90465–08M83 | CLAMP<br>BRIDE | 2 | 2 | | | | |
| 17 | 95D95–06012 | BOLT, FLANGE DEEP RECESS<br>BOULON FIXATION | 2 | 2 | | | | |

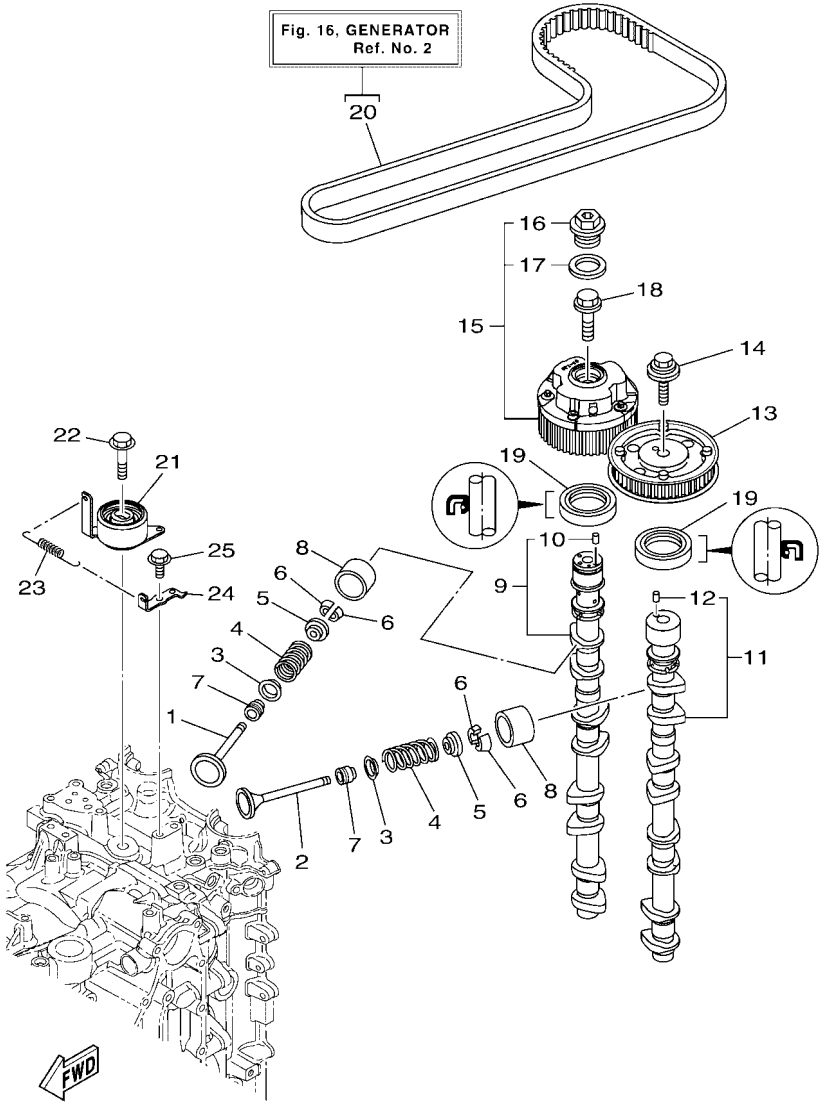


6DA3100-P080

## FIG. 8 VALVE — SOUPAPE

| REF. NO. | PART NO. N° PIECES | DESCRIPTION DESCRIPTION | 6DAB | 6DBB | | | | REMARKS REMARQUES |
|---|---|---|---|---|---|---|---|---|
| 1 | 6CB–12111–00 | VALVE, INTAKE<br>SOUPAPE, ADMISSION | 8 | 8 | | | | |
| 2 | 6DA–12121–00 | VALVE, EXHAUST<br>SOUPAPE, ECHAPPEMENT | 8 | 8 | | | | |
| 3 | K0F–A3743–00 | SEAT, VALVE SPRING<br>SIEGE, RESSORT DE SOUPAPE | 16 | 16 | | | | |
| 4 | 6CB–12113–00 | SPRING, VALVE INNER<br>RESSORT DE SOUPAPE, INTERNE | 16 | 16 | | | | |
| 5 | K0F–A3741–00 | RETAINER, VALVE SPRING<br>BUTEE DE RESSORT DE SOUPAPA | 16 | 16 | | | | |
| 6 | K0F–A3742–00 | LOCK, VALVE SPRING RETAINER<br>FRAISE, SOUPAPE | 32 | 32 | | | | |
| 7 | 51Y–12119–00 | SEAL, VALVE STEM<br>JOINT, QUEUE DE SOUPAPE | 16 | 16 | | | | |
| 8 | K0F–A3751–00 | LIFTER, VALVE (3.000)<br>LEVE-SOUPAPE (3.000) | 16 | 16 | | | | UR<br>UR |
| | K0F–A3751–10 | LIFTER, VALVE (3.025)<br>LEVE-SOUPAPE (3.025) | 16 | 16 | | | | UR<br>UR |
| | K0F–A3751–20 | LIFTER, VALVE (3.050)<br>LEVE-SOUPAPE (3.050) | 16 | 16 | | | | UR<br>UR |
| | K0F–A3751–30 | LIFTER, VALVE (3.075)<br>LEVE-SOUPAPE (3.075) | 16 | 16 | | | | UR<br>UR |
| | K0F–A3751–40 | LIFTER, VALVE (3.100)<br>LEVE-SOUPAPE (3.100) | 16 | 16 | | | | UR<br>UR |
| | K0F–A3751–50 | LIFTER, VALVE (3.122)<br>LEVE-SOUPAPE (3.122) | 16 | 16 | | | | UR<br>UR |
| | K0F–A3751–60 | LIFTER, VALVE (3.142)<br>LEVE-SOUPAPE (3.142) | 16 | 16 | | | | UR<br>UR |
| | K0F–A3751–70 | LIFTER, VALVE (3.162)<br>LEVE-SOUPAPE (3.162) | 16 | 16 | | | | UR<br>UR |
| | K0F–A3751–80 | LIFTER, VALVE (3.182)<br>LEVE-SOUPAPE (3.182) | 16 | 16 | | | | UR<br>UR |
| | K0F–A3751–90 | LIFTER, VALVE (3.202)<br>LEVE-SOUPAPE (3.202) | 16 | 16 | | | | UR<br>UR |
| | K0F–A3751–A0 | LIFTER, VALVE (3.222)<br>LEVE-SOUPAPE (3.222) | 16 | 16 | | | | UR<br>UR |
| | K0F–A3751–B0 | LIFTER, VALVE (3.242)<br>LEVE-SOUPAPE (3.242) | 16 | 16 | | | | UR<br>UR |
| | K0F–A3751–C0 | LIFTER, VALVE (3.262)<br>LEVE-SOUPAPE (3.262) | 16 | 16 | | | | UR<br>UR |
| | K0F–A3751–D0 | LIFTER, VALVE (3.282)<br>LEVE-SOUPAPE (3.282) | 16 | 16 | | | | UR<br>UR |
| | K0F–A3751–E0 | LIFTER, VALVE (3.302)<br>LEVE-SOUPAPE (3.302) | 16 | 16 | | | | UR<br>UR |
| | K0F–A3751–F0 | LIFTER, VALVE (3.322)<br>LEVE-SOUPAPE (3.322) | 16 | 16 | | | | UR<br>UR |
| | K0F–A3751–G0 | LIFTER, VALVE (3.342)<br>LEVE-SOUPAPE (3.342) | 16 | 16 | | | | UR<br>UR |
| | K0F–A3751–H0 | LIFTER, VALVE (3.362)<br>LEVE-SOUPAPE (3.362) | 16 | 16 | | | | UR<br>UR |
| | K0F–A3751–J0 | LIFTER, VALVE (3.382)<br>LEVE-SOUPAPE (3.382) | 16 | 16 | | | | UR<br>UR |
| | K0F–A3751–K0 | LIFTER, VALVE (3.402)<br>LEVE-SOUPAPE (3.402) | 16 | 16 | | | | UR<br>UR |

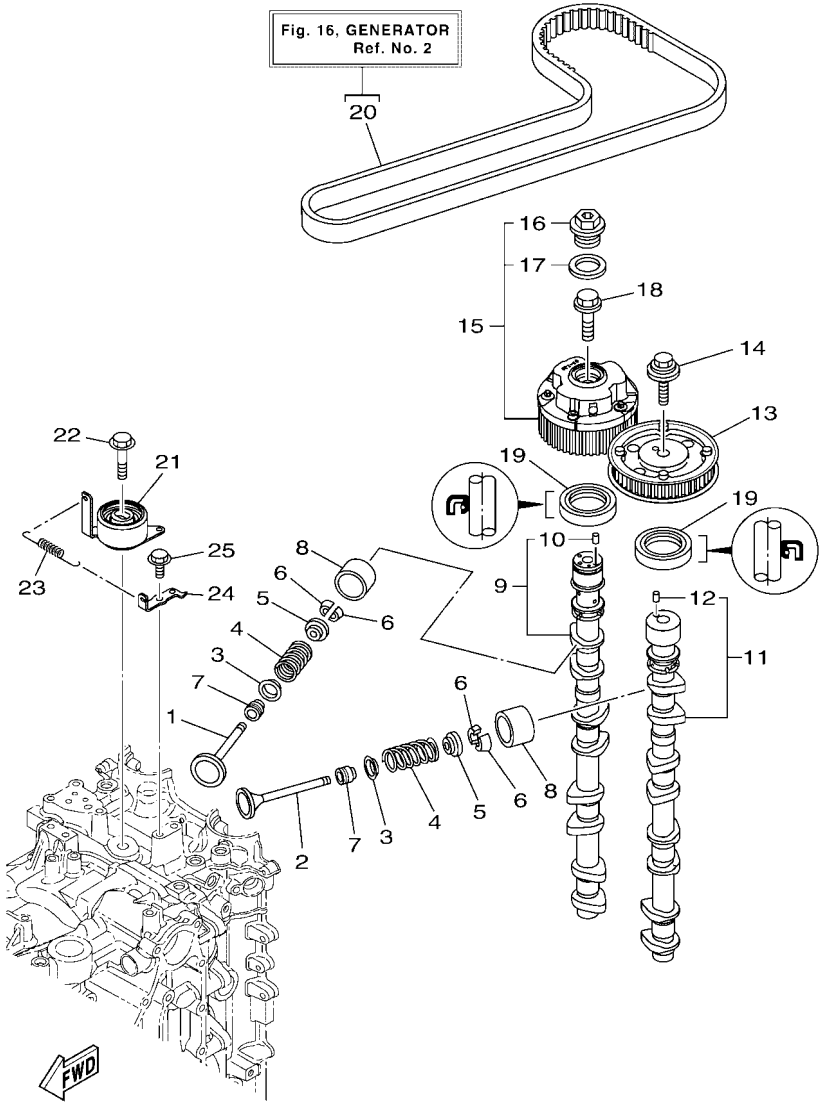


6DA3100-P080

## FIG. 8 VALVE — SOUPAPE

| REF. NO. | PART NO. N° PIECES | DESCRIPTION DESCRIPTION | 6DAB | 6DBB | | | | REMARKS REMARQUES |
|---|---|---|---|---|---|---|---|---|
| 8 | K0F–A3751–L0 | LIFTER, VALVE (3.422)<br>LEVE-SOUPAPE (3.422) | 16 | 16 | | | | UR<br>UR |
| | K0F–A3751–M0 | LIFTER, VALVE (3.442)<br>LEVE-SOUPAPE (3.442) | 16 | 16 | | | | UR<br>UR |
| | K0F–A3751–N0 | LIFTER, VALVE (3.462)<br>LEVE-SOUPAPE (3.462) | 16 | 16 | | | | UR<br>UR |
| | K0F–A3751–P0 | LIFTER, VALVE (3.482)<br>LEVE-SOUPAPE (3.482) | 16 | 16 | | | | UR<br>UR |
| | K0F–A3751–R0 | LIFTER, VALVE (3.502)<br>LEVE-SOUPAPE (3.502) | 16 | 16 | | | | UR<br>UR |
| | K0F–A3751–S0 | LIFTER, VALVE (3.522)<br>LEVE-SOUPAPE (3.522) | 16 | 16 | | | | UR<br>UR |
| | K0F–A3751–T0 | LIFTER, VALVE (3.542)<br>LEVE-SOUPAPE (3.542) | 16 | 16 | | | | UR<br>UR |
| | K0F–A3753–00 | LIFTER, VALVE (3.562)<br>LEVE-SOUPAPE (3.562) | 16 | 16 | | | | UR<br>UR |
| | K0F–A3753–10 | LIFTER, VALVE (3.582)<br>LEVE-SOUPAPE (3.582) | 16 | 16 | | | | UR<br>UR |
| | K0F–A3753–20 | LIFTER, VALVE (3.602)<br>LEVE-SOUPAPE (3.602) | 16 | 16 | | | | UR<br>UR |
| | K0F–A3753–30 | LIFTER, VALVE (3.625)<br>LEVE-SOUPAPE (3.625) | 16 | 16 | | | | UR<br>UR |
| | K0F–A3753–40 | LIFTER, VALVE (3.650)<br>LEVE-SOUPAPE (3.650) | 16 | 16 | | | | UR<br>UR |
| | K0F–A3753–50 | LIFTER, VALVE (3.675)<br>LEVE-SOUPAPE (3.675) | 16 | 16 | | | | UR<br>UR |
| | K0F–A3753–60 | LIFTER, VALVE (3.700)<br>LEVE-SOUPAPE (3.700) | 16 | 16 | | | | UR<br>UR |
| | K0F–A3753–70 | LIFTER, VALVE (3.725)<br>LEVE-SOUPAPE (3.725) | 16 | 16 | | | | UR<br>UR |
| 9 | 6DA–12171–01 | CAMSHAFT 1<br>ARBRE A CAMES 1 | 1 | 1 | | | | |
| 10 | 93605–10108 | .PIN, DOWEL<br>.AXE | 1 | 1 | | | | |
| 11 | 6DA–12181–01 | CAMSHAFT 2<br>ARBRE A CAMES 2 | 1 | 1 | | | | |
| 12 | 93605–10108 | .PIN, DOWEL<br>.AXE | 1 | 1 | | | | |
| 13 | 6FA–115A0–00 | DRIVEN GEAR ASSY<br>CLOCHE D'EMBRAYAGE | 1 | 1 | | | | |
| 14 | 90119–10050 | BOLT, WITH WASHER<br>BOULON, AVEC RONDELLE | 1 | 1 | | | | |
| 15 | 6P2–12645–22 | PULLEY ASSY 1<br>POULIE COMPLET 1 | 1 | 1 | | | | |
| 16 | 6P2–12623–00 | .BOLT<br>.BOULON | 1 | 1 | | | | |
| 17 | 6P2–12663–00 | .GASKET<br>.JOINT | 1 | 1 | | | | |
| 18 | 6P2–12615–00 | BOLT<br>BOULON | 1 | 1 | | | | |
| 19 | 93102–38008 | OIL SEAL<br>JOINT SPY | 2 | 2 | | | | |
| 20 | 6DA–W4624–00 | BELT (WITH ROTOR BOLTS)<br>COURROIE (AVEC BOULON) | 1 | 1 | | | | |

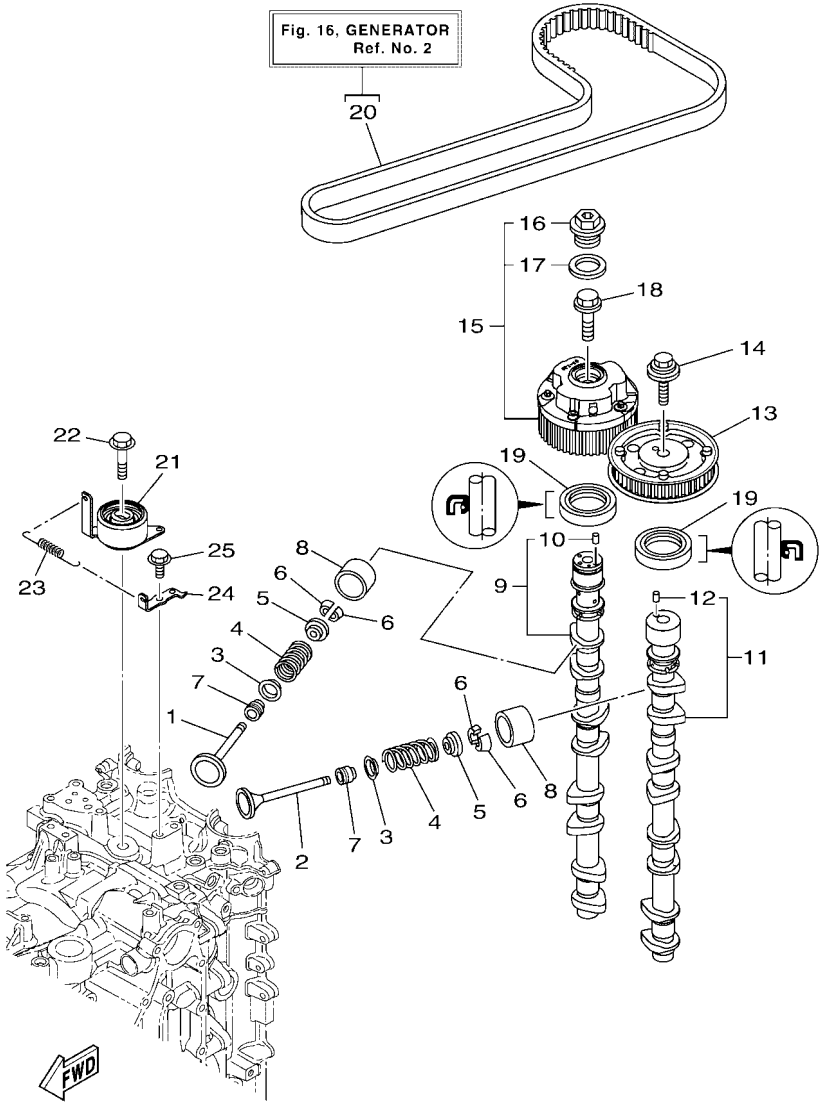


6DA3100-P080

## FIG. 8 VALVE — SOUPAPE

| REF. NO. | PART NO. N° PIECES | DESCRIPTION DESCRIPTION | 6DAB | 6DBB | | | | REMARKS REMARQUES |
|---|---|---|---|---|---|---|---|---|
| 21 | 6DA–11590–00 | TENSIONER ASSY<br>TENDEUR (ENS.) | 1 | 1 | | | | |
| 22 | 90119–10M07 | BOLT, WITH WASHER<br>BOULON, AVEC RONDELLE | 1 | 1 | | | | |
| 23 | 90506–18025 | SPRING, TENSION<br>RESSORT, TENSION | 1 | 1 | | | | |
| 24 | 6DA–11595–00 | PLATE,VALVE<br>PLAQUE DE SOUPAPE | 1 | 1 | | | | |
| 25 | 97E75–06516 | BOLT, HEXAGON W/W DEEP RECESS<br>VIS HEXAGONAL AVC RONDELLE | 1 | 1 | | | | |

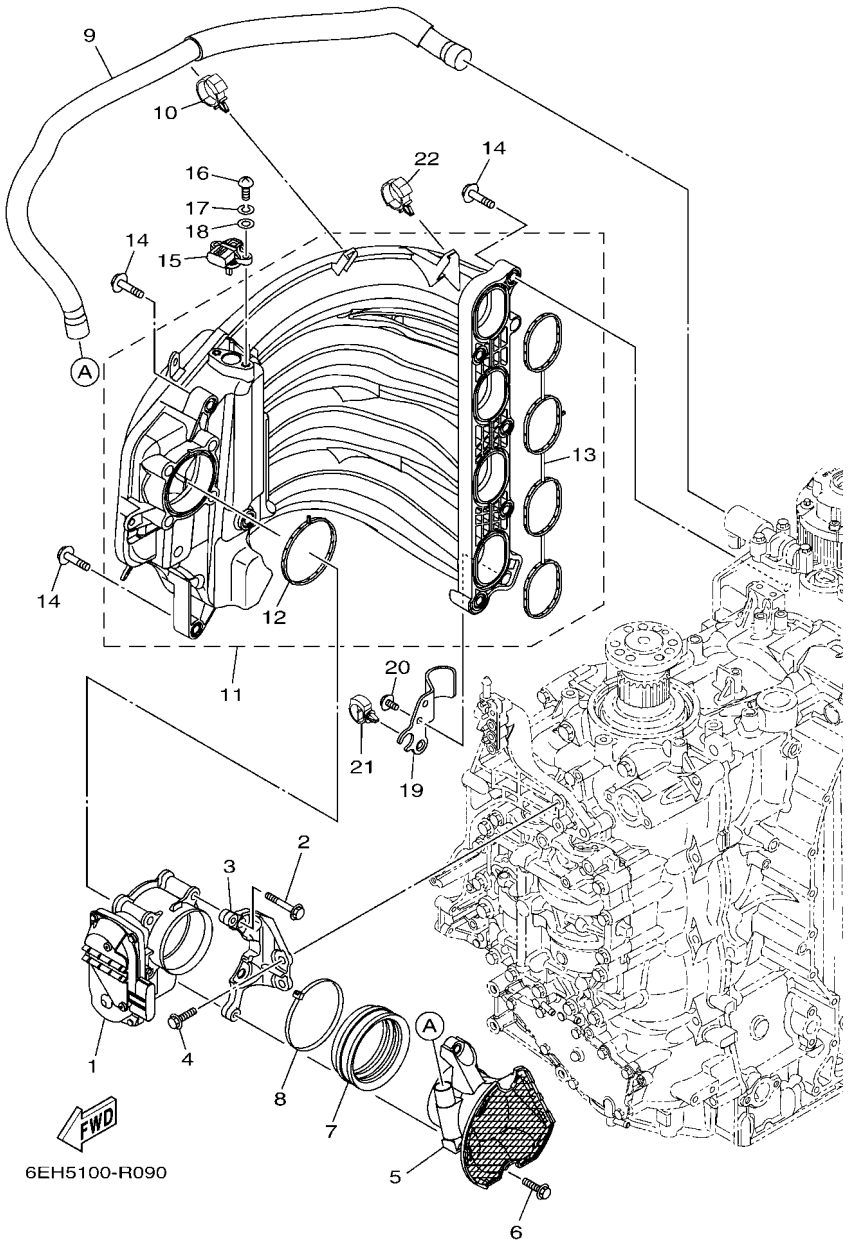


## FIG. 9 INTAKE 1 — ADMISSION 1

| REF. NO. | PART NO. N° PIECES | DESCRIPTION DESCRIPTION | 6DAB | 6DBB | | | | REMARKS REMARQUES |
|---|---|---|---|---|---|---|---|---|
| 1 | 6DA–13751–01 | BODY, THROTTLE 1<br>CARTER 1 | 1 | 1 | | | | |
| 2 | 97E75–08560 | BOLT, HEXAGON W/W DEEP RECESS<br>VIS HEXAGONAL AVC RONDELLE | 4 | 4 | | | | |
| 3 | 6DA–13152–00 | STAY 2<br>SUPPORT2 | 1 | 1 | | | | |
| 4 | 95D75–06025 | BOLT, FLANGE DEEP RECESS<br>BOULON FIXATION | 2 | 2 | | | | |
| 5 | 6DA–14440–00 | SILENCER ASSY, INTAKE<br>SIENCIEUX D'ADMISSION | 1 | 1 | | | | |
| 6 | 95D75–06025 | BOLT, FLANGE DEEP RECESS<br>BOULON FIXATION | 2 | 2 | | | | |
| 7 | 6P2–1441J–01 | PIPE, SILENCER<br>DURITE, DE SILENCIEUX | 1 | 1 | | | | |
| 8 | 90464–99004 | CLAMP<br>BRIDE | 1 | 1 | | | | |
| 9 | 6DA–15373–00 | PIPE, BREATHER<br>DURITE DE RENIFLARD | 1 | 1 | | | | |
| 10 | 90464–12183 | CLAMP<br>BRIDE | 1 | 1 | | | | |
| 11 | 6DA–13641–00 | MANIFOLD, INTAKE 1<br>TUBULURE, ADMISSION 1 | 1 | 1 | | | | |
| 12 | 6DA–13646–00 | .GASKET, MANIFOLD 2<br>.JOINT, TUBULURE 2 | 1 | 1 | | | | |
| 13 | 6DA–13645–00 | .GASKET, MANIFOLD 1<br>.JOINT, TUBULURE 1 | 1 | 1 | | | | |
| 14 | 90119–08020 | BOLT, WITH WASHER<br>BOULON, AVEC RONDELLE | 9 | 9 | | | | |
| 15 | 68F–83688–10 | SENSOR ASSY<br>SONDE (ENS.) | 1 | 1 | | | | |
| 16 | 97885–05016 | SCREW, PAN HEAD<br>VIS, A ENCOCHE | 2 | 2 | | | | |
| 17 | 92995–05100 | WASHER<br>RONDELLE | 2 | 2 | | | | |
| 18 | 92995–05600 | WASHER<br>RONDELLE | 2 | 2 | | | | |
| 19 | 6DA–13881–00 | COVER 1<br>COUVERCLE 1 | 1 | 1 | | | | |
| 20 | 95D95–06012 | BOLT, FLANGE DEEP RECESS<br>BOULON FIXATION | 2 | 2 | | | | |
| 21 | 90464–20181 | CLAMP<br>BRIDE | 1 | 1 | | | | |
| 22 | 90464–12183 | CLAMP<br>BRIDE | 1 | 1 | | | | |

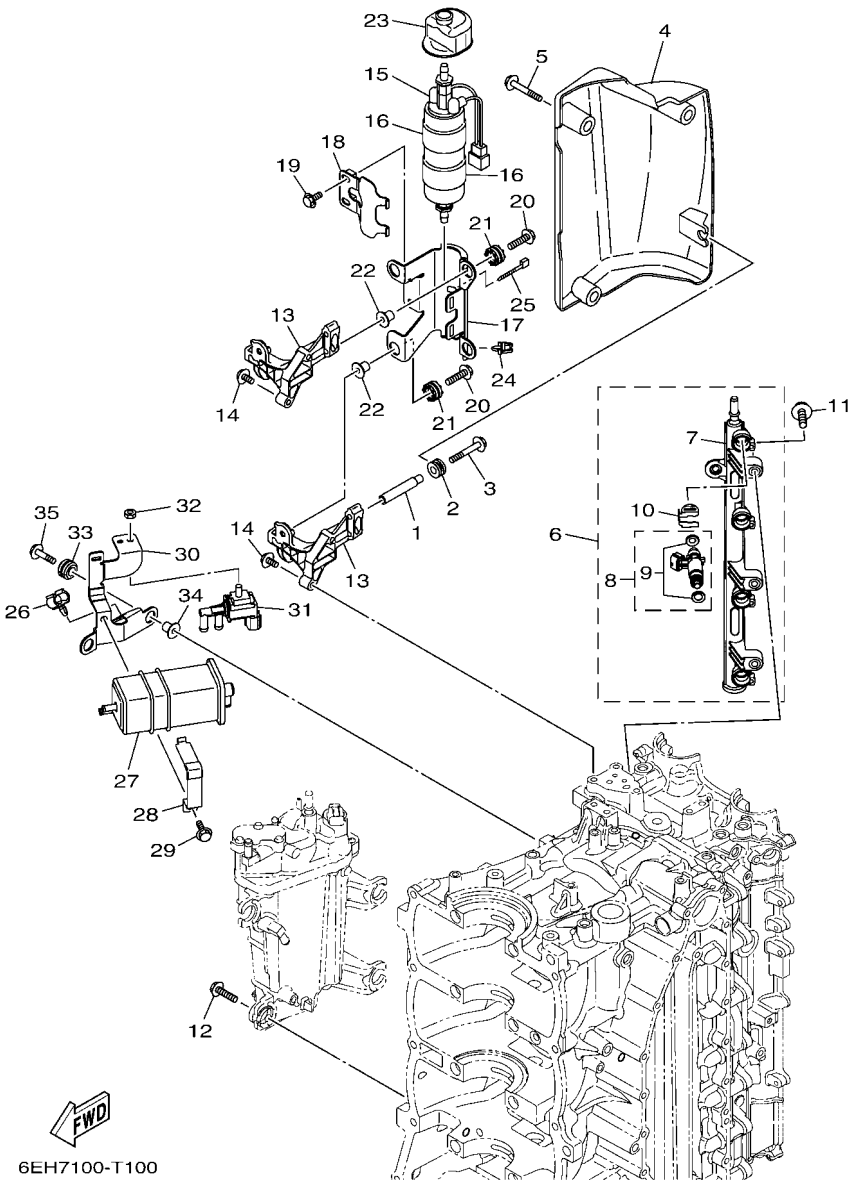


## FIG. 10 INTAKE 2 — ADMISSION 2

| REF. NO. | PART NO. N° PIECES | DESCRIPTION DESCRIPTION | 6DAB | 6DBB | | | | REMARKS REMARQUES |
|---|---|---|---|---|---|---|---|---|
| 1 | 90387–06283 | COLLAR<br>COLLERETTE | 1 | 1 | | | | |
| 2 | 90480–12314 | GROMMET<br>PASSE-FIL | 1 | 1 | | | | |
| 3 | 90105–06054 | BOLT, FLANGE<br>BOULON, A COLLERETTE | 1 | 1 | | | | |
| 4 | 6DA–13564–01 | COVER, MANIFOLD<br>COUVERCLE, TUBULURE | 1 | 1 | | | | |
| 5 | 95D95–06020 | BOLT, FLANGE DEEP RECESS<br>BOULON FIXATION | 3 | 3 | | | | |
| 6 | 6DA–13160–02 | DELIVERY PIPE ASSY 1<br>ENS. TUBE DE REFOULEMENT 1 | 1 | 1 | | | | |
| 7 | 6DA–13161–02 | .PIPE, DELIVERY 1<br>.DURITE REFOULEMENT 1 | 1 | 1 | | | | |
| 8 | 6DA–13761–01 | .INJECTOR<br>.INJECTEUR | 4 | 4 | | | | |
| 9 | 6AW–1410B–00 | ..PACKING KIT<br>..POCHETTE DE JOINTS | 1 | 1 | | | | |
| 10 | 6AW–13577–10 | .CLIP<br>.AGRAFE | 4 | 4 | | | | |
| 11 | 90105–06M08 | BOLT, FLANGE<br>BOULON, A COLLERETTE | 3 | 3 | | | | |
| 12 | 90119–06299 | BOLT, WITH WASHER<br>BOULON, AVEC RONDELLE | 4 | 4 | | | | |
| 13 | 6DA–24425–00 | BRACKET, FUEL PUMP 1<br>SUPPORT, POMPE A ESSENCE 1 | 2 | 2 | | | | |
| 14 | 90105–06M08 | BOLT, FLANGE<br>BOULON, A COLLERETTE | 4 | 4 | | | | |
| 15 | 6GR–24410–01 | FUEL PUMP ASSY<br>POMPE A ESSENCE | 1 | 1 | | | | |
| 16 | 6DA–24492–01 | BUSH, FUEL PUMP<br>BAGUE | 2 | 2 | | | | |
| 17 | 6DA–24491–00 | BRACKET, FUEL PUMP<br>SUPPORT, POMPE A ESSENCE | 1 | 1 | | | | |
| 18 | 6DA–24426–00 | BRACKET, FUEL PUMP 2<br>SUPPORT, POMPE A ESSENCE 2 | 1 | 1 | | | | |
| 19 | 95D95–06012 | BOLT, FLANGE DEEP RECESS<br>BOULON FIXATION | 2 | 2 | | | | |
| 20 | 90119–06309 | BOLT, WITH WASHER<br>BOULON, AVEC RONDELLE | 4 | 4 | | | | |
| 21 | 60V–85516–00 | SPACER<br>ENTRETOISE | 4 | 4 | | | | |
| 22 | 90387–06289 | COLLAR<br>COLLERETTE | 4 | 4 | | | | |
| 23 | 6DA–24462–00 | CAP, BLIND<br>COUVERCLE, BORGNE | 1 | 1 | | | | |
| 24 | 90464–11121 | CLAMP<br>BRIDE | 1 | 1 | | | | |
| 25 | 90465–11M10 | CLAMP<br>BRIDE | 1 | 1 | | | | |
| 26 | 90464–09130 | CLAMP<br>BRIDE | 1 | 1 | | | | |
| 27 | 6P2–24170–00 | CANISTER ASSY<br>BANDE, RASERVOIR A ESSENCE | 1 | 1 | | | | |

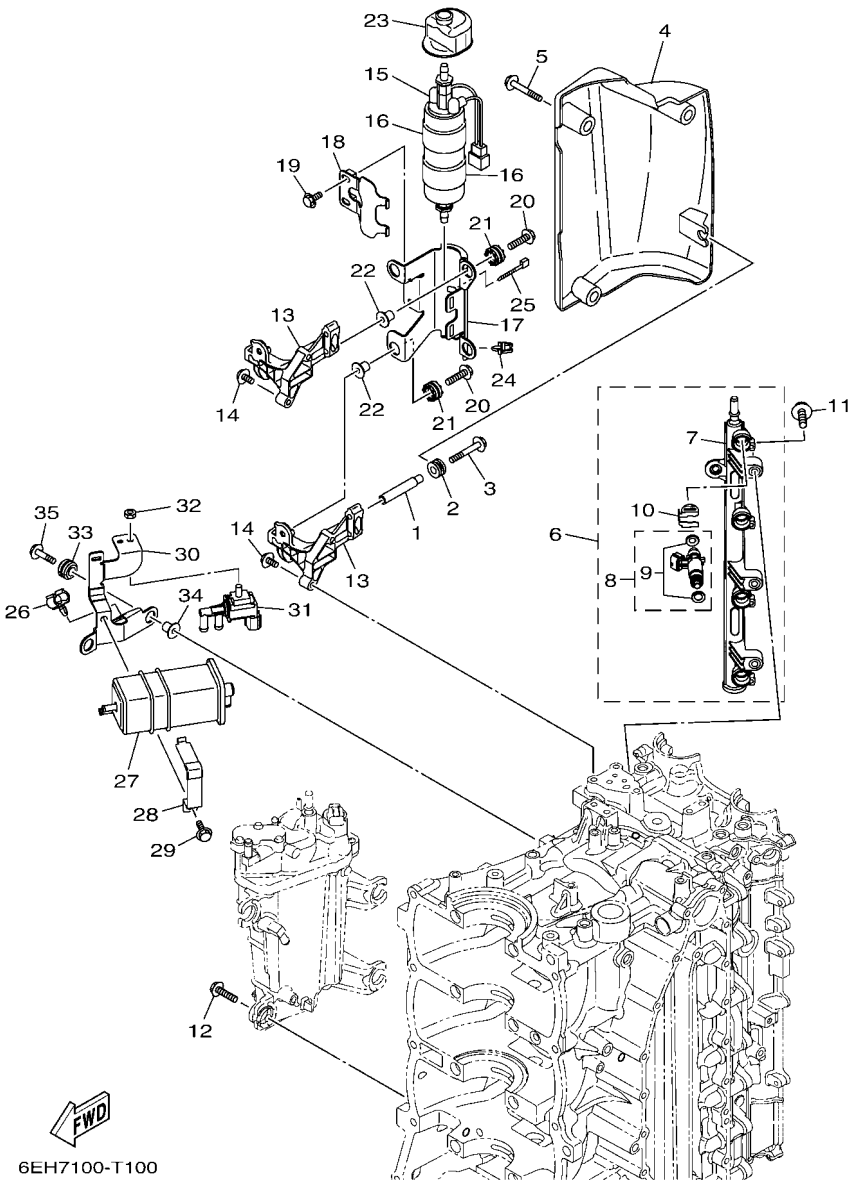


## FIG. 10 INTAKE 2 — ADMISSION 2

| REF. NO. | PART NO. N° PIECES | DESCRIPTION DESCRIPTION | 6DAB | 6DBB | | | | REMARKS REMARQUES |
|---|---|---|---|---|---|---|---|---|
| 28 | 63P–2419A–01 | HOLDER<br>SUPPORT | 1 | 1 | | | | |
| 29 | 95D95–06016 | BOLT, FLANGE DEEP RECESS<br>BOULON FIXATION | 1 | 1 | | | | |
| 30 | 6DA–2134X–00 | BRACKET, CANISTER<br>SUPPORT | 1 | 1 | | | | |
| 31 | 6C5–86120–00 | SOLENOID VALVE ASSY<br>SOLENOIDE | 1 | 1 | | | | |
| 32 | 95380–06600 | NUT, HEXAGON<br>ECROU | 1 | 1 | | | | |
| 33 | 90480–14031 | GROMMET<br>PASSE-FIL | 2 | 2 | | | | |
| 34 | 90387–06289 | COLLAR<br>COLLERETTE | 2 | 2 | | | | |
| 35 | 90119–06309 | BOLT, WITH WASHER<br>BOULON, AVEC RONDELLE | 2 | 2 | | | | |

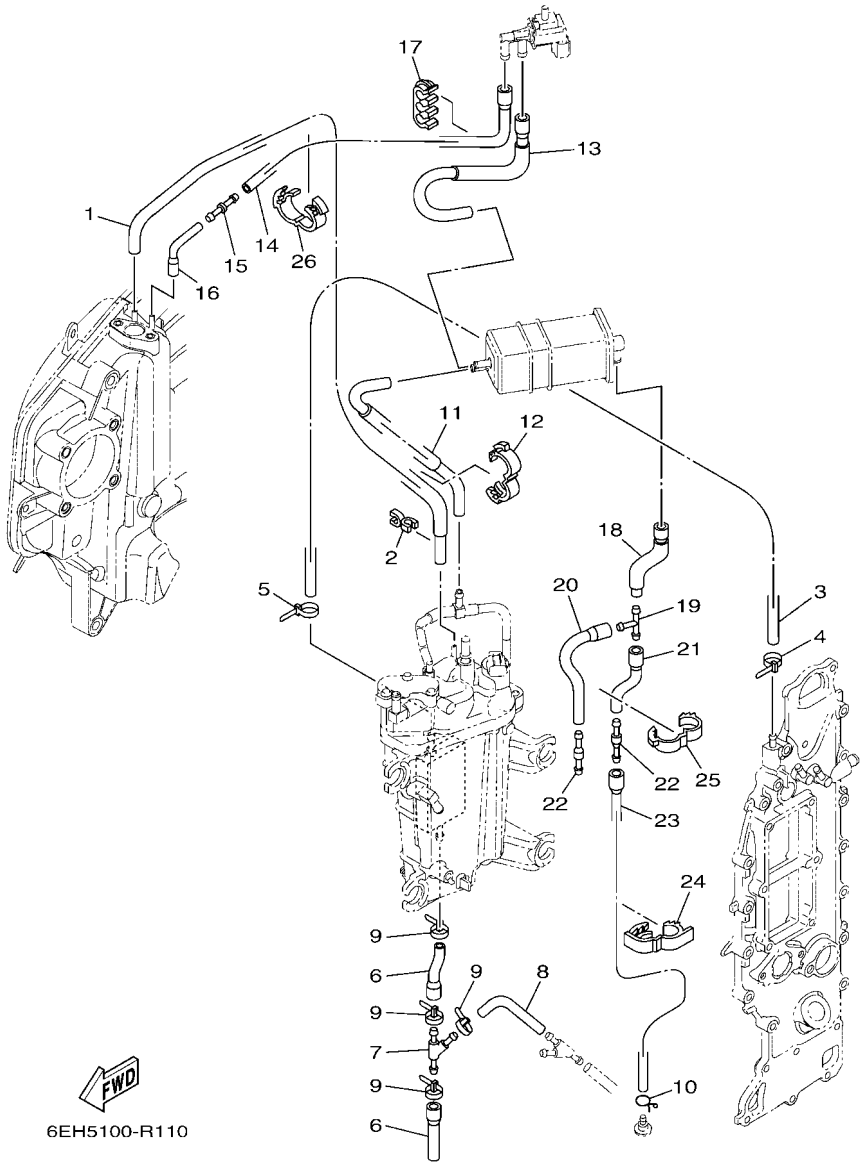


## FIG. 11 INTAKE 3 — ADMISSION 3

| REF. NO. | PART NO. N° PIECES | DESCRIPTION DESCRIPTION | 6DAB | 6DBB | | | | REMARKS REMARQUES |
|---|---|---|---|---|---|---|---|---|
| 1 | 6DA–13532–00 | HOSE, VACUUM SENSING 3<br>DURITE 3 | 1 | 1 | | | | |
| 2 | 90464–07M41 | CLAMP<br>BRIDE | 1 | 1 | | | | |
| 3 | 90445–09120 | HOSE (L600)<br>DURITE (L600) | 1 | 1 | | | | |
| 4 | 90465–11M10 | CLAMP<br>BRIDE | 1 | 1 | | | | |
| 5 | 90465–11M10 | CLAMP<br>BRIDE | 1 | 1 | | | | |
| 6 | 6DA–12576–00 | HOSE 1<br>TUYAU 1 | 2 | 2 | | | | |
| 7 | 6CE–24377–00 | PIPE, JOINT 2<br>DURITE RACCORDEMENT 2 | 1 | 1 | | | | |
| 8 | 90445–10056 | HOSE (L85)<br>DURITE (L85) | 1 | 1 | | | | |
| 9 | 90465–11M10 | CLAMP<br>BRIDE | 4 | 4 | | | | |
| 10 | 90467–09M09 | CLIP<br>JONC | 1 | 1 | | | | |
| 11 | 6DA–1475A–00 | PIPE 1<br>DURITE 1 | 1 | 1 | | | | |
| 12 | 90464–16001 | CLAMP<br>BRIDE | 1 | 1 | | | | |
| 13 | 6DA–1475F–00 | PIPE 3<br>DURITE 3 | 1 | 1 | | | | |
| 14 | 6DA–2416A–00 | HOSE<br>DURITE | 1 | 1 | | | | |
| 15 | 6CB–14989–00 | ORIFICE, AIR VENT<br>OR1F1CE | 1 | 1 | | | | |
| 16 | 6DA–1475G–00 | PIPE 4<br>DURITE 4 | 1 | 1 | | | | |
| 17 | 90464–10011 | CLAMP<br>BRIDE | 1 | 1 | | | | |
| 18 | 6DA–13545–00 | HOSE 1<br>DURITE 1 | 1 | 1 | | | | |
| 19 | 688–24378–00 | PIPE, JOINT 3<br>DURITE RACCORDEMENT 3 | 1 | 1 | | | | |
| 20 | 68V–13546–10 | HOSE 2<br>DURITE 2 | 1 | 1 | | | | |
| 21 | 6DA–13548–00 | HOSE, AIR 4<br>DURITE, A AIR 4 | 1 | 1 | | | | |
| 22 | 6E5–21744–00 | BREATHER<br>RENIFLARD | 2 | 2 | | | | |
| 23 | 6DA–13547–00 | HOSE 3<br>DURITE 3 | 1 | 1 | | | | |
| 24 | 90464–18004 | CLAMP<br>BRIDE | 1 | 1 | | | | |
| 25 | 90464–16001 | CLAMP<br>BRIDE | 1 | 1 | | | | |
| 26 | 90464–16001 | CLAMP<br>BRIDE | 1 | 1 | | | | |

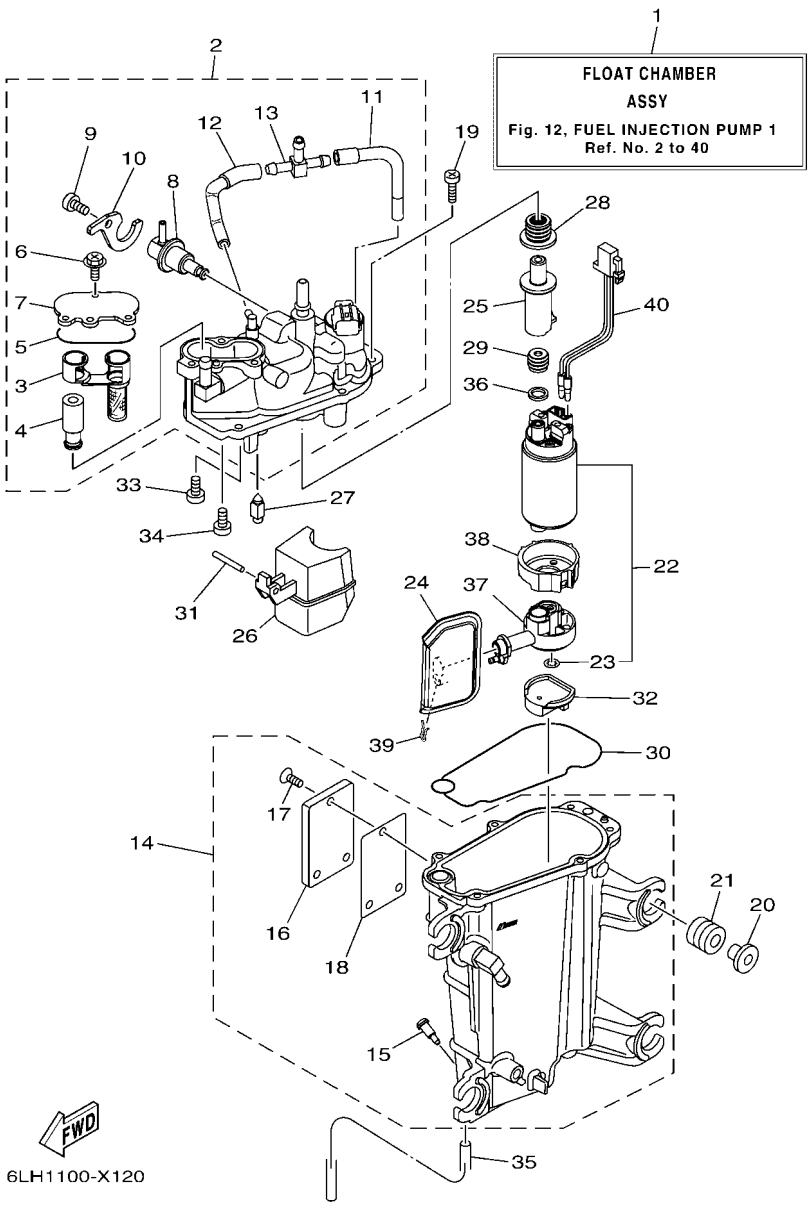


## FIG. 12 FUEL INJECTION PUMP 1 POMPE A INJECTEUR 1

| REF. NO. | PART NO. N° PIECES | DESCRIPTION DESCRIPTION | 6DAB | 6DBB | | | | REMARKS REMARQUES |
|---|---|---|---|---|---|---|---|---|
| 1 | 6LH–14180–00 | FLOAT CHAMBER ASSY<br>CUVE DE FLOTTEUR | 1 | 1 | | | | |
| 2 | 6DA–14182–00 | COVER, FLOAT CHAMBER<br>COUVERCLE, CUVE DE FLOTTEUR | 1 | 1 | | | | |
| 3 | 6CB–24501–01 | .FILTER, FUEL<br>.FILTRE | 1 | 1 | | | | |
| 4 | 6CB–24460–00 | .RELIEF VALVE ASSY<br>.SOUPAPE DE SECURITE COMPLET | 1 | 1 | | | | |
| 5 | 6CB–13016–00 | .O-RING<br>.JOINT TORIQUE | 1 | 1 | | | | |
| 6 | 6CB–14216–00 | .SCREW<br>.VIS | 3 | 3 | | | | |
| 7 | 6CB–24217–00 | .COVER<br>.COUVERCLE | 1 | 1 | | | | |
| 8 | 6CB–13906–01 | .REGULATOR, PRESSURE<br>.REGULATEUR DE PRESSION | 1 | 1 | | | | |
| 9 | 6CB–14564–00 | .SCREW<br>.VIS | 1 | 1 | | | | |
| 10 | 6DA–14146–00 | .PLATE<br>.PLAQUE | 1 | 1 | | | | |
| 11 | 6DA–13892–00 | .HOSE, AIR 2<br>.DURITE, A AIR 2 | 1 | 1 | | | | |
| 12 | 6DA–13893–00 | .HOSE, AIR 3<br>.DURITE, A AIR 3 | 1 | 1 | | | | |
| 13 | 69J–24379–00 | .PIPE, JOINT 4<br>.DURITE RACCORDEMENT 4 | 1 | 1 | | | | |
| 14 | 6LH–14181–00 | BODY, FLOAT CHAMBER 1<br>CORPS, CUVE DE FLOTTEUR 1 | 1 | 1 | | | | |
| 15 | 6P2–14191–00 | .PLUG, DRAIN<br>.PLOT, VIDANGE | 1 | 1 | | | | |
| 16 | 6EK–24452–00 | .COVER<br>.COUVERCLE | 1 | 1 | | | | |
| 17 | 6K8–14591–10 | .SCREW<br>.VIS | 3 | 3 | | | | |
| 18 | 6CB–24482–00 | .GASKET 1<br>.JOINT 1 | 1 | 1 | | | | |
| 19 | 63P–14567–00 | SCREW<br>VIS | 6 | 6 | | | | |
| 20 | 63P–13716–00 | COLLAR<br>COLLERETTE | 4 | 4 | | | | |
| 21 | 6CB–13593–00 | DAMPER<br>AMORTISSEUR | 4 | 4 | | | | |
| 22 | 6LH–W1390–00 | FUEL PUMP KIT<br>KIT POMPE A CARBURANT | 1 | 1 | | | | |
| 23 | 6C5–14127–10 | .CLIP<br>.JONC | 1 | 1 | | | | |
| 24 | 6LH–13915–00 | FILTER<br>FILTRE | 1 | 1 | | | | |
| 25 | 6LH–13132–00 | JOINT<br>RACCORD | 1 | 1 | | | | |
| 26 | 6CB–14985–00 | FLOAT<br>FLOTTEUR | 1 | 1 | | | | |
| 27 | 6CB–14546–00 | VALVE, NEEDLE<br>POINTEAU | 1 | 1 | | | | |

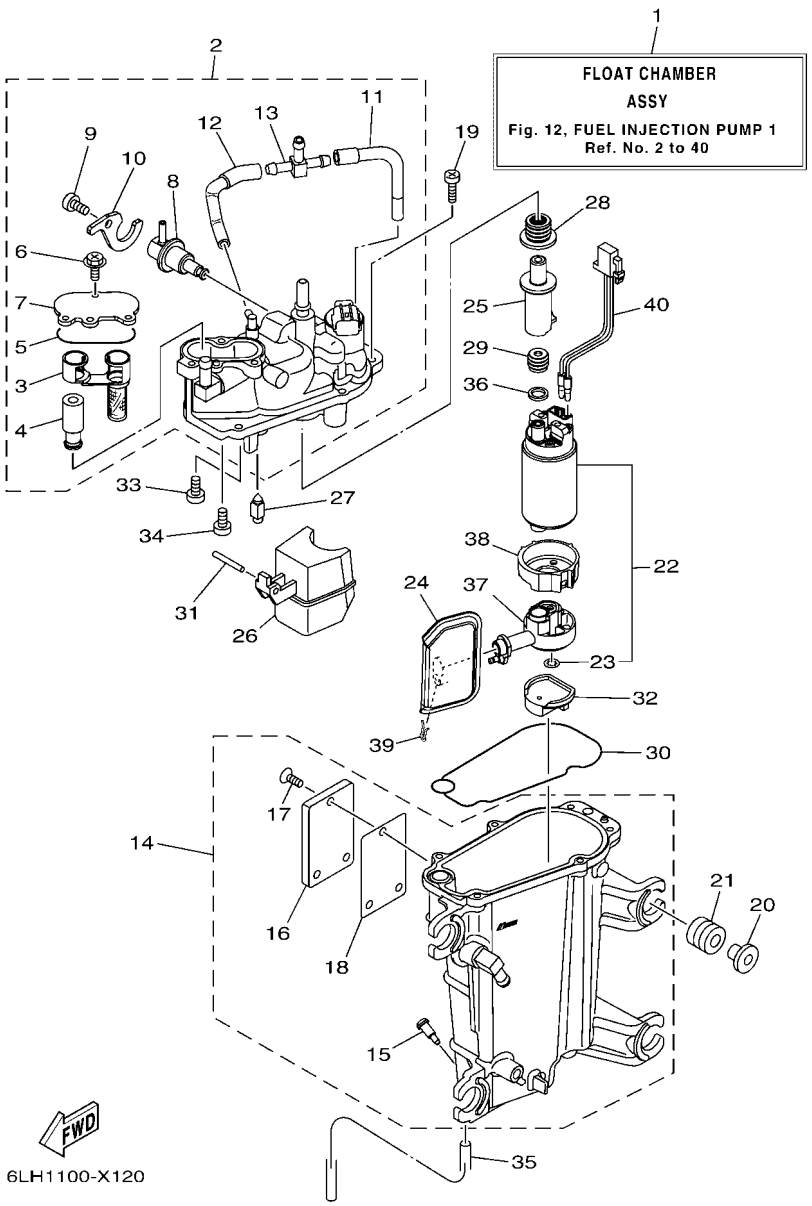


## FIG. 12 FUEL INJECTION PUMP 1 POMPE A INJECTEUR 1

| REF. NO. | PART NO. N° PIECES | DESCRIPTION DESCRIPTION | 6DAB | 6DBB | | | | REMARKS REMARQUES |
|---|---|---|---|---|---|---|---|---|
| 28 | 6LH–1447B–00 | BUSH 1<br>DOUILLE 1 | 1 | 1 | | | | |
| 29 | 6LH–13781–00 | DAMPER, PUMP<br>AMORTISSEUR, POMPE | 1 | 1 | | | | |
| 30 | 6CB–14984–00 | GASKET, FLOAT CHAMBER<br>JOINT, CUVE DE FLOTTEUR | 1 | 1 | | | | |
| 31 | 6P2–14386–00 | PIN, FLOAT<br>AXE, FLOTTEUR | 1 | 1 | | | | |
| 32 | 6LH–13784–00 | COVER, PUMP<br>COUVERCLE, POMPE | 1 | 1 | | | | |
| 33 | 4SV–24453–00 | SCREW<br>VIS | 1 | 1 | | | | |
| 34 | 98507–04008 | SCREW, PAN HEAD<br>VIS, TETE TRONCONIQUE | 1 | 1 | | | | |
| 35 | 6P2–14149–00 | PIPE<br>DURITE | 1 | 1 | | | | |
| 36 | 6LH–13716–00 | COLLAR<br>COLLERETTE | 1 | 1 | | | | |
| 37 | 6LH–13938–00 | PIPE<br>DURITE | 1 | 1 | | | | |
| 38 | 6LH–24492–00 | BUSH, FUEL PUMP<br>BAGUE | 1 | 1 | | | | |
| 39 | 6FM–14137–00 | CLIP<br>JONC | 1 | 1 | | | | |
| 40 | 6LH–87226–00 | WIRE HARNESS ASSY<br>ENS. FAISCEAU ELECTRIQUE | 1 | 1 | | | | |

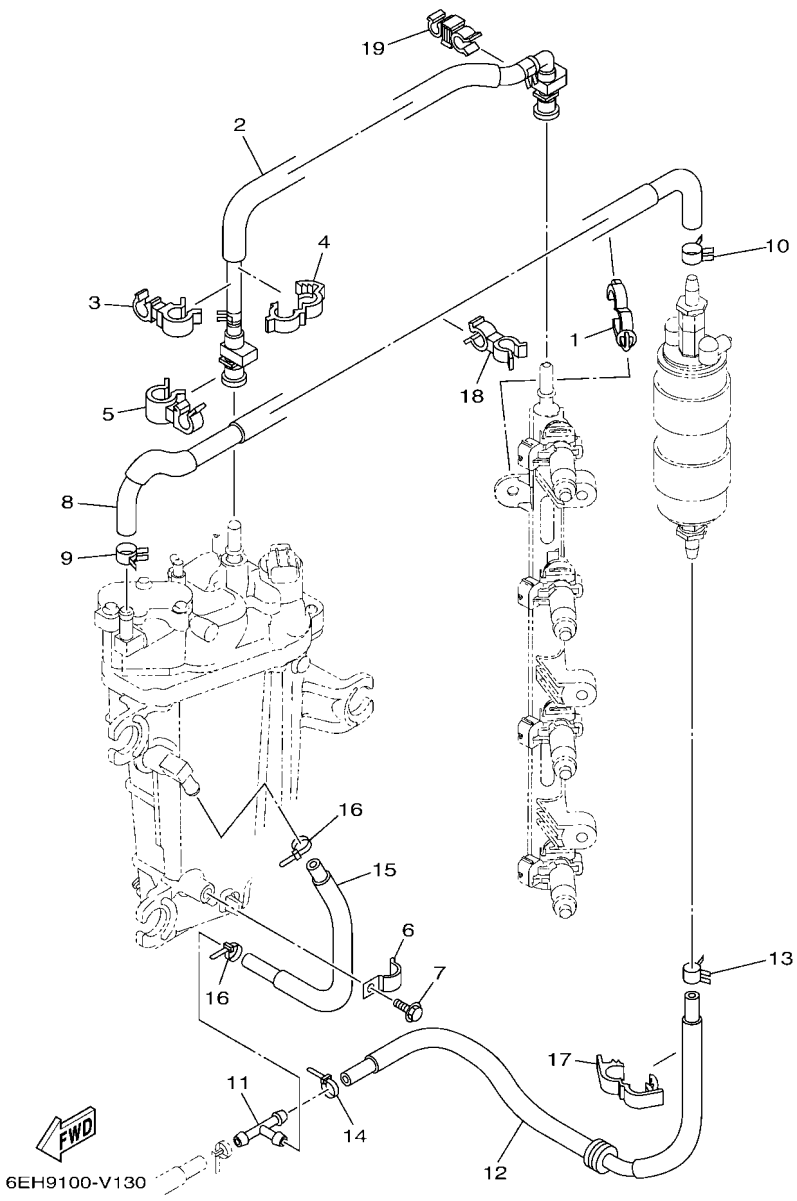


## FIG. 13 FUEL INJECTION PUMP 2 — POMPE A INJECTEUR 2

| REF. NO. | PART NO. N° PIECES | DESCRIPTION DESCRIPTION | 6DAB | 6DBB | | | | REMARKS REMARQUES |
|---|---|---|---|---|---|---|---|---|
| 1 | 90464–20181 | CLAMP<br>BRIDE | 1 | 1 | | | | |
| 2 | 6DA–24310–01 | FUEL PIPE ASSY<br>DURITE A ESSENCE | 1 | 1 | | | | |
| 3 | 90464–12010 | CLAMP<br>BRIDE | 1 | 1 | | | | |
| 4 | 90464–16003 | CLAMP<br>BRIDE | 1 | 1 | | | | |
| 5 | 90464–15007 | CLAMP<br>BRIDE | 1 | 1 | | | | |
| 6 | 90465–08M63 | CLAMP<br>BRIDE | 1 | 1 | | | | |
| 7 | 95D95–06010 | BOLT, FLANGE DEEP RECESS<br>BOULON FIXATION | 1 | 1 | | | | |
| 8 | 6DA–24324–10 | PIPE 13<br>DURITE 13 | 1 | 1 | | | | |
| 9 | 90467–120A7 | CLIP<br>JONC | 1 | 1 | | | | |
| 10 | 90467–140A9 | CLIP<br>JONC | 1 | 1 | | | | |
| 11 | 6E5–24378–00 | PIPE, JOINT 3<br>DURITE, RACCORDEMENT 3 | 1 | 1 | | | | |
| 12 | 6DA–24317–00 | PIPE 7<br>DURITE 7 | 1 | 1 | | | | |
| 13 | 90467–141A2 | CLIP<br>JONC | 1 | 1 | | | | |
| 14 | 90465–11M10 | CLAMP<br>BRIDE | 1 | 1 | | | | |
| 15 | 6DA–24323–00 | PIPE 12<br>DURITE 12 | 1 | 1 | | | | |
| 16 | 90465–11M10 | CLAMP<br>BRIDE | 2 | 2 | | | | |
| 17 | 90464–18004 | CLAMP<br>BRIDE | 1 | 1 | | | | |
| 18 | 90464–13260 | CLAMP<br>BRIDE | 1 | 1 | | | | |
| 19 | 90464–13013 | CLAMP<br>BRIDE | 1 | 1 | | | | |

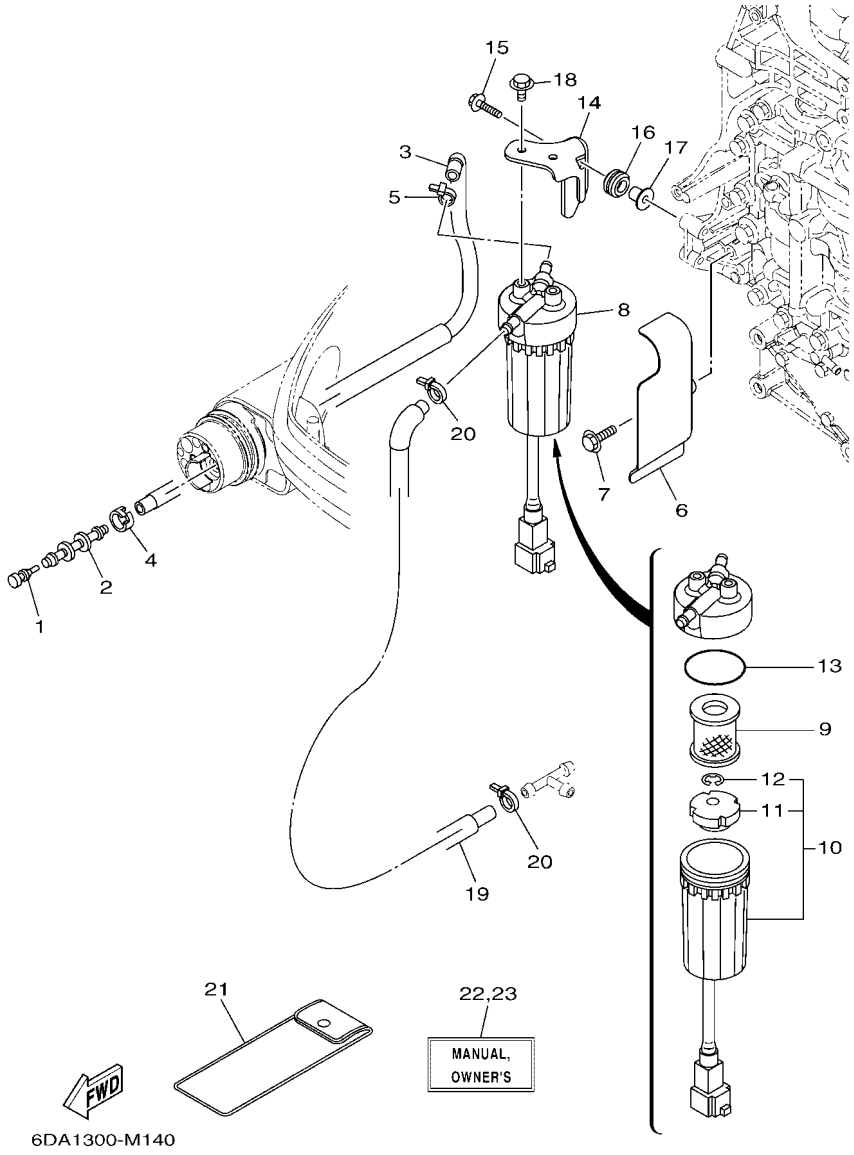


## FIG. 14 FUEL 1 — CARBURANT 1

| REF. NO. | PART NO. N° PIECES | DESCRIPTION DESCRIPTION | 6DAB | 6DBB | | | | REMARKS REMARQUES |
|---|---|---|---|---|---|---|---|---|
| 1 | 689–85547–01 | DAMPER<br>AMORTISSEUR | 1 | 1 | | | | |
| 2 | 6AW–24377–01 | PIPE, JOINT 2<br>DURITE RACCORDEMENT 2 | 1 | 1 | | | | |
| 3 | 6DA–24314–00 | PIPE 4<br>DURITE 4 | 1 | 1 | | | | |
| 4 | 6E5–24351–51 | BAND 1<br>COLLIER 1 | 1 | 1 | | | | |
| 5 | 90465–11M10 | CLAMP<br>BRIDE | 1 | 1 | | | | |
| 6 | 6DA–24596–01 | COVER<br>COUVERCLE | 1 | 1 | | | | |
| 7 | 95D95–06025 | BOLT, FLANGE DEEP RECESS<br>BOULON FIXATION | 2 | 2 | | | | |
| 8 | 6P3–24560–04 | FILTER ASSY<br>ENS FILTRE | 1 | 1 | | | | |
| 9 | 6P3–24563–02 | .ELEMENT, FILTER<br>.ELEMENT, FILTRE | 1 | 1 | | | | |
| 10 | 6P3–24562–03 | .CUP, FILTER<br>.CUVETTE, FILTRE | 1 | 1 | | | | |
| 11 | 6P3–24469–00 | ..FLOAT, WATER LEVEL<br>..FLOTTEUR | 1 | 1 | | | | |
| 12 | 6P3–24519–00 | ..CLIP<br>..JONC | 1 | 1 | | | | |
| 13 | 6P3–24564–00 | .GASKET<br>.JOINT | 1 | 1 | | | | |
| 14 | 6DA–24566–00 | BRACKET, FILTER<br>SUPPORT, FILTRE | 1 | 1 | | | | |
| 15 | 90119–06309 | BOLT, WITH WASHER<br>BOULON, AVEC RONDELLE | 2 | 2 | | | | |
| 16 | 90480–15013 | GROMMET<br>PASSE-FIL | 2 | 2 | | | | |
| 17 | 90387–06289 | COLLAR<br>COLLERETTE | 2 | 2 | | | | |
| 18 | 95D95–06012 | BOLT, FLANGE DEEP RECESS<br>BOULON FIXATION | 2 | 2 | | | | |
| 19 | 6DA–24313–00 | PIPE 3<br>DURITE 3 | 1 | 1 | | | | |
| 20 | 90465–11M10 | CLAMP<br>BRIDE | 2 | 2 | | | | |
| 21 | 69J–28100–03 | TOOL KIT<br>TROUSSE A OUTILS | 1 | 1 | | | | AP<br>AP |
| 22 | 6DA–28199–79–E0 | MANUAL,OWNER'S<br>MANUEL D'UTILISATION | 1 | 1 | | | | UR (E)<br>UR (E) |
| | 6DA–28199–79–F0 | MANUAL,OWNER'S<br>MANUEL D'UTILISATION | 1 | 1 | | | | UR (F)<br>UR (F) |
| | 6DA–28199–79–S0 | MANUAL,OWNER'S<br>MANUEL D'UTILISATION | 1 | 1 | | | | UR (ES)<br>UR (ES) |
| | 6DA–28199–79–G0 | MANUAL,OWNER'S<br>MANUEL D'UTILISATION | 1 | 1 | | | | UR (D)<br>UR (D) |
| | 6DA–28199–79–D0 | MANUAL,OWNER'S<br>MANUEL D'UTILISATION | 1 | 1 | | | | UR (NL)<br>UR (NL) |
| | 6DA–28199–79–H0 | MANUAL,OWNER'S<br>MANUEL D'UTILISATION | 1 | 1 | | | | UR (I)<br>UR (I) |

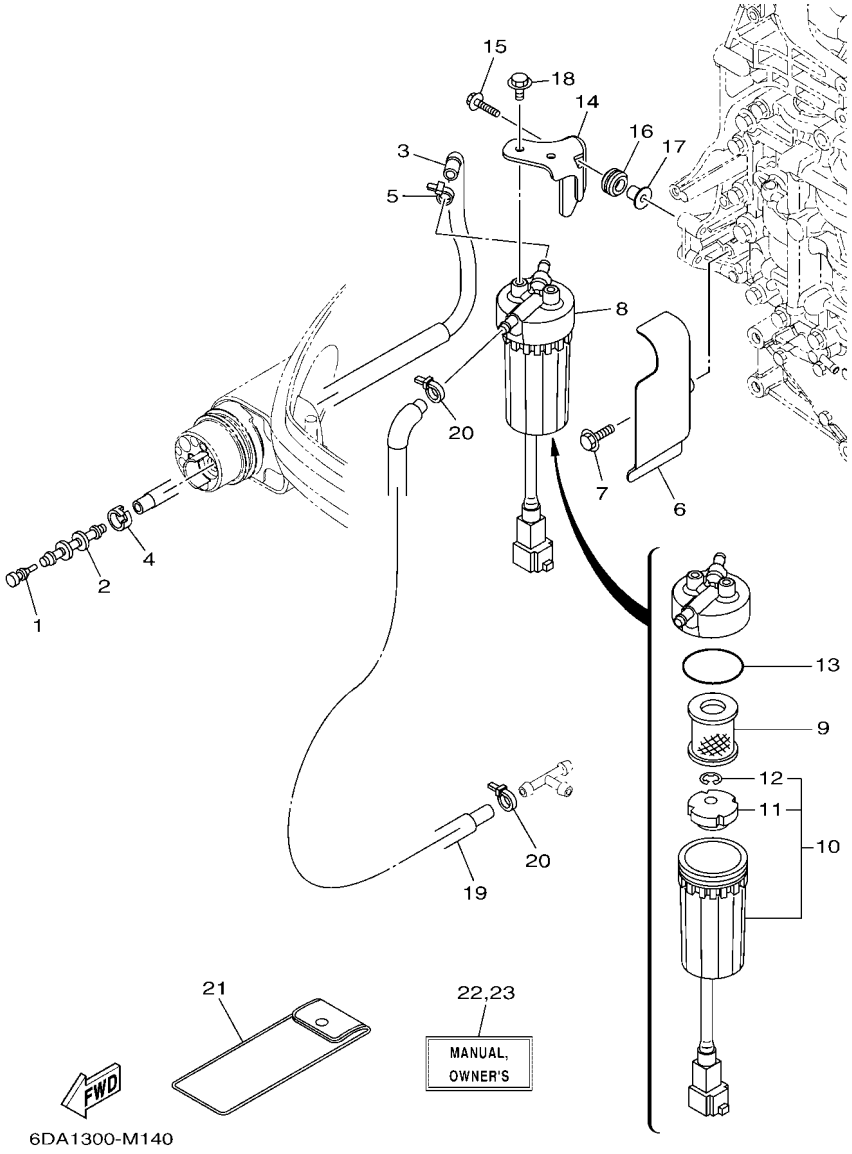


## FIG. 14 FUEL 1 — CARBURANT 1

| REF. NO. | PART NO. N° PIECES | DESCRIPTION DESCRIPTION | 6DAB | 6DBB | | | | REMARKS REMARQUES |
|---|---|---|---|---|---|---|---|---|
| 23 | 6DA–28199–89–K0 | MANUAL,OWNER'S<br>MANUEL D'UTILISATION | 1 | 1 | | | | UR (DK)<br>UR (DK) |
| | 6DA–28199–89–R0 | MANUAL,OWNER'S<br>MANUEL D'UTILISATION | 1 | 1 | | | | UR (GR)<br>UR (GR) |
| | 6DA–28199–89–P0 | MANUAL,OWNER'S<br>MANUEL D'UTILISATION | 1 | 1 | | | | UR (P)<br>UR (P) |
| | 6DA–28199–89–N0 | MANUAL,OWNER'S<br>MANUEL D'UTILISATION | 1 | 1 | | | | UR (N)<br>UR (N) |
| | 6DA–28199–89–M0 | MANUAL,OWNER'S<br>MANUEL D'UTILISATION | 1 | 1 | | | | UR (S)<br>UR (S) |
| | 6DA–28199–89–L0 | MANUAL,OWNER'S<br>MANUEL D'UTILISATION | 1 | 1 | | | | UR (SF)<br>UR (SF) |

## FIG. 15 FUEL 2 — CARBURANT 2

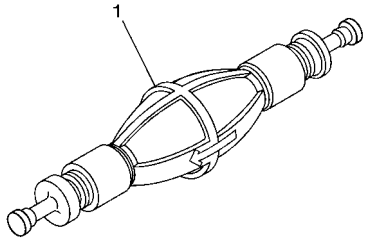

6AW6100-L160

| REF. NO. | PART NO. N° PIECES | DESCRIPTION DESCRIPTION | 6DAB | 6DBB | | | | REMARKS REMARQUES |
|---|---|---|---|---|---|---|---|---|
| 1 | 6AW–24360–02 | PRIMER PUMP ASSY<br>POMPE D'AMORCAGE | 1 | 1 | | | | AP<br>AP |

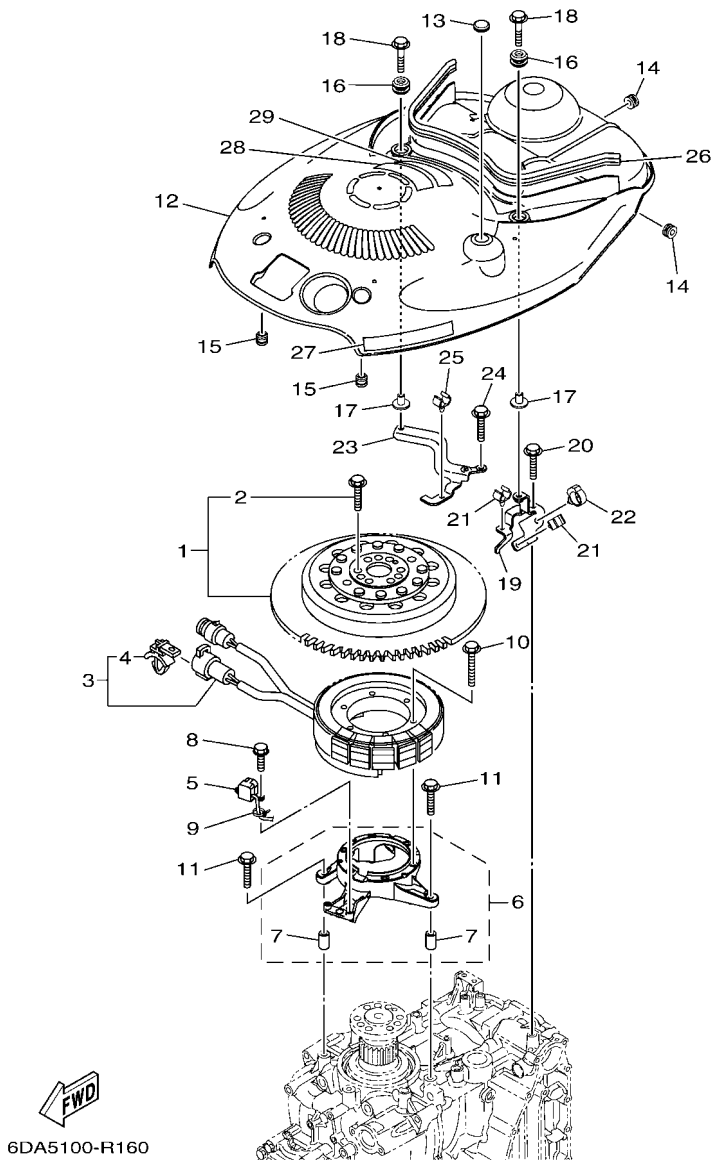


## FIG. 16 GENERATOR — GENERATRICE

| REF. NO. | PART NO. N° PIECES | DESCRIPTION DESCRIPTION | 6DAB | 6DBB | | | | REMARKS REMARQUES |
|---|---|---|---|---|---|---|---|---|
| 1 | 6DA–W8145–00 | ROTOR ASSY WITH BOLTS<br>ROTOR COMPLET AVEC BOULON | 1 | 1 | | | | |
| 2 | 6EK–W9010–00 | .BOLT SET<br>.BOULON ENS. | 1 | 1 | | | | |
| 3 | 6DA–81410–00 | STATOR ASSY<br>STATOR COMPLET | 1 | 1 | | | | |
| 4 | 90464–12002 | .CLAMP<br>.BRIDE | 1 | 1 | | | | |
| 5 | 6CB–85580–00 | COIL, PULSER<br>BOBINE, PULSEUR | 1 | 1 | | | | |
| 6 | 6DA–85561–00 | BASE, MAGNETO<br>BASE, MAGNETO | 1 | 1 | | | | |
| 7 | 99530–08012 | .PIN, DOWEL<br>.GOUJON, D'ASSEMBLAGE | 2 | 2 | | | | |
| 8 | 97595–05520 | BOLT, WITH WASHER<br>VIS HEXAGONAL AVC RONDELLE | 2 | 2 | | | | |
| 9 | 90465–13M97 | CLAMP<br>BRIDE | 1 | 1 | | | | |
| 10 | 95022–06035 | BOLT, FLANGE<br>BOULON, A COLLERETTE | 6 | 6 | | | | |
| 11 | 95D95–06030 | BOLT, FLANGE DEEP RECESS<br>BOULON FIXATION | 4 | 4 | | | | |
| 12 | 6DA–81337–01 | COVER, FLYWHEEL<br>COUVERCLE, VOLANT | 1 | 1 | | | | |
| 13 | 90480–16025 | GROMMET<br>PASSE-FIL | 1 | 1 | | | | |
| 14 | 90480–12314 | GROMMET<br>PASSE-FIL | 2 | 2 | | | | |
| 15 | 6A0–82317–01 | DAMPER, IGNITION COIL<br>AMORTISSEUR, BOBINE D'ALLUM | 2 | 2 | | | | |
| 16 | 6BG–42748–01 | GROMMET<br>PASSE-FIL | 2 | 2 | | | | |
| 17 | 90387–06M69 | COLLAR<br>COLLERETTE | 2 | 2 | | | | |
| 18 | 90119–06291 | BOLT, WITH WASHER<br>BOULON, AVEC RONDELLE | 2 | 2 | | | | |
| 19 | 6DA–8132G–01 | PLATE<br>PLAQUE | 1 | 1 | | | | |
| 20 | 95D95–06016 | BOLT, FLANGE DEEP RECESS<br>BOULON FIXATION | 1 | 1 | | | | |
| 21 | 90464–09130 | CLAMP<br>BRIDE | 2 | 2 | | | | |
| 22 | 90464–20181 | CLAMP<br>BRIDE | 1 | 1 | | | | |
| 23 | 6DA–82398–01 | PLATE 3<br>PLAQUETTE 3 | 1 | 1 | | | | |
| 24 | 95D95–06016 | BOLT, FLANGE DEEP RECESS<br>BOULON FIXATION | 2 | 2 | | | | |
| 25 | 90464–09130 | CLAMP<br>BRIDE | 1 | 1 | | | | |
| 26 | 6DA–42617–00 | DAMPER, FORM<br>BOURRELET, CAOUTCHOUC | 1 | 1 | | | | |
| 27 | 63P–13437–63 | MARK, CAUTION<br>MAKER | 1 | 1 | | | | |

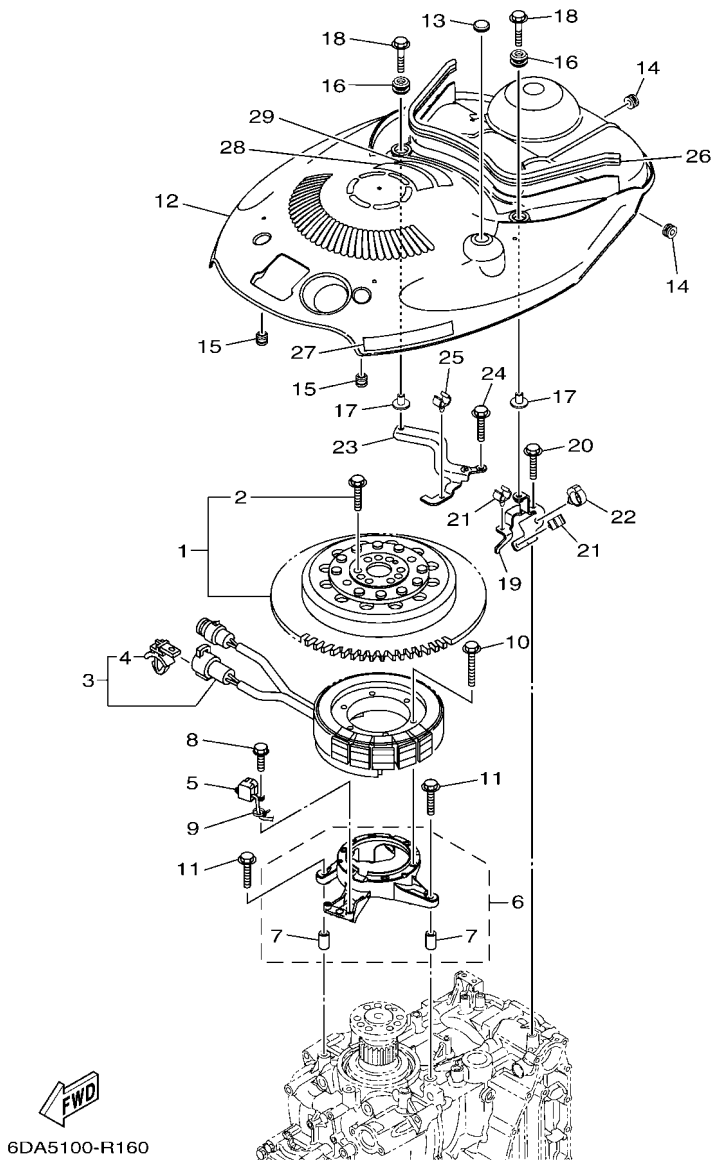


## FIG. 16 GENERATOR — GENERATRICE

| REF. NO. | PART NO. N° PIECES | DESCRIPTION DESCRIPTION | 6DAB | 6DBB | | | | REMARKS REMARQUES |
|---|---|---|---|---|---|---|---|---|
| 28 | 6EE–81994–40 | LABEL, SAFETY<br>ETIQUETTE, SECURITE | 1 | 1 | | | | |
| 29 | 6EE–81994–50 | LABEL, SAFETY<br>ETIQUETTE, SECURITE | 1 | 1 | | | | |

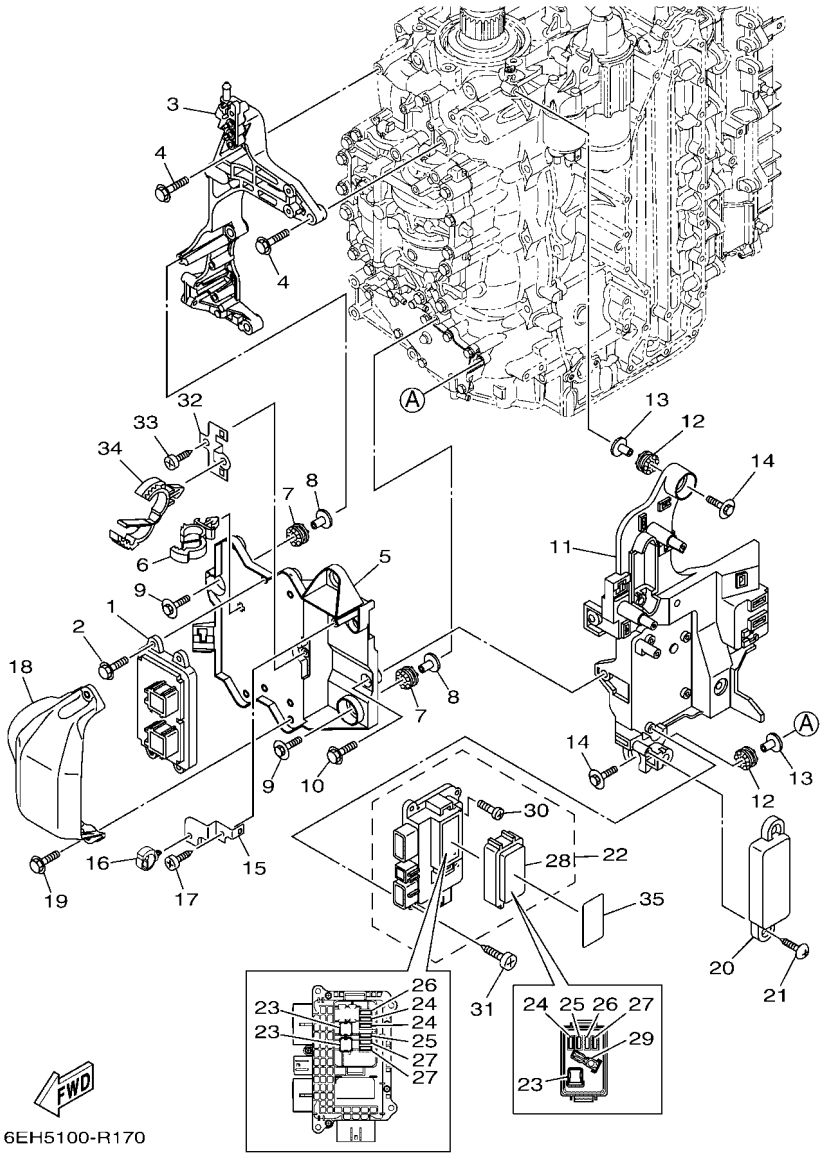


## FIG. 17 ELECTRICAL 1 — PARTIE ELECTRIQUE 1

| REF. NO. | PART NO. N° PIECES | DESCRIPTION DESCRIPTION | 6DAB | 6DBB | | | | REMARKS REMARQUES |
|---|---|---|---|---|---|---|---|---|
| 1 | 6DA–8591A–11 | ENGINE CONTROL UNIT ASSY<br>BLOC DE CONTROL | 1 | 1 | | | | |
| 2 | 95D95–06020 | BOLT, FLANGE DEEP RECESS<br>BOULON FIXATION | 4 | 4 | | | | |
| 3 | 6DA–85991–01 | BRACKET, UNIT<br>SUPPORT COMPLET | 1 | 1 | | | | |
| 4 | 95D75–08035 | BOLT, FLANGE DEEP RECESS<br>BOULON FIXATION | 4 | 4 | | | | |
| 5 | 6DA–81948–01 | BRACKET<br>SUPPORT | 1 | 1 | | | | |
| 6 | 90464–12183 | CLAMP<br>BRIDE | 1 | 1 | | | | |
| 7 | 68F–85516–01 | SPACER<br>ENTRETOISE | 3 | 3 | | | | |
| 8 | 90387–06176 | COLLAR<br>COLLERETTE | 3 | 3 | | | | |
| 9 | 68F–85119–00 | BOLT<br>BOULON | 3 | 3 | | | | |
| 10 | 95D95–06016 | BOLT, FLANGE DEEP RECESS<br>BOULON FIXATION | 2 | 2 | | | | |
| 11 | 6DA–81952–10 | HOLDER, RELAY<br>SUPPORT, RELAIS | 1 | 1 | | | | |
| 12 | 68F–85516–01 | SPACER<br>ENTRETOISE | 3 | 3 | | | | |
| 13 | 90387–06176 | COLLAR<br>COLLERETTE | 3 | 3 | | | | |
| 14 | 68F–85119–00 | BOLT<br>BOULON | 3 | 3 | | | | |
| 15 | 6DA–85548–10 | HOLDER<br>SUPPORT | 1 | 1 | | | | |
| 16 | 90464–20181 | CLAMP<br>BRIDE | 1 | 1 | | | | |
| 17 | 97780–60620 | SCREW, TAPPING<br>VIS, TETE BOMBEE | 1 | 1 | | | | |
| 18 | 6DA–81639–01 | COVER<br>COUVERCLE | 1 | 1 | | | | |
| 19 | 95D95–06020 | BOLT, FLANGE DEEP RECESS<br>BOULON FIXATION | 2 | 2 | | | | |
| 20 | 6DA–8252U–01 | COVER<br>COUVERCLE | 1 | 1 | | | | |
| 21 | 90169–05M00 | SCREW, TRUSS HEAD TAPPING<br>VIS, TETE FRAISEE | 2 | 2 | | | | |
| 22 | 6DA–82170–11 | FUSE BOX ASSY<br>BOITE A FUSIBLES | 1 | 1 | | | | |
| 23 | 6CB–82151–41 | .FUSE (60A)<br>.FUSIBLE (60A) | 3 | 3 | | | | |
| 24 | 6CB–82151–00 | .FUSE (10A)<br>.FUSIBLE (10A) | 3 | 3 | | | | |
| 25 | 6CB–82151–10 | .FUSE (15A)<br>.FUSIBLE (15A) | 2 | 2 | | | | |
| 26 | 6CB–82151–20 | .FUSE (20A)<br>.FUSIBLE (20A) | 2 | 2 | | | | |
| 27 | 6CB–82151–30 | .FUSE (30A)<br>.FUSIBLE (30A) | 3 | 3 | | | | |

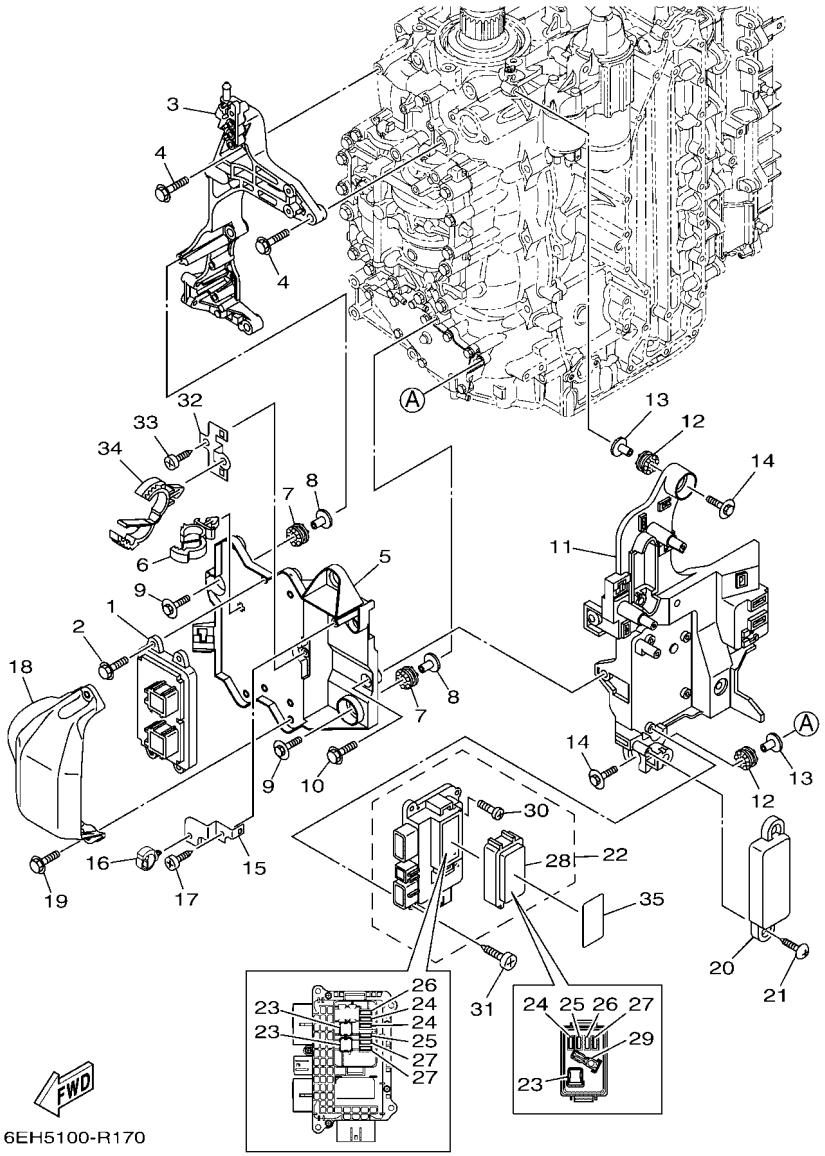


## FIG. 17 ELECTRICAL 1 — PARTIE ELECTRIQUE 1

| REF. NO. | PART NO. N° PIECES | DESCRIPTION DESCRIPTION | 6DAB | 6DBB | | | | REMARKS REMARQUES |
|---|---|---|---|---|---|---|---|---|
| 28 | 6CB–85544–10 | .COVER<br>.COUVERCLE | 1 | 1 | | | | |
| 29 | 6CB–2812A–00 | .PULLER, FUSE<br>.TENDEUR, FUSIBLE | 1 | 1 | | | | |
| 30 | 6P2–82113–00 | .SCREW (M3)<br>.VIS (M3) | 5 | 5 | | | | |
| 31 | 97780–50620 | SCREW, TAPPING<br>VIS, TETE BOMBEE | 4 | 4 | | | | |
| 32 | 6DA–8257V–00 | PLATE, CONNECTOR<br>PLAQUE, CONNECTEUR | 1 | 1 | | | | |
| 33 | 97780–60620 | SCREW, TAPPING<br>VIS, TETE BOMBEE | 1 | 1 | | | | |
| 34 | 90464–32002 | CLAMP<br>BRIDE | 1 | 1 | | | | |
| 35 | 6DA–81919–11 | GRAPHIC, REGULATOR<br>ADHESIF, REGULATEUR | 1 | 1 | | | | |

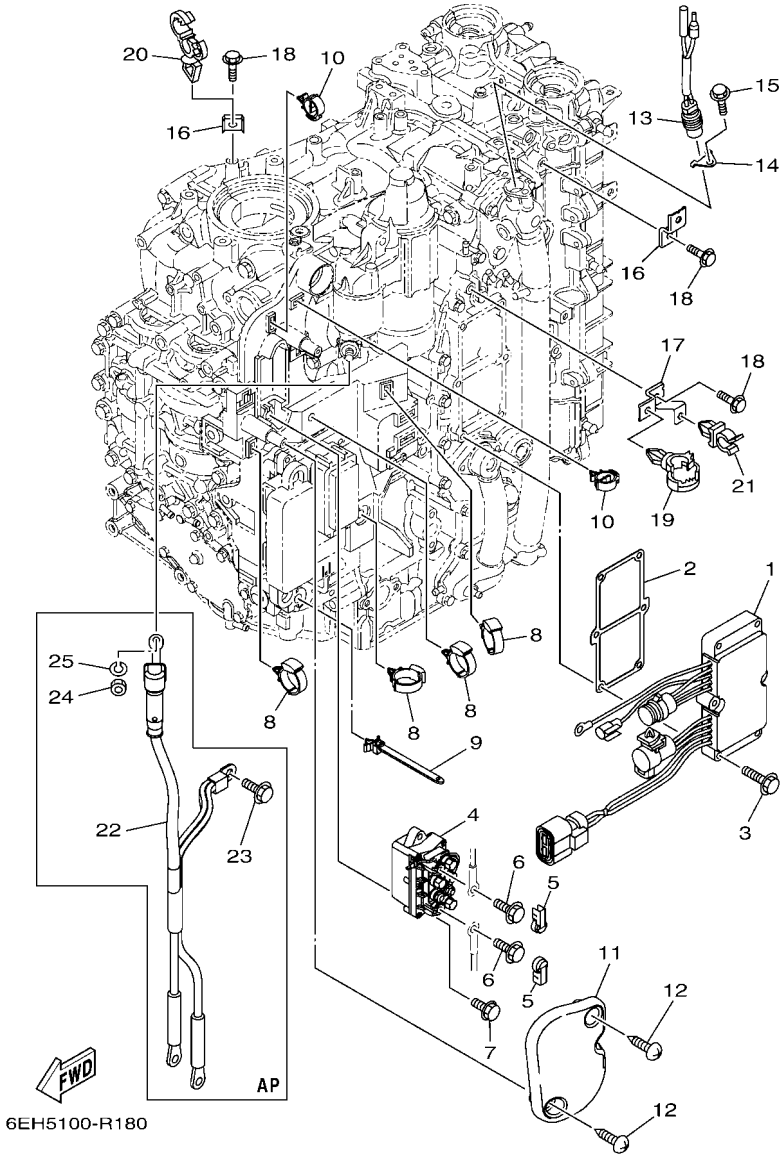


## FIG. 18 ELECTRICAL 2 — PARTIE ELECTRIQUE 2

| REF. NO. | PART NO. N° PIECES | DESCRIPTION DESCRIPTION | 6DAB | 6DBB | | | | REMARKS REMARQUES |
|---|---|---|---|---|---|---|---|---|
| 1 | 6DA–81960–10 | RECTIFIER & REGULATOR ASSY<br>REDRESSEUR REGULATEUR CPLT | 1 | 1 | | | | |
| 2 | 6DA–81975–01 | PLATE, RECTIFIER FITTING<br>PLAQUE, FIXATION DU REDRESSEUR | 1 | 1 | | | | |
| 3 | 97E95–06535 | BOLT, HEXAGON W/W DEEP RECESS<br>VIS HEXAGONAL AVC RONDELLE | 6 | 6 | | | | |
| 4 | 63P–81950–00 | RELAY ASSY<br>RELAIS COMPLET | 1 | 1 | | | | |
| 5 | 6P2–8183X–00 | CAP, TERMINAL<br>COUVERCLE, BORNE | 2 | 2 | | | | |
| 6 | 97E95–06610 | BOLT, HEXAGON W/W DEEP RECESS<br>VIS HEXAGONAL AVC RONDELLE | 2 | 2 | | | | |
| 7 | 97E95–06520 | BOLT, HEXAGON W/W DEEP RECESS<br>VIS HEXAGONAL AVC RONDELLE | 2 | 2 | | | | |
| 8 | 90464–12183 | CLAMP<br>BRIDE | 4 | 4 | | | | |
| 9 | 90464–12089 | CLAMP<br>BRIDE | 1 | 1 | | | | |
| 10 | 90464–18246 | CLAMP<br>BRIDE | 2 | 2 | | | | |
| 11 | 6DA–81942–01 | COVER<br>COUVERCLE | 1 | 1 | | | | |
| 12 | 90169–05M00 | SCREW, TRUSS HEAD TAPPING<br>VIS, TETE FRAISEE | 2 | 2 | | | | |
| 13 | 6P2–82560–01 | THERMO SWITCH ASSY<br>THERMO-CONTACT COMPLET | 1 | 1 | | | | |
| 14 | 6E9–82588–00 | PLATE<br>PLAQUE | 1 | 1 | | | | |
| 15 | 95D95–06012 | BOLT, FLANGE DEEP RECESS<br>BOULON FIXATION | 1 | 1 | | | | |
| 16 | 6DA–82388–00 | PLATE<br>PLAQUETTE | 2 | 2 | | | | |
| 17 | 6DA–82389–00 | PLATE 2<br>PLAQUETTE 2 | 1 | 1 | | | | |
| 18 | 95D95–06016 | BOLT, FLANGE DEEP RECESS<br>BOULON FIXATION | 3 | 3 | | | | |
| 19 | 90464–20181 | CLAMP<br>BRIDE | 1 | 1 | | | | |
| 20 | 90464–13249 | CLAMP<br>BRIDE | 1 | 1 | | | | |
| 21 | 90464–09008 | CLAMP<br>BRIDE | 1 | 1 | | | | |
| 22 | 6DA–82105–02 | BATTERY CABLE<br>CABLE DE BATTERIE | 1 | 1 | | | | AP<br>AP |
| 23 | 95D95–08016 | BOLT, FLANGE DEEP RECESS<br>BOULON FIXATION | 1 | 1 | | | | AP<br>AP |
| 24 | 95333–08600 | NUT<br>ECROU | 1 | 1 | | | | AP<br>AP |
| 25 | 92903–08100 | WASHER, SPRING<br>RONDELLE, GROWER | 1 | 1 | | | | AP<br>AP |

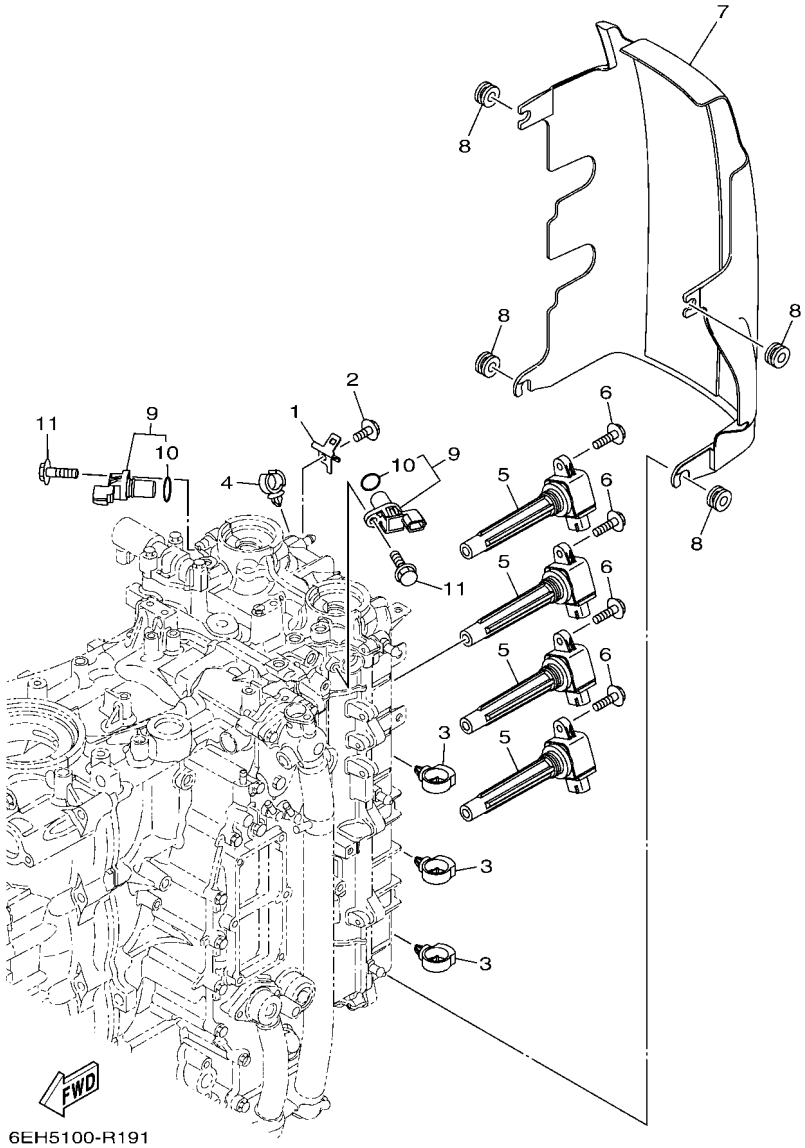


## FIG. 19 ELECTRICAL 3 — PARTIE ELECTRIQUE 3

| REF. NO. | PART NO. N° PIECES | DESCRIPTION DESCRIPTION | 6DAB | 6DBB | | | | REMARKS REMARQUES |
|---|---|---|---|---|---|---|---|---|
| 1 | 6D8–82389–01 | PLATE 2<br>PLAQUETTE 2 | 1 | 1 | | | | |
| 2 | 95D95–06012 | BOLT, FLANGE DEEP RECESS<br>BOULON FIXATION | 1 | 1 | | | | |
| 3 | 90464–20181 | CLAMP<br>BRIDE | 3 | 3 | | | | |
| 4 | 90464–13249 | CLAMP<br>BRIDE | 1 | 1 | | | | |
| 5 | 6CB–82310–02 | IGNITION COIL ASSY<br>BOBINE D'ALLUMAGE | 4 | 4 | | | | |
| 6 | 95D95–06025 | BOLT, FLANGE DEEP RECESS<br>BOULON FIXATION | 4 | 4 | | | | |
| 7 | 6DA–82314–01 | COVER, IGNITION COIL<br>COUVERCLE, BOBINE D'ALLUMAGE | 1 | 1 | | | | |
| 8 | 90480–12314 | GROMMET<br>PASSE-FIL | 4 | 4 | | | | |
| 9 | 6P2–85896–00 | SENSOR, CAM POSITION<br>SONDE DE CAME | 2 | 2 | | | | |
| 10 | 6P2–85075–00 | .O-RING<br>.JOINT TORIQUE | 1 | 1 | | | | |
| 11 | 97E95–06520 | BOLT, HEXAGON W/W DEEP RECESS<br>VIS HEXAGONAL AVC RONDELLE | 2 | 2 | | | | |

## FIG. 20 ELECTRICAL 4 — PARTIE ELECTRIQUE 4

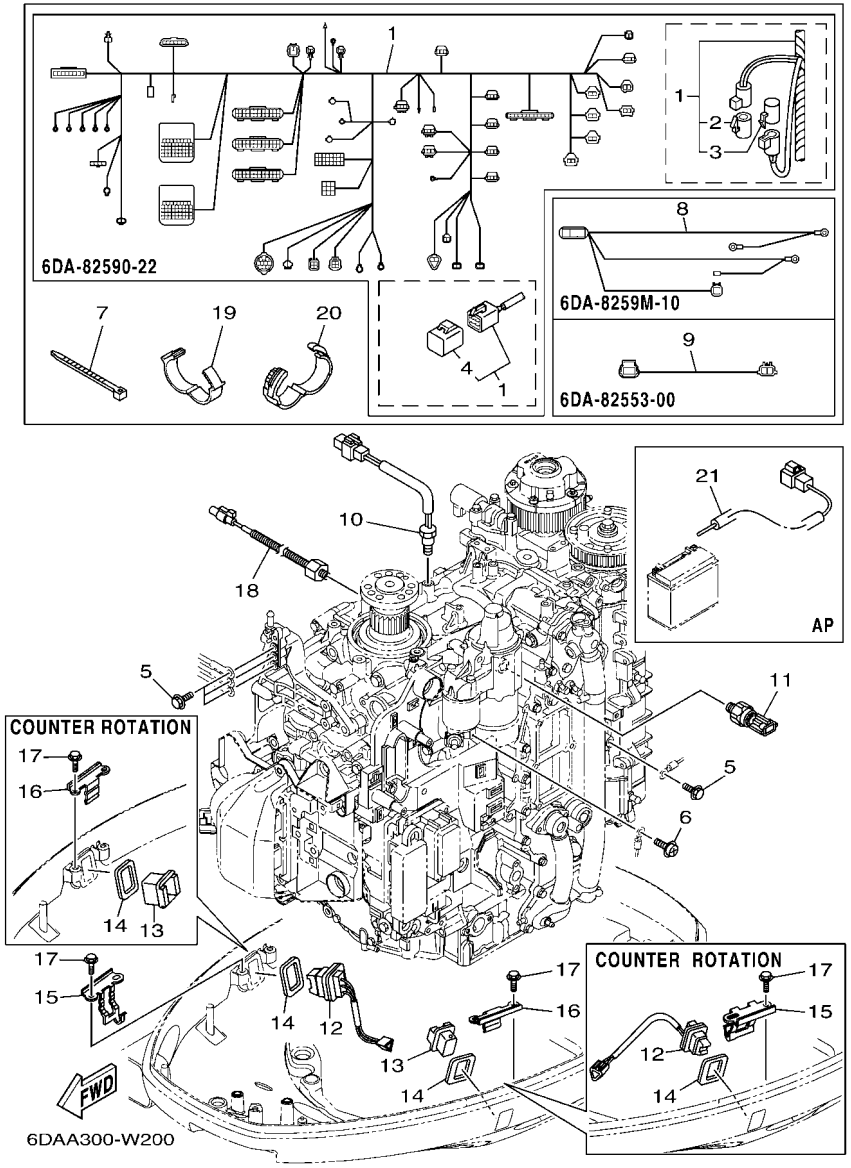


| REF. NO. | PART NO. N° PIECES | DESCRIPTION DESCRIPTION | 6DAB | 6DBB | | | | REMARKS REMARQUES |
|---|---|---|---|---|---|---|---|---|
| 1 | 6DA–82590–22 | WIRE HARNESS ASSY<br>FAISCEAU DE FILS COMPLET | 1 | 1 | | | | |
| 2 | 6DA–82582–00 | .CAP 1 (FEMALE)<br>.BOUCHON 1 (FEMME) | 1 | 1 | | | | |
| 3 | 6DA–82582–10 | .CAP 1 (MALE)<br>.BOUCHON 1 (MALE) | 1 | 1 | | | | |
| 4 | 6Y8–82582–11 | .CAP 1 (4PIN)<br>.COUVERCLE 1 (4P) | 1 | 1 | | | | |
| 5 | 97E95–06516 | BOLT, HEXAGON W/W DEEP RECESS<br>VIS HEXAGONAL AVC RONDELLE | 4 | 4 | | | | |
| 6 | 97985–04308 | SCREW, WITH WASHER<br>VIS, AVEC RONDELLE | 1 | 1 | | | | |
| 7 | 90465–11M59 | CLAMP<br>BRIDE | 1 | 1 | | | | |
| 8 | 6DA–8259M–10 | WIRE HARNESS ASSY 2<br>FAISCEAU DE FILS | 1 | 1 | | | | |
| 9 | 6DA–82553–00 | EXTENSION, WIRE LEAD<br>EXTENSION, FAISCEAU | 1 | 1 | | | | |
| 10 | 6CB–85790–00 | THERMOSENSOR ASSY<br>SENSITOMETRE | 1 | 1 | | | | |
| 11 | 6AW–83651–01 | SENDER, OIL PRESSURE<br>RACCORD, PRESSION D'HUILE | 1 | 1 | | | | |
| 12 | 69J–82563–01 | TRIM & TILT SWITCH ASSY<br>INCLINER ET PARER COMMUTATEUR | 1 | 1 | | | | |
| 13 | 69J–42723–01 | COVER, BOTTOM<br>COUVERCLE | 1 | 1 | | | | |
| 14 | 69J–82587–01 | GASKET<br>JOINT | 2 | 2 | | | | |
| 15 | 63P–83614–01 | BRACKET<br>SUPPORT | 1 | 1 | | | | |
| 16 | 6DA–83614–00 | BRACKET<br>SUPPORT | 1 | 1 | | | | |
| 17 | 95D95–06012 | BOLT, FLANGE DEEP RECESS<br>BOULON FIXATION | 4 | 4 | | | | |
| 18 | 6CJ–85780–01 | SENSOR, KNOCK<br>SONDE DE COGNEMENT | 1 | 1 | | | | |
| 19 | 90464–26001 | CLAMP<br>BRIDE | 5 | 5 | | | | |
| 20 | 90464–28003 | CLAMP<br>BRIDE | 2 | 2 | | | | |
| 21 | 69J–81949–03 | WIRE, LEAD (ISOLATOR, 3.8M )<br>FIL (ISOLATOR, 3.8M) | 1 | 1 | | | | AP<br>AP |

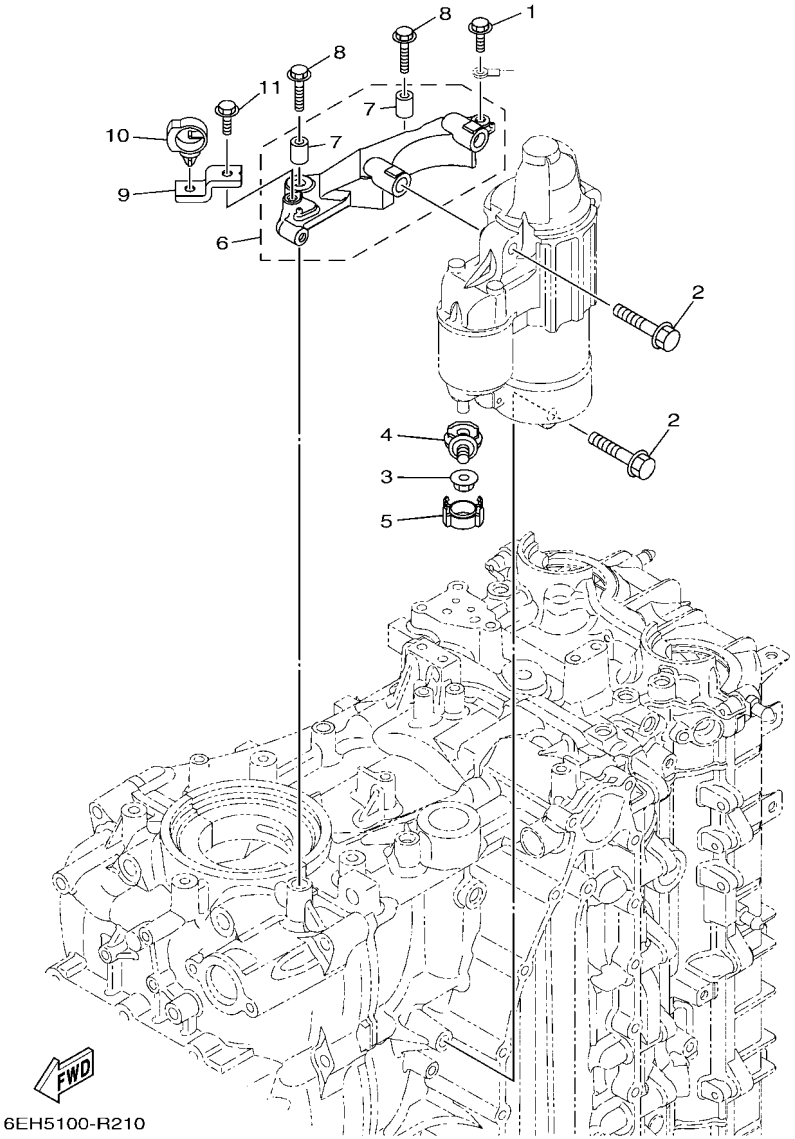


## FIG. 21 ELECTRICAL 5 — PARTIE ELECTRIQUE 5

| REF. NO. | PART NO. N° PIECES | DESCRIPTION DESCRIPTION | 6DAB | 6DBB | | | | REMARKS REMARQUES |
|---|---|---|---|---|---|---|---|---|
| 1 | 97E95–06516 | BOLT, HEXAGON W/W DEEP RECESS<br>VIS HEXAGONAL AVC RONDELLE | 1 | 1 | | | | |
| 2 | 97513–08545 | BOLT, WITH WASHER<br>VIS HEXAGONAL AVC RONDELLE | 3 | 3 | | | | |
| 3 | 90179–08003 | NUT<br>ECROU | 1 | 1 | | | | |
| 4 | 60V–81925–00 | TERMINAL<br>BORNE | 1 | 1 | | | | |
| 5 | 68F–82582–00 | CAP,1<br>COUVERCLE 1 | 1 | 1 | | | | |
| 6 | 6DA–81822–00 | BRACKET, STARTING MOTOR<br>SUPPORT, DEMARREUR ELECTRIQUE | 1 | 1 | | | | |
| 7 | 99590–10114 | .PIN, DOWEL<br>.GOUJON, D'ASSEMBLAGE | 2 | 2 | | | | |
| 8 | 90105–08M87 | BOLT, FLANGE<br>BOULON, A COLLERETTE | 2 | 2 | | | | |
| 9 | 6DA–82388–00 | PLATE<br>PLAQUETTE | 1 | 1 | | | | |
| 10 | 90464–20181 | CLAMP<br>BRIDE | 1 | 1 | | | | |
| 11 | 95D95–06016 | BOLT, FLANGE DEEP RECESS<br>BOULON FIXATION | 1 | 1 | | | | |

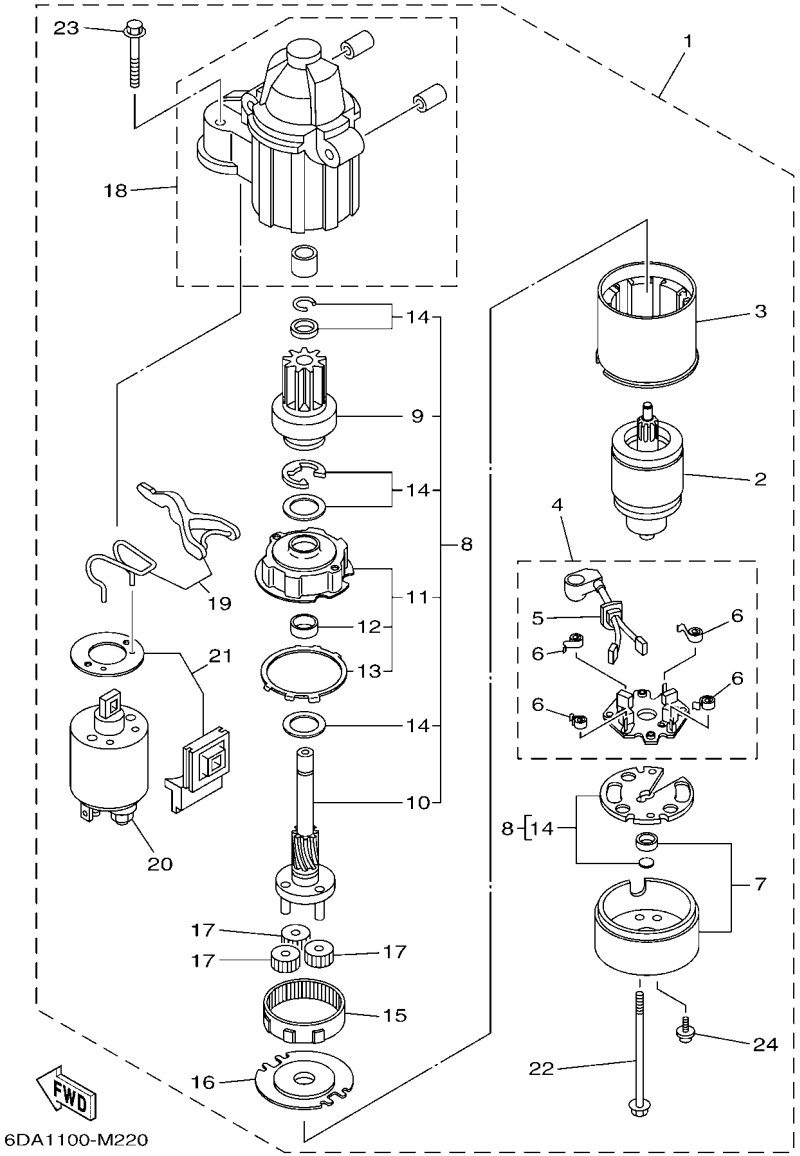


## FIG. 22 STARTING MOTOR — DEMARREUR ELECTRIQUE

| REF. NO. | PART NO. N° PIECES | DESCRIPTION DESCRIPTION | 6DAB | 6DBB | | | | REMARKS REMARQUES |
|---|---|---|---|---|---|---|---|---|
| 1 | 6CB–81800–02 | STARTING MOTOR ASSY<br>DEMARREUR ELECTRIQUE COMPLET | 1 | 1 | | | | |
| 2 | 67F–81850–00 | .ARMATURE ASSY<br>.INDUIT | 1 | 1 | | | | |
| 3 | 67F–81810–00 | .STATOR ASSY<br>.STATOR COMPLET | 1 | 1 | | | | |
| 4 | 69J–81840–11 | .BRUSH HOLDER ASSY<br>.SUPPORT DE CHARBON | 1 | 1 | | | | |
| 5 | 69J–81801–11 | ..BRUSH SET<br>..JEU DE BROSSE | 1 | 1 | | | | |
| 6 | 67F–81813–00 | ..SPRING, BRUSH<br>..RESSORT, DE CHARBON | 4 | 4 | | | | |
| 7 | 6CB–81820–00 | .REAR BRACKET ASSY<br>.SUPPORT ARRIERE COMPLET | 1 | 1 | | | | |
| 8 | 6CB–81807–00 | .GEAR ASSY, STARTING MOTOR<br>.PIGNON, DEMARREUR ELECTRIQUE | 1 | 1 | | | | |
| 9 | 6CB–81832–00 | ..CLUTCH, OVER RUN<br>..EMBRAYAGE, ROUE LIBRE | 1 | 1 | | | | |
| 10 | 6CB–81836–00 | ..SHAFT, PINION<br>..AXE, PIGNON | 1 | 1 | | | | |
| 11 | 67F–81821–00 | ..BRACKET, CENTER 1<br>..SUPPORT, CENTRE 1 | 1 | 1 | | | | |
| 12 | 67F–81841–00 | ...BEARING<br>...ROULEMENT | 1 | 1 | | | | |
| 13 | 67F–8183R–00 | ...GASKET<br>...JOINT | 1 | 1 | | | | |
| 14 | 6CB–81809–00 | ..WASHER KIT<br>..JEU DE RONDELLES | 1 | 1 | | | | |
| 15 | 67F–81891–00 | .GEAR, RING<br>.ROUE DENTEE | 1 | 1 | | | | WITH 67F-8183R-00<br>WITH 67F-8183R-00 |
| 16 | 67F–81830–00 | .BRACKET, CENTER 2<br>.SUPPORT, CENTRE 2 | 1 | 1 | | | | |
| 17 | 60V–8183T–00 | .GEAR, IDLER<br>.PIGNON, INTERMEDIAIRE | 3 | 3 | | | | |
| 18 | 6CB–81842–00 | .COVER<br>.COUVERCLE | 1 | 1 | | | | |
| 19 | 6C5–81839–00 | .LEVER ASSY<br>.LEVIER COMPLET | 1 | 1 | | | | |
| 20 | 6C5–81941–01 | .STARTER RELAY ASSY<br>.LANCEUR RELAIS (ENS.) | 1 | 1 | | | | |
| 21 | 6C5–81869–00 | .COVER, DUST<br>.COUVERCLE, POUSSIERE | 1 | 1 | | | | |
| 22 | 6CB–81826–00 | .BOLT<br>.BOULON | 2 | 2 | | | | |
| 23 | 69J–81828–00 | .BOLT 2<br>.BOULON 2 | 2 | 2 | | | | |
| 24 | 67F–81846–00 | .SCREW<br>.VIS | 2 | 2 | | | | |

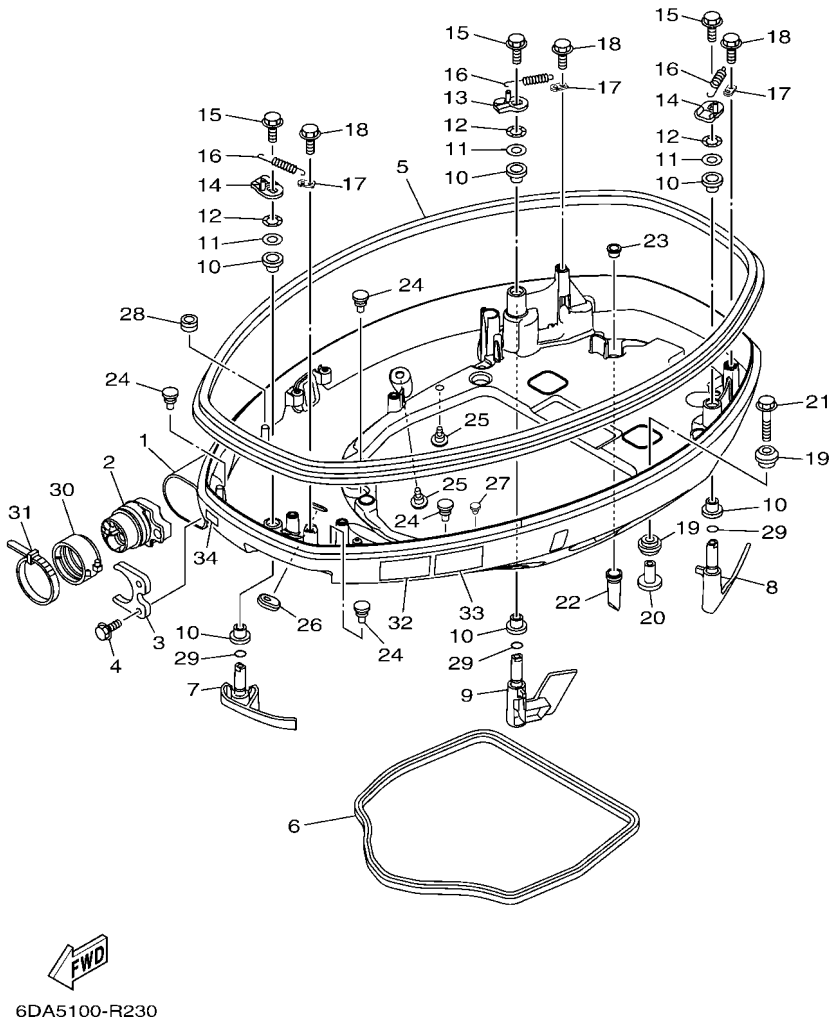


## FIG. 23 BOTTOM COWLING 1 — CAPOT INFERIEUR 1

| REF. NO. | PART NO. N° PIECES | DESCRIPTION DESCRIPTION | 6DAB | 6DBB | | | | REMARKS REMARQUES |
|---|---|---|---|---|---|---|---|---|
| 1 | 6DA–42710–00–8D | BOTTOM COWLING ASSY<br>ENS. EMBASE | 1 | 1 | | | | |
| 2 | 6DA–42725–03 | GROMMET<br>PASSE-FIL | 1 | 1 | | | | |
| 3 | 6CB–42761–00 | STOPPER<br>PLAQUETTE | 1 | 1 | | | | |
| 4 | 95D95–06014 | BOLT, FLANGE DEEP RECESS<br>BOULON FIXATION | 2 | 2 | | | | |
| 5 | 6DA–42615–00 | SEAL<br>JOINT | 1 | 1 | | | | |
| 6 | 63P–42716–01 | RUBBER SEAL 1<br>JOINT EN CAOUTCHOUC 1 | 1 | 1 | | | | |
| 7 | 6DA–42815–01–8D | LEVER, CLAMP 1<br>LEVIER, PRESSE 1 | 1 | 1 | | | | |
| 8 | 6DA–42816–02–8D | LEVER, CLAMP 2<br>LEVIER, PRESSE 2 | 1 | 1 | | | | |
| 9 | 6DA–42817–02–8D | LEVER, CLAMP 3<br>LEVIER, PRESSE 3 | 1 | 1 | | | | |
| 10 | 90386–15M73 | BUSH<br>DOUILLE | 6 | 6 | | | | |
| 11 | 90201–156J2 | WASHER, PLATE<br>RONDELLE, PLATE | 3 | 3 | | | | |
| 12 | 90206–15M18 | WASHER, WAVE<br>RONDELLE, ONDULEE | 3 | 3 | | | | |
| 13 | 6CB–42818–00 | LEVER, CLAMP 4<br>LEVIER, PRESSE 4 | 1 | 1 | | | | |
| 14 | 6CB–42819–00 | LEVER, CLAMP 5<br>LEVIER, PRESSE 5 | 2 | 2 | | | | |
| 15 | 95D95–08012 | BOLT, FLANGE DEEP RECESS<br>BOULON FIXATION | 3 | 3 | | | | |
| 16 | 90506–22001 | SPRING, TENSION<br>RESSORT, TENSION | 3 | 3 | | | | |
| 17 | 66T–43144–00 | HOOK, SPRING<br>CROCHET | 3 | 3 | | | | |
| 18 | 95D95–06012 | BOLT, FLANGE DEEP RECESS<br>BOULON FIXATION | 3 | 3 | | | | |
| 19 | 90480–22M81 | GROMMET<br>PASSE-FIL | 8 | 8 | | | | |
| 20 | 90387–08M37 | COLLAR<br>COLLERETTE | 4 | 4 | | | | |
| 21 | 90119–08187 | BOLT, WITH WASHER<br>BOULON, AVEC RONDELLE | 4 | 4 | | | | |
| 22 | 6DA–42717–01 | RUBBER, SEAL 2<br>JOINT EN CAOUTCHOUC 2 | 4 | 4 | | | | |
| 23 | 6DA–42384–00 | SEAL, CAP<br>JOINT, CAPUCHON | 4 | 4 | | | | |
| 24 | 6H4–42748–01 | GROMMET<br>PASSE-FIL | 4 | 4 | | | | |
| 25 | 6P2–44391–00 | NIPPLE, HOSE<br>RACCORD D'ESSENCE | 2 | 2 | | | | |
| 26 | 6KA–42727–00 | GROMMET<br>PASSE-FIL | 1 | 1 | | | | |
| 27 | 90269–07003 | RIVET<br>RIVET | 1 | 1 | | | | |

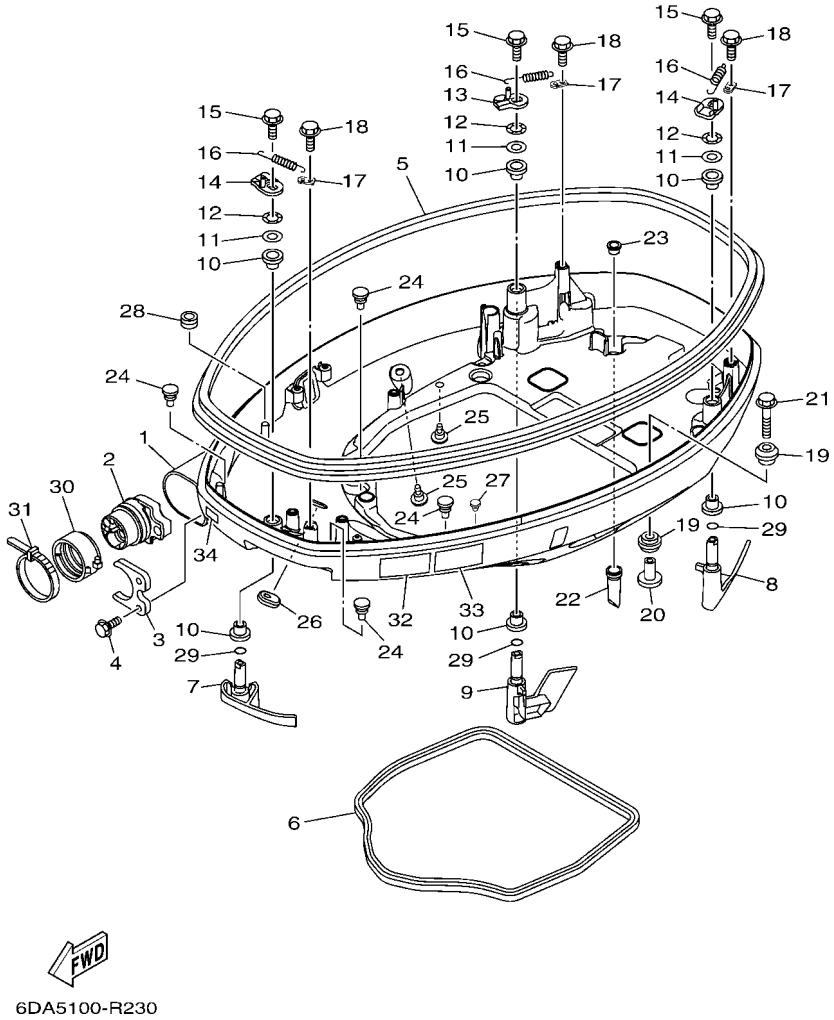


## FIG. 23 BOTTOM COWLING 1 — CAPOT INFERIEUR 1

| REF. NO. | PART NO. N° PIECES | DESCRIPTION DESCRIPTION | 6DAB | 6DBB | | | | REMARKS REMARQUES |
|---|---|---|---|---|---|---|---|---|
| 28 | 90480–13163 | GROMMET<br>PASSE-FIL | 1 | 1 | | | | |
| 29 | 93210–13M63 | O-RING<br>JOINT TORIQUE | 3 | 3 | | | | |
| 30 | 68F–42753–00 | FASTNER<br>ATTACHE | 1 | 1 | | | | AP<br>AP |
| 31 | 90464–20258 | CLAMP<br>BRIDE | 1 | 1 | | | | AP<br>AP |
| 32 | 6EE–42794–40 | LABEL, WARNING (GENERAL)<br>ETIQUETTE, AVERTISSEMENT | 1 | 1 | | | | |
| 33 | 6EE–42794–50 | LABEL, WARNING (GENERAL)<br>ETIQUETTE, AVERTISSEMENT | 1 | 1 | | | | |
| 34 | 6AH–81996–00 | MARK<br>MARQUE | 1 | 1 | | | | |

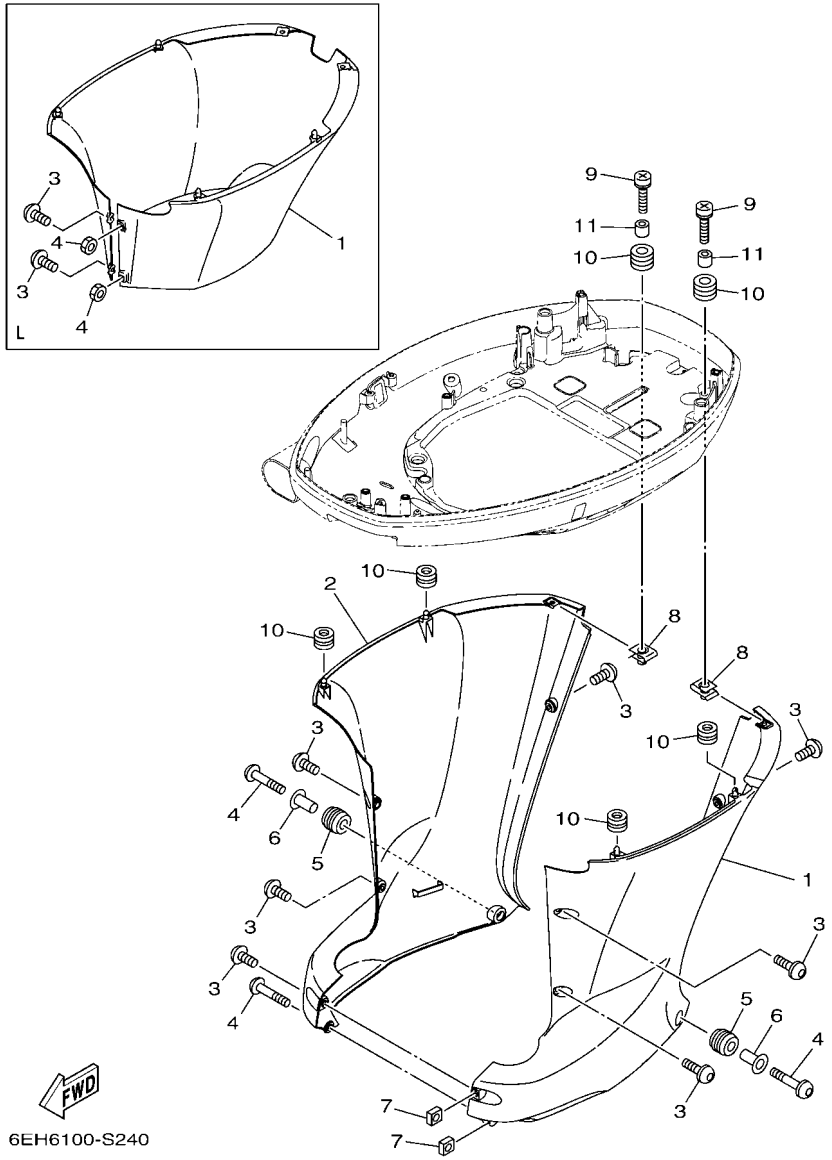


## FIG. 24 BOTTOM COWLING 2 — CAPOT INFERIEUR 2

| REF. NO. | PART NO. N° PIECES | DESCRIPTION DESCRIPTION | 6DAB | 6DBB | | | | REMARKS REMARQUES |
|---|---|---|---|---|---|---|---|---|
| 1 | 6DA–42740–01 | APRON COMPLETE 1<br>CAPOT LATERAL COMPLETE 1 | 1 | 1 | | | | X(25.3")<br>X(25.3") |
| | 6DA–42741–11–8D | APRON<br>CAPOT LATERAL | 1 | | | | | L(20.3")<br>L(20.3") |
| 2 | 6DA–42770–01 | APRON COMPLETE 2<br>CAPOT LATERAL COMPLETE 2 | 1 | 1 | | | | X(25.3")<br>X(25.3") |
| 3 | 90111–06144 | BOLT, HEXAGON SOCKET BUTTON<br>BOULON | 7 | 7 | | | | X(25.3")<br>X(25.3") |
| | 90159–06M28 | SCREW, WITH WASHER<br>VIS, AVEC RONDELLE | 2 | | | | | L(20.3")<br>L(20.3") |
| 4 | 90111–06142 | BOLT, HEXAGON SOCKET BUTTON<br>BOULON | 3 | 3 | | | | X(25.3")<br>X(25.3") |
| | 95380–06600 | NUT, HEXAGON<br>ECROU | 2 | | | | | L(20.3")<br>L(20.3") |
| 5 | 90480–16009 | GROMMET<br>PASSE-FIL | 2 | 2 | | | | X(25.3")<br>X(25.3") |
| 6 | 90387–07028 | COLLAR<br>COLLERETTE | 2 | 2 | | | | X(25.3")<br>X(25.3") |
| 7 | 90173–06001 | NUT, SQUARE<br>ECROU, CARRE | 2 | 2 | | | | X(25.3")<br>X(25.3") |
| 8 | 90183–061A8 | NUT, SPRING<br>ECROU, RESSORT | 2 | 2 | | | | |
| 9 | 90159–06053 | SCREW, WITH WASHER<br>VIS, AVEC RONDELLE | 2 | 2 | | | | |
| 10 | 90480–13M24 | GROMMET<br>PASSE-FIL | 6 | 6 | | | | |
| 11 | 90387–06M43 | COLLAR<br>COLLERETTE | 2 | 2 | | | | |

## FIG. 25 BOTTOM COWLING 3 — CAPOT INFERIEUR 3

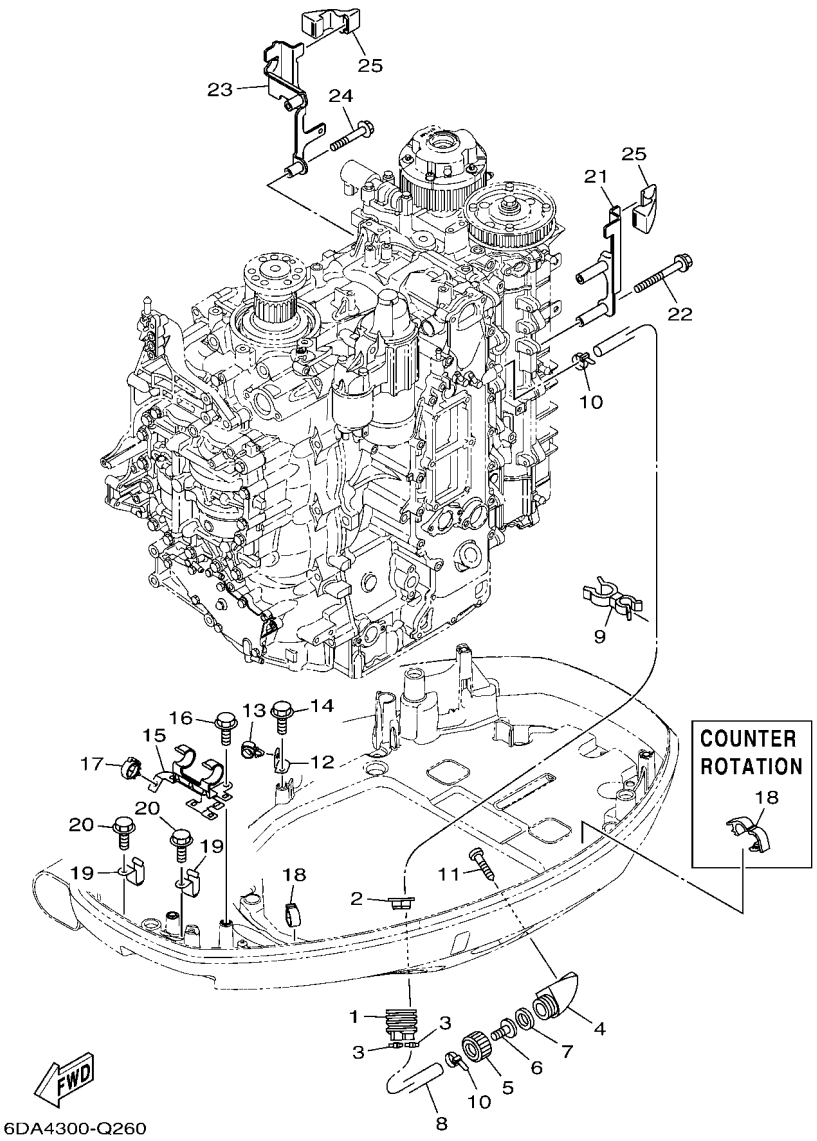


| REF. NO. | PART NO. N° PIECES | DESCRIPTION DESCRIPTION | 6DAB | 6DBB | | | | REMARKS REMARQUES |
|---|---|---|---|---|---|---|---|---|
| 1 | 6H1–42726–22 | GROMMET<br>PASSE-FIL | 1 | 1 | | | | |
| 2 | 6BG–42384–00 | SEAL, CAP<br>JOINT, CAPUCHON | 1 | 1 | | | | |
| 3 | 90465–11M10 | CLAMP<br>BRIDE | 2 | 2 | | | | |
| 4 | 6AW–12572–00 | ADAPTER<br>ADAPTATEUR | 1 | 1 | | | | |
| 5 | 6R3–12581–00 | JOINT, HOSE 1<br>JOINT DE TUYAU | 1 | 1 | | | | |
| 6 | 6AW–12582–00 | JOINT, HOSE 2<br>RACCORD DE TUYAU 1 | 1 | 1 | | | | |
| 7 | 6R3–12583–00 | GASKET, HOSE JOINT<br>JOINT | 1 | 1 | | | | |
| 8 | 6DA–42541–00 | PIPE 1<br>TUYAU 1 | 1 | 1 | | | | |
| 9 | 90464–21256 | CLAMP<br>BRIDE | 1 | 1 | | | | |
| 10 | 90465–11M10 | CLAMP<br>BRIDE | 2 | 2 | | | | |
| 11 | 97780–60520 | SCREW, TAPPING<br>VIS, TETE BOMBEE | 2 | 2 | | | | |
| 12 | 63P–42756–00 | STAY, CLAMP<br>SUPPORT, COLLIER | 1 | 1 | | | | |
| 13 | 90464–13249 | CLAMP<br>BRIDE | 1 | 1 | | | | |
| 14 | 95D95–06012 | BOLT, FLANGE DEEP RECESS<br>BOULON FIXATION | 1 | 1 | | | | |
| 15 | 6DA–8366G–00 | BRACKET 3<br>SUPPORT 3 | 1 | 1 | | | | |
| 16 | 95D95–06012 | BOLT, FLANGE DEEP RECESS<br>BOULON FIXATION | 2 | 2 | | | | |
| 17 | 90464–18246 | CLAMP<br>BRIDE | 1 | 1 | | | | |
| 18 | 90464–18004 | CLAMP<br>BRIDE | 1 | | | | | |
| | 90464–18004 | CLAMP<br>BRIDE | | 2 | | | | |
| 19 | 90462–12013 | CLAMP<br>BRIDE | 2 | 2 | | | | |
| 20 | 95D95–06012 | BOLT, FLANGE DEEP RECESS<br>BOULON FIXATION | 2 | 2 | | | | |
| 21 | 6DA–11998–00 | BRACKET 1<br>SUPPORT 1 | 1 | 1 | | | | |
| 22 | 95D95–06065 | BOLT, FLANGE DEEP RECESS<br>BOULON FIXATION | 2 | 2 | | | | |
| 23 | 6DA–11999–00 | BRACKET 2<br>SUPPORT 2 | 1 | 1 | | | | |
| 24 | 95D95–06040 | BOLT, FLANGE DEEP RECESS<br>BOULON FIXATION | 2 | 2 | | | | |
| 25 | 6CB–42662–02 | DAMPER<br>AMORTISSEUR | 2 | 2 | | | | |

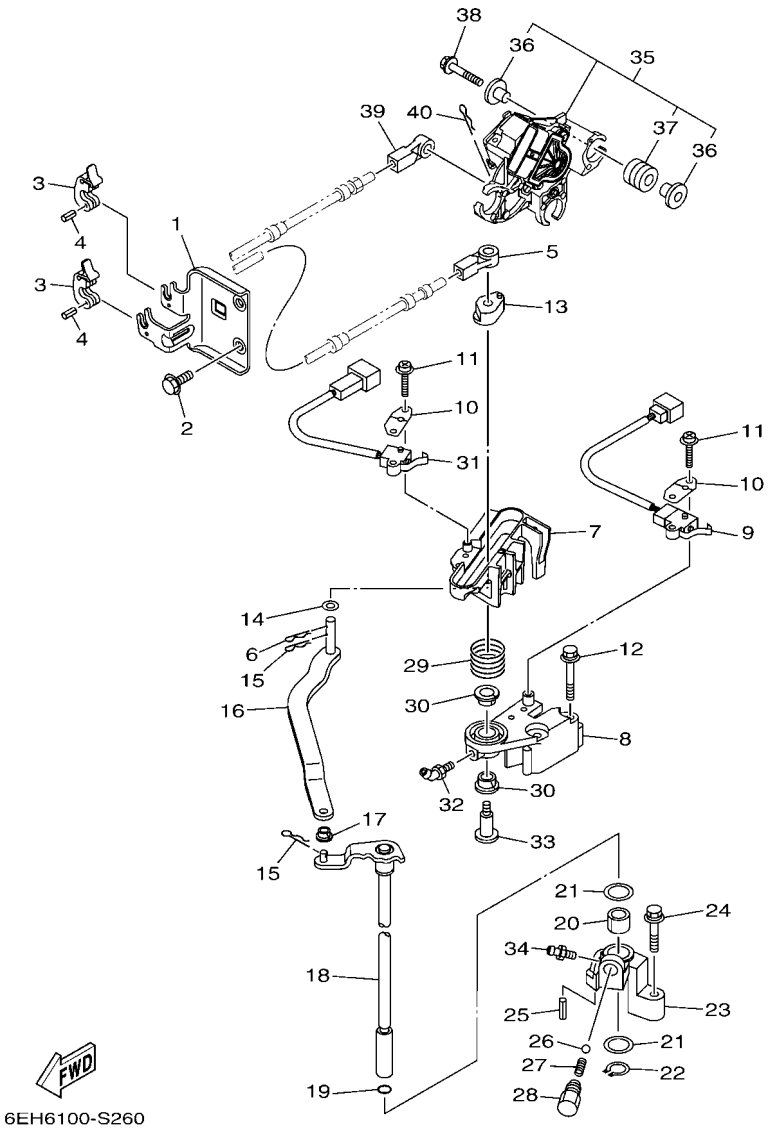


## FIG. 26 CONTROL COMMANDE

| REF. NO. | PART NO. N° PIECES | DESCRIPTION DESCRIPTION | 6DAB | 6DBB | | | | REMARKS REMARQUES |
|---|---|---|---|---|---|---|---|---|
| 1 | 6DA–48531–00 | BRACKET, REMOTE CONTROL 1<br>ETRIER 1, COMMANDE A DISTANCE | 1 | 1 | | | | |
| 2 | 95D95–08020 | BOLT, FLANGE DEEP RECESS<br>BOULON FIXATION | 2 | 2 | | | | |
| 3 | 6E5–48538–00 | CLAMP, CABLE<br>COLLIER | 2 | 2 | | | | |
| 4 | 91690–30010 | PIN, SPRING<br>AGRAFFE | 2 | 2 | | | | |
| 5 | 6E5–48344–00 | CABLE END, REMOTE CONTROL<br>CHAPE CABLE | 1 | 1 | | | | |
| 6 | 90468–18008 | CLIP<br>JONC | 1 | 1 | | | | |
| 7 | 6DA–44176–00 | BRACKET<br>SUPPORT | 1 | 1 | | | | |
| 8 | 63P–44117–01 | BRACKET<br>SUPPORT | 1 | 1 | | | | |
| 9 | 69J–8259F–00 | SWITCH ASSY<br>COMMUTATEUR | 1 | 1 | | | | |
| 10 | 61A–82588–01 | PLATE<br>PLAQUE | 2 | 2 | | | | |
| 11 | 97985–04116 | SCREW, WITH WASHER<br>VIS, AVEC RONDELLE | 4 | 4 | | | | |
| 12 | 97E95–06550 | BOLT, HEXAGON W/W DEEP RECESS<br>VIS HEXAGONAL AVC RONDELLE | 2 | 2 | | | | |
| 13 | 63P–44122–00 | BUSHING, SHIFT ROD LEVER<br>DOUILLE, LEVIER D'EMBRAYAGE | 1 | 1 | | | | |
| 14 | 90202–08M20 | WASHER, PLATE<br>RONDELLE, PLATE | 1 | 1 | | | | |
| 15 | 90468–18008 | CLIP<br>JONC | 2 | 2 | | | | |
| 16 | 6DA–44121–00 | LEVER, SHIFT ROD<br>LEVIER, TIGE D'INVERSION | 1 | 1 | | | | |
| 17 | 90386–06M12 | BUSH<br>DOUILLE | 1 | 1 | | | | |
| 18 | 6DA–44120–02 | HANDLE GEAR SHIFT ASSY<br>LEVIER D'EMBRAYAGE | 1 | 1 | | | | X(25.3")<br>X(25.3") |
| | 6DA–44120–12 | HANDLE GEAR SHIFT ASSY<br>LEVIER D'EMBRAYAGE | 1 | | | | | L(20.3")<br>L(20.3") |
| 19 | 93210–09165 | O-RING<br>JOINT TORIQUE | 1 | 1 | | | | |
| 20 | 90386–16M66 | BUSH<br>DOUILLE | 1 | 1 | | | | |
| 21 | 90202–16061 | WASHER, PLATE<br>RONDELLE, PLATE | 2 | 2 | | | | |
| 22 | 93410–16006 | CIRCLIP<br>CIRCLIP | 1 | 1 | | | | |
| 23 | 63P–44118–00 | BRACKET<br>SUPPORT | 1 | 1 | | | | |
| 24 | 97E75–06535 | BOLT, HEXAGON W/W DEEP RECESS<br>VIS HEXAGONAL AVC RONDELLE | 1 | 1 | | | | |
| 25 | 91690–30010 | PIN, SPRING<br>AGRAFFE | 1 | 1 | | | | |
| 26 | 93501–04M02 | BALL<br>BILLE | 1 | 1 | | | | |

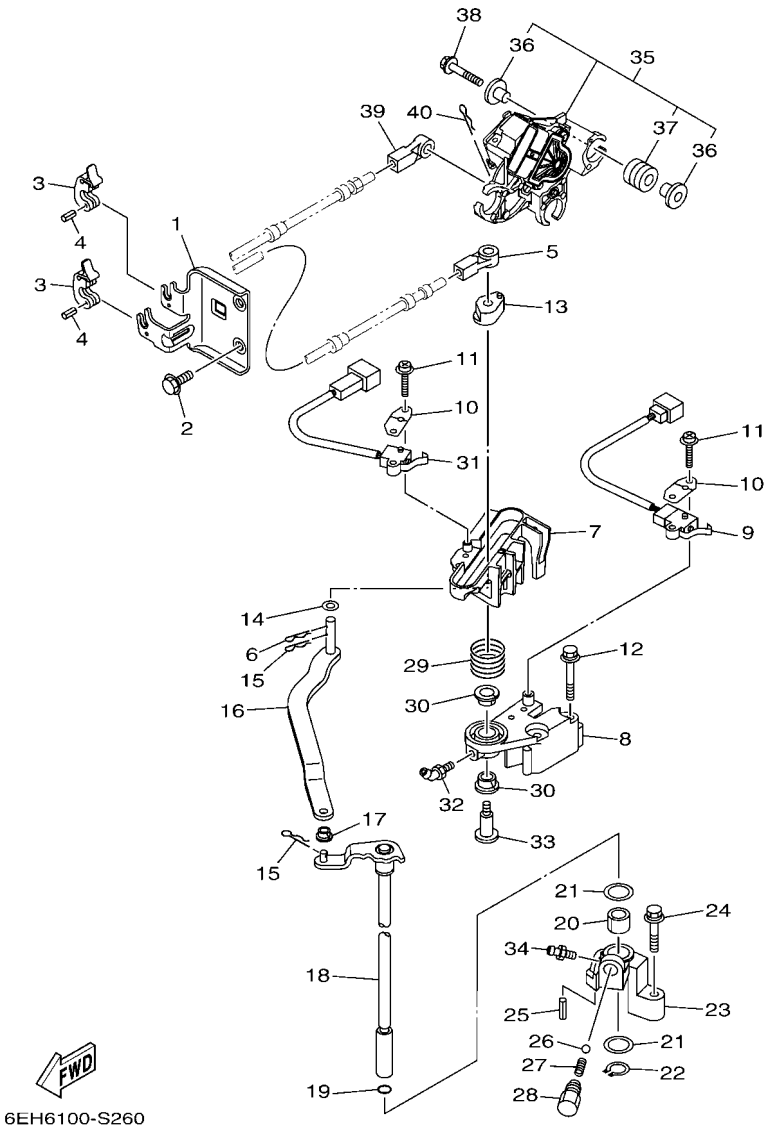


## FIG. 26 CONTROL COMMANDE

| REF. NO. | PART NO. N° PIECES | DESCRIPTION DESCRIPTION | 6DAB | 6DBB | | | | REMARKS REMARQUES |
|---|---|---|---|---|---|---|---|---|
| 27 | 90501–12082 | SPRING, COMPRESSION<br>RESSORT, COMPRESSION | 1 | 1 | | | | |
| 28 | 648–42715–00 | BUSHING 2<br>COUSSINET 2 | 1 | 1 | | | | |
| 29 | 90508–20M31 | SPRING, TORSION<br>RESSORT, TORSION | 1 | 1 | | | | |
| 30 | 90386–12069 | BUSH<br>DOUILLE | 2 | 2 | | | | |
| 31 | 60V–8259F–01 | SWITCH ASSY<br>COMMUTATEUR | 1 | 1 | | | | |
| 32 | 93700–06M01 | NIPPLE, GREASE<br>PION | 1 | 1 | | | | |
| 33 | 90109–08019 | BOLT<br>BOULON | 1 | 1 | | | | |
| 34 | 93700–06M03 | NIPPLE, GREASE<br>PION | 1 | 1 | | | | |
| 35 | 6DA–8A410–02 | SENSOR UNIT<br>UNITE DE CAPTEUR | 1 | 1 | | | | |
| 36 | 69J–13716–00 | .COLLAR<br>.COLLERETTE | 6 | 6 | | | | |
| 37 | 6CB–13593–00 | .DAMPER<br>.AMORTISSEUR | 3 | 3 | | | | |
| 38 | 90119–06297 | BOLT, WITH WASHER<br>BOULON, AVEC RONDELLE | 3 | 3 | | | | |
| 39 | 6E5–48344–00 | CABLE END, REMOTE CONTROL<br>CHAPE CABLE | 1 | 1 | | | | |
| 40 | 90468–18008 | CLIP<br>JONC | 1 | 1 | | | | |

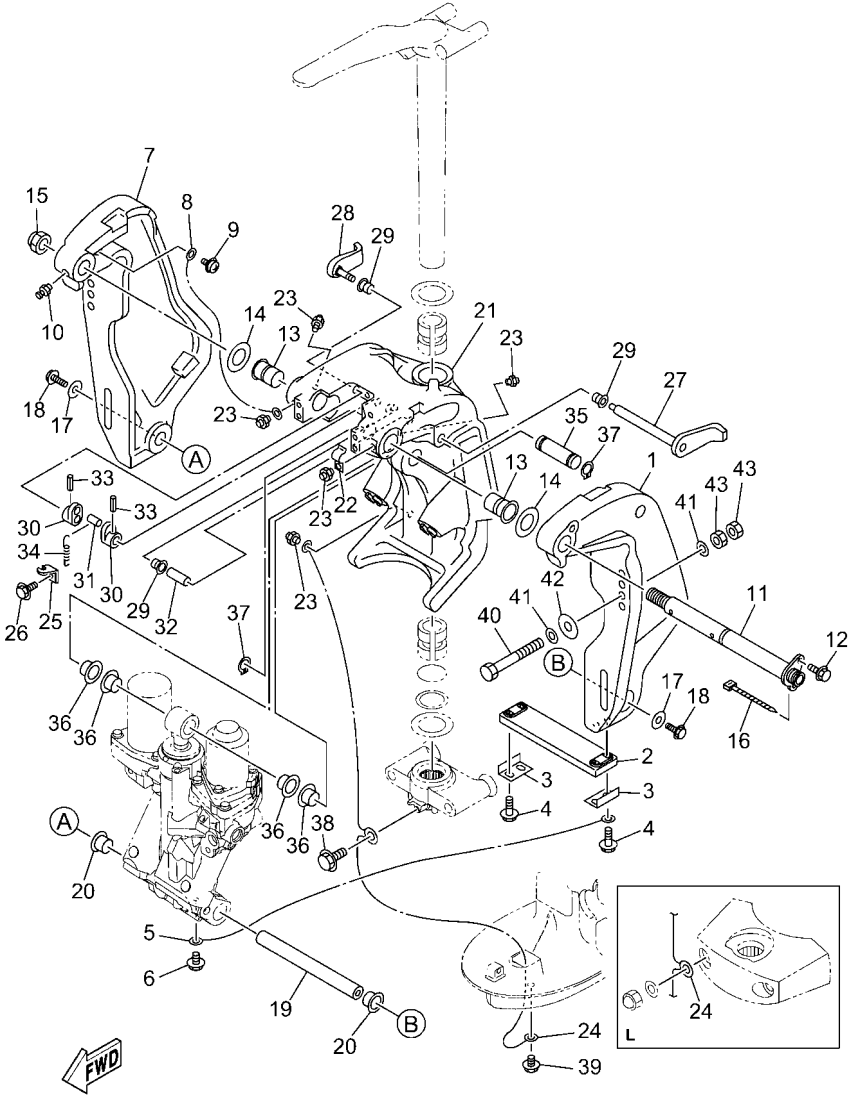


6HP7100-X280

## FIG. 27 BRACKET 1 SUPPORT 1

| REF. NO. | PART NO. N° PIECES | DESCRIPTION DESCRIPTION | 6DAB | 6DBB | | | | REMARKS REMARQUES |
|---|---|---|---|---|---|---|---|---|
| 1 | 64E–43111–02–8D | BRACKET, CLAMP 1<br>PRESSE 1 | 1 | 1 | | | | |
| 2 | 6AW–45251–00 | ANODE<br>ANODE | 1 | 1 | | | | |
| 3 | 6G5–44526–00 | PLATE<br>PLAQUE | 2 | 2 | | | | |
| 4 | 97E95–06530 | BOLT, HEXAGON W/W DEEP RECESS<br>VIS HEXAGONAL AVC RONDELLE | 4 | 4 | | | | |
| 5 | 6E5–82148–00 | WIRE, LEAD 4<br>FIL 4 | 1 | 1 | | | | |
| 6 | 97E95–06510 | BOLT, HEXAGON W/W DEEP RECESS<br>VIS HEXAGONAL AVC RONDELLE | 1 | 1 | | | | |
| 7 | 64E–43112–02–8D | BRACKET, CLAMP 2<br>PRESSE 2 | 1 | 1 | | | | |
| 8 | 6E5–82148–00 | WIRE, LEAD 4<br>FIL 4 | 1 | 1 | | | | |
| 9 | 97985–06212 | SCREW, WITH WASHER<br>VIS, AVEC RONDELLE | 1 | 1 | | | | |
| 10 | 93700–06002 | NIPPLE, GREASE<br>PION | 1 | 1 | | | | |
| 11 | 64E–43131–30 | BOLT, CLAMP BRACKET<br>BOULON, PRESSE | 1 | 1 | | | | |
| 12 | 97E95–08520 | BOLT, HEXAGON W/W DEEP RECESS<br>VIS HEXAGONAL AVC RONDELLE | 1 | 1 | | | | |
| 13 | 90386–25M31 | BUSH<br>DOUILLE | 2 | 2 | | | | |
| 14 | 90201–26M59 | WASHER, PLATE<br>RONDELLE, PLATE | 2 | 2 | | | | |
| 15 | 90185–22M11 | NUT, SELF-LOCKING<br>ECROU,AUTO-BLOQUANT | 1 | 1 | | | | |
| 16 | 90465–11M10 | CLAMP<br>BRIDE | 1 | 1 | | | | |
| 17 | 90201–10060 | WASHER, PLATE<br>RONDELLE, PLATE | 2 | 2 | | | | |
| 18 | 90119–10054 | BOLT, WITH WASHER<br>BOULON, AVEC RONDELLE | 2 | 2 | | | | |
| 19 | 6BC–43818–00 | PIN, LOWER SHOCK MOUNT<br>AXE, INFERIEUR AMORTISSEUR | 1 | 1 | | | | |
| 20 | 90386–22M98 | BUSH<br>DOUILLE | 2 | 2 | | | | |
| 21 | 64E–43311–20–8D | BRACKET, SWIVEL 1<br>SUPPORT, PIVOT 1 | 1 | 1 | | | | X(25.3")<br>X(25.3") |
| | 64E–43311–10–8D | BRACKET, SWIVEL 1<br>SUPPORT, PIVOT 1 | 1 | | | | | L(20.3")<br>L(20.3") |
| 22 | 90465–08M63 | CLAMP<br>BRIDE | 1 | 1 | | | | |
| 23 | 93700–06002 | NIPPLE, GREASE<br>PION | 5 | 5 | | | | |
| 24 | 6DA–82149–00 | WIRE, LEAD 3<br>FIL 3 | 1 | 1 | | | | X(25.3")<br>X(25.3") |
| | 66K–82149–00 | WIRE, LEAD 3<br>FIL 3 | 1 | | | | | L(20.3")<br>L(20.3") |
| 25 | 6G5–43144–00 | HOOK, SPRING<br>CROCHET | 1 | 1 | | | | |

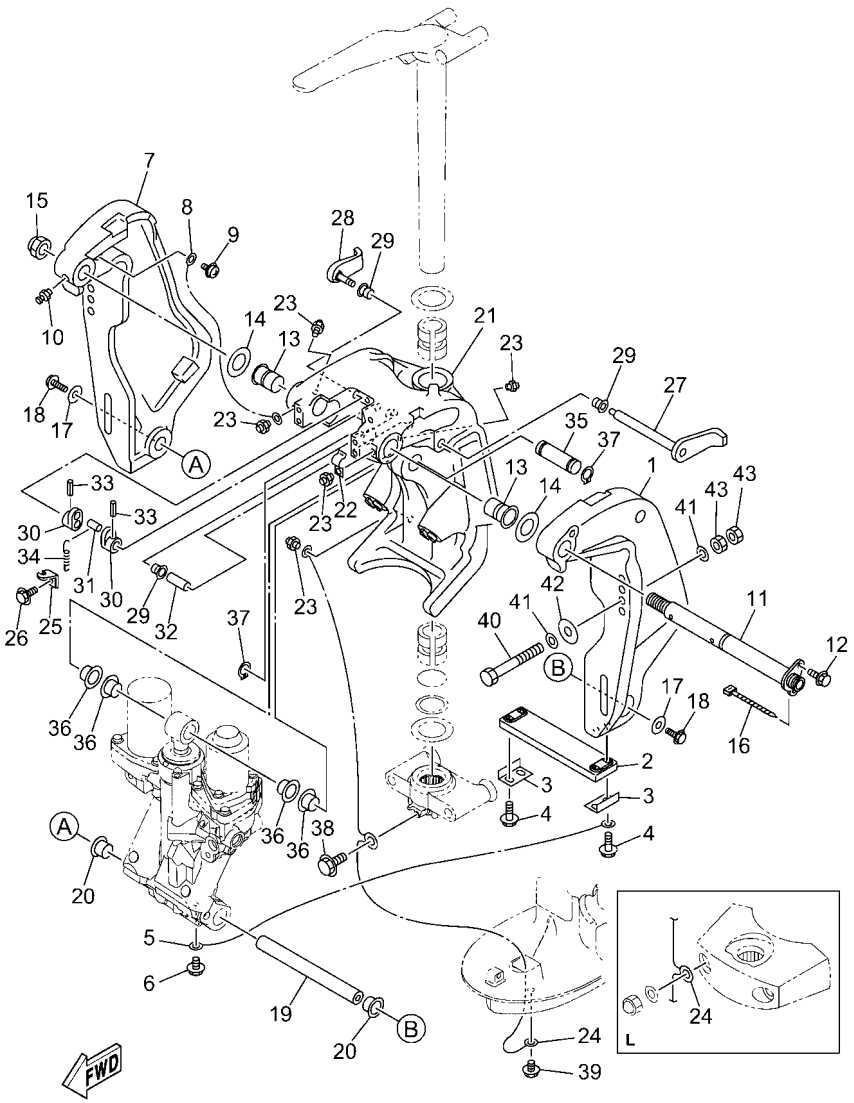


6HP7100-X280

## FIG. 27 BRACKET 1 — SUPPORT 1

| REF. NO. | PART NO. N° PIECES | DESCRIPTION DESCRIPTION | 6DAB | 6DBB | | | | REMARKS REMARQUES |
|---|---|---|---|---|---|---|---|---|
| 26 | 97E95–06512 | BOLT, HEXAGON W/W DEEP RECESS<br>VIS HEXAGONAL AVC RONDELLE | 1 | 1 | | | | |
| 27 | 6G5–43181–02 | LEVER, TILT STOP 1<br>LEVIER VERROUILLAGE RELEVAGE 1 | 1 | 1 | | | | |
| 28 | 6G5–43185–02 | LEVER, TILT STOP 2<br>LEVIER VERROUILLAGE RELEVAGE 2 | 1 | 1 | | | | |
| 29 | 90386–10M16 | BUSH<br>DOUILLE | 3 | 3 | | | | |
| 30 | 6G5–43148–00 | COLLAR, DISTANCE<br>ENTRETOISE | 2 | 2 | | | | |
| 31 | 90249–06M19 | PIN<br>GOUPILLE | 1 | 1 | | | | |
| 32 | 90387–10M05 | COLLAR<br>COLLERETTE | 1 | 1 | | | | |
| 33 | 91690–30020 | PIN, SPRING<br>AGRAFFE | 2 | 2 | | | | |
| 34 | 90506–16003 | SPRING, TENSION<br>RESSORT, TENSION | 1 | 1 | | | | |
| 35 | 64E–43126–10 | PIN, UPPER SHOCK MOUNT<br>AXE, SUPERIEUR AMORTISSEUR | 1 | 1 | | | | |
| 36 | 90386–22M98 | BUSH<br>DOUILLE | 4 | 4 | | | | |
| 37 | 93410–22M11 | CIRCLIP<br>CIRCLIP | 2 | 2 | | | | |
| 38 | 95D95–06010 | BOLT, FLANGE DEEP RECESS<br>BOULON FIXATION | 1 | 1 | | | | X(25.3")<br>X(25.3") |
| 39 | 95D95–06010 | BOLT, FLANGE DEEP RECESS<br>BOULON FIXATION | 1 | 1 | | | | |
| 40 | 90101–12065 | BOLT (L:130MM)<br>BOULON (L:130MM) | 2 | 2 | | | | UR X(25.3")<br>UR X(25.3") |
| | 90101–12065 | BOLT (L:130MM)<br>BOULON (L:130MM) | 4 | | | | | UR L(20.3")<br>UR L(20.3") |
| | 90101–12066 | BOLT (L:150MM)<br>BOULON (L:150MM) | 2 | 2 | | | | UR<br>UR |
| 41 | 90201–13M01 | WASHER, PLATE<br>RONDELLE, PLATE | 8 | 8 | | | | |
| 42 | 90201–12426 | WASHER, PLATE<br>RONDELLE, PLATE | 4 | 4 | | | | |
| 43 | 95380–12600 | NUT<br>ECROU | 8 | 8 | | | | |

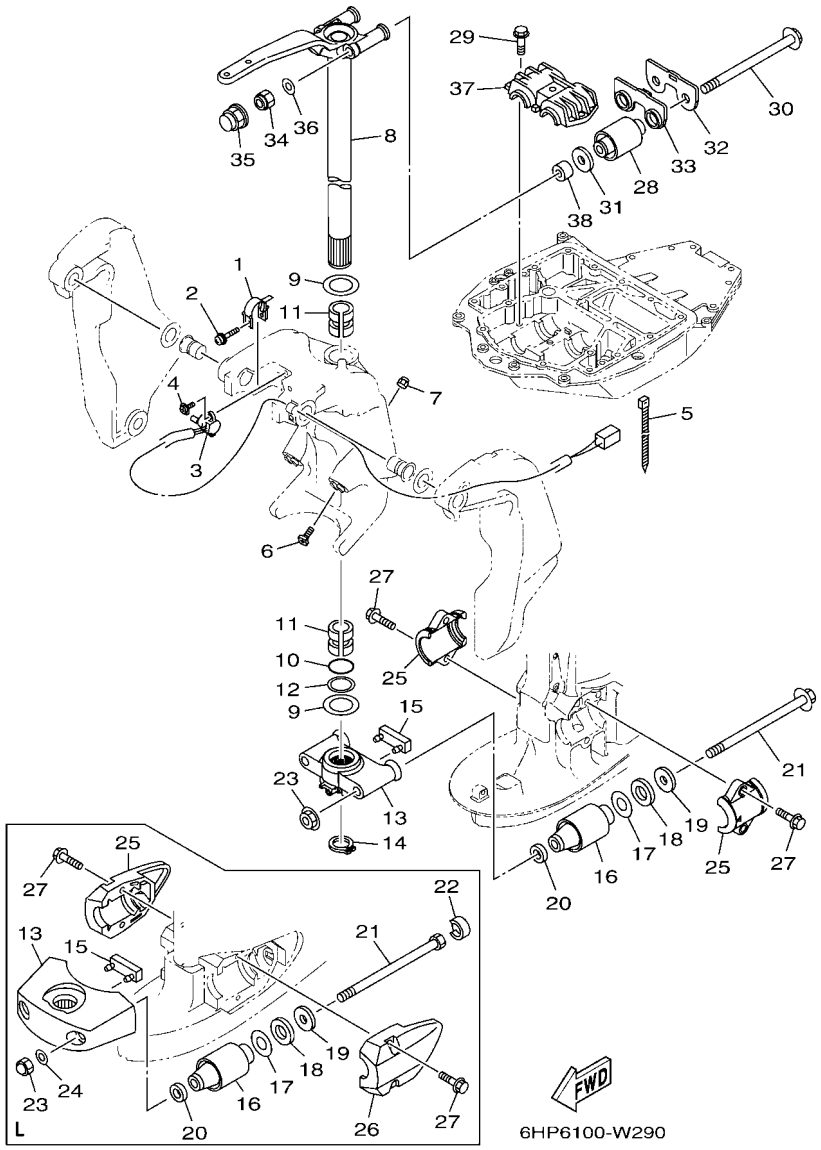


## FIG. 28 BRACKET 2 — SUPPORT 2

| REF. NO. | PART NO. N° PIECES | DESCRIPTION DESCRIPTION | 6DAB | 6DBB | | | | REMARKS REMARQUES |
|---|---|---|---|---|---|---|---|---|
| 1 | 64E–43139–11 | CAM, TRIM SENDER<br>VILEBREQUIN TRUM | 1 | 1 | | | | |
| 2 | 90159–05059 | SCREW, WITH WASHER<br>VIS, AVEC RONDELLE | 1 | 1 | | | | |
| 3 | 67H–83672–02 | TRIM SENDER<br>INCLINER RACCORD | 1 | 1 | | | | |
| 4 | 97985–06216 | SCREW, WITH WASHER<br>VIS, AVEC RONDELLE | 2 | 2 | | | | |
| 5 | 90465–11M10 | CLAMP<br>BRIDE | 3 | 3 | | | | |
| 6 | 61A–43376–00 | BOLT, THRUST RECEIVER<br>BOULON | 2 | 2 | | | | |
| 7 | 95780–10300 | NUT, FLANGE<br>ECROU | 2 | 2 | | | | |
| 8 | 6DA–42510–00–8D | STEERING BRACKET ASSY<br>DIRECTION SUPPORT (ENS.) | 1 | 1 | | | | X(25.3")<br>X(25.3") |
| | 6DA–42510–10–8D | STEERING BRACKET ASSY<br>DIRECTION SUPPORT (ENS.) | 1 | | | | | L(20.3")<br>L(20.3") |
| 9 | 90201–38M60 | WASHER, PLATE<br>RONDELLE, PLATE | 2 | 2 | | | | |
| 10 | 93210–37MH7 | O-RING<br>JOINT TORIQUE | 1 | 1 | | | | |
| 11 | 90386–38M32 | BUSH<br>DOUILLE | 2 | 2 | | | | |
| 12 | 90202–40M47 | WASHER, PLATE<br>RONDELLE, PLATE | 1 | 1 | | | | |
| 13 | 6DA–44551–00–CA | HOUSING, LOWER MOUNT RUBBER 1<br>BOITIER, SILENT-BLOC INFERIEUR | 1 | 1 | | | | X(25.3")<br>X(25.3") |
| | 68V–44551–00–8D | HOUSING, LOWER MOUNT RUBBER 1<br>BOITIER, SILENT-BLOC INFERIEUR | 1 | | | | | L(20.3")<br>L(20.3") |
| 14 | 93410–37M04 | CIRCLIP<br>CIRCLIP | 1 | 1 | | | | |
| 15 | 6DA–44575–00 | DAMPER, LOWER MOUNT RUBBER<br>SILENT-BLOC, INFERIEUR | 1 | 1 | | | | X(25.3")<br>X(25.3") |
| | 61A–44575–01 | DAMPER, LOWER MOUNT RUBBER<br>SILENT-BLOC, INFERIEUR | 1 | | | | | L(20.3")<br>L(20.3") |
| 16 | 63P–44555–00 | MOUNT DAMPER, LOWER SIDE<br>SILENT-BLOC, INFERIEUR LATERAL | 2 | 2 | | | | X(25.3")<br>X(25.3") |
| | 60V–44555–00 | MOUNT DAMPER, LOWER SIDE<br>SILENT-BLOC, INFERIEUR LATERAL | 2 | | | | | L(20.3")<br>L(20.3") |
| 17 | 90201–35008 | WASHER, PLATE<br>RONDELLE, PLATE | 2 | 2 | | | | |
| 18 | 90202–32M19 | WASHER, PLATE<br>RONDELLE, PLATE | 2 | 2 | | | | |
| 19 | 90201–16M55 | WASHER, PLATE<br>RONDELLE, PLATE | 2 | 2 | | | | |
| 20 | 90201–15M58 | WASHER, PLATE<br>RONDELLE, PLATE | 2 | 2 | | | | |
| 21 | 90105–14012 | BOLT, FLANGE<br>BOULON, A COLLERETTE | 2 | 2 | | | | X(25.3")<br>X(25.3") |
| | 90101–14005 | BOLT<br>BOULON | 2 | | | | | L(20.3")<br>L(20.3") |
| 22 | 69J–44533–00 | DAMPER, UPPER MOUNT RUBBER<br>COUVERCLE, SUSPENSION INFERIEU | 2 | | | | | L(20.3")<br>L(20.3") |

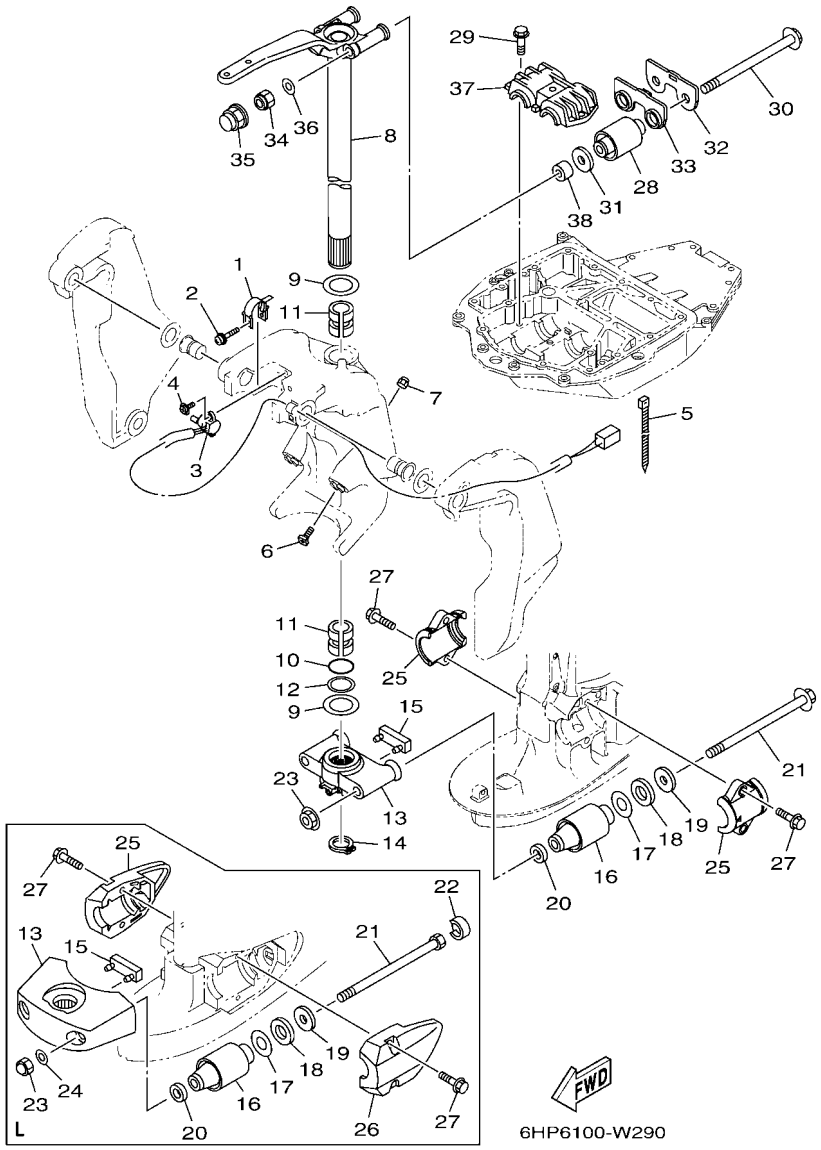


## FIG. 28 BRACKET 2 — SUPPORT 2

| REF. NO. | PART NO. N° PIECES | DESCRIPTION DESCRIPTION | 6DAB | 6DBB | | | | REMARKS REMARQUES |
|---|---|---|---|---|---|---|---|---|
| 23 | 95604–14200 | NUT, SELF-LOCKING<br>ECROU, AUTO-BLOCANT | 2 | 2 | | | | X(25.3")<br>X(25.3") |
| | 90176–14002 | NUT, CAP<br>ECROU, BOUCHON | 2 | | | | | L(20.3")<br>L(20.3") |
| 24 | 92995–14600 | WASHER<br>RONDELLE | 2 | | | | | L(20.3")<br>L(20.3") |
| 25 | 6DA–44552–00–CA | HOUSING, LOWER MOUNT RUBBER 2<br>BOITIER, SILENT-BLOC INFERIEUR | 2 | 2 | | | | X(25.3")<br>X(25.3") |
| | 63P–44553–00–8D | COVER, LOWER MOUNT<br>COUVERCLE, SUSPENSION INFERIEU | 1 | | | | | L(20.3")<br>L(20.3") |
| 26 | 63P–44556–00–8D | COVER, LOWER MOUNT 2<br>COUVERCLE,SUSPENSION INFERIEU | 1 | | | | | L(20.3")<br>L(20.3") |
| 27 | 90119–10058 | BOLT, WITH WASHER<br>BOULON, AVEC RONDELLE | 4 | 4 | | | | |
| 28 | 6DA–44514–00 | MOUNT DAMPER, UPPER SIDE<br>SILENT-BLOC, SUPERIEUR LATERAL | 2 | 2 | | | | |
| 29 | 90119–10024 | BOLT, WITH WASHER<br>BOULON, AVEC RONDELLE | 3 | 3 | | | | |
| 30 | 90105–14009 | BOLT, FLANGE<br>BOULON, A COLLERETTE | 2 | 2 | | | | |
| 31 | 90201–16M01 | WASHER, PLATE<br>RONDELLE, PLATE | 2 | 2 | | | | |
| 32 | 6DA–44526–00 | PLATE<br>PLAQUE | 1 | 1 | | | | |
| 33 | 6DA–44532–00 | STOPPER, UPPER MOUNT<br>PLAQUETTE | 1 | 1 | | | | |
| 34 | 90185–14M00 | NUT, SELF-LOCKING<br>ECROU,AUTO-BLOQUANT | 2 | 2 | | | | |
| 35 | 6DA–44194–00 | CAP<br>CAPUCHON | 2 | 2 | | | | |
| 36 | 92995–14600 | WASHER<br>RONDELLE | 2 | 2 | | | | |
| 37 | 63P–44511–00 | COVER, UPPER MOUNT<br>COUVERCLE, SUSPENSION SUPERIEU | 1 | 1 | | | | |
| 38 | 90387–14004 | COLLAR<br>COLLERETTE | 2 | 2 | | | | |

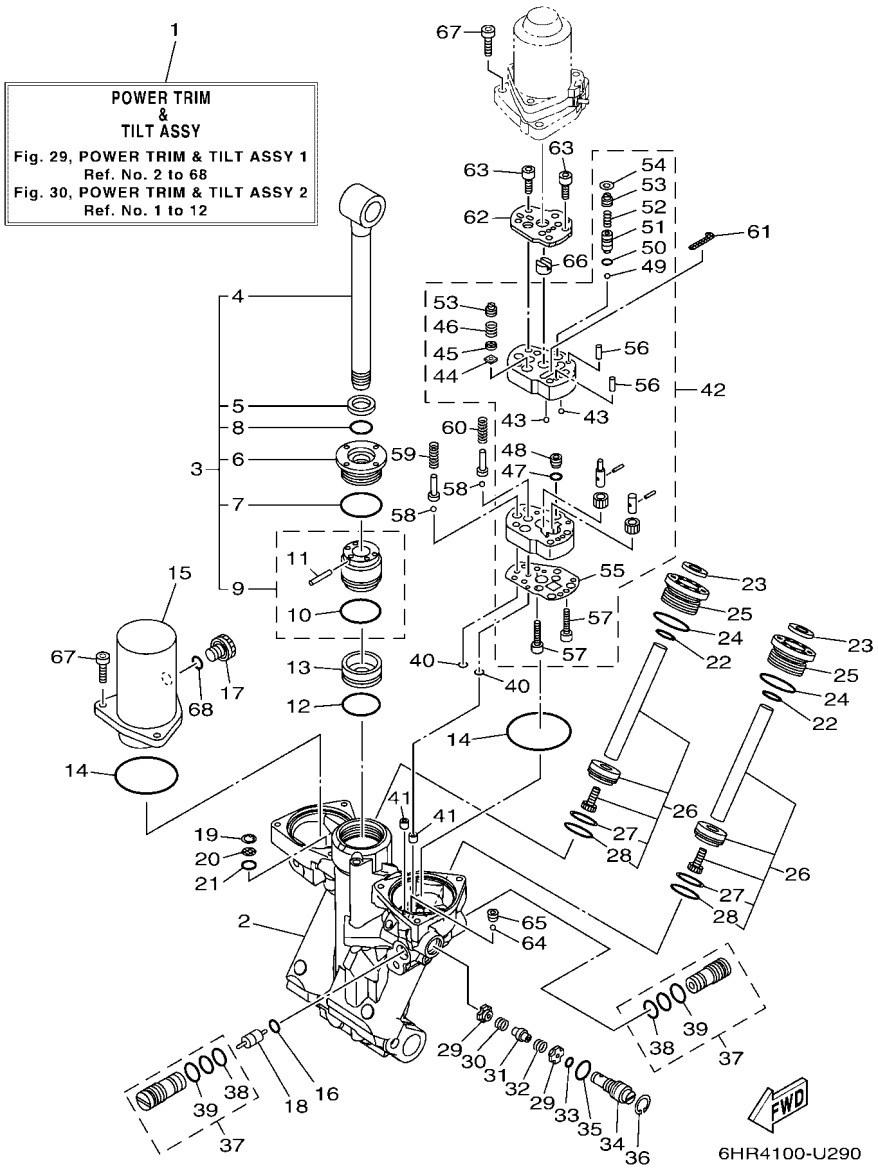


## FIG. 29 POWER TRIM & TILT ASSY 1 — PUISSANCE PARER ET INCLINER 1

| REF. NO. | PART NO. N° PIECES | DESCRIPTION DESCRIPTION | 6DAB | 6DBB | | | | REMARKS REMARQUES |
|---|---|---|---|---|---|---|---|---|
| 1 | 63P–43800–23 | POWER TRIM & TILT ASSY<br>PUISSANCE PARER ET INCLINER (E | 1 | 1 | | | | |
| 2 | 63P–4380L–23 | HOUSING, TRIM & TILT SUB ASSY<br>CARTER | 1 | 1 | | | | |
| 3 | 63P–43810–21 | TILT PISTON SUB ASSY<br>INCLINER PISTON AUXILIAIRE(ENS | 1 | 1 | | | | |
| 4 | 63P–43801–10 | .ROD<br>.TIGE | 1 | 1 | | | | |
| 5 | 93106–19001 | .OIL SEAL<br>.JOINT SPY | 1 | 1 | | | | |
| 6 | 63P–43811–20 | .SCREW, CYLINDER END<br>.VIS, CYLINDRE RACCORD | 1 | 1 | | | | |
| 7 | 63P–43861–20 | .O-RING<br>.JOINT TORIQUE | 1 | 1 | | | | |
| 8 | 63P–43863–10 | .O-RING<br>.JOINT TORIQUE | 1 | 1 | | | | |
| 9 | 63P–4380P–20 | .PISTON SUB ASSY<br>.PISTON AUXILIAIRE (ENS.) | 1 | 1 | | | | |
| 10 | 6H1–43862–00 | ..O-RING<br>..JOINT TORIQUE | 1 | 1 | | | | |
| 11 | 91609–16010 | ..PIN, SPRING<br>..AXE DE RESSORT | 1 | 1 | | | | |
| 12 | 6H1–43862–00 | O-RING<br>JOINT TORIQUE | 1 | 1 | | | | |
| 13 | 63P–43814–20 | PISTON, FREE<br>PISTON | 1 | 1 | | | | |
| 14 | 93210–68N50 | O-RING<br>JOINT TORIQUE | 2 | 2 | | | | |
| 15 | 63P–4382C–20 | BODY, RESERVOIR 2<br>CORPS 2 | 1 | 1 | | | | |
| 16 | 93210–09165 | O-RING<br>JOINT TORIQUE | 1 | 1 | | | | |
| 17 | 6CJ–43829–10 | PLUG, RESERVOIR<br>BOUCHON | 1 | 1 | | | | |
| 18 | 6H1–43841–11 | PISTON, SHUTTLE<br>PISTON | 1 | 1 | | | | |
| 19 | 63P–43876–10 | RING, SNAP<br>RESSORT | 1 | 1 | | | | |
| 20 | 63P–43816–10 | FILTER 1<br>FILTRE 1 | 1 | 1 | | | | |
| 21 | 93210–11N52 | O-RING<br>JOINT TORIQUE | 1 | 1 | | | | |
| 22 | 6D8–43863–00 | O-RING<br>JOINT TORIQUE | 2 | 2 | | | | |
| 23 | 63P–43812–20 | SEAL, DUST<br>JOINT | 2 | 2 | | | | |
| 24 | 63P–43862–10 | O-RING<br>JOINT TORIQUE | 2 | 2 | | | | |
| 25 | 63P–43821–21 | SCREW, TRIM CYLINDER END<br>VIS | 2 | 2 | | | | |
| 26 | 63P–43820–20 | TRIM PISTON SUB ASSY<br>PARER PISTON AUXILIAIRE (ENS.) | 2 | 2 | | | | |
| 27 | 62X–43871–00 | .RING, BACK UP<br>.SEGMENT | 1 | 1 | | | | |

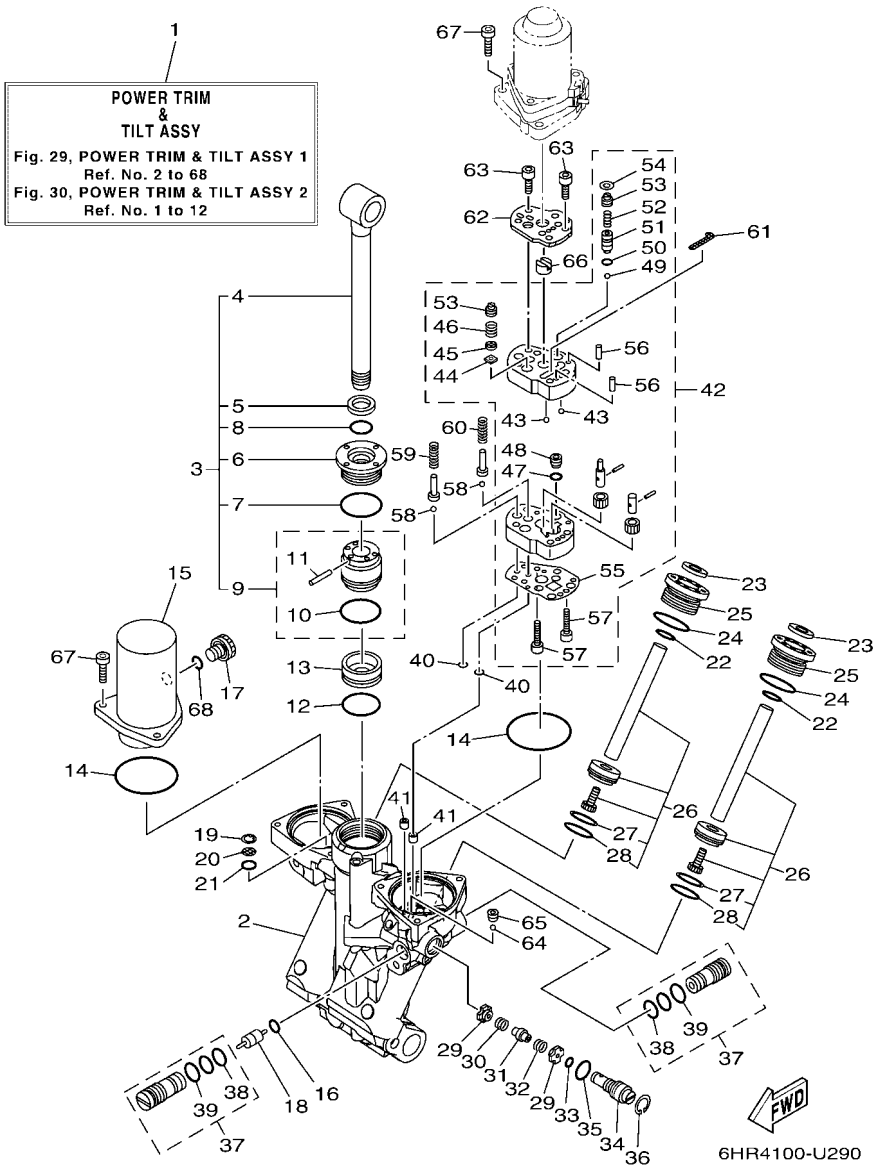


## FIG. 29 POWER TRIM & TILT ASSY 1 — PUISSANCE PARER ET INCLINER 1

| REF. NO. | PART NO. N° PIECES | DESCRIPTION DESCRIPTION | 6DAB | 6DBB | | | | REMARKS REMARQUES |
|---|---|---|---|---|---|---|---|---|
| 28 | 93210–29375 | .O-RING<br>.JOINT TORIQUE | 1 | 1 | | | | |
| 29 | 63P–43847–10 | SEAT, MANUAL VALVE<br>SIEGE | 2 | 2 | | | | |
| 30 | 63P–43854–10 | SPRING, MANUAL RELEASE<br>RESSORT | 1 | 1 | | | | |
| 31 | 63P–4382A–10 | ADAPTOR 1<br>ADAPTEUR 1 | 1 | 1 | | | | |
| 32 | 63P–4384H–10 | SPRING<br>RESSORT | 1 | 1 | | | | |
| 33 | 69J–4389J–00 | O-RING<br>JOINT TORIQUE | 1 | 1 | | | | |
| 34 | 63P–43845–20 | SCREW, MANUAL RELEASE<br>VIS | 1 | 1 | | | | |
| 35 | 93210–12327 | O-RING<br>JOINT TORIQUE | 1 | 1 | | | | |
| 36 | 61A–43876–01 | RING, SNAP<br>RESSORT | 1 | 1 | | | | |
| 37 | 63P–43802–21 | VALVE SUB ASSY<br>CLAPET AUXILIAIRE (ENS.) | 2 | 2 | | | | |
| 38 | 93210–12N52 | .O-RING<br>.JOINT TORIQUE | 1 | 1 | | | | |
| 39 | 6H1–43866–01 | .O-RING<br>.JOINT TORIQUE | 1 | 1 | | | | |
| 40 | 93210–064A5 | O-RING<br>JOINT TORIQUE | 2 | 2 | | | | |
| 41 | 63P–4381C–20 | FILTER 3<br>FILTRE 3 | 2 | 2 | | | | |
| 42 | 63P–43830–20 | GEAR PUMP ASSY<br>POMPE A PIGNON (ENS.) | 1 | 1 | | | | |
| 43 | 93503–16003 | .BALL<br>.BILLES | 2 | 2 | | | | |
| 44 | 6H1–4384G–11 | .SEAL, RELIEF VALVE<br>.JOINT | 1 | 1 | | | | |
| 45 | 6H1–43844–10 | .PIN, VALVE SUPPORT<br>.GOUPILLE | 1 | 1 | | | | |
| 46 | 6H1–43856–10 | .SPRING, DOWN RELIEF<br>.RESSORT | 1 | 1 | | | | |
| 47 | 93210–07N51 | .O-RING<br>.JOINT TORIQUE | 1 | 1 | | | | |
| 48 | 63P–43851–20 | .SEAT, RELIEF VALVE<br>.SIEGE | 1 | 1 | | | | |
| 49 | 93501–08001 | .BALL<br>.BILLE | 1 | 1 | | | | |
| 50 | 93210–064A5 | .O-RING<br>.JOINT TORIQUE | 1 | 1 | | | | |
| 51 | 63P–43844–20 | .PIN, VALVE SUPPORT<br>.GOUPILLE | 1 | 1 | | | | |
| 52 | 69J–43855–00 | .SPRING, UP RELIEF<br>.RESSORT | 1 | 1 | | | | |
| 53 | 63P–43843–10 | .SCREW, VALVE LOCK<br>.VIS | 2 | 2 | | | | |
| 54 | 63P–43338–10 | .WASHER, WAVE<br>.RONDELLE, ONDULEE | 1 | 1 | | | | |

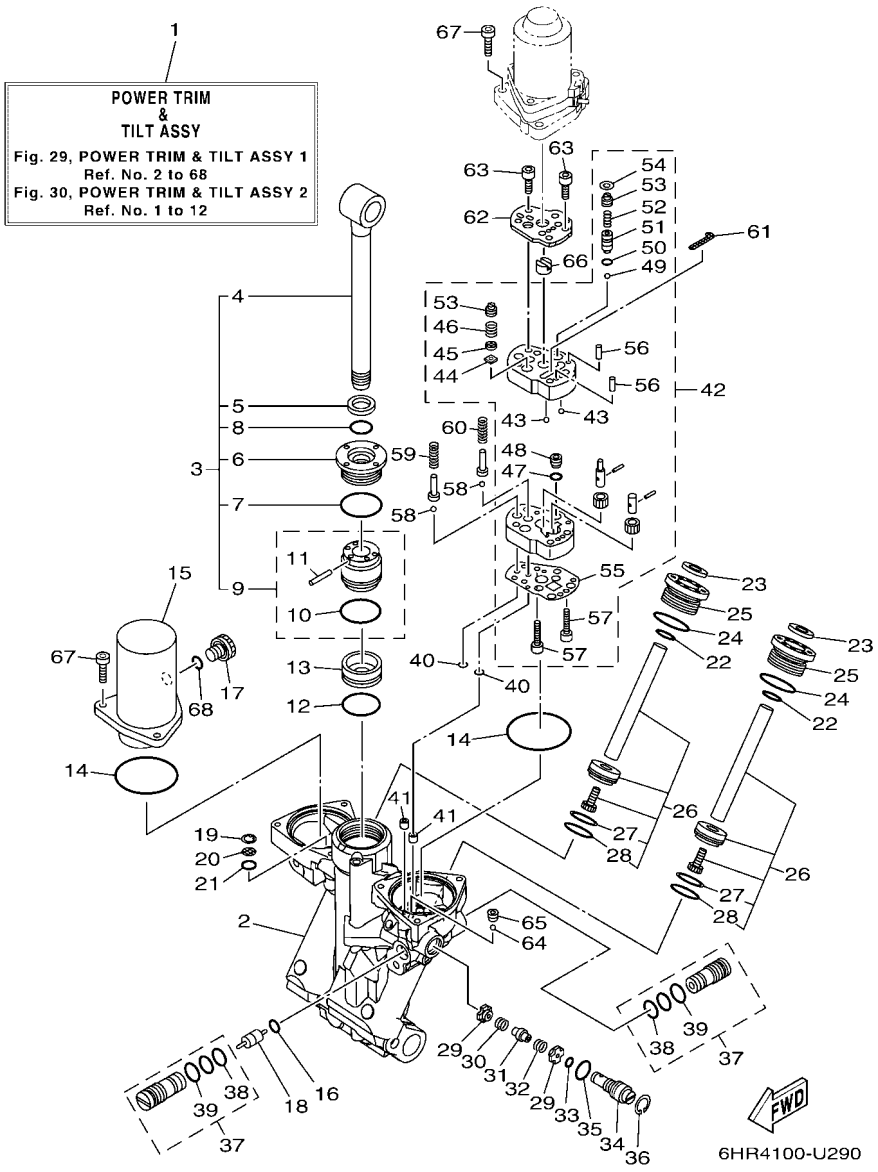


## FIG. 29 POWER TRIM & TILT ASSY 1 — PUISSANCE PARER ET INCLINER 1

| REF. NO. | PART NO. N° PIECES | DESCRIPTION DESCRIPTION | 6DAB | 6DBB | | | | REMARKS REMARQUES |
|---|---|---|---|---|---|---|---|---|
| 55 | 63P–4384G–20 | .SEAL, RELIEF VALVE<br>.JOINT | 1 | 1 | | | | |
| 56 | 93604–10011 | .PIN, DOWEL<br>.CLAVETTE | 2 | 2 | | | | |
| 57 | 91312–04020 | .BOLT, HEXAGON SOCKET HEAD<br>.BOULON, TETE HEXAGONALE CREUSE | 2 | 2 | | | | |
| 58 | 93501–08001 | BALL<br>BILLE | 2 | 2 | | | | |
| 59 | 63P–43857–10 | SPRING, ABSORBER VALVE<br>RESSORT | 1 | 1 | | | | |
| 60 | 63P–4385H–10 | SPRING, SEAL<br>RESSORT | 1 | 1 | | | | |
| 61 | 6CJ–43816–00 | FILTER 1<br>FILTRE 1 | 1 | 1 | | | | |
| 62 | 63P–4381J–10 | PLATE<br>PLAQUE | 1 | 1 | | | | |
| 63 | 91312–05035 | BOLT, HEXAGON SOCKET HEAD<br>BOULON, TETE HEXAGONALE CREUSE | 4 | 4 | | | | |
| 64 | 93505–32038 | BALL<br>BILLE | 1 | 1 | | | | |
| 65 | 61A–43878–00 | BOLT, SOCKET<br>BOULON | 1 | 1 | | | | |
| 66 | 69J–43831–00 | CONNECTOR, SHAFT<br>RACCORD | 1 | 1 | | | | |
| 67 | 91380–06025 | BOLT<br>BOULON | 6 | 6 | | | | |
| 68 | 6CJ–43861–10 | O-RING<br>JOINT TORIQUE | 1 | 1 | | | | |

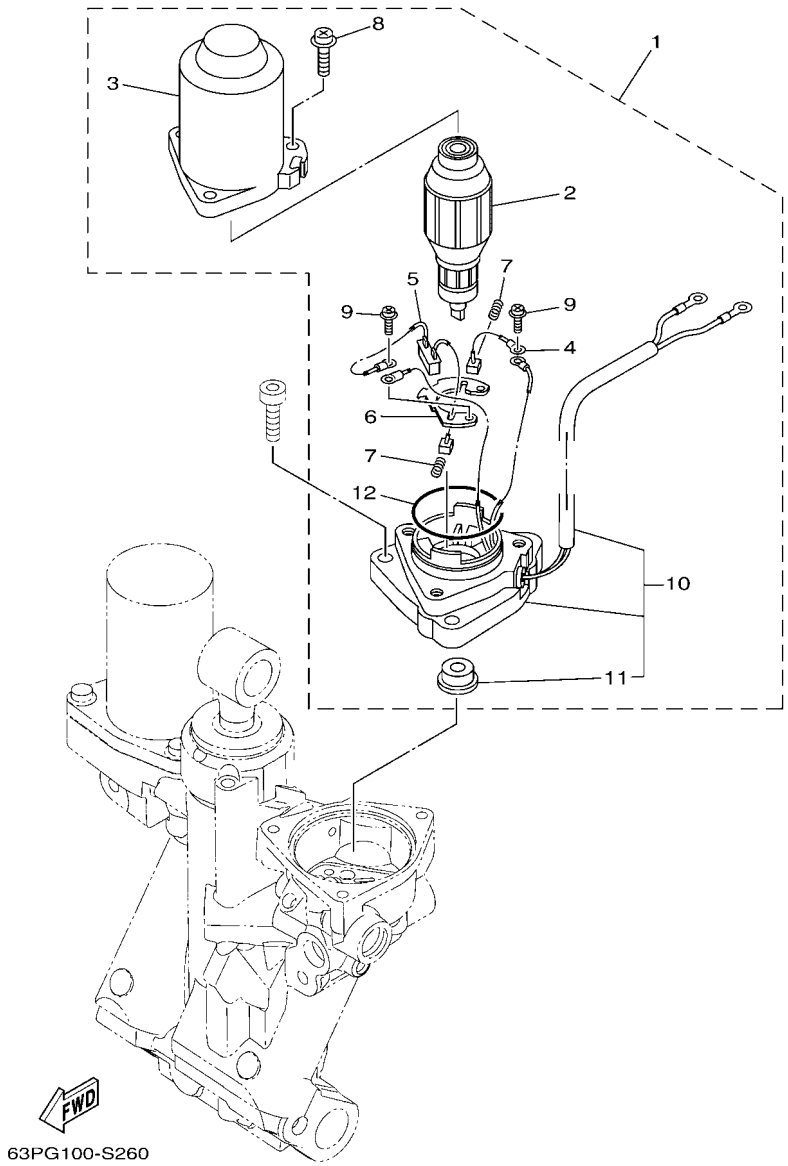


## FIG. 30 POWER TRIM & TILT ASSY 2 — PUISSANCE PARER ET INCLINER 2

| REF. NO. | PART NO. N° PIECES | DESCRIPTION DESCRIPTION | 6DAB | 6DBB | | | | REMARKS REMARQUES |
|---|---|---|---|---|---|---|---|---|
| 1 | 6KW–43880–01 | MOTOR ASSY<br>MOTEUR (ENS.) | 1 | 1 | | | | |
| 2 | 6EK–43805–01 | .ARMATURE ASSY<br>.INDUIT (ENS.) | 1 | 1 | | | | |
| 3 | 6EK–43804–11 | .STATOR ASSY<br>.STATOR (ENS.) | 1 | 1 | | | | |
| 4 | 6EK–43892–00 | .BRUSH 2<br>.BALAI 2 | 1 | 1 | | | | |
| 5 | 63P–82181–20 | .CIRCUIT BREAKER COMP.<br>.RUPTEUR COMPLET | 1 | 1 | | | | |
| 6 | 6EK–4380F–00 | .PLATE, BRUSH HOLDER<br>.PLAQUE | 1 | 1 | | | | |
| 7 | 62X–4386K–00 | .SPRING, BRUSH<br>.RESSORT, BALAI | 2 | 2 | | | | |
| 8 | 63P–43879–10 | .SCREW, WITH WASHER<br>.VIS, AVEC RONDELLE | 3 | 3 | | | | |
| 9 | 97602–04316 | .SCREW, PAN HEAD WITH WASHER<br>.VIS, AVEC RONDELLE | 2 | 2 | | | | |
| 10 | 63P–43881–22 | .FRAME, END<br>.BATI | 1 | 1 | | | | |
| 11 | 6EK–43882–00 | ..OIL SEAL<br>..JOINT SPI | 1 | 1 | | | | |
| 12 | 6EK–43862–01 | .O-RING<br>.JOINT TORIQUE | 1 | 1 | | | | |

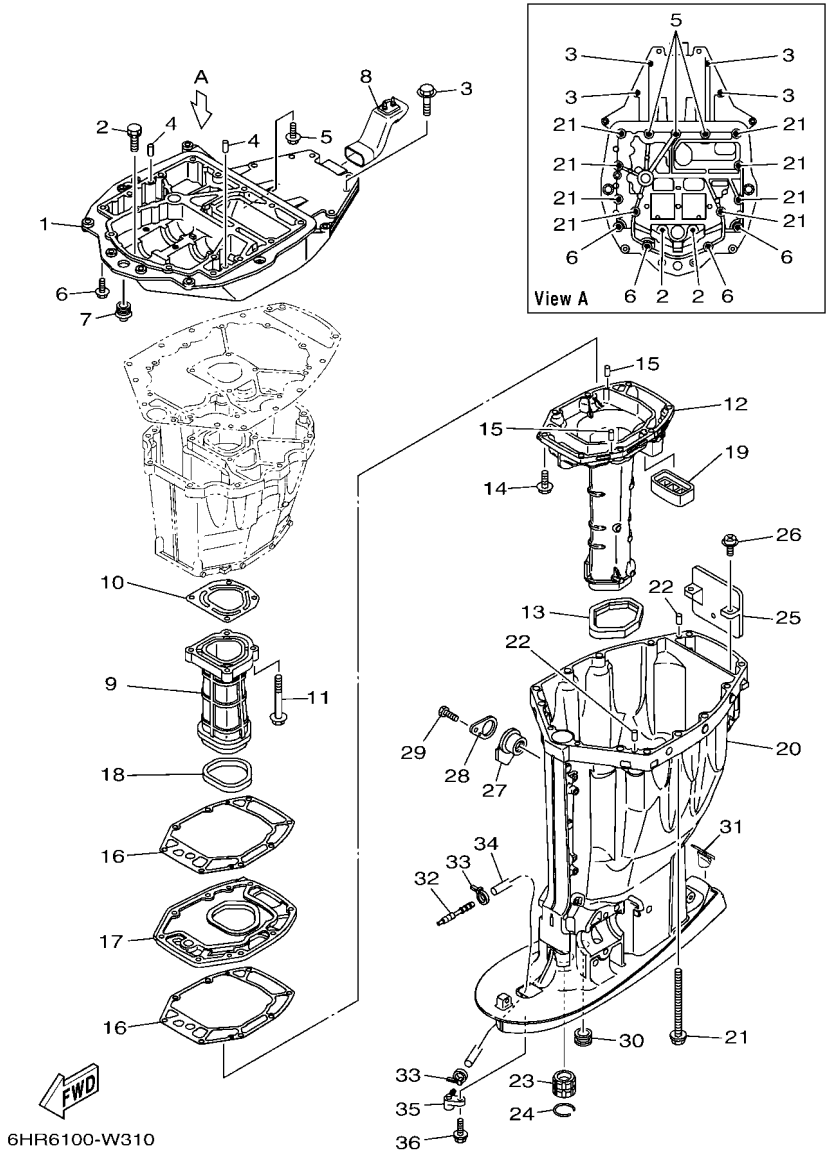


## FIG. 31 UPPER CASING — FOURREAU

| REF. NO. | PART NO. N° PIECES | DESCRIPTION DESCRIPTION | 6DAB | 6DBB | | | | REMARKS REMARQUES |
|---|---|---|---|---|---|---|---|---|
| 1 | 63P–41137–06 | GUIDE, EXHAUST<br>COLLECTEUR D'ECHAPPEMENT | 1 | 1 | | | | |
| 2 | 90119–08182 | BOLT, WITH WASHER<br>BOULON, AVEC RONDELLE | 2 | 2 | | | | |
| 3 | 97E75–10545 | BOLT, HEXAGON W/W DEEP RECESS<br>VIS HEXAGONAL AVC RONDELLE | 4 | 4 | | | | |
| 4 | 93608–16M16 | PIN, DOWEL<br>AXE | 2 | 2 | | | | |
| 5 | 90119–08189 | BOLT, WITH WASHER<br>BOULON, AVEC RONDELLE | 3 | 3 | | | | |
| 6 | 97E75–10535 | BOLT, HEXAGON W/W DEEP RECESS<br>VIS HEXAGONAL AVC RONDELLE | 4 | 4 | | | | |
| 7 | 6E5–42724–01 | GROMMET<br>PASSE-FIL | 1 | 1 | | | | |
| 8 | 6DA–42769–01 | SEAL, RUBBER<br>BOURRELET, CAOUTCHOUC | 1 | 1 | | | | |
| 9 | 63P–41131–02 | MANIFOLD, EXT. 1<br>PIPE D'ECHAPPEMENT | 1 | 1 | | | | |
| 10 | 63P–41133–A0 | GASKET, EXHAUST MANIFOLD 1<br>JOINT, PIPE D'ECHAPPEMENT | 1 | 1 | | | | |
| 11 | 97E75–08560 | BOLT, HEXAGON W/W DEEP RECESS<br>VIS HEXAGONAL AVC RONDELLE | 4 | 4 | | | | |
| 12 | 6DA–14711–01 | MUFFLER 1<br>POT D'ECHAPPEMENT 1 | 1 | 1 | | | | X(25.3")<br>X(25.3") |
| | 6DA–14711–11 | MUFFLER 1<br>POT D'ECHAPPEMENT 1 | 1 | | | | | L(20.3")<br>L(20.3") |
| 13 | 69J–45123–00 | GASKET, MUFFLER<br>JOINT, POT DE DETENTE | 1 | 1 | | | | |
| 14 | 97E75–08535 | BOLT, HEXAGON W/W DEEP RECESS<br>VIS HEXAGONAL AVC RONDELLE | 8 | 8 | | | | |
| 15 | 93606–19M23 | PIN, DOWEL<br>GOUPILLE | 2 | 2 | | | | |
| 16 | 63P–41134–A1 | GASKET, EXHAUST MANIFOLD<br>JOINT, PIPE D'ECHAPPEMENT | 2 | 2 | | | | |
| 17 | 63P–45181–02 | PLATE<br>PLAQUETTE | 1 | 1 | | | | |
| 18 | 63P–41138–00 | SEAL, EXT. 1<br>JOINT DE GROUPE 1 | 1 | 1 | | | | |
| 19 | 69J–45127–01 | SEAL<br>JOINT | 1 | 1 | | | | |
| 20 | 6DA–45111–01–8D | CASING, UPPER<br>FOURREAU | 1 | 1 | | | | X(25.3")<br>X(25.3") |
| | 6DA–45111–10–8D | CASING, UPPER<br>FOURREAU | 1 | | | | | L(20.3")<br>L(20.3") |
| 21 | 90119–10007 | BOLT, WITH WASHER<br>BOULON, AVEC RONDELLE | 8 | 8 | | | | |
| 22 | 93608–16M16 | PIN, DOWEL<br>AXE | 2 | 2 | | | | |
| 23 | 6E5–45318–00 | BUSHING, DRIVE SHAFT<br>DOUILLE, ARBRE MOTEUR | 1 | 1 | | | | |
| 24 | 93420–36M01 | CIRCLIP<br>CIRCLIP, TYPE S | 1 | 1 | | | | |
| 25 | 69J–14624–01 | COVER, EXHAUST<br>CACHE D'ECHAPPEMENT | 1 | 1 | | | | |

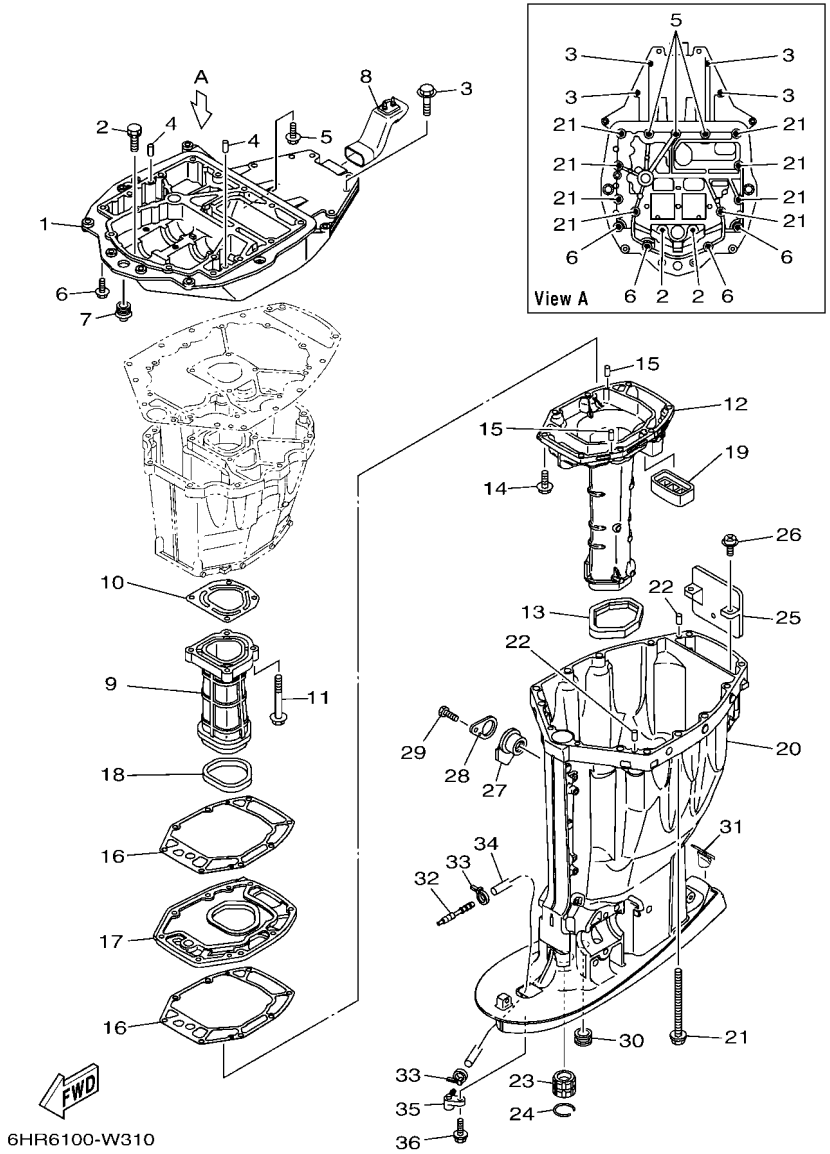


## FIG. 31 UPPER CASING FOURREAU

| REF. NO. | PART NO. N° PIECES | DESCRIPTION DESCRIPTION | 6DAB | 6DBB | | | | REMARKS REMARQUES |
|---|---|---|---|---|---|---|---|---|
| 26 | 97980–06216 | SCREW, WITH WASHER<br>VIS, AVEC RONDELLE | 2 | 2 | | | | |
| 27 | 6BB–15316–01 | DAMPER 1<br>AMORTISSEUR 1 | 1 | 1 | | | | X(25.3")<br>X(25.3") |
| 28 | 6BB–45152–01 | COVER, UPPER CASING 2<br>CAPUCHON FOURREAU | 1 | 1 | | | | X(25.3")<br>X(25.3") |
| 29 | 97D95–06012 | BOLT, HEXAGON DEEP RECESS<br>VIS HEXAGONAL | 1 | 1 | | | | X(25.3")<br>X(25.3") |
| 30 | 6E5–44366–01 | DAMPER, WATER SEAL 2<br>JOINT, TUBE D'EAU 2 | 1 | 1 | | | | |
| 31 | 6DA–45155–01 | CAP<br>CAPUCHON | 1 | 1 | | | | X(25.3")<br>X(25.3") |
| | 6C5–45155–01 | CAP<br>CAPUCHON | 1 | | | | | L(20.3")<br>L(20.3") |
| 32 | 6E5–83558–00 | END, NIPPLE<br>RACCORD DE NIPPLE | 1 | 1 | | | | |
| 33 | 90465–11M10 | CLAMP<br>BRIDE | 2 | 2 | | | | |
| 34 | 90445–07018 | HOSE (L1400)<br>DURITE (L1400) | 1 | 1 | | | | |
| 35 | 63P–45379–00 | NIPPLE, HOSE<br>RACCORD D'ESSENCE | 1 | 1 | | | | |
| 36 | 90119–06287 | BOLT, WITH WASHER<br>BOULON, AVEC RONDELLE | 1 | 1 | | | | |

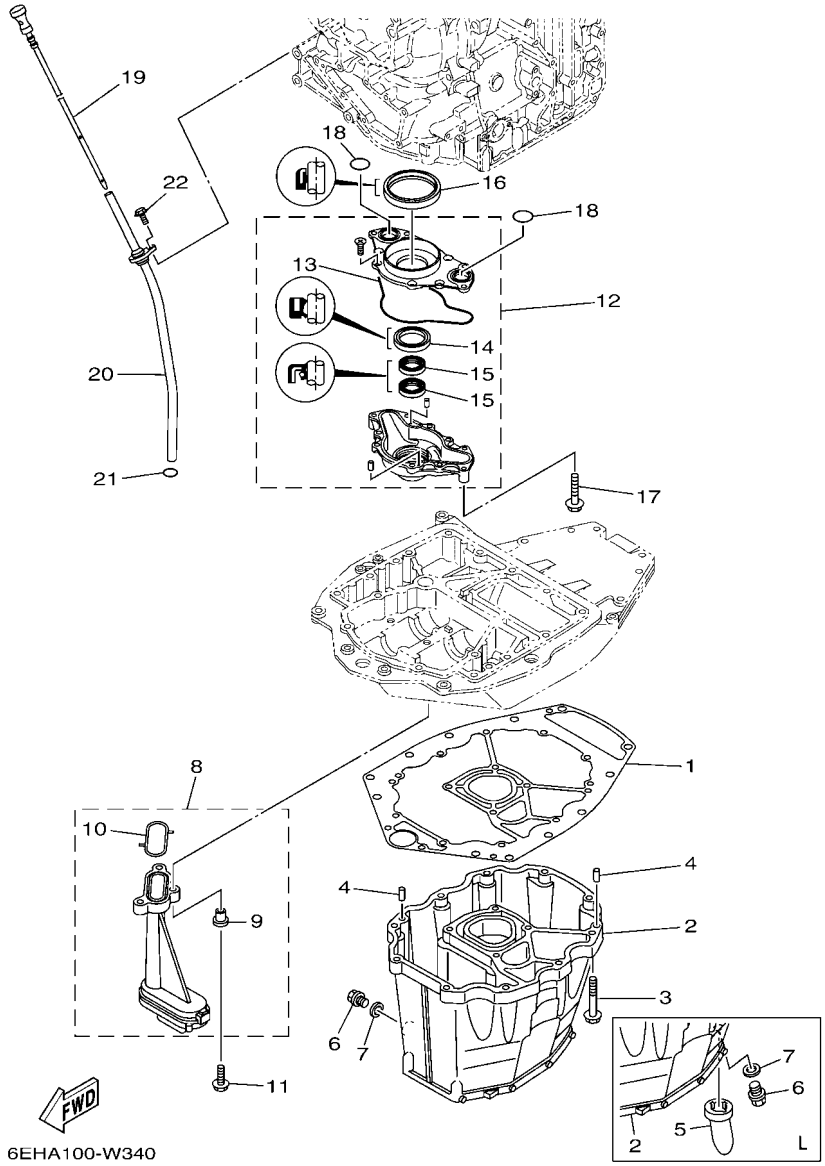


## FIG. 32 OIL PAN — VENTILATEUR D'HUILE

| REF. NO. | PART NO. N° PIECES | DESCRIPTION DESCRIPTION | 6DAB | 6DBB | | | | REMARKS REMARQUES |
|---|---|---|---|---|---|---|---|---|
| 1 | 63P–15312–02 | GASKET, OIL PAN<br>JOINT DE VENTILATEUR D'HUILE | 1 | 1 | | | | |
| 2 | 6DA–15311–01 | OIL PAN<br>VENTILATEUR D'HUILE | 1 | 1 | | | | X(25.3")<br>X(25.3") |
| | 63P–15311–03 | OIL PAN<br>VENTILATEUR D'HUILE | 1 | | | | | L(20.3")<br>L(20.3") |
| 3 | 97E75–08535 | BOLT, HEXAGON W/W DEEP RECESS<br>VIS HEXAGONAL AVC RONDELLE | 10 | 10 | | | | |
| 4 | 93608–16M16 | PIN, DOWEL<br>AXE | 2 | 2 | | | | |
| 5 | 63P–15316–01 | DAMPER 1<br>AMORTISSEUR 1 | 1 | | | | | L(20.3")<br>L(20.3") |
| 6 | 90340–14M06 | PLUG, STRAIGHT SCREW<br>PLOT, FILETE DROIT | 1 | 1 | | | | |
| 7 | 90430–14M09 | GASKET<br>JOINT | 1 | 1 | | | | |
| 8 | 63P–13411–00 | STRAINER, OIL<br>FILTRE, HUILE | 1 | 1 | | | | |
| 9 | 90387–06263 | .COLLAR<br>.COLLERETTE | 3 | 3 | | | | |
| 10 | 63P–13415–00 | .SEAL, OIL STRAINER<br>.JOINT, FILTRE A HUILE | 1 | 1 | | | | |
| 11 | 95812–06025 | BOLT, FLANGE<br>BOULON | 3 | 3 | | | | |
| 12 | 6DA–13300–00 | OIL PUMP ASSY<br>POMPE A HUILE COMPLETE | 1 | 1 | | | | |
| 13 | 6DA–13329–00 | .GASKET, PUMP COVER<br>.JOINT, COUVERCLE DE POMPE | 1 | 1 | | | | |
| 14 | 6AW–13119–00 | .OIL SEAL<br>.JOINT SPY | 1 | 1 | | | | |
| 15 | 69J–13631–00 | .OIL SEAL<br>.JOINT SPY | 2 | 2 | | | | |
| 16 | 6CB–11355–00 | SEAL, CYLINDER 1<br>JOINT, SPY CYLINDRE | 1 | 1 | | | | |
| 17 | 97E75–06540 | BOLT, HEXAGON W/W DEEP RECESS<br>VIS HEXAGONAL AVC RONDELLE | 4 | 4 | | | | |
| 18 | 93210–25552 | O-RING<br>JOINT TORIQUE | 2 | 2 | | | | |
| 19 | 6DA–15362–00 | PLUG, OIL LEVEL<br>PLOT, NIVEAU D'HUILE | 1 | 1 | | | | |
| 20 | 6DA–15377–00 | GUIDE, INLET<br>GUIDE D'ADMISSION | 1 | 1 | | | | |
| 21 | 93210–19MJ3 | O-RING<br>JOINT TORIQUE | 1 | 1 | | | | |
| 22 | 95D95–06016 | BOLT, FLANGE DEEP RECESS<br>BOULON FIXATION | 1 | 1 | | | | |

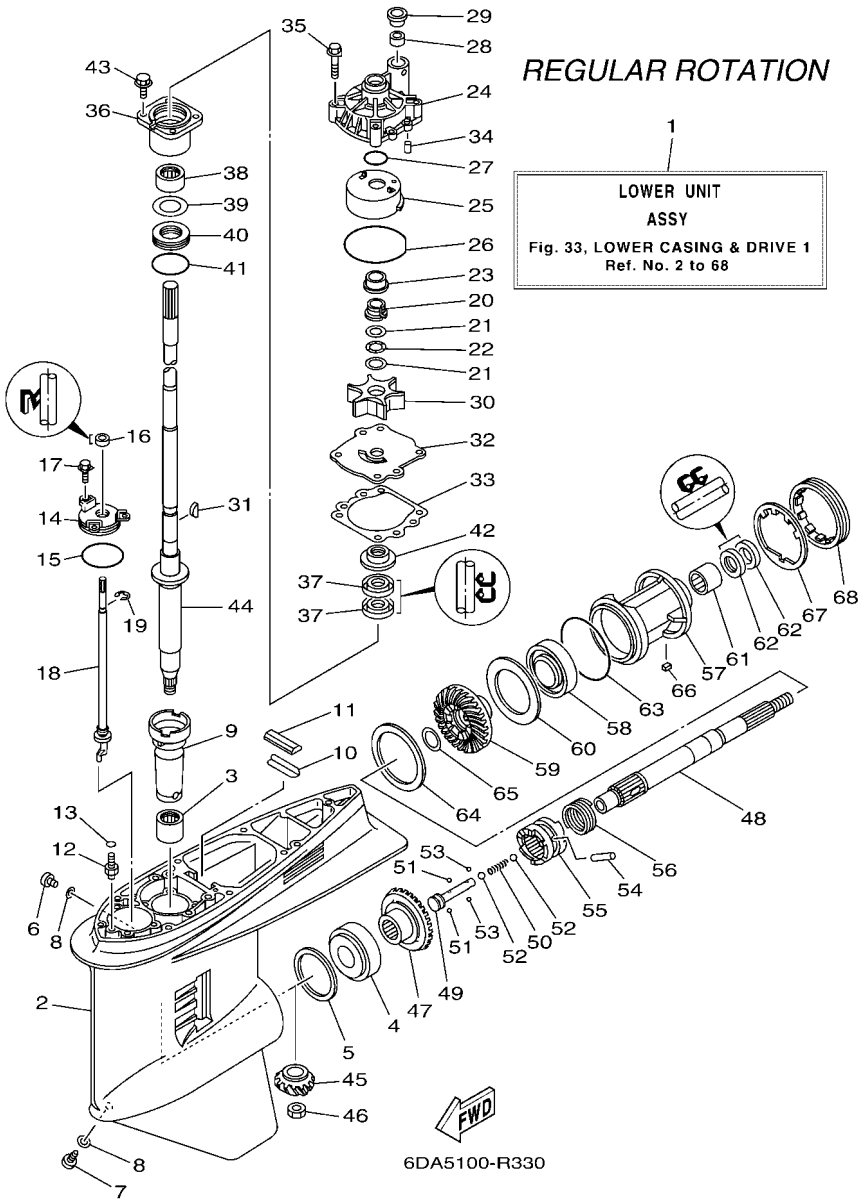


## FIG. 33 LOWER CASING & DRIVE 1 — BOITIER D'HELICE TRANSMISSION1

| REF. NO. | PART NO. N° PIECES | DESCRIPTION DESCRIPTION | 6DAB | 6DBB | | | | REMARKS REMARQUES |
|---|---|---|---|---|---|---|---|---|
| 1 | 6DA–45300–14–8D | LOWER UNIT ASSY<br>UNITE INFERIEURE (ENS.) | 1 | | | | | X(25.3"),RH<br>X(25.3"),RH |
| | 6DA–45300–03–8D | LOWER UNIT ASSY<br>UNITE INFERIEURE (ENS.) | 1 | | | | | L(20.3"),RH<br>L(20.3"),RH |
| 2 | 6J9–45301–07–8D | CASING, LOWER<br>BEQUILLE | 1 | | | | | |
| 3 | 93311–928U5 | BEARING<br>ROULEMENT | 1 | | | | | |
| 4 | 93332–000V3 | BEARING<br>ROULEMENT | 1 | | | | | |
| 5 | 6G5–45567–01 | SHIM (T:0.10MM)<br>CALE (T:0.10MM) | 1 | | | | | UR<br>UR |
| | 6G5–45567–10 | SHIM (T:0.12MM)<br>CALE (T:0.12MM) | 1 | | | | | UR<br>UR |
| | 6G5–45567–20 | SHIM (T:0.15MM)<br>CALE (T:0.15MM) | 1 | | | | | UR<br>UR |
| | 6G5–45567–30 | SHIM (T:0.18MM)<br>CALE (T:0.18MM) | 1 | | | | | UR<br>UR |
| | 6G5–45567–40 | SHIM (T:0.30MM)<br>CALE (T:0.30MM) | 1 | | | | | UR<br>UR |
| | 6G5–45567–50 | SHIM (T:0.40MM)<br>CALE (T:0.40MM) | 1 | | | | | UR<br>UR |
| | 6G5–45567–60 | SHIM (T:0.50MM)<br>CALE (T:0.50MM) | 1 | | | | | UR<br>UR |
| 6 | 90340–08002 | PLUG, STRAIGHT SCREW<br>PLOT, FILETE DROIT | 1 | | | | | |
| 7 | 688–45341–10 | PLUG, DRAIN<br>BOUCHON DE VIDANGE | 1 | | | | | |
| 8 | 90430–08003 | GASKET<br>JOINT | 2 | | | | | |
| 9 | 6G5–45536–01 | SLEEVE, DRIVE SHAFT<br>MANCHON, ARBRE MOTEUR | 1 | | | | | |
| 10 | 663–45376–00 | GUIDE, SEAL DAMPER<br>BUTEE, JOINT CAOUTCHOUC | 1 | | | | | |
| 11 | 688–45375–00 | DAMPER, SEAL<br>BOURRELET, CAOUTCHOUC | 1 | | | | | |
| 12 | 63P–45378–00 | NIPPLE, HOSE<br>RACCORD, TUYAU | 1 | | | | | |
| 13 | 93210–07003 | O-RING<br>JOINT TORIQUE | 1 | | | | | |
| 14 | 6E5–45321–00 | PLATE<br>PLAQUETTE | 1 | | | | | |
| 15 | 93210–58144 | O-RING<br>JOINT TORIQUE | 1 | | | | | |
| 16 | 93106–09014 | OIL SEAL<br>JOINT SPY | 1 | | | | | |
| 17 | 90119–06286 | BOLT, WITH WASHER<br>BOULON, AVEC RONDELLE | 3 | | | | | |
| 18 | 63P–44150–01 | SHIFT CAM ASSY<br>CAME D'INVERSION | 1 | | | | | |
| 19 | 99001–08600 | CIRCLIP<br>CIRCLIP | 1 | | | | | |
| 20 | 61A–45538–00 | SPACER 1<br>ENTRETOISE | 1 | | | | | |

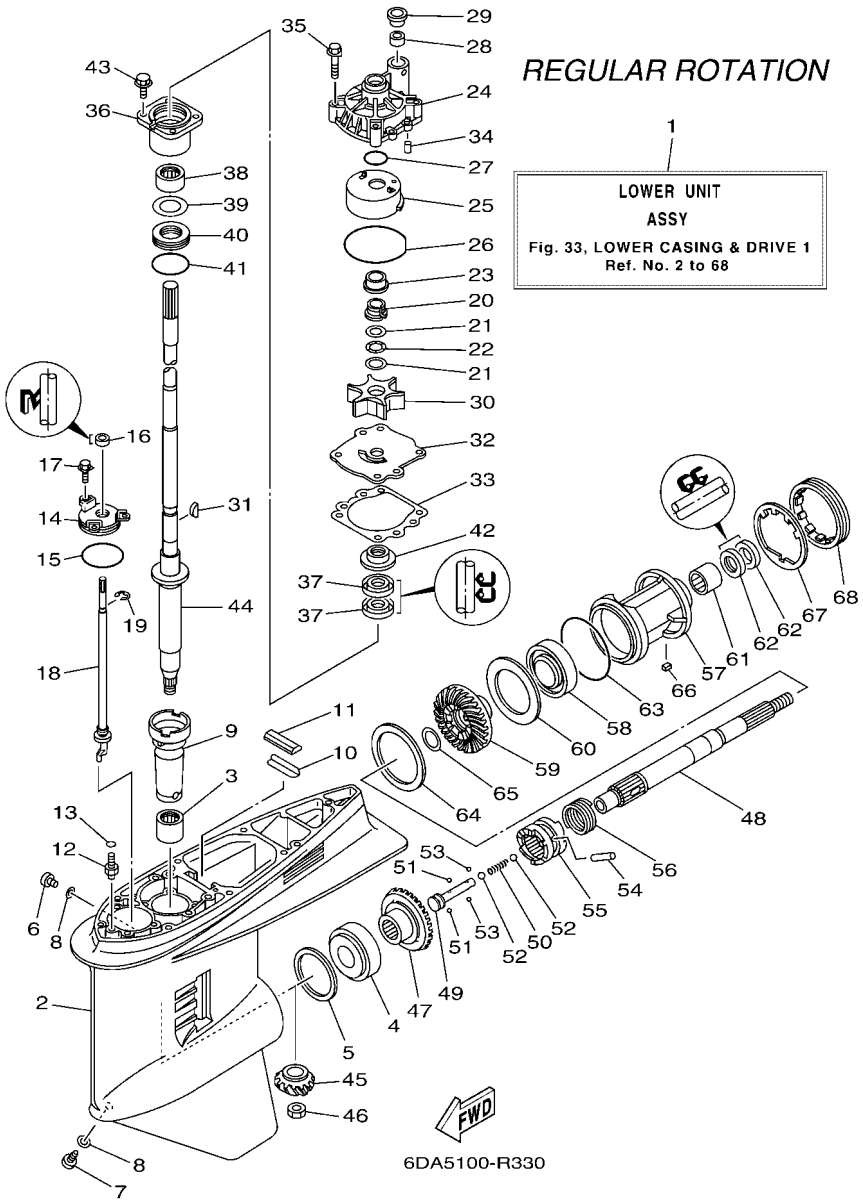


## FIG. 33 LOWER CASING & DRIVE 1 — BOITIER D'HELICE TRANSMISSION1

| REF. NO. | PART NO. N° PIECES | DESCRIPTION DESCRIPTION | 6DAB | 6DBB | | | | REMARKS REMARQUES |
|---|---|---|---|---|---|---|---|---|
| 21 | 90201–22M01 | WASHER, PLATE<br>RONDELLE, PLATE | 2 | | | | | |
| 22 | 90206–22M19 | WASHER, WAVE<br>RONDELLE, ONDULEE | 1 | | | | | |
| 23 | 61A–45527–00 | COLLAR, DRIVE SHAFT<br>ENTRETOISE | 1 | | | | | |
| 24 | 61A–44311–01 | HOUSING, WATER PUMP<br>CORPS, POMPE A EAU | 1 | | | | | |
| 25 | 61A–44322–02 | INSERT, CARTRIDGE<br>CUVETTE | 1 | | | | | |
| 26 | 93210–86M38 | O-RING<br>JOINT TORIQUE | 1 | | | | | |
| 27 | 93210–37160 | O-RING<br>JOINT TORIQUE | 1 | | | | | |
| 28 | 6E5–44365–01 | DAMPER, WATER SEAL 1<br>JOINT, TUBE D'EAU 1 | 1 | | | | | |
| 29 | 6E5–44312–00 | COVER, WATER PUMP HOUSING<br>COUVERCLE | 1 | | | | | |
| 30 | 6E5–44352–01 | IMPELLER<br>TURBINE | 1 | | | | | |
| 31 | 90280–04M05 | KEY, WOODRUFF<br>CLAVETTE, DEMI-LUNE | 1 | | | | | |
| 32 | 6G5–44323–01 | OUTER PLATE, CARTRIDGE<br>PLAQUE EXTERIEURE | 1 | | | | | |
| 33 | 6E5–44315–A0 | GASKET, WATER PUMP<br>JOINT, POMPE A EAU | 1 | | | | | |
| 34 | 93606–12019 | PIN, DOWEL<br>GOUPILLE | 2 | | | | | |
| 35 | 90119–08191 | BOLT, WITH WASHER<br>BOULON, AVEC RONDELLE | 4 | | | | | |
| 36 | 6E5–45331–00–9S | HOUSING, BEARING<br>FLASQUE, ROULEMENT | 1 | | | | | |
| 37 | 93101–28M16 | OIL SEAL<br>JOINT SPY | 2 | | | | | |
| 38 | 93317–330U2 | BEARING<br>ROULEMENT | 1 | | | | | |
| 39 | 6E5–45587–01 | SHIM (T:0.10MM)<br>CALE (T:0.10MM) | 1 | | | | | UR<br>UR |
| | 6E5–45587–10 | SHIM (T:0.12MM)<br>CALE (T:0.12MM) | 1 | | | | | UR<br>UR |
| | 6E5–45587–20 | SHIM (T:0.15MM)<br>CALE (T:0.15MM) | 1 | | | | | UR<br>UR |
| | 6E5–45587–30 | SHIM (T:0.18MM)<br>CALE (T:0.18MM) | 1 | | | | | UR<br>UR |
| | 6E5–45587–40 | SHIM (T:0.30MM)<br>CALE (T:0.30MM) | 1 | | | | | UR<br>UR |
| | 6E5–45587–50 | SHIM (T:0.40MM)<br>CALE (T:0.40MM) | 1 | | | | | UR<br>UR |
| | 6E5–45587–60 | SHIM (T:0.50MM)<br>CALE (T:0.50MM) | 1 | | | | | UR<br>UR |
| 40 | 93341–930V2 | BEARING<br>CERVEAUX DE DIRECTION | 1 | | | | | |
| 41 | 93210–55M14 | O-RING<br>JOINT TORIQUE | 1 | | | | | |

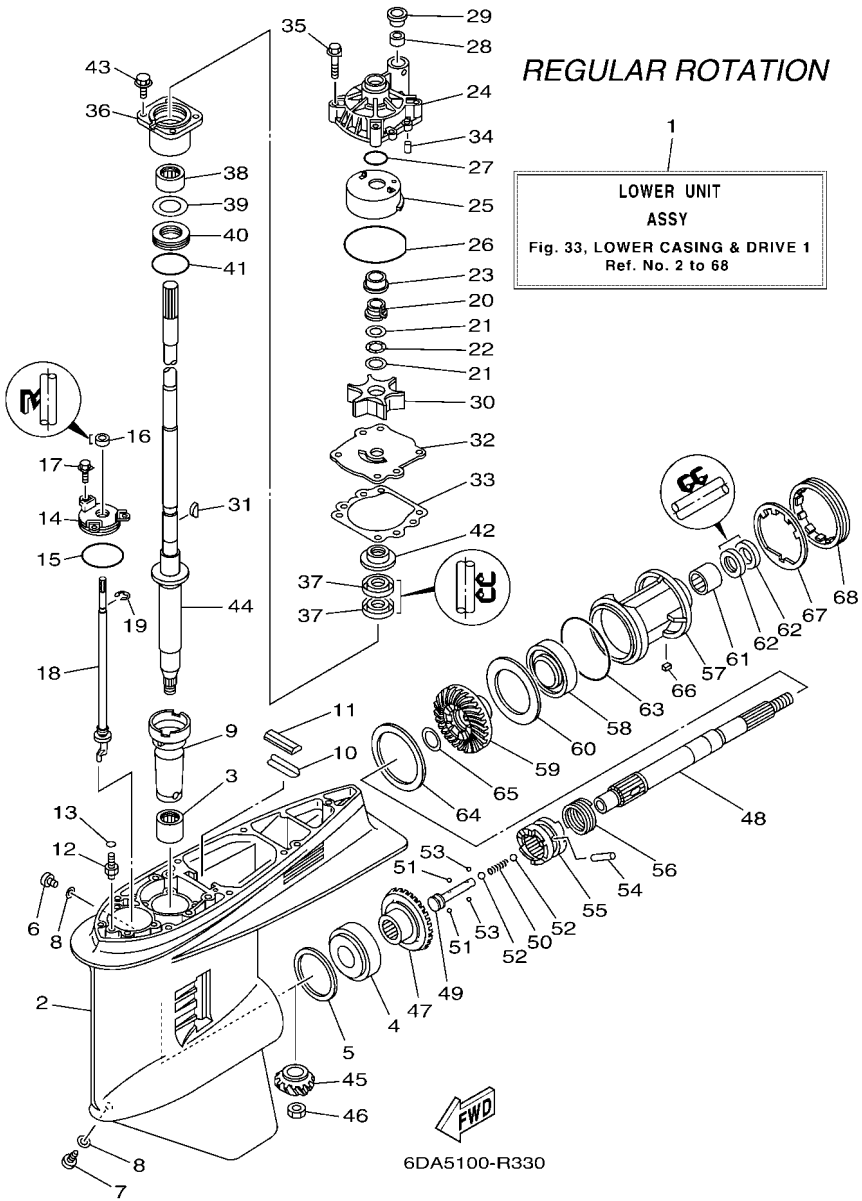


## FIG. 33 LOWER CASING & DRIVE 1 — BOITIER D'HELICE TRANSMISSION1

| REF. NO. | PART NO. N° PIECES | DESCRIPTION DESCRIPTION | 6DAB | 6DBB | | | | REMARKS REMARQUES |
|---|---|---|---|---|---|---|---|---|
| 42 | 6E5–45344–00 | COVER, OIL SEAL<br>FLASQE, JOINT D'HUILE | 1 | | | | | |
| 43 | 97E95–08525 | BOLT, HEXAGON W/W DEEP RECESS<br>VIS HEXAGONAL AVC RONDELLE | 4 | | | | | |
| 44 | 6DA–45501–10 | DRIVE SHAFT COMP.<br>ARBRE MOTEUR COMP. | 1 | | | | | X(25.3")<br>X(25.3") |
| | 63P–45501–01 | DRIVE SHAFT COMP.<br>ARBRE MOTEUR COMP. | 1 | | | | | L(20.3")<br>L(20.3") |
| 45 | 6DA–45551–00 | PINION (14T)<br>PIGNON D'ATTAQUE (14D) | 1 | | | | | |
| 46 | 90170–16M01 | NUT<br>ECROU | 1 | | | | | |
| 47 | 6DA–45560–00 | GEAR 1 (26T)<br>PIGNON 1 (26T) | 1 | | | | | |
| 48 | 6J9–45611–01 | SHAFT, PROPELLER<br>ARBRE, HELICE | 1 | | | | | |
| 49 | 6E5–45634–02 | SLIDE, SHIFT<br>CONTRE-POUSSOIR | 1 | | | | | |
| 50 | 90501–16M37 | SPRING, COMPRESSION<br>RESSORT, COMPRESSION | 1 | | | | | |
| 51 | 93507–32009 | BALL<br>BILLE | 2 | | | | | |
| 52 | 93511–32017 | BALL<br>BILLES | 2 | | | | | |
| 53 | 93503–16003 | BALL<br>BILLES | 2 | | | | | |
| 54 | 90250–08M07 | PIN, STRAIGHT<br>GOUPILLE, DROITE | 1 | | | | | |
| 55 | 6DA–45631–01 | CLUTCH, DOG<br>CRABOT | 1 | | | | | |
| 56 | 6E5–45633–01 | RING, CROSS PIN<br>JONC, GOUPILLE CRABOT | 1 | | | | | |
| 57 | 6J9–45332–00–CA | HOUSING, BEARING<br>FLASQUE, ROULEMENT | 1 | | | | | |
| 58 | 93306–209U0 | BEARING<br>ROULEMENT | 1 | | | | | |
| 59 | 6DA–45571–00 | GEAR 2 (26T)<br>PIGNON 2 (26T) | 1 | | | | | |
| 60 | 6G5–45576–10 | WASHER, THRUST 2<br>RONDELLE DE CALAGE 2 | 1 | | | | | |
| 61 | 93315–43061 | BEARING<br>ROULEMENT | 1 | | | | | |
| 62 | 93101–30M17 | OIL SEAL<br>JOINT SPY | 2 | | | | | |
| 63 | 93210–97M55 | O-RING<br>JOINT TORIQUE | 1 | | | | | |
| 64 | 6G5–45577–02 | SHIM (T:0.10MM)<br>CALE (T:0.10MM) | 1 | | | | | UR<br>UR |
| | 6G5–45577–10 | SHIM (T:0.12MM)<br>CALE (T:0.12MM) | 1 | | | | | UR<br>UR |
| | 6G5–45577–20 | SHIM (T:0.15MM)<br>CALE (T:0.15MM) | 1 | | | | | UR<br>UR |
| | 6G5–45577–30 | SHIM (T:0.18MM)<br>CALE (T:0.18MM) | 1 | | | | | UR<br>UR |

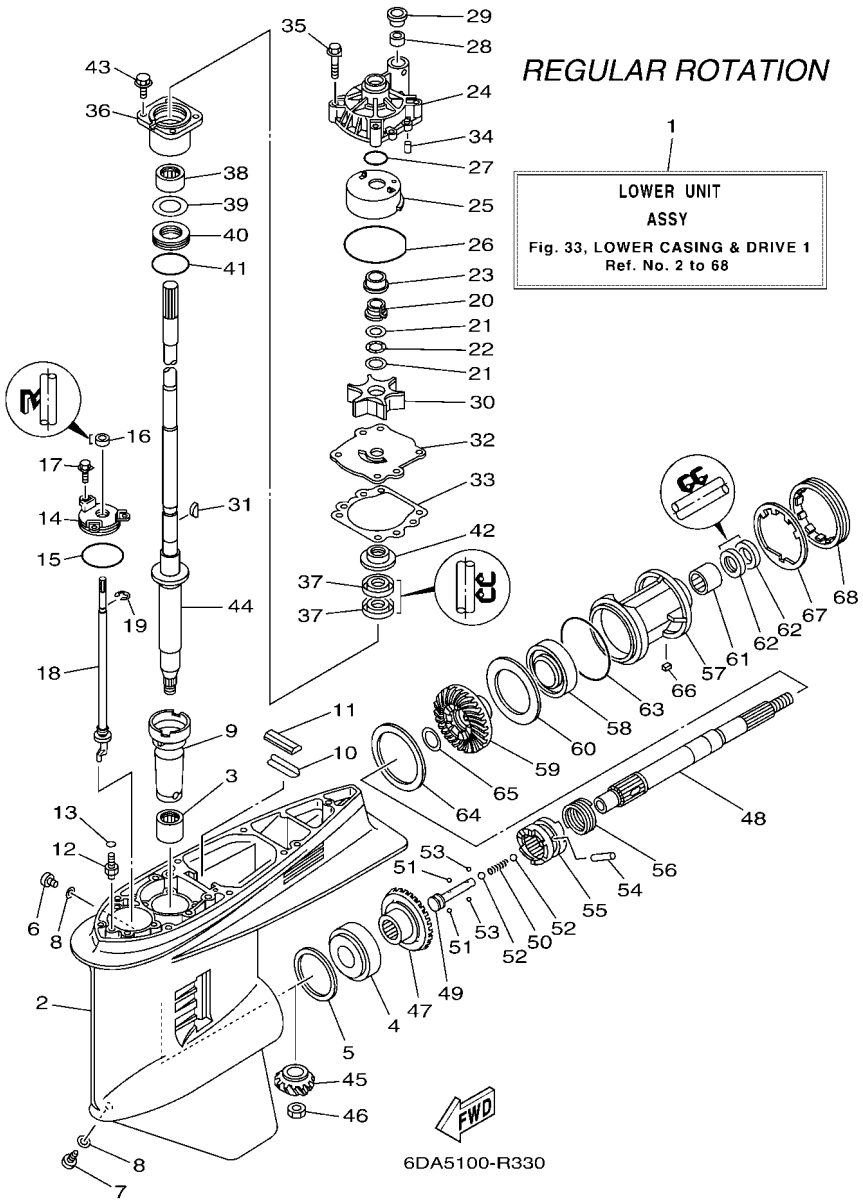


## FIG. 33 LOWER CASING & DRIVE 1 — BOITIER D'HELICE TRANSMISSION1

| REF. NO. | PART NO. N° PIECES | DESCRIPTION DESCRIPTION | 6DAB | 6DBB | | | | REMARKS REMARQUES |
|---|---|---|---|---|---|---|---|---|
| 64 | 6G5–45577–40 | SHIM (T:0.30MM)<br>CALE (T:0.30MM) | 1 | | | | | UR<br>UR |
| | 6G5–45577–50 | SHIM (T:0.40MM)<br>CALE (T:0.40MM) | 1 | | | | | UR<br>UR |
| | 6G5–45577–60 | SHIM (T:0.50MM)<br>CALE (T:0.50MM) | 1 | | | | | UR<br>UR |
| 65 | 90201–30M92 | WASHER, PLATE<br>RONDELLE, PLATE | 1 | | | | | |
| 66 | 90282–04M00 | KEY, STRAIGHT<br>CLAVETTE, DROITE | 1 | | | | | |
| 67 | 6G5–45383–01 | WASHER, CLAW<br>FREIN D'ECROU | 1 | | | | | |
| 68 | 6G5–45384–02 | NUT<br>ECROU | 1 | | | | | |

## FIG. 34 LOWER CASING & DRIVE 2 — BOITIER D HELICE TRANSMISSION2

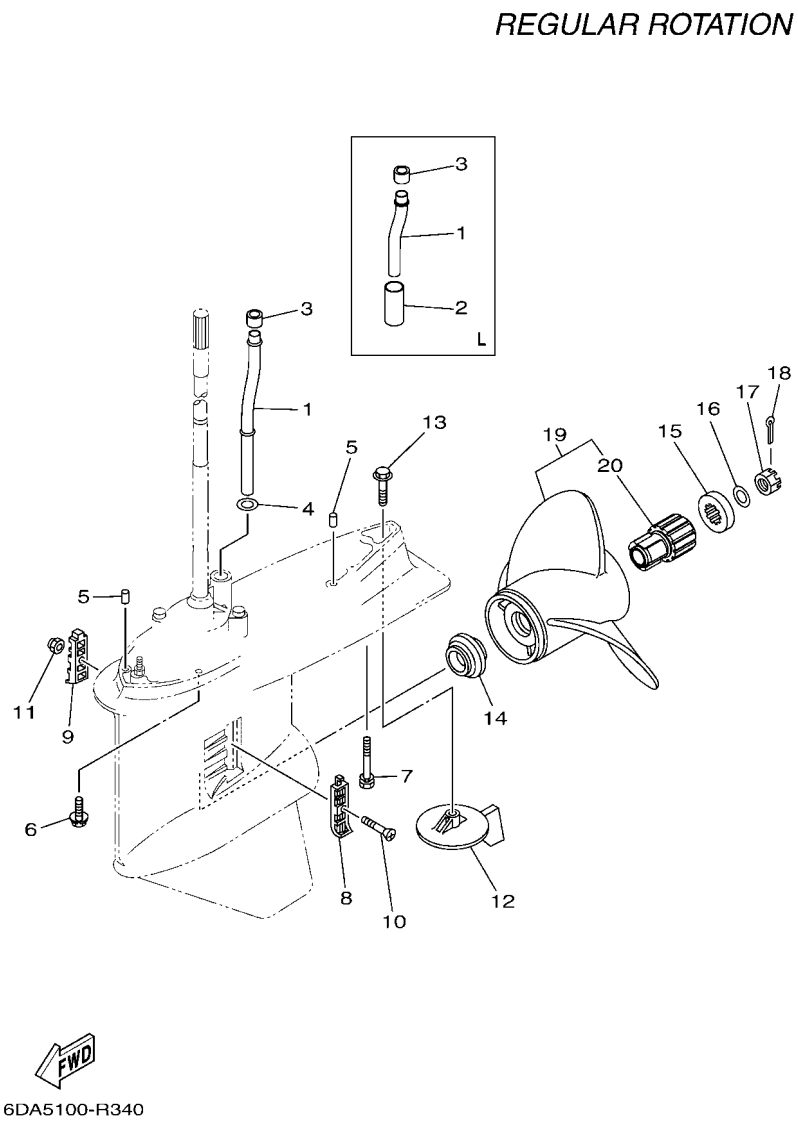


| REF. NO. | PART NO. N° PIECES | DESCRIPTION DESCRIPTION | 6DAB | 6DBB | | | | REMARKS REMARQUES |
|---|---|---|---|---|---|---|---|---|
| 1 | 6DA–44361–00 | TUBE, WATER 1<br>TUBE D'EAU 1 | 1 | | | | | X(25.3")<br>X(25.3") |
| | 6DA–44361–10 | TUBE, WATER 1<br>TUBE D'EAU 1 | 1 | | | | | L(20.3")<br>L(20.3") |
| 2 | 90445–23002 | HOSE (L59)<br>DURITE (L59) | 1 | | | | | L(20.3")<br>L(20.3") |
| 3 | 6E5–44365–01 | DAMPER, WATER SEAL 1<br>JOINT, TUBE D'EAU 1 | 1 | | | | | |
| 4 | 90202–16061 | WASHER, PLATE<br>RONDELLE, PLATE | 1 | | | | | X(25.3")<br>X(25.3") |
| 5 | 93608–16M16 | PIN, DOWEL<br>AXE | 2 | | | | | |
| 6 | 97E95–10645 | BOLT, HEXAGON W/W DEEP RECESS<br>VIS HEXAGONAL AVC RONDELLE | 6 | | | | | |
| 7 | 90119–10072 | BOLT, WITH WASHER<br>BOULON, AVEC RONDELLE | 1 | | | | | |
| 8 | 6J9–45214–00 | COVER, WATER INLET 1<br>GRILLE, ENTREE D'EAU 1 | 1 | | | | | |
| 9 | 6J9–45215–00 | COVER, WATER INLET 2<br>GRILLE, ENTREE D'EAU 2 | 1 | | | | | |
| 10 | 90152–05M08 | SCREW, COUNTERSUNK<br>VIS, TETE NOYEE | 1 | | | | | |
| 11 | 90185–05002 | NUT, NYLON<br>ECROU,AUTO-BLOQUANT | 1 | | | | | |
| 12 | 6J9–45371–01 | TAB-TRIM<br>ANODE DERIVE | 1 | | | | | |
| 13 | 90105–10M00 | BOLT, FLANGE<br>BOULON, A COLLERETTE | 1 | | | | | |
| 14 | 63P–45987–00 | SPACER 1<br>ENTRETOISE 1 | 1 | | | | | |
| 15 | 688–45997–01 | SPACER 2<br>ENTRETOISE 2 | 1 | | | | | |
| 16 | 92990–18200 | WASHER<br>RONDELLE, PLATE | 1 | | | | | |
| 17 | 90171–18M04 | NUT, CASTLE<br>ECROU, CRENELE | 1 | | | | | |
| 18 | 91490–40030 | PIN. COTTER<br>GOUPILLE | 1 | | | | | |
| 19 | 68F–45970–20 | PROPELLER (3X14-1/2"X15"-M)<br>HELICE (3X14-1/2"X15"-M) | 1 | | | | | UR SDS PROP.<br>UR SDS PROP. |
| | 68F–45972–20 | PROPELLER (3X14-1/4"X17"-M)<br>HELICE (3X14-1/4"X17"-M) | 1 | | | | | UR SDS PROP.<br>UR SDS PROP. |
| | 68F–45978–20 | PROPELLER (3X14-1/4"X18"-M)<br>HELICE (3X14-1/4"X18"-M) | 1 | | | | | UR SDS PROP.<br>UR SDS PROP. |
| | 68F–45974–20 | PROPELLER (3X13-3/4"X19"-M)<br>HELICE (3X13-3/4"X19"-M) | 1 | | | | | UR SDS PROP.<br>UR SDS PROP. |
| | 68F–45976–20 | PROPELLER (3X13-3/4"X21"-M)<br>HELICE (3X13-3/4"X21"-M) | 1 | | | | | UR SDS PROP.<br>UR SDS PROP. |
| 20 | 6CE–45C81–10 | .DAMPER RUBBER, PROPELLER 1<br>.AMORTISSEUR HELICE 1 | 1 | | | | | |

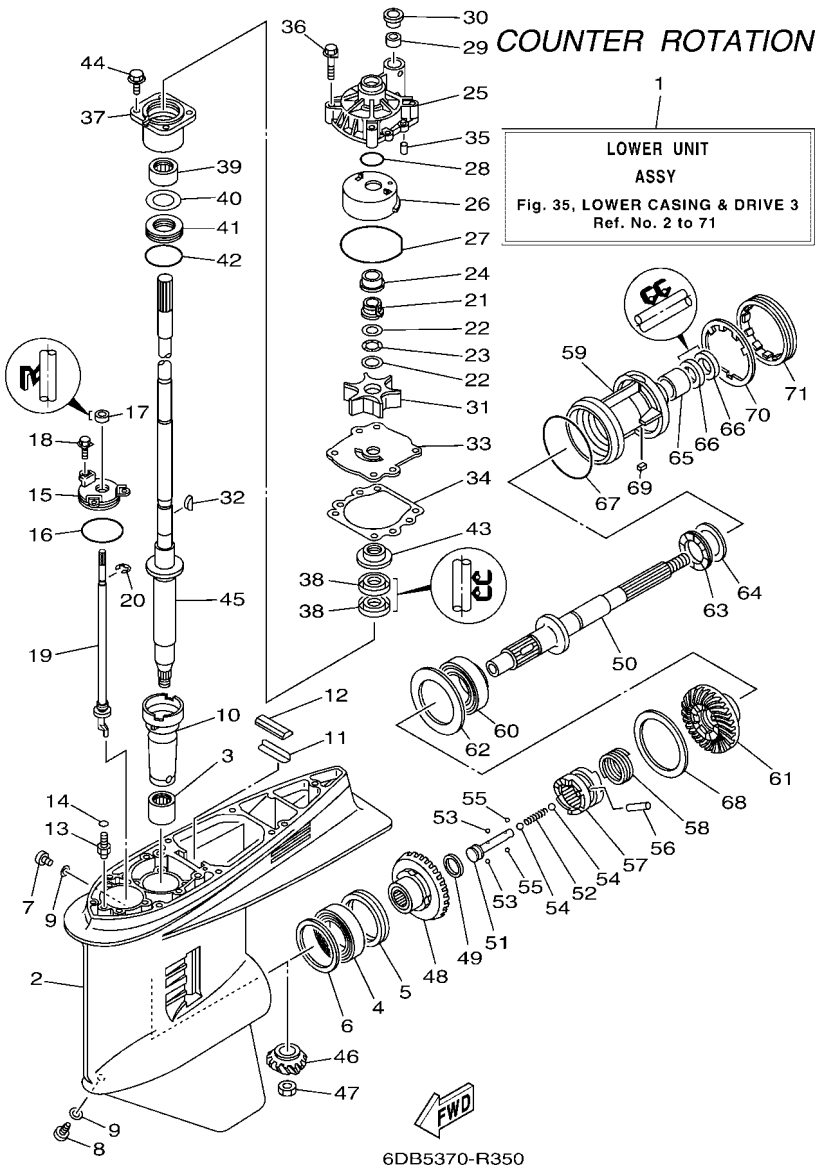


## FIG. 35 LOWER CASING & DRIVE 3 — BOITIER D'HELICE TRANSMISSION3

| REF. NO. | PART NO. N° PIECES | DESCRIPTION DESCRIPTION | 6DAB | 6DBB | | | | REMARKS REMARQUES |
|---|---|---|---|---|---|---|---|---|
| 1 | 6DB–45300–15–8D | LOWER UNIT ASSY<br>UNITE INFERIEURE (ENS.) | | 1 | | | | X(25.3"),LH<br>X(25.3"),LH |
| 2 | 6J9–45301–07–8D | CASING, LOWER<br>BEQUILLE | | 1 | | | | |
| 3 | 93311–928U5 | BEARING<br>ROULEMENT | | 1 | | | | |
| 4 | 93390–000U2 | BEARING<br>ROULEMENT | | 1 | | | | |
| 5 | 93341–465U4 | BEARING<br>CERVEAUX DE DIRECTION | | 1 | | | | |
| 6 | 6G5–45567–01 | SHIM (T:0.10MM)<br>CALE (T:0.10MM) | | 1 | | | | UR<br>UR |
| | 6G5–45567–10 | SHIM (T:0.12MM)<br>CALE (T:0.12MM) | | 1 | | | | UR<br>UR |
| | 6G5–45567–20 | SHIM (T:0.15MM)<br>CALE (T:0.15MM) | | 1 | | | | UR<br>UR |
| | 6G5–45567–30 | SHIM (T:0.18MM)<br>CALE (T:0.18MM) | | 1 | | | | UR<br>UR |
| | 6G5–45567–40 | SHIM (T:0.30MM)<br>CALE (T:0.30MM) | | 1 | | | | UR<br>UR |
| | 6G5–45567–50 | SHIM (T:0.40MM)<br>CALE (T:0.40MM) | | 1 | | | | UR<br>UR |
| | 6G5–45567–60 | SHIM (T:0.50MM)<br>CALE (T:0.50MM) | | 1 | | | | UR<br>UR |
| 7 | 90340–08002 | PLUG, STRAIGHT SCREW<br>PLOT, FILETE DROIT | | 1 | | | | |
| 8 | 688–45341–10 | PLUG, DRAIN<br>BOUCHON DE VIDANGE | | 1 | | | | |
| 9 | 90430–08003 | GASKET<br>JOINT | | 2 | | | | |
| 10 | 6G5–45536–01 | SLEEVE, DRIVE SHAFT<br>MANCHON, ARBRE MOTEUR | | 1 | | | | |
| 11 | 663–45376–00 | GUIDE, SEAL DAMPER<br>BUTEE, JOINT CAOUTCHOUC | | 1 | | | | |
| 12 | 688–45375–00 | DAMPER, SEAL<br>BOURRELET, CAOUTCHOUC | | 1 | | | | |
| 13 | 63P–45378–00 | NIPPLE, HOSE<br>RACCORD, TUYAU | | 1 | | | | |
| 14 | 93210–07003 | O-RING<br>JOINT TORIQUE | | 1 | | | | |
| 15 | 6E5–45321–00 | PLATE<br>PLAQUETTE | | 1 | | | | |
| 16 | 93210–58144 | O-RING<br>JOINT TORIQUE | | 1 | | | | |
| 17 | 93106–09014 | OIL SEAL<br>JOINT SPY | | 1 | | | | |
| 18 | 90119–06286 | BOLT, WITH WASHER<br>BOULON, AVEC RONDELLE | | 3 | | | | |
| 19 | 64P–44150–01 | SHIFT CAM ASSY<br>CAME D'INVERSION | | 1 | | | | |
| 20 | 99001–08600 | CIRCLIP<br>CIRCLIP | | 1 | | | | |
| 21 | 61A–45538–00 | SPACER 1<br>ENTRETOISE | | 1 | | | | |

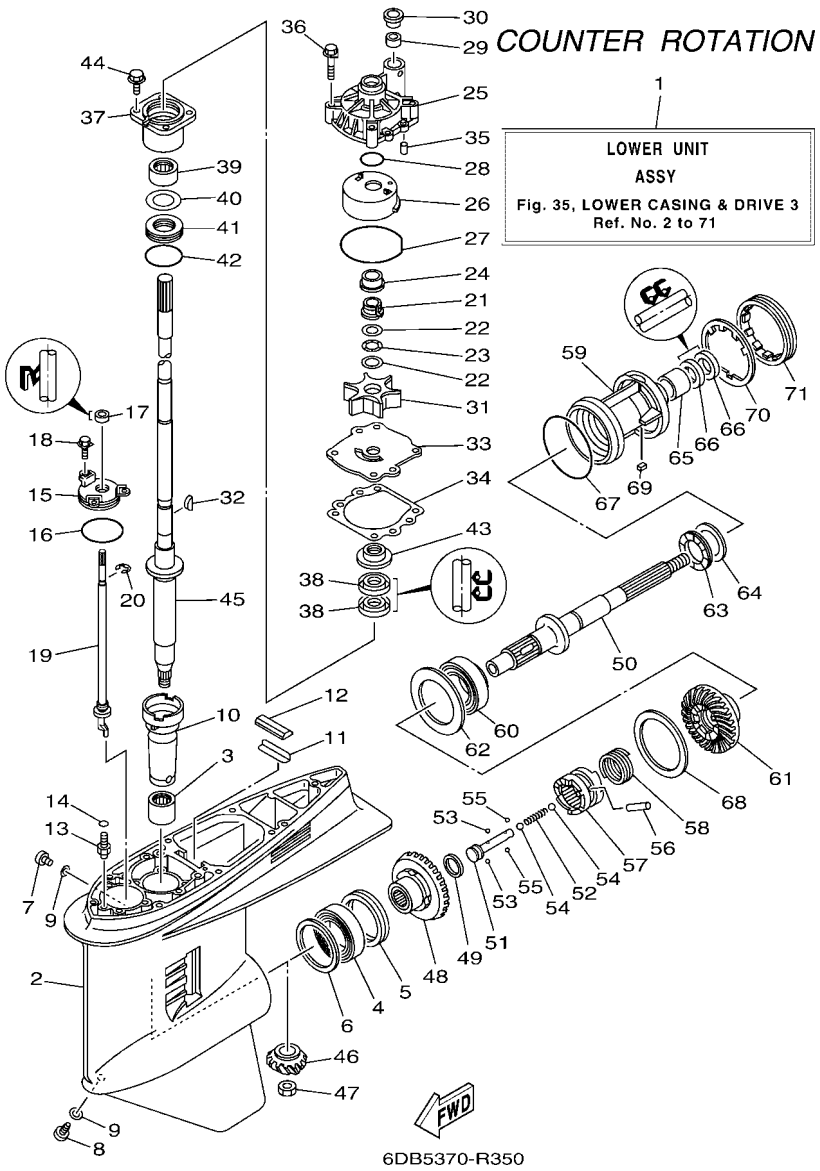


## FIG. 35 LOWER CASING & DRIVE 3 — BOITIER D'HELICE TRANSMISSION3

| REF. NO. | PART NO. N° PIECES | DESCRIPTION DESCRIPTION | 6DAB | 6DBB | | | | REMARKS REMARQUES |
|---|---|---|---|---|---|---|---|---|
| 22 | 90201–22M01 | WASHER, PLATE<br>RONDELLE, PLATE | | 2 | | | | |
| 23 | 90206–22M19 | WASHER, WAVE<br>RONDELLE, ONDULEE | | 1 | | | | |
| 24 | 61A–45527–00 | COLLAR, DRIVE SHAFT<br>ENTRETOISE | | 1 | | | | |
| 25 | 61A–44311–01 | HOUSING, WATER PUMP<br>CORPS, POMPE A EAU | | 1 | | | | |
| 26 | 61A–44322–02 | INSERT, CARTRIDGE<br>CUVETTE | | 1 | | | | |
| 27 | 93210–86M38 | O-RING<br>JOINT TORIQUE | | 1 | | | | |
| 28 | 93210–37160 | O-RING<br>JOINT TORIQUE | | 1 | | | | |
| 29 | 6E5–44365–01 | DAMPER, WATER SEAL 1<br>JOINT, TUBE D'EAU 1 | | 1 | | | | |
| 30 | 6E5–44312–00 | COVER, WATER PUMP HOUSING<br>COUVERCLE | | 1 | | | | |
| 31 | 6E5–44352–01 | IMPELLER<br>TURBINE | | 1 | | | | |
| 32 | 90280–04M05 | KEY, WOODRUFF<br>CLAVETTE, DEMI-LUNE | | 1 | | | | |
| 33 | 6G5–44323–01 | OUTER PLATE, CARTRIDGE<br>PLAQUE EXTERIEURE | | 1 | | | | |
| 34 | 6E5–44315–A0 | GASKET, WATER PUMP<br>JOINT, POMPE A EAU | | 1 | | | | |
| 35 | 93606–12019 | PIN, DOWEL<br>GOUPILLE | | 2 | | | | |
| 36 | 90119–08191 | BOLT, WITH WASHER<br>BOULON, AVEC RONDELLE | | 4 | | | | |
| 37 | 6E5–45331–00–9S | HOUSING, BEARING<br>FLASQUE, ROULEMENT | | 1 | | | | |
| 38 | 93101–28M16 | OIL SEAL<br>JOINT SPY | | 2 | | | | |
| 39 | 93317–330U2 | BEARING<br>ROULEMENT | | 1 | | | | |
| 40 | 6E5–45587–01 | SHIM (T:0.10MM)<br>CALE (T:0.10MM) | | 1 | | | | UR<br>UR |
| | 6E5–45587–10 | SHIM (T:0.12MM)<br>CALE (T:0.12MM) | | 1 | | | | UR<br>UR |
| | 6E5–45587–20 | SHIM (T:0.15MM)<br>CALE (T:0.15MM) | | 1 | | | | UR<br>UR |
| | 6E5–45587–30 | SHIM (T:0.18MM)<br>CALE (T:0.18MM) | | 1 | | | | UR<br>UR |
| | 6E5–45587–40 | SHIM (T:0.30MM)<br>CALE (T:0.30MM) | | 1 | | | | UR<br>UR |
| | 6E5–45587–50 | SHIM (T:0.40MM)<br>CALE (T:0.40MM) | | 1 | | | | UR<br>UR |
| | 6E5–45587–60 | SHIM (T:0.50MM)<br>CALE (T:0.50MM) | | 1 | | | | UR<br>UR |
| 41 | 93341–930V2 | BEARING<br>CERVEAUX DE DIRECTION | | 1 | | | | |
| 42 | 93210–55M14 | O-RING<br>JOINT TORIQUE | | 1 | | | | |

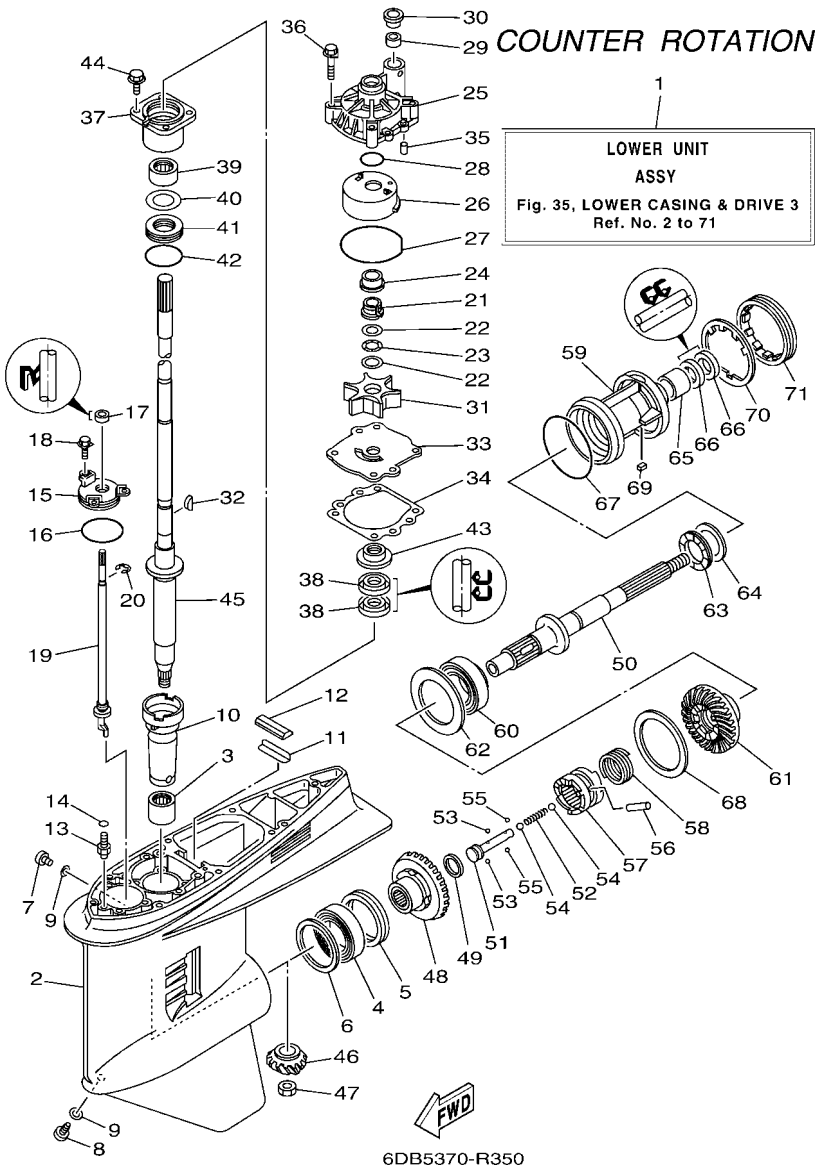


## FIG. 35 LOWER CASING & DRIVE 3 — BOITIER D'HELICE TRANSMISSION3

| REF. NO. | PART NO. N° PIECES | DESCRIPTION DESCRIPTION | 6DAB | 6DBB | | | | REMARKS REMARQUES |
|---|---|---|---|---|---|---|---|---|
| 43 | 6E5–45344–00 | COVER, OIL SEAL<br>FLASQE, JOINT D'HUILE | | 1 | | | | |
| 44 | 97E95–08525 | BOLT, HEXAGON W/W DEEP RECESS<br>VIS HEXAGONAL AVC RONDELLE | | 4 | | | | |
| 45 | 6DA–45501–10 | DRIVE SHAFT COMP.<br>ARBRE MOTEUR COMP. | | 1 | | | | X(25.3")<br>X(25.3") |
| 46 | 6DA–45551–00 | PINION (14T)<br>PIGNON D'ATTAQUE (14D) | | 1 | | | | |
| 47 | 90170–16M01 | NUT<br>ECROU | | 1 | | | | |
| 48 | 6DB–45560–00 | GEAR 1 (26T)<br>PIGNON 1 (26T) | | 1 | | | | |
| 49 | 90201–26015 | WASHER, PLATE<br>RONDELLE, PLATE | | 1 | | | | |
| 50 | 6K1–45611–11 | SHAFT, PROPELLER<br>ARBRE, HELICE | | 1 | | | | |
| 51 | 6E5–45634–02 | SLIDE, SHIFT<br>CONTRE-POUSSOIR | | 1 | | | | |
| 52 | 90501–16M37 | SPRING, COMPRESSION<br>RESSORT, COMPRESSION | | 1 | | | | |
| 53 | 93507–32009 | BALL<br>BILLE | | 2 | | | | |
| 54 | 93511–32017 | BALL<br>BILLES | | 2 | | | | |
| 55 | 93503–16003 | BALL<br>BILLES | | 2 | | | | |
| 56 | 90250–08M07 | PIN, STRAIGHT<br>GOUPILLE, DROITE | | 1 | | | | |
| 57 | 6DA–45631–01 | CLUTCH, DOG<br>CRABOT | | 1 | | | | |
| 58 | 6E5–45633–01 | RING, CROSS PIN<br>JONC, GOUPILLE CRABOT | | 1 | | | | |
| 59 | 6K1–45332–01–CA | HOUSING, BEARING<br>FLASQUE, ROULEMENT | | 1 | | | | |
| 60 | 93332–00048 | BEARING<br>ROULEMENT | | 1 | | | | |
| 61 | 6DB–45570–01 | GEAR 2 (26T)<br>PIGNON 2 (26T) | | 1 | | | | |
| 62 | 6K1–45576–00 | WASHER, THRUST 2<br>RONDELLE DE CALAGE 2 | | 1 | | | | |
| 63 | 93341–440U5 | BEARING<br>CERVEAUX DE DIRECTION | | 1 | | | | |
| 64 | 6K1–45578–01 | SHIM (T:0.10MM)<br>CALE (T:0.10MM) | | 1 | | | | UR<br>UR |
| | 6K1–45578–10 | SHIM (T:0.12MM)<br>CALE (T:0.12MM) | | 1 | | | | UR<br>UR |
| | 6K1–45578–20 | SHIM (T:0.15MM)<br>CALE (T:0.15MM) | | 1 | | | | UR<br>UR |
| | 6K1–45578–30 | SHIM (T:0.18MM)<br>CALE (T:0.18MM) | | 1 | | | | UR<br>UR |
| | 6K1–45578–40 | SHIM (T:0.30MM)<br>CALE (T:0.30MM) | | 1 | | | | UR<br>UR |
| | 6K1–45578–50 | SHIM (T:0.40MM)<br>CALE (T:0.40MM) | | 1 | | | | UR<br>UR |

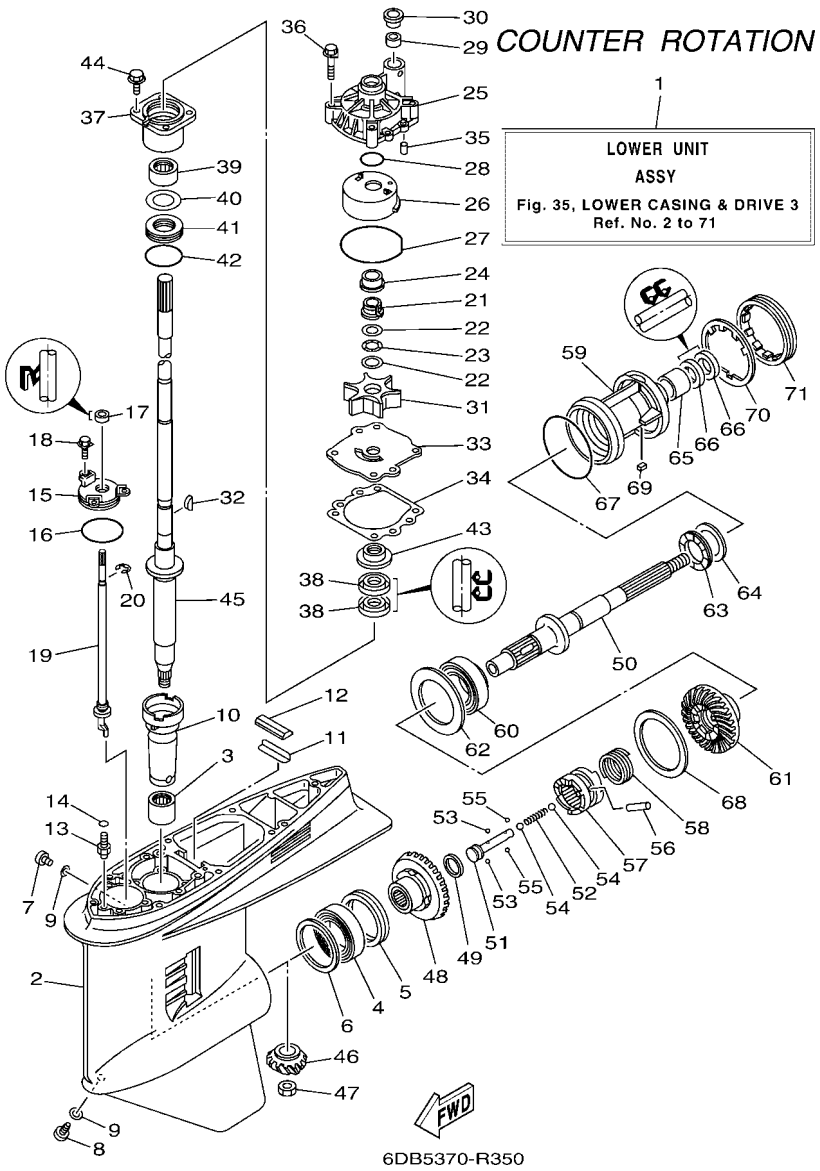


## FIG. 35 LOWER CASING & DRIVE 3 — BOITIER D'HELICE TRANSMISSION3

| REF. NO. | PART NO. N° PIECES | DESCRIPTION DESCRIPTION | 6DAB | 6DBB | | | | REMARKS REMARQUES |
|---|---|---|---|---|---|---|---|---|
| 64 | 6K1–45578–60 | SHIM (T:0.50MM)<br>CALE (T:0.50MM) | | 1 | | | | UR<br>UR |
| 65 | 93315–43061 | BEARING<br>ROULEMENT | | 1 | | | | |
| 66 | 93101–30M17 | OIL SEAL<br>JOINT SPY | | 2 | | | | |
| 67 | 93210–97M55 | O-RING<br>JOINT TORIQUE | | 1 | | | | |
| 68 | 6G5–45577–02 | SHIM (T:0.10MM)<br>CALE (T:0.10MM) | | 1 | | | | UR<br>UR |
| | 6G5–45577–10 | SHIM (T:0.12MM)<br>CALE (T:0.12MM) | | 1 | | | | UR<br>UR |
| | 6G5–45577–20 | SHIM (T:0.15MM)<br>CALE (T:0.15MM) | | 1 | | | | UR<br>UR |
| | 6G5–45577–30 | SHIM (T:0.18MM)<br>CALE (T:0.18MM) | | 1 | | | | UR<br>UR |
| | 6G5–45577–40 | SHIM (T:0.30MM)<br>CALE (T:0.30MM) | | 1 | | | | UR<br>UR |
| | 6G5–45577–50 | SHIM (T:0.40MM)<br>CALE (T:0.40MM) | | 1 | | | | UR<br>UR |
| | 6G5–45577–60 | SHIM (T:0.50MM)<br>CALE (T:0.50MM) | | 1 | | | | UR<br>UR |
| 69 | 90282–04M00 | KEY, STRAIGHT<br>CLAVETTE, DROITE | | 1 | | | | |
| 70 | 6G5–45383–01 | WASHER, CLAW<br>FREIN D'ECROU | | 1 | | | | |
| 71 | 6G5–45384–02 | NUT<br>ECROU | | 1 | | | | |

## FIG. 36 LOWER CASING & DRIVE 4 — BOITIER D'HELICE TRANSMISSION4

*COUNTER ROTATION*

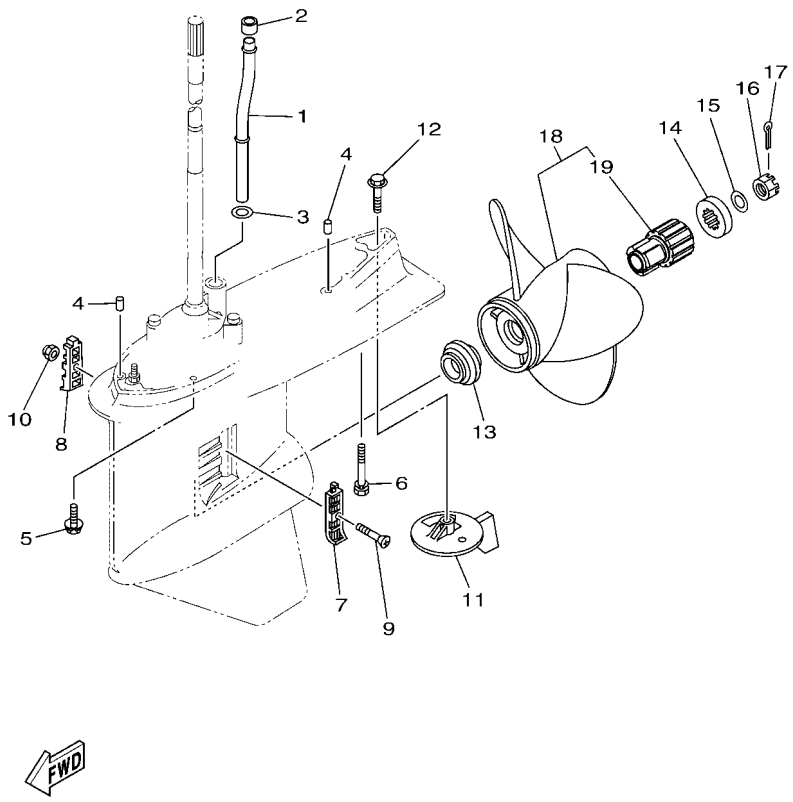


6DB5100-R340

| REF. NO. | PART NO. N° PIECES | DESCRIPTION DESCRIPTION | 6DAB | 6DBB | | | | REMARKS REMARQUES |
|---|---|---|---|---|---|---|---|---|
| 1 | 6DA–44361–00 | TUBE, WATER 1<br>TUBE D'EAU 1 | | 1 | | | | X(25.3")<br>X(25.3") |
| 2 | 6E5–44365–01 | DAMPER, WATER SEAL 1<br>JOINT, TUBE D'EAU 1 | | 1 | | | | |
| 3 | 90202–16061 | WASHER, PLATE<br>RONDELLE, PLATE | | 1 | | | | X(25.3")<br>X(25.3") |
| 4 | 93608–16M16 | PIN, DOWEL<br>AXE | | 2 | | | | |
| 5 | 97E95–10645 | BOLT, HEXAGON W/W DEEP RECESS<br>VIS HEXAGONAL AVC RONDELLE | | 6 | | | | |
| 6 | 90119–10072 | BOLT, WITH WASHER<br>BOULON, AVEC RONDELLE | | 1 | | | | |
| 7 | 6J9–45214–00 | COVER, WATER INLET 1<br>GRILLE, ENTREE D'EAU 1 | | 1 | | | | |
| 8 | 6J9–45215–00 | COVER, WATER INLET 2<br>GRILLE, ENTREE D'EAU 2 | | 1 | | | | |
| 9 | 90152–05M08 | SCREW, COUNTERSUNK<br>VIS, TETE NOYEE | | 1 | | | | |
| 10 | 90185–05002 | NUT, NYLON<br>ECROU,AUTO-BLOQUANT | | 1 | | | | |
| 11 | 6K1–45371–02 | TAB-TRIM<br>ANODE DERIVE | | 1 | | | | |
| 12 | 90105–10M00 | BOLT, FLANGE<br>BOULON, A COLLERETTE | | 1 | | | | |
| 13 | 63P–45987–00 | SPACER 1<br>ENTRETOISE 1 | | 1 | | | | |
| 14 | 688–45997–01 | SPACER 2<br>ENTRETOISE 2 | | 1 | | | | |
| 15 | 92990–18200 | WASHER<br>RONDELLE, PLATE | | 1 | | | | |
| 16 | 90171–18M04 | NUT, CASTLE<br>ECROU, CRENELE | | 1 | | | | |
| 17 | 91490–40030 | PIN. COTTER<br>GOUPILLE | | 1 | | | | |
| 18 | 68G–45970–20 | PROPELLER (3X14-1/2"X15"-ML)<br>HELICE (3X14-1/2"X15"-ML) | | 1 | | | | UR SDS PROP.<br>UR SDS PROP. |
| | 68G–45972–20 | PROPELLER (3X14-1/4"X17"-ML)<br>HELICE (3X14-1/4"X17"-ML) | | 1 | | | | UR SDS PROP.<br>UR SDS PROP. |
| | 68G–45978–20 | PROPELLER (3X14-1/4"X18"-ML)<br>HELICE (3X14-1/4"X18"-ML) | | 1 | | | | UR SDS PROP.<br>UR SDS PROP. |
| | 68G–45974–20 | PROPELLER (3X13-3/4"X19"-ML)<br>HELICE (3X13-3/4"X19"-ML) | | 1 | | | | UR SDS PROP.<br>UR SDS PROP. |
| | 68G–45976–20 | PROPELLER (3X13-3/4"X21"-ML)<br>HELICE (3X13-3/4"X21"-ML) | | 1 | | | | UR SDS PROP.<br>UR SDS PROP. |
| 19 | 6CE–45C81–10 | .DAMPER RUBBER, PROPELLER 1<br>.AMORTISSEUR HELICE 1 | | 1 | | | | |

## FIG. 37 STEERING GUIDE ATTACHMENT 1 DIRECTION GUIDE ACCESSOIRE 1

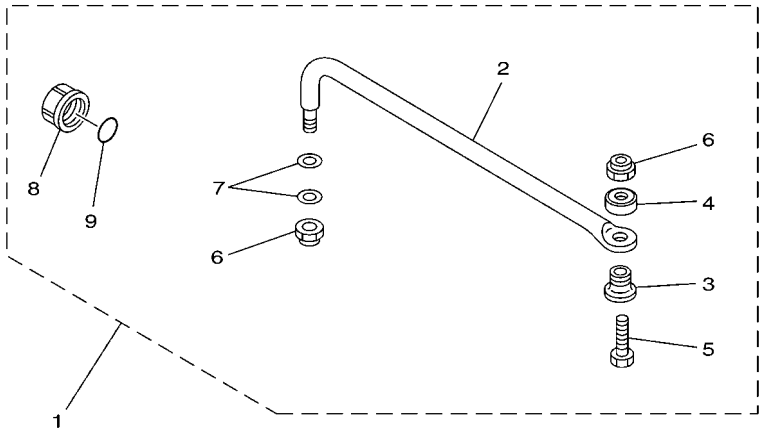


67H0100-9290

| REF. NO. | PART NO. N° PIECES | DESCRIPTION DESCRIPTION | 6DAB | 6DBB | | | | REMARKS REMARQUES |
|---|---|---|---|---|---|---|---|---|
| 1 | 6E5–61350–02 | STEERING GUIDE ATTACHMENT KIT<br>FIXATIONS DE DIRECTION | 1 | | | | | AP<br>AP |
| 2 | 6E5–61351–01 | .ROD, STEERING LINK<br>.RENVOI DE DIRECTION | 1 | | | | | |
| 3 | 90387–10M61 | .COLLAR<br>.COLLERETTE | 1 | | | | | |
| 4 | 90560–12M01 | .SPACER<br>.ENTRETOISE | 1 | | | | | |
| 5 | 6E5–61355–00 | .BOLT<br>.BOULON | 1 | | | | | |
| 6 | 90185–09M01 | .NUT, SELF-LOCKING<br>.ECROU,AUTO-BLOQUANT | 2 | | | | | |
| 7 | 90201–10M20 | .WASHER, PLATE<br>.RONDELLE, PLATE | 2 | | | | | |
| 8 | 6E5–43145–01 | .CAP, CLAMP BRACKET<br>.CAPUCHON, PRESSE | 1 | | | | | |
| 9 | 93210–16275 | .O-RING<br>.JOINT TORIQUE | 1 | | | | | |

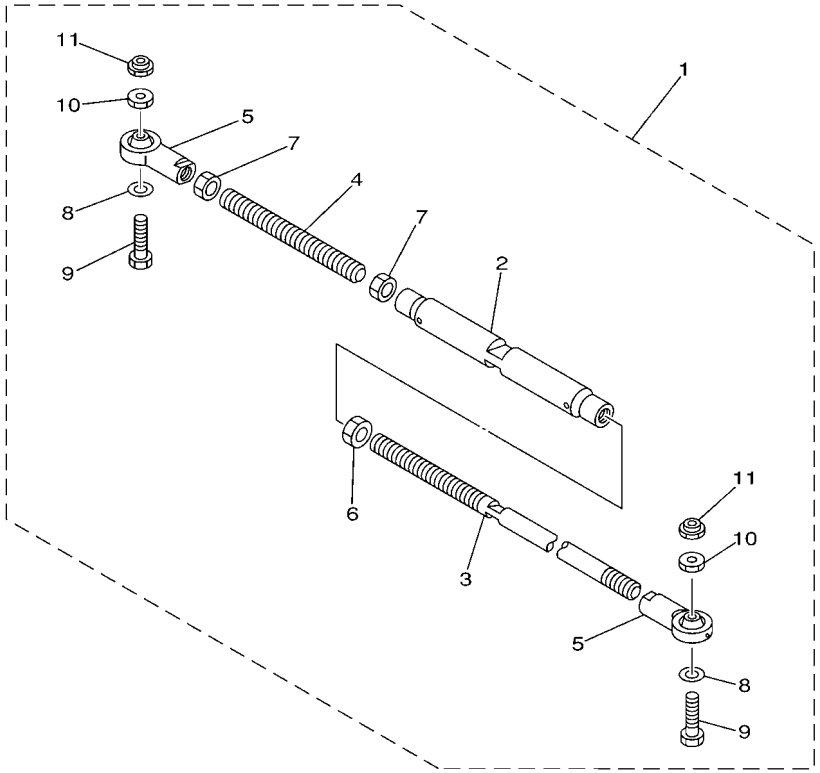


67H0100-0300

## FIG. 38 STEERING GUIDE ATTACHMENT 2 — DIRECTION GUIDE ACCESSOIRE 2

| REF. NO. | PART NO. N° PIECES | DESCRIPTION DESCRIPTION | 6DAB | 6DBB | | | | REMARKS REMARQUES |
|---|---|---|---|---|---|---|---|---|
| 1 | 6E5–61301–01 | TWIN KIT (L:600-800MM)<br>JUMELE KIT (L:600-800MM) | | 1 | | | | AP<br>AP |
| 2 | 6E5–61313–00 | .ADJUSTER<br>.TENDEUR | | 1 | | | | |
| 3 | 6E5–61311–11 | .TIE BAR<br>.BARRE D'ACCOUPLEMENT | | 1 | | | | |
| 4 | 6E5–61315–00 | .TIE BAR<br>.BARRE D'ACCOUPLEMENT | | 1 | | | | |
| 5 | 6E5–61303–01 | .STEERING AXLE COMP.<br>.AXLE COMP. | | 2 | | | | |
| 6 | 90170–14M06 | .NUT<br>.ECROU | | 1 | | | | |
| 7 | 95380–14700 | .NUT<br>.ECROU | | 2 | | | | |
| 8 | 90201–10M76 | .WASHER, PLATE<br>.RONDELLE, PLATE | | 2 | | | | |
| 9 | 90101–09M70 | .BOLT<br>.BOULON | | 2 | | | | |
| 10 | 90170–09M05 | .NUT<br>.ECROU | | 2 | | | | |
| 11 | 90185–09M01 | .NUT, SELF-LOCKING<br>.ECROU,AUTO-BLOQUANT | | 2 | | | | |

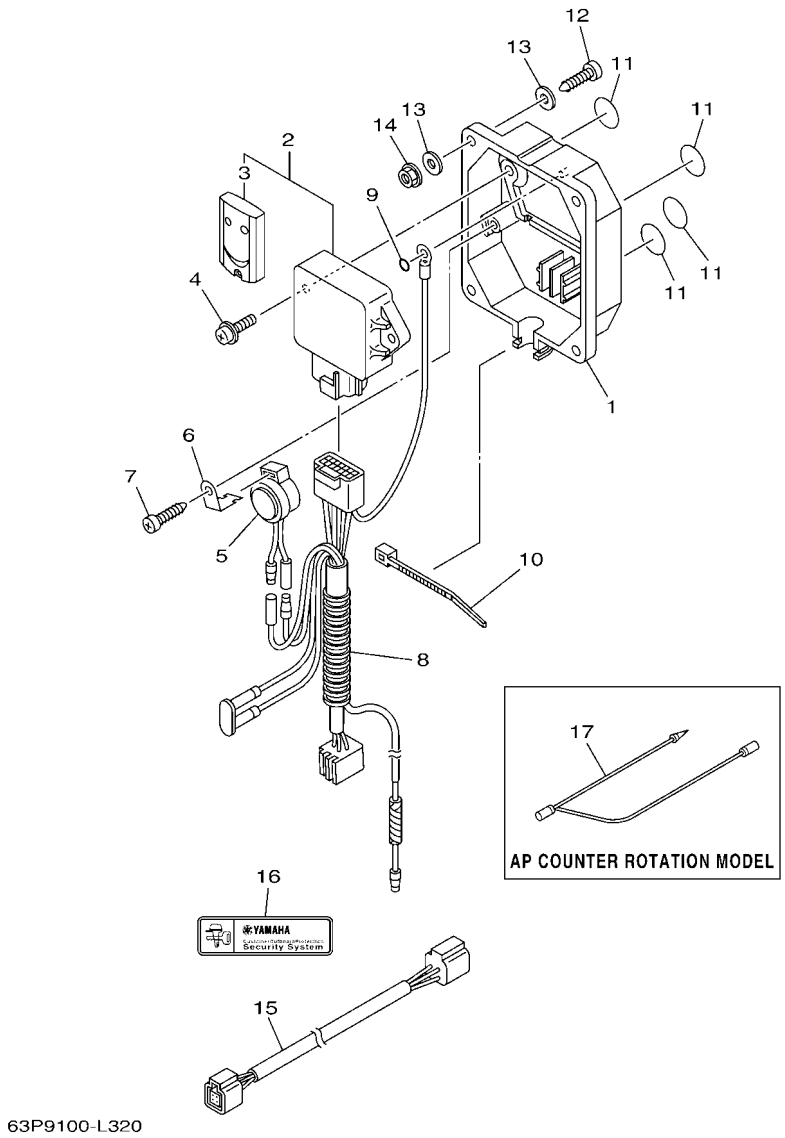


## FIG. 39 OPTIONAL PARTS 1 — PIECES OPTIONNELLES 1

| REF. NO. | PART NO. N° PIECES | DESCRIPTION DESCRIPTION | 6DAB | 6DBB | | | | REMARKS REMARQUES |
|---|---|---|---|---|---|---|---|---|
| 1 | 6Y8–86267–00 | CASE COMPLETE 1<br>CARTER (ENS.) 1 | 1 | | | | | |
| 2 | 6Y8–86260–03 | REMOTE CONTROL UNIT ASSY<br>UNITE DE TELECOMMANDE (ENS.) | 1 | | | | | |
| 3 | 6AA–86261–01 | .XMTR. COMP.<br>.XMTR. COMP. | 2 | | | | | |
| 4 | 97980–06216 | SCREW, WITH WASHER<br>VIS, AVEC RONDELLE | 2 | | | | | |
| 5 | 6X4–83383–00 | BUZZER<br>RONFLEUR | 1 | | | | | |
| 6 | 6X4–83386–00 | STAY, BUZZER<br>SUPPOR, RONFLEUR | 1 | | | | | |
| 7 | 97780–60620 | SCREW, TAPPING<br>VIS, TETE BOMBEE | 1 | | | | | |
| 8 | 6Y8–82509–10 | WIRE, SUB LEAD<br>FIL, SECONDAIRE | 1 | | | | | |
| 9 | 93210–04279 | O-RING<br>JOINT TORIQUE | 1 | | | | | |
| 10 | 90465–11M10 | CLAMP<br>BRIDE | 1 | | | | | |
| 11 | 6Y8–8454G–00 | PATCH 1<br>TAMPON 1 | 4 | | | | | |
| 12 | 90167–06M00 | SCREW, TAPPING<br>VIS, TETE FRAISEE | 4 | | | | | UR<br>UR |
| | 97880–06035 | SCREW, PAN HEAD<br>VIS, TETE TRONCONIQUE | 4 | | | | | UR<br>UR |
| 13 | 90201–06M30 | WASHER, PLATE<br>RONDELLE, PLATE | 8 | | | | | |
| 14 | 95780–06300 | NUT, FLANGE<br>ECROU | 4 | | | | | |
| 15 | 6Y8–82521–11 | 2FT PIGTAIL BUS<br>FAISCEAU (L: 2FT.) | 1 | | | | | |
| 16 | 6Y8–48277–00 | STICKER 1<br>ETIQUETTE 1 | 4 | | | | | |
| 17 | 6H5–81315–00 | LEAD WIRE ASSY<br>FIL | | 1 | | | | AP<br>AP |

## FIG. 40 OPTIONAL PARTS 2 — PIECES OPTIONNELLES 2

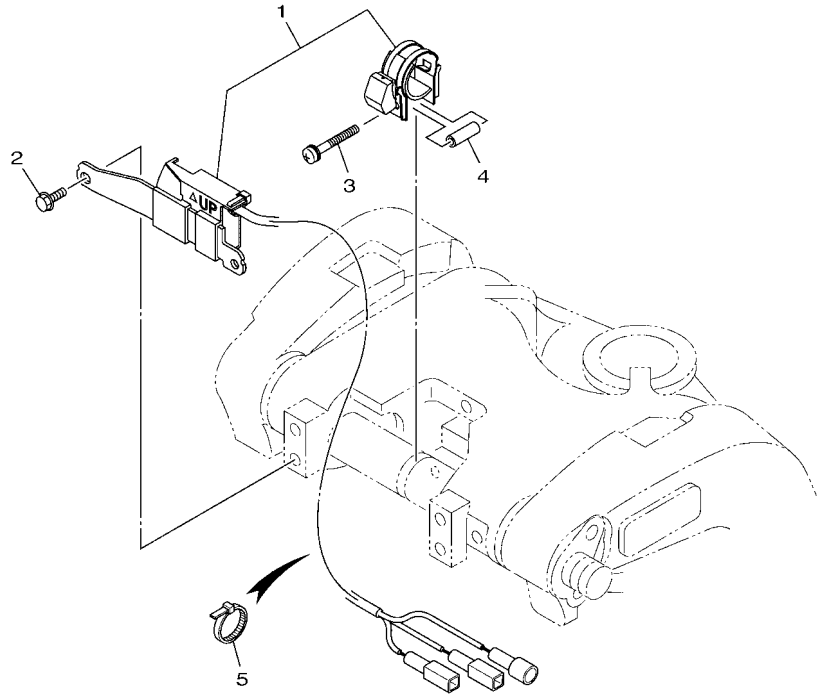

6DA4100-Q370

| REF. NO. | PART NO. N° PIECES | DESCRIPTION DESCRIPTION | 6DAB | 6DBB | | | | REMARKS REMARQUES |
|---|---|---|---|---|---|---|---|---|
| 1 | 63P–825E0–02 | TILT LIMIT SWITCH ASSY<br>COMMUTATEUR, LIMIT INCLINAISON | 1 | 1 | | | | |
| 2 | 97E95–06516 | BOLT, HEXAGON W/W DEEP RECESS<br>VIS HEXAGONAL AVC RONDELLE | 2 | 2 | | | | |
| 3 | 90159–05059 | SCREW, WITH WASHER<br>VIS, AVEC RONDELLE | 1 | 1 | | | | |
| 4 | 90387–05004 | COLLAR<br>COLLERETTE | 1 | 1 | | | | |
| 5 | 90465–11M10 | CLAMP<br>BRIDE | 5 | 5 | | | | |

## FIG. 41 REPAIR KIT 1 — KITS DE REPARATION 1

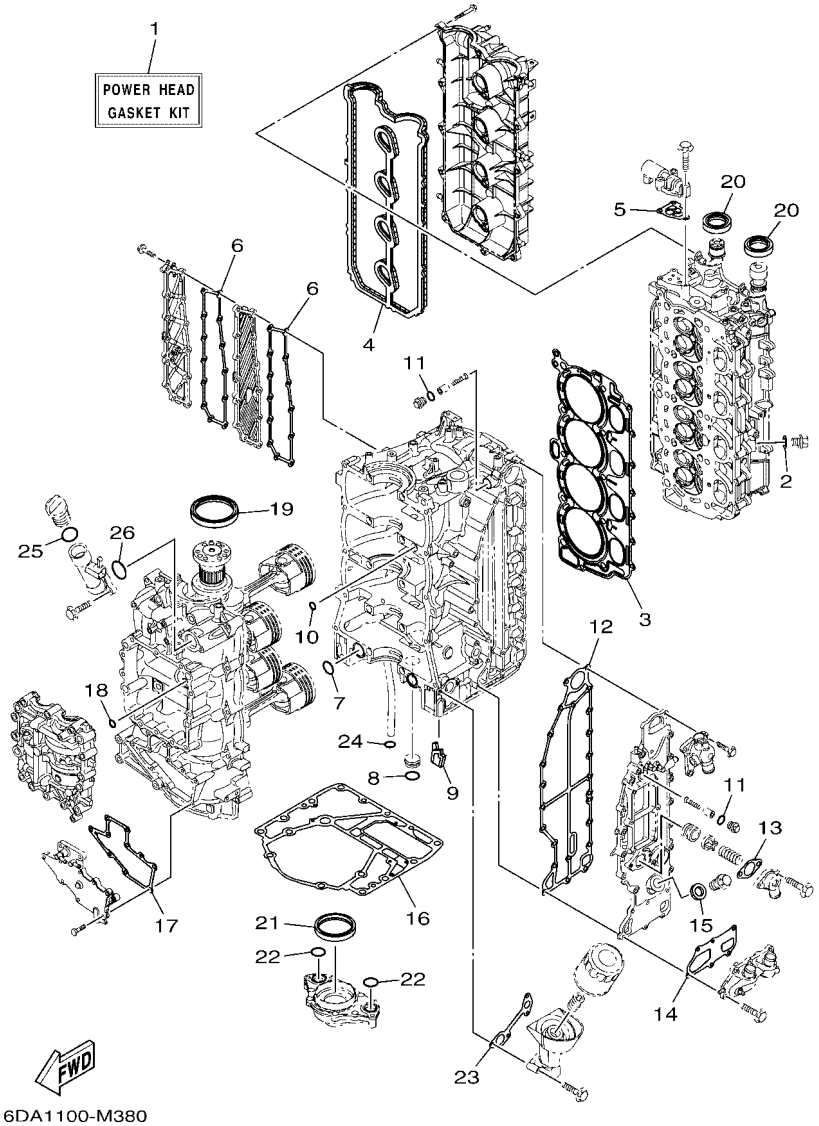


| REF. NO. | PART NO. N° PIECES | DESCRIPTION DESCRIPTION | 6DAB | 6DBB | | | | REMARKS REMARQUES |
|---|---|---|---|---|---|---|---|---|
| 1 | 6DA–W0001–01 | POWER HEAD GASKET KIT<br>POCHETTE DE JINTS TETE MOTRICE | 1 | 1 | | | | |
| 2 | 90430–14115 | .GASKET<br>.JOINT | 1 | 1 | | | | |
| 3 | 6DA–11181–00 | .GASKET, CYLINDER HEAD 1<br>.JOINT, DE CULASSE 1 | 1 | 1 | | | | |
| 4 | 6DA–11193–00 | .GASKET, HEAD COVER 1<br>.JOINT, COUVERCLE DE CULASSE 1 | 1 | 1 | | | | |
| 5 | 6CB–1242F–00 | .GASKET, FILTER<br>.JOINT, FILTRE | 1 | 1 | | | | |
| 6 | 6DA–15353–01 | .GASKET, DRAIN<br>.JOINT, PLOT DE VIDANGE | 2 | 2 | | | | |
| 7 | 93210–25552 | .O-RING<br>.JOINT TORIQUE | 2 | 2 | | | | |
| 8 | 93210–25647 | .O-RING<br>.JOINT TORIQUE | 1 | 1 | | | | |
| 9 | 6DA–14664–00 | .GROMMET, WATER SHUT<br>.PASSE-FIL | 1 | 1 | | | | |
| 10 | 93210–12648 | .O-RING<br>.JOINT TORIQUE | 1 | 1 | | | | |
| 11 | 93210–13M63 | .O-RING<br>.JOINT TORIQUE | 2 | 2 | | | | |
| 12 | 6DA–41114–01 | .GASKET, EXHAUST OUTER COVER<br>.JOINT, COUVERCLE D'ECHAPPEMENT | 1 | 1 | | | | |
| 13 | 60V–11382–A0 | .GASKET 2<br>.JOINT 2 | 1 | 1 | | | | |
| 14 | 6DA–11381–01 | .GASKET 1<br>.JOINT 1 | 1 | 1 | | | | |
| 15 | 90201–186F1 | .WASHER, PLATE<br>.RONDELLE, PLATE | 1 | 1 | | | | |
| 16 | 63P–11351–03 | .GASKET, CYLINDER<br>.JOINT, D'EMBASE | 1 | 1 | | | | |
| 17 | 6DA–15451–01 | .GASKET, CRANKCASE COVER 1<br>.JOINT, COUVERCLE DE CARTER 1 | 1 | 1 | | | | |
| 18 | 93210–08001 | .O-RING<br>.JOINT TORIQUE | 1 | 1 | | | | |
| 19 | 93102–85008 | .OIL SEAL<br>.JOINT SPY | 1 | 1 | | | | |
| 20 | 93102–38008 | .OIL SEAL<br>.JOINT SPY | 2 | 2 | | | | |
| 21 | 6CB–11355–00 | .SEAL, CYLINDER 1<br>.JOINT, SPY CYLINDRE | 1 | 1 | | | | |
| 22 | 93210–25552 | .O-RING<br>.JOINT TORIQUE | 2 | 2 | | | | |
| 23 | 6DA–13475–00 | .GASKET<br>.JOINT | 1 | 1 | | | | |
| 24 | 93210–19MJ3 | .O-RING<br>.JOINT TORIQUE | 1 | 1 | | | | |
| 25 | 93210–24M79 | .O-RING<br>.JOINT TORIQUE | 1 | 1 | | | | |
| 26 | 93210–357A3 | .O-RING<br>.JOINT TORIQUE | 1 | 1 | | | | |

## FIG. 42 REPAIR KIT 2 — KITS DE REPARATION 2

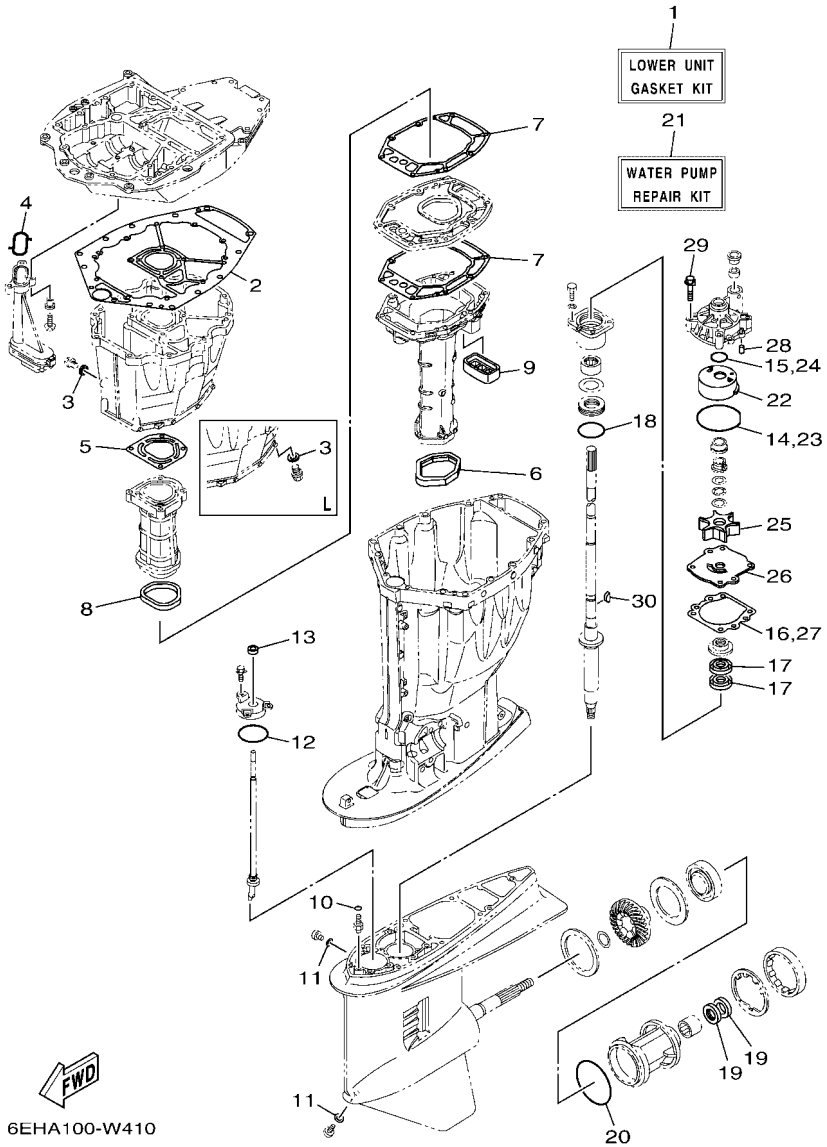


| REF. NO. | PART NO. N° PIECES | DESCRIPTION DESCRIPTION | 6DAB | 6DBB | | | | REMARKS REMARQUES |
|---|---|---|---|---|---|---|---|---|
| 1 | 63P–W0001–22 | LOWER UNIT GASKET KIT<br>POCHETTE DE JOINTS EMBASE | 1 | 1 | | | | |
| 2 | 63P–15312–02 | .GASKET, OIL PAN<br>.JOINT DE VENTILATEUR D'HUILE | 1 | 1 | | | | |
| 3 | 90430–14M09 | .GASKET<br>.JOINT | 1 | 1 | | | | |
| 4 | 63P–13415–00 | .SEAL, OIL STRAINER<br>.JOINT, FILTRE A HUILE | 1 | 1 | | | | |
| 5 | 63P–41133–A0 | .GASKET, EXHAUST MANIFOLD 1<br>.JOINT, PIPE D'ECHAPPEMENT | 1 | 1 | | | | |
| 6 | 69J–45123–00 | .GASKET, MUFFLER<br>.JOINT, POT DE DETENTE | 1 | 1 | | | | |
| 7 | 63P–41134–A1 | .GASKET, EXHAUST MANIFOLD<br>.JOINT, PIPE D'ECHAPPEMENT | 2 | 2 | | | | |
| 8 | 63P–41138–00 | .SEAL, EXT. 1<br>.JOINT DE GROUPE 1 | 1 | 1 | | | | |
| 9 | 69J–45127–01 | .SEAL<br>.JOINT | 1 | 1 | | | | |
| 10 | 93210–07003 | .O-RING<br>.JOINT TORIQUE | 2 | 2 | | | | |
| 11 | 90430–08003 | .GASKET<br>.JOINT | 2 | 2 | | | | |
| 12 | 93210–58144 | .O-RING<br>.JOINT TORIQUE | 1 | 1 | | | | |
| 13 | 93106–09014 | .OIL SEAL<br>.JOINT SPY | 1 | 1 | | | | |
| 14 | 93210–86M38 | .O-RING<br>.JOINT TORIQUE | 1 | 1 | | | | |
| 15 | 93210–37160 | .O-RING<br>.JOINT TORIQUE | 1 | 1 | | | | |
| 16 | 6E5–44315–A0 | .GASKET, WATER PUMP<br>.JOINT, POMPE A EAU | 1 | 1 | | | | |
| 17 | 93101–28M16 | .OIL SEAL<br>.JOINT SPY | 2 | 2 | | | | |
| 18 | 93210–55M14 | .O-RING<br>.JOINT TORIQUE | 1 | 1 | | | | |
| 19 | 93101–30M17 | .OIL SEAL<br>.JOINT SPY | 2 | 2 | | | | |
| 20 | 93210–97M55 | .O-RING<br>.JOINT TORIQUE | 1 | 1 | | | | |
| 21 | 61A–W0078–A4 | WATER PUMP REPAIR KIT<br>KIT DE REPARATION DE LA POMPE | 1 | 1 | | | | |
| 22 | 61A–44322–02 | .INSERT, CARTRIDGE<br>.CUVETTE | 1 | 1 | | | | |
| 23 | 93210–86M38 | .O-RING<br>.JOINT TORIQUE | 1 | 1 | | | | |
| 24 | 93210–37160 | .O-RING<br>.JOINT TORIQUE | 1 | 1 | | | | |
| 25 | 6E5–44352–01 | .IMPELLER<br>.TURBINE | 1 | 1 | | | | |
| 26 | 6G5–44323–01 | .OUTER PLATE, CARTRIDGE<br>.PLAQUE EXTERIEURE | 1 | 1 | | | | |
| 27 | 6E5–44315–A0 | .GASKET, WATER PUMP<br>.JOINT, POMPE A EAU | 1 | 1 | | | | |

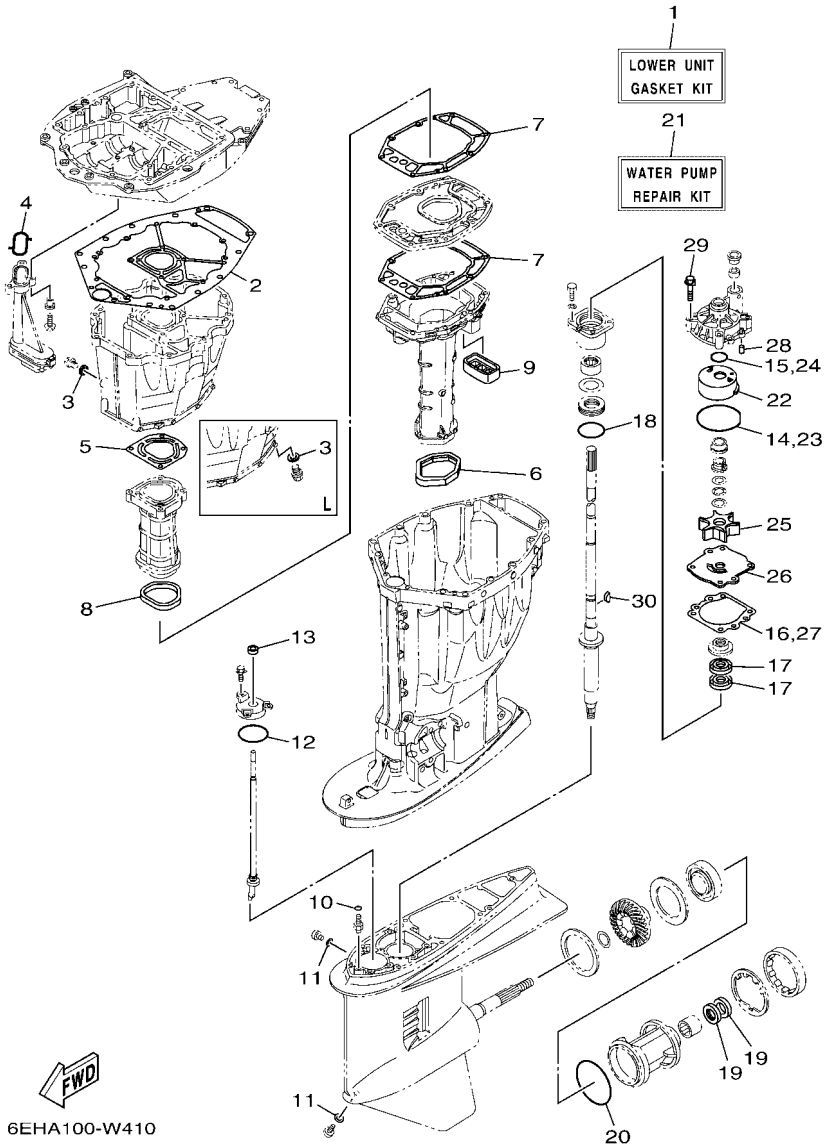


## FIG. 42 REPAIR KIT 2 — KITS DE REPARATION 2

| REF. NO. | PART NO. N° PIECES | DESCRIPTION DESCRIPTION | 6DAB | 6DBB | | | | REMARKS REMARQUES |
|---|---|---|---|---|---|---|---|---|
| 28 | 93606–12019 | .PIN, DOWEL<br>.GOUPILLE | 2 | 2 | | | | |
| 29 | 90119–08191 | .BOLT, WITH WASHER<br>.BOULON, AVEC RONDELLE | 4 | 4 | | | | |
| 30 | 90280–04M05 | .KEY, WOODRUFF<br>.CLAVETTE, DEMI-LUNE | 1 | 1 | | | | |

| PART NO. N° PIECES | REF. NO. |
|---|---|
| 6DA–11110–02–9S | 5 – 2 |
| 6DA–11133–10 | 5 – 3 |
| 6DA–11181–00 | 5 – 17 |
| | 41 – 3 |
| 6DA–11191–00 | 5 – 22 |
| 6DA–11193–00 | 5 – 23 |
| | 41 – 4 |
| 6G8–11197–A0 | 6 – 4 |
| 67F–11301–01 | 5 – 11 |
| 69J–11301–01 | 6 – 18 |
| 68T–11325–00 | 1 – 3 |
| | 6 – 5 |
| 6E5–11325–00 | 1 – 2 |
| | 1 – 6 |
| | 3 – 8 |
| | 3 – 29 |
| 67F–11325–01 | 1 – 1 |
| | 1 – 4 |
| | 5 – 12 |
| | 6 – 19 |
| 67F–11328–01 | 5 – 13 |
| | 6 – 20 |
| 63P–11351–03 | 3 – 19 |
| | 41 – 16 |
| 6CB–11355–00 | 32 – 16 |
| | 41 – 21 |
| 6G5–11372–00 | 6 – 14 |
| 6DA–11381–01 | 6 – 25 |
| | 41 – 14 |
| 60V–11382–A0 | 6 – 16 |
| | 41 – 13 |
| 6DA–11410–00 | 4 – 1 |
| 6DA–11416–00 | 4 – 5 |
| 6DA–11416–10 | 4 – 5 |
| 6DA–11416–20 | 4 – 5 |
| 6DA–11417–00 | 4 – 6 |
| 6DA–11417–10 | 4 – 6 |
| 6DA–11417–20 | 4 – 6 |
| 6DA–11426–00 | 4 – 7 |
| 6DA–11427–00 | 4 – 8 |
| 6CB–11478–00 | 4 – 2 |
| 6DA–11500–00 | 3 – 20 |
| 63P–11512–00 | 3 – 23 |
| 6DA–11590–00 | 8 – 21 |
| 6DA–11595–00 | 8 – 24 |
| 6FA–115A0–00 | 8 – 13 |
| 6CB–11603–00 | 4 – 12 |
| 6DA–11631–21–94 | 4 – 11 |

| PART NO. N° PIECES | REF. NO. |
|---|---|
| 6CB–11633–00 | 4 – 13 |
| 63P–11654–10 | 4 – 10 |
| 6JD–11656–00 | 4 – 15 |
| 6JD–11656–10 | 4 – 15 |
| 6JD–11656–20 | 4 – 15 |
| 6DA–11998–00 | 25 – 21 |
| 6DA–11999–00 | 25 – 23 |
| 6CB–12111–00 | 8 – 1 |
| 6CB–12113–00 | 8 – 4 |
| 51Y–12119–00 | 8 – 7 |
| 6DA–12121–00 | 8 – 2 |
| 6DA–12171–01 | 8 – 9 |
| 6DA–12181–01 | 8 – 11 |
| 6DA–12411–01 | 1 – 5 |
| | 6 – 28 |
| 6AW–12412–00 | 6 – 29 |
| 6DA–12413–A0–9S | 6 – 30 |
| 60H–12416–00 | 6 – 11 |
| 6DA–1241B–A0–9S | 6 – 50 |
| 6CB–1242F–00 | 6 – 2 |
| | 41 – 5 |
| 6DA–1243A–00 | 6 – 15 |
| 6DA–1243E–00 | 6 – 31 |
| 6DA–1244H–00 | 6 – 33 |
| 6DA–12491–00 | 6 – 37 |
| 6DA–12527–00–9S | 6 – 24 |
| 6DA–12552–00 | 7 – 13 |
| 6AW–12572–00 | 25 – 4 |
| 6DA–12576–00 | 7 – 1 |
| | 11 – 6 |
| 6DA–12578–00 | 7 – 6 |
| 6DA–12579–00 | 7 – 11 |
| 6R3–12581–00 | 25 – 5 |
| 6AW–12582–00 | 25 – 6 |
| 6R3–12583–00 | 25 – 7 |
| 6DA–12589–00 | 7 – 2 |
| | 7 – 15 |
| 6P2–12615–00 | 8 – 18 |
| 6P2–12623–00 | 8 – 16 |
| 6P2–12645–22 | 8 – 15 |
| 6P2–12663–00 | 8 – 17 |
| 6S5–12858–00 | 6 – 41 |
| 6CB–13016–00 | 1 – 10 |
| | 12 – 5 |
| 6AW–13119–00 | 32 – 14 |
| 6LH–13132–00 | 12 – 25 |
| 6DA–13152–00 | 9 – 3 |
| 6DA–13160–02 | 10 – 6 |

| PART NO. N° PIECES | REF. NO. |
|---|---|
| 6DA–13161–02 | 10 – 7 |
| 6DA–13300–00 | 32 – 12 |
| 6DA–13329–00 | 32 – 13 |
| 63P–13411–00 | 32 – 8 |
| 63P–13415–00 | 32 – 10 |
| | 42 – 4 |
| 63P–13437–63 | 16 – 27 |
| 69J–13440–04 | 1 – 8 |
| | 6 – 40 |
| 6DA–13446–01 | 6 – 42 |
| 6DA–13475–00 | 6 – 43 |
| | 41 – 23 |
| 63P–13490–00 | 3 – 31 |
| 6DA–13532–00 | 11 – 1 |
| 6DA–13545–00 | 11 – 18 |
| 68V–13546–10 | 11 – 20 |
| 6DA–13547–00 | 11 – 23 |
| 6DA–13548–00 | 11 – 21 |
| 6DA–13564–01 | 10 – 4 |
| 6AW–13577–10 | 10 – 10 |
| 6CB–13593–00 | 12 – 21 |
| | 26 – 37 |
| 69J–13631–00 | 32 – 15 |
| 6DA–13641–00 | 9 – 11 |
| 6DA–13645–00 | 9 – 13 |
| 6DA–13646–00 | 9 – 12 |
| 63P–13716–00 | 12 – 20 |
| 69J–13716–00 | 26 – 36 |
| 6LH–13716–00 | 12 – 36 |
| 6DA–13751–01 | 9 – 1 |
| 6DA–13761–01 | 10 – 8 |
| 6LH–13781–00 | 12 – 29 |
| 6LH–13784–00 | 12 – 32 |
| 6DA–13881–00 | 9 – 19 |
| 6DA–13892–00 | 12 – 11 |
| 6DA–13893–00 | 12 – 12 |
| 6CB–13906–01 | 12 – 8 |
| 6LH–13915–00 | 1 – 11 |
| | 12 – 24 |
| 6LH–13938–00 | 12 – 37 |
| 6AW–1410B–00 | 10 – 9 |
| 6C5–14127–10 | 12 – 23 |
| 6FM–14137–00 | 12 – 39 |
| 6DA–14146–00 | 12 – 10 |
| 6P2–14149–00 | 12 – 35 |
| 6LH–14180–00 | 12 – 1 |
| 6LH–14181–00 | 12 – 14 |
| 6DA–14182–00 | 12 – 2 |

| PART NO. N° PIECES | REF. NO. |
|---|---|
| 6P2–14191–00 | 12 – 15 |
| 6CB–14216–00 | 12 – 6 |
| 6P2–14386–00 | 12 – 31 |
| 6P2–1441J–01 | 9 – 7 |
| 6DA–14440–00 | 9 – 5 |
| 6LH–1447B–00 | 12 – 28 |
| 6CB–14546–00 | 12 – 27 |
| 6CB–14564–00 | 12 – 9 |
| 63P–14567–00 | 12 – 19 |
| 6K8–14591–10 | 12 – 17 |
| 69J–14624–01 | 31 – 25 |
| 6DA–14664–00 | 41 – 9 |
| 6DA–14664–01 | 3 – 15 |
| 6DA–14711–01 | 31 – 12 |
| 6DA–14711–11 | 31 – 12 |
| 6DA–1475A–00 | 11 – 11 |
| 6DA–1475F–00 | 11 – 13 |
| 6DA–1475G–00 | 11 – 16 |
| 6CB–14984–00 | 1 – 12 |
| | 12 – 30 |
| 6CB–14985–00 | 12 – 26 |
| 6CB–14989–00 | 11 – 15 |
| 6DA–15109–01–9S | 3 – 2 |
| 6DA–15311–01 | 32 – 2 |
| 63P–15311–03 | 32 – 2 |
| 63P–15312–02 | 32 – 1 |
| | 42 – 2 |
| 63P–15316–01 | 32 – 5 |
| 6BB–15316–01 | 31 – 27 |
| 6DA–15319–00 | 6 – 47 |
| 6DA–15353–01 | 3 – 7 |
| | 41 – 6 |
| 6DA–15362–00 | 32 – 19 |
| 6G8–15363–00 | 6 – 45 |
| 6DA–15373–00 | 9 – 9 |
| 6DA–15377–00 | 32 – 20 |
| 6DA–15411–00–9S | 3 – 24 |
| 6DA–15414–00–9S | 3 – 4 |
| 6DA–15423–00–9S | 3 – 6 |
| 6DA–15451–01 | 3 – 25 |
| | 41 – 17 |
| 6DA–2134X–00 | 10 – 30 |
| 6E5–21744–00 | 11 – 22 |
| 6DA–2416A–00 | 11 – 14 |
| 6P2–24170–00 | 10 – 27 |
| 63P–2419A–01 | 10 – 28 |
| 6CB–24217–00 | 12 – 7 |
| 6DA–24310–01 | 13 – 2 |

| PART NO. N° PIECES | REF. NO. |
|---|---|
| 6DA–24313–00 | 14 – 19 |
| 6DA–24314–00 | 14 – 3 |
| 6DA–24317–00 | 13 – 12 |
| 6DA–24323–00 | 13 – 15 |
| 6DA–24324–10 | 13 – 8 |
| 6E5–24351–51 | 14 – 4 |
| 6AW–24360–02 | 15 – 1 |
| 6CE–24377–00 | 7 – 3 |
| | 11 – 7 |
| 6AW–24377–01 | 14 – 2 |
| 688–24378–00 | 11 – 19 |
| 6CE–24378–00 | 6 – 32 |
| 6E5–24378–00 | 13 – 11 |
| 69J–24379–00 | 12 – 13 |
| 6GR–24410–01 | 10 – 15 |
| 6DA–24425–00 | 10 – 13 |
| 6DA–24426–00 | 10 – 18 |
| 6EK–24452–00 | 12 – 16 |
| 4SV–24453–00 | 12 – 33 |
| 6CB–24460–00 | 12 – 4 |
| 6DA–24462–00 | 10 – 23 |
| 6P3–24469–00 | 14 – 11 |
| 6CB–24482–00 | 12 – 18 |
| 6DA–24491–00 | 10 – 17 |
| 6LH–24492–00 | 12 – 38 |
| 6DA–24492–01 | 10 – 16 |
| 6CB–24501–01 | 1 – 9 |
| | 12 – 3 |
| 6P3–24519–00 | 14 – 12 |
| 6P3–24560–04 | 14 – 8 |
| 6P3–24562–03 | 14 – 10 |
| 6P3–24563–02 | 1 – 13 |
| | 14 – 9 |
| 6P3–24564–00 | 1 – 14 |
| | 14 – 13 |
| 6DA–24566–00 | 14 – 14 |
| 6DA–24596–01 | 14 – 6 |
| 69J–28100–03 | 14 – 21 |
| 6CB–2812A–00 | 17 – 29 |
| 6DA–28199–79–D0 | 14 – 22 |
| 6DA–28199–79–E0 | 14 – 22 |
| 6DA–28199–79–F0 | 14 – 22 |
| 6DA–28199–79–G0 | 14 – 22 |
| 6DA–28199–79–H0 | 14 – 22 |
| 6DA–28199–79–S0 | 14 – 22 |
| 6DA–28199–89–K0 | 14 – 23 |
| 6DA–28199–89–L0 | 14 – 23 |
| 6DA–28199–89–M0 | 14 – 23 |

| PART NO. N° PIECES | REF. NO. |
|---|---|
| 6DA–28199–89–N0 | 14 – 23 |
| 6DA–28199–89–P0 | 14 – 23 |
| 6DA–28199–89–R0 | 14 – 23 |
| 6DA–41113–00–9S | 6 – 8 |
| 6DA–41114–01 | 6 – 9 |
| | 41 – 12 |
| 63P–41131–02 | 31 – 9 |
| 63P–41133–A0 | 31 – 10 |
| | 42 – 5 |
| 63P–41134–A1 | 31 – 16 |
| | 42 – 7 |
| 63P–41137–06 | 31 – 1 |
| 63P–41138–00 | 31 – 18 |
| | 42 – 8 |
| 6BG–42384–00 | 25 – 2 |
| 6DA–42384–00 | 23 – 23 |
| 6DA–42510–00–8D | 28 – 8 |
| 6DA–42510–10–8D | 28 – 8 |
| 6DA–42541–00 | 25 – 8 |
| 6DA–42610–03 | 2 – 1 |
| 6DA–42615–00 | 23 – 5 |
| 6DA–42617–00 | 16 – 26 |
| 6DA–4261A–03 | 2 – 2 |
| 6CB–42647–A0 | 2 – 3 |
| 6DA–42662–01 | 3 – 33 |
| 6CB–42662–02 | 25 – 25 |
| 6AW–42663–01 | 2 – 9 |
| 6DA–42675–00 | 2 – 14 |
| 6DA–42676–00 | 2 – 15 |
| 6DA–42677–00 | 2 – 16 |
| 6DA–42678–00 | 2 – 13 |
| 63P–42681–20 | 2 – 17 |
| 6DA–42697–00 | 2 – 12 |
| 6DA–42710–00–8D | 23 – 1 |
| 648–42715–00 | 26 – 28 |
| 63P–42716–01 | 23 – 6 |
| 6DA–42717–01 | 23 – 22 |
| 69J–42723–01 | 20 – 13 |
| 6E5–42724–01 | 31 – 7 |
| 6DA–42725–03 | 23 – 2 |
| 6H1–42726–22 | 25 – 1 |
| 6KA–42727–00 | 23 – 26 |
| 6DA–42740–01 | 24 – 1 |
| 6DA–42741–11–8D | 24 – 1 |
| 6DA–42744–00 | 3 – 32 |
| 6BG–42748–01 | 16 – 16 |
| 6H4–42748–01 | 23 – 24 |
| 68F–42753–00 | 23 – 30 |

| PART NO. N° PIECES | REF. NO. |
|---|---|
| 63P–42756–00 | 25 – 12 |
| 6CB–42761–00 | 23 – 3 |
| 6DA–42769–01 | 31 – 8 |
| 6DA–42770–01 | 24 – 2 |
| 6EE–42794–40 | 23 – 32 |
| 6EE–42794–50 | 23 – 33 |
| 6DA–42815–01–8D | 23 – 7 |
| 6DA–42816–02–8D | 23 – 8 |
| 6DA–42817–02–8D | 23 – 9 |
| 6CB–42818–00 | 23 – 13 |
| 6CB–42819–00 | 23 – 14 |
| 64E–43111–02–8D | 27 – 1 |
| 64E–43112–02–8D | 27 – 7 |
| 64E–43126–10 | 27 – 35 |
| 64E–43131–30 | 27 – 11 |
| 64E–43139–11 | 28 – 1 |
| 66T–43144–00 | 23 – 17 |
| 6G5–43144–00 | 27 – 25 |
| 6E5–43145–01 | 37 – 8 |
| 6G5–43148–00 | 27 – 30 |
| 6G5–43181–02 | 27 – 27 |
| 6G5–43185–02 | 27 – 28 |
| 64E–43311–10–8D | 27 – 21 |
| 64E–43311–20–8D | 27 – 21 |
| 63P–43338–10 | 29 – 54 |
| 61A–43376–00 | 28 – 6 |
| 63P–43800–23 | 29 – 1 |
| 63P–43801–10 | 29 – 4 |
| 63P–43802–21 | 29 – 37 |
| 6EK–43804–11 | 30 – 3 |
| 6EK–43805–01 | 30 – 2 |
| 6EK–4380F–00 | 30 – 6 |
| 63P–4380L–23 | 29 – 2 |
| 63P–4380P–20 | 29 – 9 |
| 63P–43810–21 | 29 – 3 |
| 63P–43811–20 | 29 – 6 |
| 63P–43812–20 | 29 – 23 |
| 63P–43814–20 | 29 – 13 |
| 6CJ–43816–00 | 29 – 61 |
| 63P–43816–10 | 29 – 20 |
| 6BC–43818–00 | 27 – 19 |
| 63P–4381C–20 | 29 – 41 |
| 63P–4381J–10 | 29 – 62 |
| 63P–43820–20 | 29 – 26 |
| 63P–43821–21 | 29 – 25 |
| 6CJ–43829–10 | 29 – 17 |
| 63P–4382A–10 | 29 – 31 |
| 63P–4382C–20 | 29 – 15 |

| PART NO. N° PIECES | REF. NO. |
|---|---|
| 63P–43830–20 | 29 – 42 |
| 69J–43831–00 | 29 – 66 |
| 6H1–43841–11 | 29 – 18 |
| 63P–43843–10 | 29 – 53 |
| 6H1–43844–10 | 29 – 45 |
| 63P–43844–20 | 29 – 51 |
| 63P–43845–20 | 29 – 34 |
| 63P–43847–10 | 29 – 29 |
| 6H1–4384G–11 | 29 – 44 |
| 63P–4384G–20 | 29 – 55 |
| 63P–4384H–10 | 29 – 32 |
| 63P–43851–20 | 29 – 48 |
| 63P–43854–10 | 29 – 30 |
| 69J–43855–00 | 29 – 52 |
| 6H1–43856–10 | 29 – 46 |
| 63P–43857–10 | 29 – 59 |
| 63P–4385H–10 | 29 – 60 |
| 6CJ–43861–10 | 29 – 68 |
| 63P–43861–20 | 29 – 7 |
| 6H1–43862–00 | 29 – 10 |
| | 29 – 12 |
| 6EK–43862–01 | 30 – 12 |
| 63P–43862–10 | 29 – 24 |
| 6D8–43863–00 | 29 – 22 |
| 63P–43863–10 | 29 – 8 |
| 6H1–43866–01 | 29 – 39 |
| 62X–4386K–00 | 30 – 7 |
| 62X–43871–00 | 29 – 27 |
| 61A–43876–01 | 29 – 36 |
| 63P–43876–10 | 29 – 19 |
| 61A–43878–00 | 29 – 65 |
| 63P–43879–10 | 30 – 8 |
| 6KW–43880–01 | 30 – 1 |
| 63P–43881–22 | 30 – 10 |
| 6EK–43882–00 | 30 – 11 |
| 6EK–43892–00 | 30 – 4 |
| 69J–4389J–00 | 29 – 33 |
| 63P–44117–01 | 26 – 8 |
| 63P–44118–00 | 26 – 23 |
| 6DA–44120–02 | 26 – 18 |
| 6DA–44120–12 | 26 – 18 |
| 6DA–44121–00 | 26 – 16 |
| 63P–44122–00 | 26 – 13 |
| 63P–44150–01 | 33 – 18 |
| 64P–44150–01 | 35 – 19 |
| 6DA–44176–00 | 26 – 7 |
| 6DA–44194–00 | 28 – 35 |
| 61A–44311–01 | 33 – 24 |

| PART NO. N° PIECES | REF. NO. |
|---|---|
| 61A–44311–01 | 35 – 25 |
| 6E5–44312–00 | 33 – 29 |
| | 35 – 30 |
| 6E5–44315–A0 | 33 – 33 |
| | 35 – 34 |
| | 42 – 16 |
| | 42 – 27 |
| 61A–44322–02 | 33 – 25 |
| | 35 – 26 |
| | 42 – 22 |
| 6G5–44323–01 | 33 – 32 |
| | 35 – 33 |
| | 42 – 26 |
| 6E5–44352–01 | 33 – 30 |
| | 35 – 31 |
| | 42 – 25 |
| 6DA–44361–00 | 34 – 1 |
| | 36 – 1 |
| 6DA–44361–10 | 34 – 1 |
| 6E5–44365–01 | 33 – 28 |
| | 34 – 3 |
| | 35 – 29 |
| | 36 – 2 |
| 6E5–44366–01 | 31 – 30 |
| 6P2–44391–00 | 23 – 25 |
| 63P–44511–00 | 28 – 37 |
| 6DA–44514–00 | 28 – 28 |
| 6DA–44526–00 | 28 – 32 |
| 6G5–44526–00 | 27 – 3 |
| 6DA–44532–00 | 28 – 33 |
| 69J–44533–00 | 28 – 22 |
| 68V–44551–00–8D | 28 – 13 |
| 6DA–44551–00–CA | 28 – 13 |
| 6DA–44552–00–CA | 28 – 25 |
| 63P–44553–00–8D | 28 – 25 |
| 60V–44555–00 | 28 – 16 |
| 63P–44555–00 | 28 – 16 |
| 63P–44556–00–8D | 28 – 26 |
| 6DA–44575–00 | 28 – 15 |
| 61A–44575–01 | 28 – 15 |
| 6DA–45111–01–8D | 31 – 20 |
| 6DA–45111–10–8D | 31 – 20 |
| 69J–45123–00 | 31 – 13 |
| | 42 – 6 |
| 69J–45127–01 | 31 – 19 |
| | 42 – 9 |
| 6BB–45152–01 | 31 – 28 |
| 6C5–45155–01 | 31 – 31 |

| PART NO. N° PIECES | REF. NO. |
|---|---|
| 6DA–45155–01 | 31 – 31 |
| 63P–45181–02 | 31 – 17 |
| 6J9–45214–00 | 34 – 8 |
| | 36 – 7 |
| 6J9–45215–00 | 34 – 9 |
| | 36 – 8 |
| 6AW–45251–00 | 1 – 15 |
| | 27 – 2 |
| 6DA–45300–03–8D | 33 – 1 |
| 6DA–45300–14–8D | 33 – 1 |
| 6DB–45300–15–8D | 35 – 1 |
| 6J9–45301–07–8D | 33 – 2 |
| | 35 – 2 |
| 6E5–45318–00 | 31 – 23 |
| 6E5–45321–00 | 33 – 14 |
| | 35 – 15 |
| 6E5–45331–00–9S | 33 – 36 |
| | 35 – 37 |
| 6J9–45332–00–CA | 33 – 57 |
| 6K1–45332–01–CA | 35 – 59 |
| 688–45341–10 | 33 – 7 |
| | 35 – 8 |
| 6E5–45344–00 | 33 – 42 |
| | 35 – 43 |
| 6J9–45371–01 | 1 – 17 |
| | 34 – 12 |
| 6K1–45371–02 | 1 – 17 |
| | 36 – 11 |
| 688–45375–00 | 33 – 11 |
| | 35 – 12 |
| 663–45376–00 | 33 – 10 |
| | 35 – 11 |
| 63P–45378–00 | 33 – 12 |
| | 35 – 13 |
| 63P–45379–00 | 31 – 35 |
| 6G5–45383–01 | 33 – 67 |
| | 35 – 70 |
| 6G5–45384–02 | 33 – 68 |
| | 35 – 71 |
| 63P–45501–01 | 33 – 44 |
| 6DA–45501–10 | 33 – 44 |
| | 35 – 45 |
| 61A–45527–00 | 33 – 23 |
| | 35 – 24 |
| 6G5–45536–01 | 33 – 9 |
| | 35 – 10 |
| 61A–45538–00 | 33 – 20 |
| | 35 – 21 |

| PART NO. N° PIECES | REF. NO. |
|---|---|
| 6DA–45551–00 | 33 – 45 |
| | 35 – 46 |
| 6DA–45560–00 | 33 – 47 |
| 6DB–45560–00 | 35 – 48 |
| 6G5–45567–01 | 33 – 5 |
| | 35 – 6 |
| 6G5–45567–10 | 33 – 5 |
| | 35 – 6 |
| 6G5–45567–20 | 33 – 5 |
| | 35 – 6 |
| 6G5–45567–30 | 33 – 5 |
| | 35 – 6 |
| 6G5–45567–40 | 33 – 5 |
| | 35 – 6 |
| 6G5–45567–50 | 33 – 5 |
| | 35 – 6 |
| 6G5–45567–60 | 33 – 5 |
| | 35 – 6 |
| 6DB–45570–01 | 35 – 61 |
| 6DA–45571–00 | 33 – 59 |
| 6K1–45576–00 | 35 – 62 |
| 6G5–45576–10 | 33 – 60 |
| 6G5–45577–02 | 33 – 64 |
| | 35 – 68 |
| 6G5–45577–10 | 33 – 64 |
| | 35 – 68 |
| 6G5–45577–20 | 33 – 64 |
| | 35 – 68 |
| 6G5–45577–30 | 33 – 64 |
| | 35 – 68 |
| 6G5–45577–40 | 33 – 64 |
| | 35 – 68 |
| 6G5–45577–50 | 33 – 64 |
| | 35 – 68 |
| 6G5–45577–60 | 33 – 64 |
| | 35 – 68 |
| 6K1–45578–01 | 35 – 64 |
| 6K1–45578–10 | 35 – 64 |
| 6K1–45578–20 | 35 – 64 |
| 6K1–45578–30 | 35 – 64 |
| 6K1–45578–40 | 35 – 64 |
| 6K1–45578–50 | 35 – 64 |
| 6K1–45578–60 | 35 – 64 |
| 6E5–45587–01 | 33 – 39 |
| | 35 – 40 |
| 6E5–45587–10 | 33 – 39 |
| | 35 – 40 |
| 6E5–45587–20 | 33 – 39 |

| PART NO. N° PIECES | REF. NO. |
|---|---|
| 6E5–45587–20 | 35 – 40 |
| 6E5–45587–30 | 33 – 39 |
| | 35 – 40 |
| 6E5–45587–40 | 33 – 39 |
| | 35 – 40 |
| 6E5–45587–50 | 33 – 39 |
| | 35 – 40 |
| 6E5–45587–60 | 33 – 39 |
| | 35 – 40 |
| 6J9–45611–01 | 33 – 48 |
| 6K1–45611–11 | 35 – 50 |
| 6DA–45631–01 | 33 – 55 |
| | 35 – 57 |
| 6E5–45633–01 | 33 – 56 |
| | 35 – 58 |
| 6E5–45634–02 | 33 – 49 |
| | 35 – 51 |
| 68F–45970–20 | 34 – 19 |
| 68G–45970–20 | 36 – 18 |
| 68F–45972–20 | 34 – 19 |
| 68G–45972–20 | 36 – 18 |
| 68F–45974–20 | 34 – 19 |
| 68G–45974–20 | 36 – 18 |
| 68F–45976–20 | 34 – 19 |
| 68G–45976–20 | 36 – 18 |
| 68F–45978–20 | 34 – 19 |
| 68G–45978–20 | 36 – 18 |
| 63P–45987–00 | 34 – 14 |
| | 36 – 13 |
| 688–45997–01 | 34 – 15 |
| | 36 – 14 |
| 6CE–45C81–10 | 34 – 20 |
| | 36 – 19 |
| 6Y8–48277–00 | 39 – 16 |
| 6E5–48344–00 | 26 – 5 |
| | 26 – 39 |
| 6DA–48531–00 | 26 – 1 |
| 6E5–48538–00 | 26 – 3 |
| 6E5–61301–01 | 38 – 1 |
| 6E5–61303–01 | 38 – 5 |
| 6E5–61311–11 | 38 – 3 |
| 6E5–61313–00 | 38 – 2 |
| 6E5–61315–00 | 38 – 4 |
| 6E5–61350–02 | 37 – 1 |
| 6E5–61351–01 | 37 – 2 |
| 6E5–61355–00 | 37 – 5 |
| 6H5–81315–00 | 39 – 17 |
| 6DA–8132G–01 | 16 – 19 |

NUMERICAL INDEX
INDEX NUMERIQUE

| PART NO. N° PIECES | REF. NO. |
|---|---|
| 6DA–81337–01 | 16 – 12 |
| 6DA–81410–00 | 16 – 3 |
| 6DA–81639–01 | 17 – 18 |
| 6CB–81800–02 | 22 – 1 |
| 69J–81801–11 | 22 – 5 |
| 6CB–81807–00 | 22 – 8 |
| 6CB–81809–00 | 22 – 14 |
| 67F–81810–00 | 22 – 3 |
| 67F–81813–00 | 22 – 6 |
| 6CB–81820–00 | 22 – 7 |
| 67F–81821–00 | 22 – 11 |
| 6DA–81822–00 | 21 – 6 |
| 6CB–81826–00 | 22 – 22 |
| 69J–81828–00 | 22 – 23 |
| 67F–81830–00 | 22 – 16 |
| 6CB–81832–00 | 22 – 9 |
| 6CB–81836–00 | 22 – 10 |
| 6C5–81839–00 | 22 – 19 |
| 67F–8183R–00 | 22 – 13 |
| 60V–8183T–00 | 22 – 17 |
| 6P2–8183X–00 | 18 – 5 |
| 69J–81840–11 | 22 – 4 |
| 67F–81841–00 | 22 – 12 |
| 6CB–81842–00 | 22 – 18 |
| 67F–81846–00 | 22 – 24 |
| 67F–81850–00 | 22 – 2 |
| 6C5–81869–00 | 22 – 21 |
| 67F–81891–00 | 22 – 15 |
| 6DA–81919–11 | 17 – 35 |
| 60V–81925–00 | 21 – 4 |
| 6C5–81941–01 | 22 – 20 |
| 6DA–81942–01 | 18 – 11 |
| 6DA–81948–01 | 17 – 5 |
| 69J–81949–03 | 20 – 21 |
| 63P–81950–00 | 18 – 4 |
| 6DA–81952–10 | 17 – 11 |
| 6DA–81960–10 | 18 – 1 |
| 6DA–81975–01 | 18 – 2 |
| 6EE–81994–40 | 16 – 28 |
| 6EE–81994–50 | 16 – 29 |
| 6AH–81996–00 | 23 – 34 |
| 6DA–82105–02 | 18 – 22 |
| 6P2–82113–00 | 17 – 30 |
| 6E5–82148–00 | 27 – 5 |
| | 27 – 8 |
| 66K–82149–00 | 27 – 24 |
| 6DA–82149–00 | 27 – 24 |
| 6CB–82151–00 | 17 – 24 |

| PART NO. N° PIECES | REF. NO. |
|---|---|
| 6CB–82151–10 | 17 – 25 |
| 6CB–82151–20 | 17 – 26 |
| 6CB–82151–30 | 17 – 27 |
| 6CB–82151–41 | 17 – 23 |
| 6DA–82170–11 | 17 – 22 |
| 63P–82181–20 | 30 – 5 |
| 6CB–82310–02 | 19 – 5 |
| 6DA–82314–01 | 19 – 7 |
| 6A0–82317–01 | 16 – 15 |
| 6DA–82388–00 | 18 – 16 |
| | 21 – 9 |
| 6DA–82389–00 | 18 – 17 |
| 6D8–82389–01 | 19 – 1 |
| 6DA–82398–01 | 16 – 23 |
| 6Y8–82509–10 | 39 – 8 |
| 6Y8–82521–11 | 39 – 15 |
| 6DA–8252U–01 | 17 – 20 |
| 6DA–82553–00 | 20 – 9 |
| 6P2–82560–01 | 18 – 13 |
| 69J–82563–01 | 20 – 12 |
| 6DA–8257V–00 | 17 – 32 |
| 68F–82582–00 | 21 – 5 |
| 6DA–82582–00 | 20 – 2 |
| 6DA–82582–10 | 20 – 3 |
| 6Y8–82582–11 | 20 – 4 |
| 69J–82587–01 | 20 – 14 |
| 6E9–82588–00 | 18 – 14 |
| 61A–82588–01 | 26 – 10 |
| 6DA–82590–22 | 20 – 1 |
| 69J–8259F–00 | 26 – 9 |
| 60V–8259F–01 | 26 – 31 |
| 6DA–8259M–10 | 20 – 8 |
| 63P–825E0–02 | 40 – 1 |
| 6X4–83383–00 | 39 – 5 |
| 6X4–83386–00 | 39 – 6 |
| 6E5–83558–00 | 31 – 32 |
| 6DA–83614–00 | 20 – 16 |
| 63P–83614–01 | 20 – 15 |
| 6AW–83651–01 | 20 – 11 |
| 6DA–8366G–00 | 25 – 15 |
| 67H–83672–02 | 28 – 3 |
| 68F–83688–10 | 9 – 15 |
| 6Y8–8454G–00 | 39 – 11 |
| 6P2–85075–00 | 19 – 10 |
| 68F–85119–00 | 17 – 9 |
| | 17 – 14 |
| 60V–85516–00 | 10 – 21 |
| 68F–85516–01 | 17 – 7 |

| PART NO. N° PIECES | REF. NO. |
|---|---|
| 68F–85516–01 | 17 – 12 |
| 6CB–85544–10 | 17 – 28 |
| 689–85547–01 | 14 – 1 |
| 6DA–85548–10 | 17 – 15 |
| 6DA–85561–00 | 16 – 6 |
| 6CB–85580–00 | 16 – 5 |
| 6CJ–85780–01 | 20 – 18 |
| 6CB–85790–00 | 20 – 10 |
| 6P2–85896–00 | 19 – 9 |
| 6DA–8591A–11 | 17 – 1 |
| 6DA–85991–01 | 17 – 3 |
| 6C5–86120–00 | 10 – 31 |
| 6CB–86120–00 | 6 – 1 |
| 6Y8–86260–03 | 39 – 2 |
| 6AA–86261–01 | 39 – 3 |
| 6Y8–86267–00 | 39 – 1 |
| 6LH–87226–00 | 12 – 40 |
| 6DA–8A410–02 | 26 – 35 |
| K0F–A3233–00 | 4 – 14 |
| K0F–A3741–00 | 8 – 5 |
| K0F–A3742–00 | 8 – 6 |
| K0F–A3743–00 | 8 – 3 |
| K0F–A3751–00 | 8 – 8 |
| K0F–A3751–10 | 8 – 8 |
| K0F–A3751–20 | 8 – 8 |
| K0F–A3751–30 | 8 – 8 |
| K0F–A3751–40 | 8 – 8 |
| K0F–A3751–50 | 8 – 8 |
| K0F–A3751–60 | 8 – 8 |
| K0F–A3751–70 | 8 – 8 |
| K0F–A3751–80 | 8 – 8 |
| K0F–A3751–90 | 8 – 8 |
| K0F–A3751–A0 | 8 – 8 |
| K0F–A3751–B0 | 8 – 8 |
| K0F–A3751–C0 | 8 – 8 |
| K0F–A3751–D0 | 8 – 8 |
| K0F–A3751–E0 | 8 – 8 |
| K0F–A3751–F0 | 8 – 8 |
| K0F–A3751–G0 | 8 – 8 |
| K0F–A3751–H0 | 8 – 8 |
| K0F–A3751–J0 | 8 – 8 |
| K0F–A3751–K0 | 8 – 8 |
| K0F–A3751–L0 | 8 – 8 |
| K0F–A3751–M0 | 8 – 8 |
| K0F–A3751–N0 | 8 – 8 |
| K0F–A3751–P0 | 8 – 8 |
| K0F–A3751–R0 | 8 – 8 |
| K0F–A3751–S0 | 8 – 8 |

| PART NO. N° PIECES | REF. NO. |
|---|---|
| K0F–A3751–T0 | 8 – 8 |
| K0F–A3753–00 | 8 – 8 |
| K0F–A3753–10 | 8 – 8 |
| K0F–A3753–20 | 8 – 8 |
| K0F–A3753–30 | 8 – 8 |
| K0F–A3753–40 | 8 – 8 |
| K0F–A3753–50 | 8 – 8 |
| K0F–A3753–60 | 8 – 8 |
| K0F–A3753–70 | 8 – 8 |
| 6DA–W0001–01 | 41 – 1 |
| 63P–W0001–22 | 42 – 1 |
| 61A–W0078–A4 | 1 – 19 |
| | 42 – 21 |
| 6DA–W009A–03–9S | 5 – 1 |
| 6DA–W009B–13–9S | 3 – 1 |
| 6CB–W1165–10 | 4 – 9 |
| 6LH–W1390–00 | 12 – 22 |
| 6DA–W4624–00 | 8 – 20 |
| 6DA–W8145–00 | 16 – 1 |
| 6EK–W9010–00 | 16 – 2 |
| 90101–09M70 | 38 – 9 |
| 90101–12065 | 27 – 40 |
| | 27 – 40 |
| 90101–12066 | 27 – 40 |
| 90101–14005 | 28 – 21 |
| 90105–06028 | 3 – 5 |
| | 6 – 10 |
| | 6 – 26 |
| | 6 – 34 |
| 90105–06035 | 6 – 3 |
| 90105–06037 | 6 – 49 |
| 90105–06054 | 10 – 3 |
| 90105–06151 | 5 – 21 |
| | 6 – 44 |
| 90105–06196 | 3 – 34 |
| 90105–06M07 | 5 – 14 |
| | 6 – 21 |
| 90105–06M08 | 10 – 11 |
| | 10 – 14 |
| 90105–08175 | 3 – 22 |
| | 5 – 20 |
| 90105–08M87 | 21 – 8 |
| 90105–10406 | 3 – 17 |
| | 3 – 21 |
| 90105–10M00 | 34 – 13 |
| | 36 – 12 |
| 90105–14009 | 28 – 30 |
| 90105–14012 | 28 – 21 |

| PART NO. N° PIECES | REF. NO. |
|---|---|
| 90109–08019 | 26 – 33 |
| 90111–06142 | 24 – 4 |
| 90111–06144 | 24 – 3 |
| 90111–08078 | 2 – 4 |
| 90119–06078 | 6 – 39 |
| 90119–06276 | 3 – 14 |
| 90119–06286 | 33 – 17 |
| | 35 – 18 |
| 90119–06287 | 31 – 36 |
| 90119–06291 | 16 – 18 |
| 90119–06297 | 26 – 38 |
| 90119–06299 | 10 – 12 |
| 90119–06309 | 10 – 20 |
| | 10 – 35 |
| | 14 – 15 |
| 90119–06MA3 | 3 – 26 |
| | 6 – 17 |
| 90119–07001 | 5 – 7 |
| 90119–07234 | 5 – 8 |
| 90119–08020 | 9 – 14 |
| 90119–08182 | 31 – 2 |
| 90119–08187 | 23 – 21 |
| 90119–08189 | 31 – 5 |
| 90119–08191 | 33 – 35 |
| | 35 – 36 |
| | 42 – 29 |
| 90119–08M66 | 3 – 18 |
| 90119–10007 | 31 – 21 |
| 90119–10024 | 28 – 29 |
| 90119–10050 | 8 – 14 |
| 90119–10054 | 27 – 18 |
| 90119–10058 | 28 – 27 |
| 90119–10072 | 34 – 7 |
| | 36 – 6 |
| 90119–10M07 | 8 – 22 |
| 90149–11001 | 5 – 19 |
| 90151–05M05 | 6 – 6 |
| 90152–05M08 | 34 – 10 |
| | 36 – 9 |
| 90159–05059 | 28 – 2 |
| | 40 – 3 |
| 90159–06053 | 24 – 9 |
| 90159–06M28 | 24 – 3 |
| 90167–06M00 | 39 – 12 |
| 90169–05M00 | 17 – 21 |
| | 18 – 12 |
| 90170–09M05 | 38 – 10 |
| 90170–14M06 | 38 – 6 |

| PART NO. N° PIECES | REF. NO. |
|---|---|
| 90170–16M01 | 33 – 46 |
| | 35 – 47 |
| 90171–18M04 | 34 – 17 |
| | 36 – 16 |
| 90173–06001 | 24 – 7 |
| 90176–14002 | 28 – 23 |
| 90179–08003 | 21 – 3 |
| 90183–061A8 | 24 – 8 |
| 90185–05002 | 34 – 11 |
| | 36 – 10 |
| 90185–09M01 | 37 – 6 |
| | 38 – 11 |
| 90185–14M00 | 28 – 34 |
| 90185–22M11 | 27 – 15 |
| 90201–06M30 | 39 – 13 |
| 90201–10060 | 27 – 17 |
| 90201–10M20 | 37 – 7 |
| 90201–10M76 | 38 – 8 |
| 90201–12426 | 27 – 42 |
| 90201–13M01 | 27 – 41 |
| 90201–156J2 | 23 – 11 |
| 90201–15M58 | 28 – 20 |
| 90201–16M01 | 28 – 31 |
| 90201–16M55 | 28 – 19 |
| 90201–186F1 | 6 – 36 |
| | 41 – 15 |
| 90201–22M01 | 33 – 21 |
| | 35 – 22 |
| 90201–26015 | 35 – 49 |
| 90201–26M59 | 27 – 14 |
| 90201–30M92 | 33 – 65 |
| 90201–35008 | 28 – 17 |
| 90201–38M60 | 28 – 9 |
| 90202–08M20 | 26 – 14 |
| 90202–16061 | 26 – 21 |
| | 34 – 4 |
| | 36 – 3 |
| 90202–32M19 | 28 – 18 |
| 90202–40M47 | 28 – 12 |
| 90206–15M18 | 23 – 12 |
| 90206–22M19 | 33 – 22 |
| | 35 – 23 |
| 90249–06M19 | 27 – 31 |
| 90250–08M07 | 33 – 54 |
| | 35 – 56 |
| 90269–07003 | 23 – 27 |
| 90280–04M05 | 33 – 31 |
| | 35 – 32 |

NUMERICAL INDEX
INDEX NUMERIQUE


| PART NO. N° PIECES | REF. NO. |
|---|---|
| 90280–04M05 | 42 – 30 |
| 90282–04M00 | 33 – 66 |
| | 35 – 69 |
| 90338–25004 | 3 – 12 |
| 90340–08002 | 33 – 6 |
| | 35 – 7 |
| 90340–14M06 | 5 – 9 |
| | 32 – 6 |
| 90340–18M09 | 6 – 35 |
| 90344–51019 | 5 – 4 |
| 90386–06M12 | 26 – 17 |
| 90386–10M16 | 27 – 29 |
| 90386–12069 | 26 – 30 |
| 90386–15M73 | 23 – 10 |
| 90386–16M66 | 26 – 20 |
| 90386–22M98 | 27 – 20 |
| | 27 – 36 |
| 90386–25M31 | 27 – 13 |
| 90386–38M32 | 28 – 11 |
| 90387–05004 | 40 – 4 |
| 90387–06176 | 17 – 8 |
| | 17 – 13 |
| 90387–06263 | 32 – 9 |
| 90387–06283 | 10 – 1 |
| 90387–06289 | 10 – 22 |
| | 10 – 34 |
| | 14 – 17 |
| 90387–06M43 | 24 – 11 |
| 90387–06M69 | 16 – 17 |
| 90387–07028 | 24 – 6 |
| 90387–08M37 | 23 – 20 |
| 90387–08M45 | 2 – 7 |
| 90387–10094 | 2 – 5 |
| 90387–10M05 | 27 – 32 |
| 90387–10M61 | 37 – 3 |
| 90387–11005 | 5 – 18 |
| 90387–14004 | 28 – 38 |
| 90430–06M03 | 5 – 15 |
| | 6 – 22 |
| 90430–08003 | 1 – 16 |
| | 33 – 8 |
| | 35 – 9 |
| | 42 – 11 |
| 90430–14115 | 5 – 10 |
| | 41 – 2 |
| 90430–14M09 | 1 – 7 |
| | 32 – 7 |
| | 42 – 3 |

| PART NO. N° PIECES | REF. NO. |
|---|---|
| 90445–07018 | 31 – 34 |
| 90445–09008 | 7 – 4 |
| 90445–09120 | 11 – 3 |
| 90445–10056 | 11 – 8 |
| 90445–10057 | 7 – 14 |
| 90445–23002 | 34 – 2 |
| 90462–12013 | 25 – 19 |
| 90464–07M41 | 11 – 2 |
| 90464–09008 | 18 – 21 |
| 90464–09020 | 7 – 10 |
| 90464–09130 | 10 – 26 |
| | 16 – 21 |
| | 16 – 25 |
| 90464–09142 | 7 – 9 |
| 90464–09M21 | 7 – 5 |
| 90464–09M31 | 7 – 12 |
| 90464–10011 | 11 – 17 |
| 90464–11121 | 10 – 24 |
| 90464–12002 | 16 – 4 |
| 90464–12010 | 7 – 8 |
| | 13 – 3 |
| 90464–12089 | 18 – 9 |
| 90464–12183 | 9 – 10 |
| | 9 – 22 |
| | 17 – 6 |
| | 18 – 8 |
| 90464–13013 | 13 – 19 |
| 90464–13249 | 18 – 20 |
| | 19 – 4 |
| | 25 – 13 |
| 90464–13260 | 13 – 18 |
| 90464–15007 | 13 – 5 |
| 90464–16001 | 11 – 12 |
| | 11 – 25 |
| | 11 – 26 |
| 90464–16003 | 13 – 4 |
| 90464–18004 | 11 – 24 |
| | 13 – 17 |
| | 25 – 18 |
| | 25 – 18 |
| 90464–18246 | 18 – 10 |
| | 25 – 17 |
| 90464–20181 | 6 – 38 |
| | 9 – 21 |
| | 13 – 1 |
| | 16 – 22 |
| | 17 – 16 |
| | 18 – 19 |

| PART NO. N° PIECES | REF. NO. |
|---|---|
| 90464–20181 | 19 – 3 |
| | 21 – 10 |
| 90464–20258 | 23 – 31 |
| 90464–21256 | 25 – 9 |
| 90464–26001 | 20 – 19 |
| 90464–28003 | 20 – 20 |
| 90464–32002 | 17 – 34 |
| 90464–99004 | 9 – 8 |
| 90465–08M63 | 13 – 6 |
| | 27 – 22 |
| 90465–08M83 | 7 – 16 |
| 90465–11M10 | 7 – 7 |
| | 10 – 25 |
| | 11 – 4 |
| | 11 – 5 |
| | 11 – 9 |
| | 13 – 14 |
| | 13 – 16 |
| | 14 – 5 |
| | 14 – 20 |
| | 25 – 3 |
| | 25 – 10 |
| | 27 – 16 |
| | 28 – 5 |
| | 31 – 33 |
| | 39 – 10 |
| | 40 – 5 |
| 90465–11M59 | 6 – 27 |
| | 6 – 51 |
| | 20 – 7 |
| 90465–13M97 | 16 – 9 |
| 90467–09M09 | 11 – 10 |
| 90467–120A7 | 13 – 9 |
| 90467–140A9 | 13 – 10 |
| 90467–141A2 | 13 – 13 |
| 90468–18008 | 26 – 6 |
| | 26 – 15 |
| | 26 – 40 |
| 90480–12314 | 10 – 2 |
| | 16 – 14 |
| | 19 – 8 |
| 90480–13163 | 23 – 28 |
| 90480–13M24 | 24 – 10 |
| 90480–14031 | 10 – 33 |
| 90480–15013 | 14 – 16 |
| 90480–16009 | 24 – 5 |
| 90480–16025 | 16 – 13 |
| 90480–20M05 | 6 – 13 |

| PART NO. N° PIECES | REF. NO. |
|---|---|
| 90480–22M81 | 23 – 19 |
| 90501–12082 | 26 – 27 |
| 90501–16M11 | 6 – 12 |
| 90501–16M37 | 33 – 50 |
| | 35 – 52 |
| 90506–16003 | 27 – 34 |
| 90506–18025 | 8 – 23 |
| 90506–22001 | 23 – 16 |
| 90508–20M31 | 26 – 29 |
| 90560–12M01 | 37 – 4 |
| 91312–04020 | 29 – 57 |
| 91312–05035 | 29 – 63 |
| 91380–06025 | 29 – 67 |
| 91490–40030 | 34 – 18 |
| | 36 – 17 |
| 91609–16010 | 29 – 11 |
| 91690–30010 | 26 – 4 |
| | 26 – 25 |
| 91690–30020 | 27 – 33 |
| 91690–40010 | 3 – 10 |
| | 3 – 27 |
| 91809–08006 | 5 – 6 |
| 91814–18002 | 3 – 3 |
| 92903–08100 | 18 – 25 |
| 92990–06100 | 2 – 10 |
| 92990–08600 | 2 – 6 |
| 92990–18200 | 34 – 16 |
| | 36 – 15 |
| 92995–05100 | 9 – 17 |
| 92995–05600 | 9 – 18 |
| 92995–14600 | 28 – 24 |
| | 28 – 36 |
| 93101–28M16 | 33 – 37 |
| | 35 – 38 |
| | 42 – 17 |
| 93101–30M17 | 33 – 62 |
| | 35 – 66 |
| | 42 – 19 |
| 93102–38008 | 8 – 19 |
| | 41 – 20 |
| 93102–85008 | 4 – 4 |
| | 41 – 19 |
| 93106–09014 | 33 – 16 |
| | 35 – 17 |
| | 42 – 13 |
| 93106–19001 | 29 – 5 |
| 93210–04279 | 39 – 9 |
| 93210–064A5 | 29 – 40 |

| PART NO. N° PIECES | REF. NO. |
|---|---|
| 93210–064A5 | 29 – 50 |
| 93210–07003 | 33 – 13 |
| | 35 – 14 |
| | 42 – 10 |
| 93210–07N51 | 29 – 47 |
| 93210–08001 | 3 – 30 |
| | 41 – 18 |
| 93210–09165 | 26 – 19 |
| | 29 – 16 |
| 93210–11N52 | 29 – 21 |
| 93210–12327 | 29 – 35 |
| 93210–12648 | 3 – 16 |
| | 41 – 10 |
| 93210–12N52 | 29 – 38 |
| 93210–13M63 | 6 – 7 |
| | 23 – 29 |
| | 41 – 11 |
| 93210–16275 | 37 – 9 |
| 93210–19MJ3 | 32 – 21 |
| | 41 – 24 |
| 93210–24M79 | 6 – 46 |
| | 41 – 25 |
| 93210–25552 | 3 – 11 |
| | 32 – 18 |
| | 41 – 7 |
| | 41 – 22 |
| 93210–25647 | 3 – 13 |
| | 41 – 8 |
| 93210–29375 | 29 – 28 |
| 93210–357A3 | 6 – 48 |
| | 41 – 26 |
| 93210–37160 | 33 – 27 |
| | 35 – 28 |
| | 42 – 15 |
| | 42 – 24 |
| 93210–37MH7 | 28 – 10 |
| 93210–55M14 | 33 – 41 |
| | 35 – 42 |
| | 42 – 18 |
| 93210–58144 | 33 – 15 |
| | 35 – 16 |
| | 42 – 12 |
| 93210–68N50 | 29 – 14 |
| 93210–86M38 | 33 – 26 |
| | 35 – 27 |
| | 42 – 14 |
| | 42 – 23 |
| 93210–97M55 | 33 – 63 |

| PART NO. N° PIECES | REF. NO. |
|---|---|
| 93210–97M55 | 35 – 67 |
| | 42 – 20 |
| 93306–209U0 | 33 – 58 |
| 93311–928U5 | 33 – 3 |
| | 35 – 3 |
| 93315–43061 | 33 – 61 |
| | 35 – 65 |
| 93317–330U2 | 33 – 38 |
| | 35 – 39 |
| 93332–00048 | 35 – 60 |
| 93332–000V3 | 33 – 4 |
| 93341–440U5 | 35 – 63 |
| 93341–465U4 | 35 – 5 |
| 93341–930V2 | 33 – 40 |
| | 35 – 41 |
| 93390–000U2 | 35 – 4 |
| 93410–16006 | 26 – 22 |
| 93410–22M11 | 27 – 37 |
| 93410–37M04 | 28 – 14 |
| 93420–36M01 | 31 – 24 |
| 93501–04M02 | 26 – 26 |
| 93501–08001 | 29 – 49 |
| | 29 – 58 |
| 93503–16003 | 29 – 43 |
| | 33 – 53 |
| | 35 – 55 |
| 93505–32038 | 29 – 64 |
| 93507–32009 | 33 – 51 |
| | 35 – 53 |
| 93511–32017 | 33 – 52 |
| | 35 – 54 |
| 93604–10011 | 29 – 56 |
| 93605–10108 | 8 – 10 |
| | 8 – 12 |
| 93606–12019 | 4 – 3 |
| | 5 – 5 |
| | 33 – 34 |
| | 35 – 35 |
| | 42 – 28 |
| 93606–19M23 | 31 – 15 |
| 93608–16M16 | 31 – 4 |
| | 31 – 22 |
| | 32 – 4 |
| | 34 – 5 |
| | 36 – 4 |
| 93700–06002 | 27 – 10 |
| | 27 – 23 |
| 93700–06M01 | 26 – 32 |

NUMERICAL INDEX
INDEX NUMERIQUE

| PART NO. N° PIECES | REF. NO. |
|---|---|
| 93700–06M03 | 26 – 34 |
| 94702–00400 | 1 – 18 |
| | 5 – 25 |
| 95022–06035 | 16 – 10 |
| 95333–08600 | 18 – 24 |
| 95380–06600 | 2 – 11 |
| | 10 – 32 |
| | 24 – 4 |
| 95380–12600 | 27 – 43 |
| 95380–14700 | 38 – 7 |
| 95604–14200 | 28 – 23 |
| 95780–06300 | 39 – 14 |
| 95780–08300 | 2 – 8 |
| 95780–10300 | 28 – 7 |
| 95812–06025 | 32 – 11 |
| 95D75–06025 | 9 – 4 |
| | 9 – 6 |
| 95D75–08035 | 17 – 4 |
| 95D95–06010 | 13 – 7 |
| | 27 – 38 |
| | 27 – 39 |
| 95D95–06012 | 7 – 17 |
| | 9 – 20 |
| | 10 – 19 |
| | 14 – 18 |
| | 18 – 15 |
| | 19 – 2 |
| | 20 – 17 |
| | 23 – 18 |
| | 25 – 14 |
| | 25 – 16 |
| | 25 – 20 |
| 95D95–06014 | 23 – 4 |
| 95D95–06016 | 10 – 29 |
| | 16 – 20 |
| | 16 – 24 |
| | 17 – 10 |
| | 18 – 18 |
| | 21 – 11 |
| | 32 – 22 |
| 95D95–06020 | 10 – 5 |
| | 17 – 2 |
| | 17 – 19 |
| 95D95–06025 | 14 – 7 |
| | 19 – 6 |
| 95D95–06030 | 5 – 24 |
| | 16 – 11 |
| 95D95–06040 | 25 – 24 |

| PART NO. N° PIECES | REF. NO. |
|---|---|
| 95D95–06065 | 25 – 22 |
| 95D95–08012 | 23 – 15 |
| 95D95–08016 | 18 – 23 |
| 95D95–08020 | 26 – 2 |
| 95D95–08025 | 5 – 16 |
| 97513–08545 | 21 – 2 |
| 97595–05520 | 16 – 8 |
| 97602–04316 | 30 – 9 |
| 97780–50620 | 17 – 31 |
| 97780–60520 | 25 – 11 |
| 97780–60620 | 17 – 17 |
| | 17 – 33 |
| | 39 – 7 |
| 97880–06035 | 39 – 12 |
| 97885–05016 | 9 – 16 |
| 97980–06216 | 31 – 26 |
| | 39 – 4 |
| 97985–04116 | 26 – 11 |
| 97985–04308 | 20 – 6 |
| 97985–06212 | 27 – 9 |
| 97985–06216 | 28 – 4 |
| 97D95–06012 | 31 – 29 |
| 97E75–06516 | 8 – 25 |
| 97E75–06535 | 26 – 24 |
| 97E75–06540 | 32 – 17 |
| 97E75–08535 | 31 – 14 |
| | 32 – 3 |
| 97E75–08540 | 6 – 23 |
| 97E75–08560 | 9 – 2 |
| | 31 – 11 |
| 97E75–10535 | 31 – 6 |
| 97E75–10545 | 31 – 3 |
| 97E95–06510 | 27 – 6 |
| 97E95–06512 | 27 – 26 |
| 97E95–06516 | 20 – 5 |
| | 21 – 1 |
| | 40 – 2 |
| 97E95–06520 | 18 – 7 |
| | 19 – 11 |
| 97E95–06530 | 27 – 4 |
| 97E95–06535 | 18 – 3 |
| 97E95–06550 | 26 – 12 |
| 97E95–06610 | 18 – 6 |
| 97E95–08520 | 27 – 12 |
| 97E95–08525 | 33 – 43 |
| | 35 – 44 |
| 97E95–10645 | 34 – 6 |
| | 36 – 5 |

| PART NO. N° PIECES | REF. NO. |
|---|---|
| 98507–04008 | 12 – 34 |
| 98780–04016 | 3 – 9 |
| | 3 – 28 |
| 99001–08600 | 33 – 19 |
| | 35 – 20 |
| 99530–08012 | 16 – 7 |
| 99590–10114 | 21 – 7 |

| PART NO. N° PIECES | REF. NO. |
|---|---|

| PART NO. N° PIECES | REF. NO. |
|---|---|

| PART NO. N° PIECES | REF. NO. |
|---|---|