YAMAHA

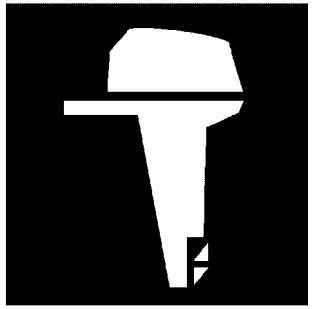

PARTS CATALOGUE
CATALOGUE DE PIECES DETACHEES

F200CET
F225BET
FL200CET
FL225BET

YAMAHA
GENUINE
Parts & Accessories

1Y6AL-300FA

( )

F200CET/F225BET
FL200CET/FL225BET
PARTS CATALOGUE
©2024 by Yamaha Motor Co., Ltd.
1st edition, June 2024
All rights reserved.
Any reprinting or unauthorized use
without the written permission of
Yamaha Motor Co., Ltd.
is expressly prohibited.
Printed in Japan.

F200CET/F225BET
FL200CET/FL225BET
CATALOGUE DE PIECES DETACHEES
©2024 par Yamaha Motor Co., Ltd.
1re édition, juin 2024
Tous droits réservés
Toute réimpression ou utilisation
non autorisée sans la permission écrite
de Yamaha Motor Co., Ltd.
est formellement interdite.
Imprimé au Japon

FOREWORD

This Parts Catalogue is related to the parts for the model(s) on the cover page. When you are ordering replacement parts, please refer to this Parts Catalogue and quote both part numbers and part names correctly.

1. Modifications or additions which have been made after the issue of the Parts Catalogue will be announced in the Parts News.
   It is advisable that you make the necessary corrections to the Parts Catalogue according to the Parts News.

2. Abbreviations
   The following abbreviations are used in this Parts Catalogue.
   "UR" Use specified parts number.
   "UN" Use as many as needed.
   "AP" Alternate Parts
   "LM" Locally Made (Parts need to be ordered locally)
   "F#" Frame No. (Applicable machine No.)
   "O/S" Over Size

3. The number of components for assembly
   - Parts, which are to be supplied in an assembly, are listed with a dot (.) in front of the part name as shown below.
   - The numeral appearing to the right of each component part indicates the quantity of parts for each assembly unit.

PART NO.	DESCRIPTION	Q'TY	REMARKS
2F5–83310–60	FRONT FLASHER LIGHT ASSY	2	
115–83311–60	.BULB (6V–18W)	1	

4. Applicable colours of graphics are represented in the "REMARKS" as shown below.

PART NO.	DESCRIPTION	Q'TY	REMARKS
2N4–24110–00–X5	FUEL TANK COMP.	2	MXR
3J1–24240–10	.GRAPHIC, FUEL TANK	1	FOR MXR

5. Note that the illustrations for reference in finding parts numbers are not to be used for assembling. When assembling, please use the applicable service manual.

6. The asterisk (*) before a reference number indicates modified items after the first edition.

7. Applicable Serial No.
   Engine Serial No.

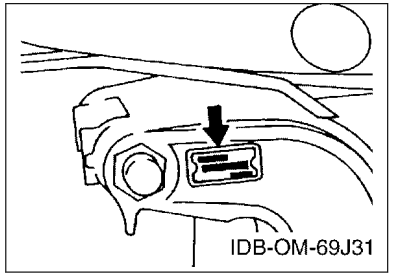

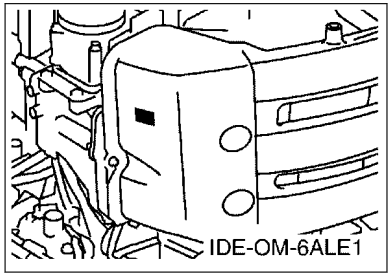

8. Applicable Engine Starting Serial No.

Model	Serial No.	Model	Serial No.
F200C	6AL-1007581	FL200C	6AM-1000751
F225B	6AS-1007403	FL225B	6AT-1000631

9. Applicable Colour Code

Abbreviation	Colour Name	Colour Code
DBN1	DARK BLUISH GRAY 1	008D

10. Quantity Column Information

Column No.	Name Of Q'ty Column	Applicable Model
1	6ALL	F200CET
2	6ASK	F225BET
3	6AML	FL200CET
4	6ATK	FL225BET

AVANT–PROPOS

Ce catalogue de pièces détachées concerne les pièces pour le(s) modèle(s) indiqué(s) sur la page de couverture. Lorsque vous commandez des pièces de rechange, veuillez vous référer à ce catalogue de pieces détachées et indiquer clairement les numéros et les noms des pièces détachées.

1. Les modifications ou ajouts ayant été effectués après la parution du catalogue de pièces détachées seront décrits dans les Bulletins d'information concernant les pièces détachées.
   Il est recommandé que vous apportiez les corrections nécessaires au catalogue des pièces détachées en vous référant aux Bulletins d'information.

2. Abréviations
   Dans ce catalogue, les abréviations suivantes sont utilisées:
   "UR" Utiliser le numéro de pièces spécifié.
   "UN" Utiliser autant que nécessaire.
   "AP" Pièces de substitution
   "LM" Fabrication locale (les pièces doivent être commandées localement.)
   "F#" N° de cadre (applicable au N° de série)
   "O/S" Surdimensionné

3. Nombre de pièces d'un assemblage
   - Les pièces fournies comme composants d'un assemblage sont précédées d'un point (.) de la manière indiquée ci–dessous.
   - Le chiffre apparaissant à la droite de chaque composant indique la quantité de pièces pour chaque unité d'assemblage.

N° PIECES	DESCRIPTION	QTE	REMARQUES
2F5–83310–60	ENS. CLIGNOTANT AVANT	2	
115–83311–60	.AMPOULE (6V–18W)	1	

4. Les couleurs concernant les graphiques sont indiquées dans la colonne "REMARQUES", comme indiqué ci–dessous.

N° PIECES	DESCRIPTION	QTE	REMARQUES
2N4–24110–00–X5	RESERVOIR A ESSENCE.	2	MXR
3J1–24240–10	.GRAPHIQUE	1	POUR MXR

5. Veuillez noter que les illustrations sont indiquées à titre de référence pour trouver les numéros de pièces, non pour être utilisées lors de l'assemblage. Lors de l'assemblage, veuillez utiliser le manuel d'entretien adéquat.

6. L'astérisque (*) placé devant un numéro de référence indique des éléments qui ont été modifiés après la première édition.

7. N° de série applicable
   N° de Série du moteur

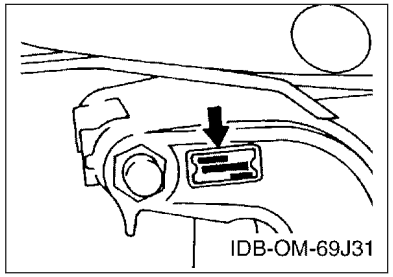

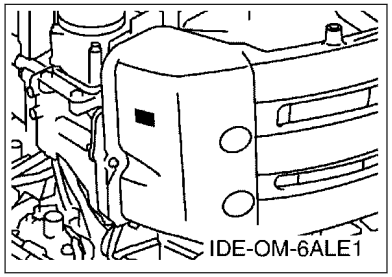

8. N° de série initial du moteur applicable

Modèle	N° de série	Modèle	N° de série
F200C	6AL-1007581	FL200C	6AM-1000751
F225B	6AS-1007403	FL225B	6AT-1000631

9. Code couleur applicable

Abréviation	Nom de la couleur	Code couleur
DBN1	DARK BLUISH GRAY 1	008D

10. Informations relatives à la colonne Quantité

N° de la colonne	Nom de la colonne Qté	Modèle applicable
1	6ALL	F200CET
2	6ASK	F225BET
3	6AML	FL200CET
4	6ATK	FL225BET

CONTENTS

SCHEDULED SERVICE PARTS....1
TOP COWLING....2
CYLINDER & CRANKCASE 1....3
CRANKSHAFT & PISTON....6
CYLINDER & CRANKCASE 2....7
CYLINDER & CRANKCASE 3....9
VALVE....10
INTAKE 1....13
INTAKE 2....15
THROTTLE BODY ASSY 1....17
THROTTLE BODY ASSY 2....18
THROTTLE BODY ASSY 3....19
FUEL INJECTION PUMP 1....20
FUEL INJECTION PUMP 2....22
FUEL 1....23
FUEL 2....25
GENERATOR....26
ELECTRICAL 1....27
ELECTRICAL 2....28
ELECTRICAL 3....29
ELECTRICAL 4....31
STARTING MOTOR....32
BOTTOM COWLING 1....34
BOTTOM COWLING 2....37
CONTROL....38
BRACKET 1....40
BRACKET 2....42
POWER TRIM & TILT ASSY 1....44
POWER TRIM & TILT ASSY 2....48
UPPER CASING....49
OIL PAN....52
LOWER CASING & DRIVE 1....53
LOWER CASING & DRIVE 2....57
LOWER CASING & DRIVE 3....59
LOWER CASING & DRIVE 4....63
STEERING GUIDE ATTACHMENT 1....64
STEERING GUIDE ATTACHMENT 2....65
REMOTE CONTROL BOX....66
REMOTE CONTROL ASSY 1....67
REMOTE CONTROL ASSY 2....70
OPTIONAL PARTS 1....73
OPTIONAL PARTS 2....74
OPTIONAL PARTS 3....75
OPTIONAL PARTS 4....76
OPTIONAL PARTS 5....77
OPTIONAL PARTS 6....78
OPTIONAL PARTS 7....79
REPAIR KIT 1....80
REPAIR KIT 2....81

INDEX

NUMERICAL INDEX....83

TABLE DES MATIERES

PIECES MAINTENANCE PERIODIQUE.....1
CAPOT SUPERIEUR..... 2
CYLINDRE & CARTER 1..... 3
VILEBREQUIN & PISTON.....6
CYLINDRE & CARTER 2..... 7
CYLINDRE & CARTER 3..... 9
SOUPAPE..... 10
ADMISSION 1.....13
ADMISSION 2.....15
CARTER D'ACCELERATEUR 1.....17
CARTER D'ACCELERATEUR 2.....18
CARTER D'ACCELERATEUR 3.....19
POMPE A INJECTEUR 1..... 20
POMPE A INJECTEUR 2..... 22
CARBURANT 1..... 23
CARBURANT 2..... 25
GENERATRICE.....26
PARTIE ELECTRIQUE 1.....27
PARTIE ELECTRIQUE 2.....28
PARTIE ELECTRIQUE 3.....29
PARTIE ELECTRIQUE 4.....31
DEMARREUR ELECTRIQUE.....32
CAPOT INFERIEUR 1.....34
CAPOT INFERIEUR 2.....37
COMMANDE..... 38
SUPPORT 1..... 40
SUPPORT 2..... 42
PUISSANCE PARER ET INCLINER 1..... 44
PUISSANCE PARER ET INCLINER 2..... 48
FOURREAU.....49
VENTILATEUR D'HUILE..... 52
BOITIER D'HELICE TRANSMISSION1.....53
BOITIER D'HELICE TRANSMISSION2.....57
BOITIER D'HELICE TRANSMISSION3.....59
BOITIER D'HELICE TRANSMISSION4.....63
DIRECTION GUIDE ACCESSOIRE 1.....64
DIRECTION GUIDE ACCESSOIRE 2.....65
BOITIER DE COMMANDE A DISTANCE..... 66
BOITIER DE COMMANDE A DISTANCE..... 67
BOITIER DE COMMANDE A DISTANCE..... 70
PIECES OPTIONNELLES 1.....73
PIECES OPTIONNELLES 2.....74
PIECES OPTIONNELLES 3.....75
PIECES OPTIONNELLES 4.....76
PIECES OPTIONNELLES 5.....77
PIECES OPTIONNELLES 6.....78
PIECES OPTIONNELLES 7.....79
KITS DE REPARATION 1..... 80
KITS DE REPARATION 2..... 81

INDEX

INDEX NUMERIQUE.....83

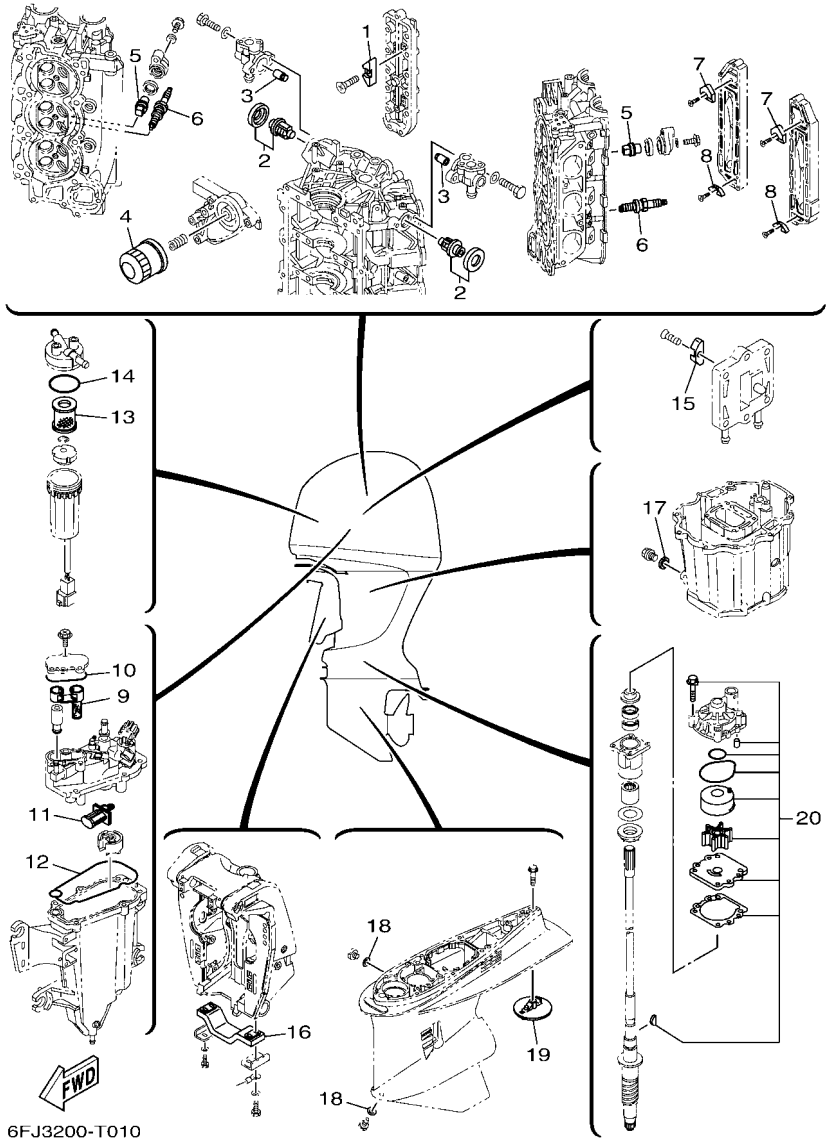

FIG. 1 SCHEDULED SERVICE PARTS — PIECES MAINTENANCE PERIODIQUE

REF. NO.	PART NO. N° PIECES	DESCRIPTION DESCRIPTION	6ALL	6ASK	6AML	6ATK		REMARKS REMARQUES
1	6E5–11325–00	ANODE ANODE	4	4	4	4		
2	67F–12411–01	THERMOSTAT THERMOSTAT	2	2	2	2		
3	6P3–11325–00	ANODE ANODE	2	2	2	2		
4	69J–13440–04	ELEMENT ASSY, OIL CLEANER ELEMENT, FILTRE A HUILE	1	1	1	1		
5	6ML–11325–00	ANODE ANODE	4	4	4	4		
6	94702–00400	PLUG, SPARK (NGK LFR6A-11) BOUGIE D'ALLUMAGE(NGK LFR6A-11	6	6	6	6		
7	6P2–11325–00	ANODE ANODE	2	2	2	2		
8	6E5–11325–00	ANODE ANODE	2	2	2	2		
9	6CB–24501–01	FILTER, FUEL FILTRE	1	1	1	1		
10	6CB–13016–00	O-RING JOINT TORIQUE	1	1	1	1		
11	63P–13915–00	FILTER FILTRE	1	1	1	1		
12	6CB–14984–00	GASKET, FLOAT CHAMBER JOINT, CUVE DE FLOTTEUR	1	1	1	1		
13	6P3–24563–02	ELEMENT, FILTER ELEMENT, FILTRE	1	1	1	1		
14	6P3–24564–00	GASKET JOINT	1	1	1	1		
15	6E5–11325–00	ANODE ANODE	1	1	1	1		
16	6G5–45251–02	ANODE ANODE	1	1	1	1		
17	90430–14M09	GASKET JOINT	1	1	1	1		
18	90430–08003	GASKET JOINT	2	2	2	2		
19	6CE–45373–00	ANODE ANODE	1	1	1	1		
20	61A–W0078–A4	WATER PUMP REPAIR KIT KIT DE REPARATION DE LA POMPE	1	1	1	1		

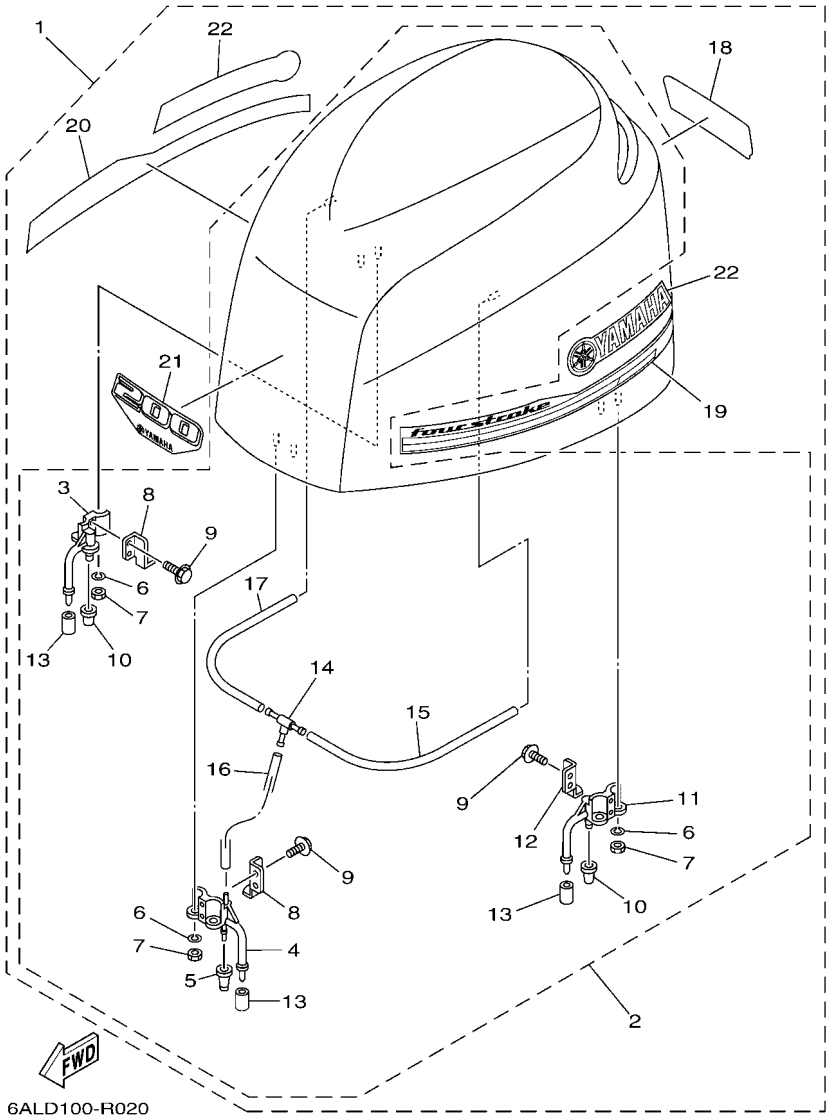

FIG. 2 TOP COWLING — CAPOT SUPERIEUR

REF. NO.	PART NO. N° PIECES	DESCRIPTION DESCRIPTION	6ALL	6ASK	6AML	6ATK		REMARKS REMARQUES
1	6AL–42610–22	TOP COWLING ASSY CAPOT (ENS.)	1		1			
	6AS–42610–22	TOP COWLING ASSY CAPOT (ENS.)		1		1		
2	6P2–4261A–02	.TOP COWLING W/O GRAPHICS .CAPOT SUPERIEUR SANS GRAPHIQUE	1	1	1	1		
3	68F–42647–01	..HOLDER, CLAMP BAND ..SUPPORT, SANDOW DE SERRAGE	1	1	1	1		
4	69J–42647–01	..HOLDER, CLAMP BAND ..SUPPORT, SANDOW DE SERRAGE	1	1	1	1		
5	69J–42663–01	..DAMPER 2 ..AMORTISSEUR 2	1	1	1	1		
6	92990–06100	..WASHER, SPRING ..RONDELLE, GROWER	6	6	6	6		
7	95380–06600	..NUT, HEXAGON ..ECROU	6	6	6	6		
8	60V–42651–01	..HOOK ..CROCHET	2	2	2	2		
9	97E95–06516	..BOLT, HEXAGON W/W DEEP RECESS ..VIS HEXAGONAL AVC RONDELLE	6	6	6	6		
10	68F–42663–01	..DAMPER 2 ..AMORTISSEUR 2	2	2	2	2		
11	68F–42648–01	..HOLDER, CLAMP BAND ..SUPPORT, SANDOW DE SERRAGE	1	1	1	1		
12	60V–42652–00	..HOOK ..CROCHET	1	1	1	1		
13	67F–13448–00	..CAP ..CAPUCHON	3	3	3	3		
14	69J–24378–00	..PIPE, JOINT 3 ..DURITE RACCORDEMENT 3	1	1	1	1		
15	90445–11M27	..HOSE (L240) ..DURITE (L240)	1	1	1	1		
16	90445–11699	..HOSE (L500) ..DURITE (L500)	1	1	1	1		
17	90445–11182	..HOSE (L300) ..DURITE (L300)	1	1	1	1		
18	6AL–42678–10	.GRAPHIC, REAR .ADHESIF, ARRIERE	1		1			
	6AS–42678–10	.GRAPHIC, REAR .ADHESIF, ARRIERE		1		1		
19	6AS–42675–00	.GRAPHIC, SIDE 1 .EMBLEME	1	1	1	1		
20	6AS–42676–00	.GRAPHIC, SIDE 2 .EMBLEME	1	1	1	1		
21	6AL–42677–00	.GRAPHIC, FRONT .ADHESIF, AVANT	1		1			
	6AS–42677–00	.GRAPHIC, FRONT .ADHESIF, AVANT		1		1		
22	63P–42681–20	.MARK, COWLING .ADHESIF, CAPOT	2	2	2	2		

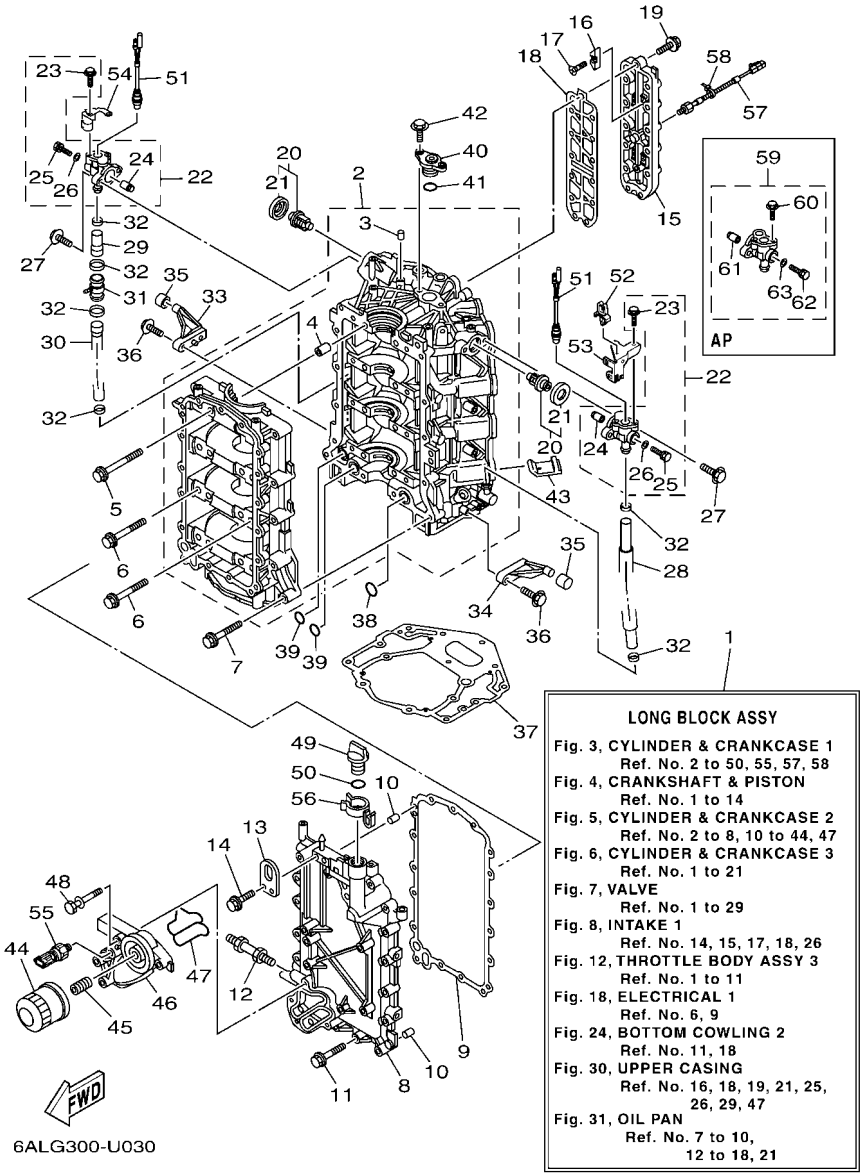

FIG. 3 CYLINDER & CRANKCASE 1 — CYLINDRE & CARTER 1

REF. NO.	PART NO. N° PIECES	DESCRIPTION DESCRIPTION	6ALL	6ASK	6AML	6ATK		REMARKS REMARQUES
1	6P2–11000–06	LONG BLOCK ASSY SOUS-ASSEMBLEE DU MOTEUR	1	1	1	1		
2	6P2–15100–11	CRANKCASE ASSY CARTER DE MOTEUR COMPLET	1	1	1	1		
3	93606–12019	.PIN, DOWEL .GOUPILLE	1	1	1	1		
4	91814–18002	.PIN, DOWEL .GOUJON, D'ASSEMBLAGE	8	8	8	8		
5	6P2–15187–00	BOLT BOULON	8	8	8	8		
6	6P2–15481–00	BOLT 1 BOULON 1	8	8	8	8		
7	90119–08M66	BOLT, WITH WASHER BOULON, AVEC RONDELLE	13	13	13	13		
8	6P2–15411–01–9S	COVER, CRANKCASE 1 COUVERCLE 1, CARTER MOTEUR	1	1	1	1		
9	69J–15451–01	GASKET, CRANKCASE COVER 1 JOINT, COUVERCLE DE CARTER 1	1	1	1	1		
10	93606–12019	PIN, DOWEL GOUPILLE	2	2	2	2		
11	90119–08009	BOLT, WITH WASHER BOULON, AVEC RONDELLE	17	17	17	17		
12	90116–10027	BOLT, STUD GOUJON	1	1	1	1		
13	69J–11119–00	HANGER, ENGINE ANNEAU, LEVAGE	1	1	1	1		
14	90105–06M09	BOLT, FLANGE BOULON, A COLLERETTE	2	2	2	2		
15	6P2–1131C–00–9S	COVER, JOINT COUVERCLE, RACCORDEMENT	1	1	1	1		
16	6E5–11325–00	ANODE ANODE	4	4	4	4		
17	98780–04016	SCREW, FLAT HEAD VIS A TETE FRAISEE	4	4	4	4		
18	6P2–1131B–00	GASKET, COVER JOINT, COUVERCLE	1	1	1	1		
19	90119–06MA4	BOLT, WITH WASHER BOULON, AVEC RONDELLE	13	13	13	13		
20	67F–12411–01	THERMOSTAT THERMOSTAT	2	2	2	2		
21	67F–12412–00	.SEAL, THERMOSTAT .JOINT, THERMOSTAT	1	1	1	1		
22	6P2–1240H–00–9S	ANODE ASSY ANODE COMPLET	2	2	2	2		
23	90109–06M80	.BOLT .BOULON	2	2	2	2		
24	6P3–11325–00	.ANODE .ANODE	1	1	1	1		
25	90105–05012	.BOLT, FLANGE .BOULON, A COLLERETTE	1	1	1	1		
26	90430–05002	.GASKET .JOINT	1	1	1	1		
27	97E95–06525	BOLT, HEXAGON W/W DEEP RECESS VIS HEXAGONAL AVC RONDELLE	4	4	4	4		

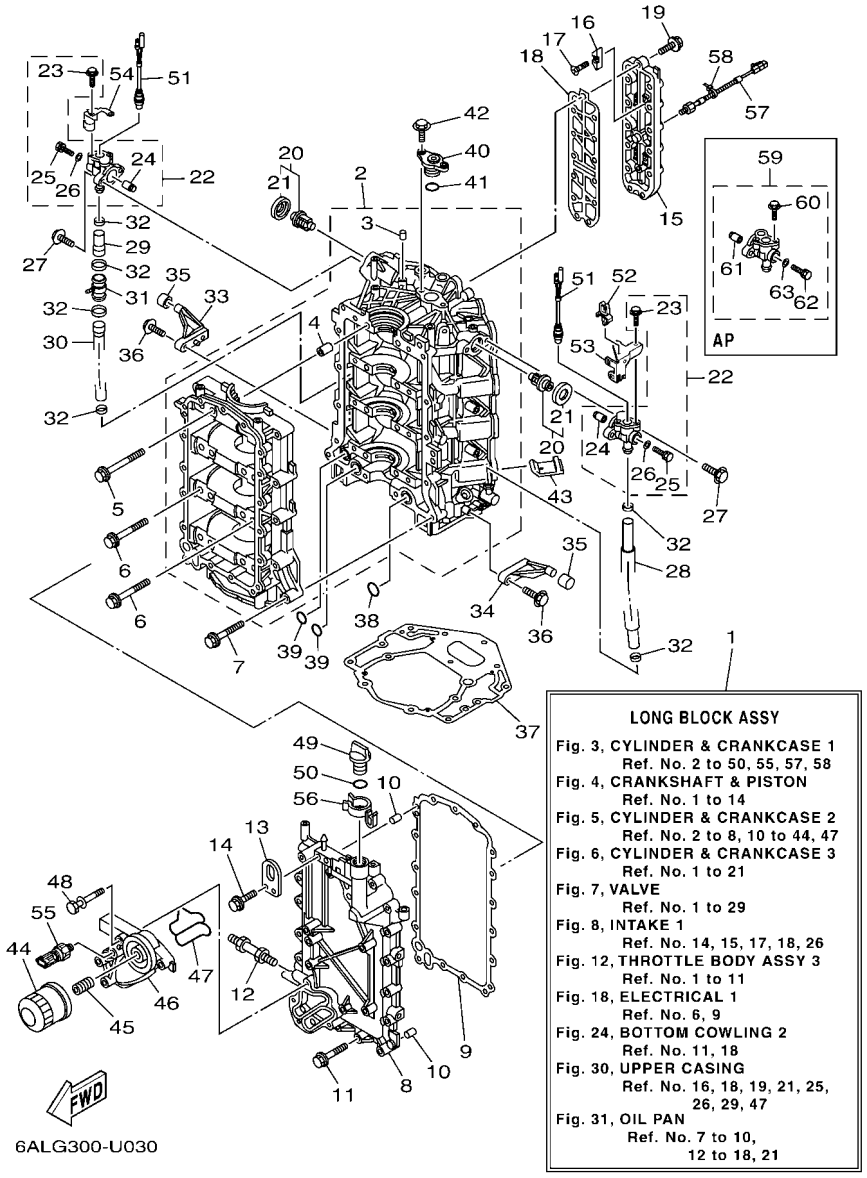

FIG. 3 CYLINDER & CRANKCASE 1 — CYLINDRE & CARTER 1

REF. NO.	PART NO. N° PIECES	DESCRIPTION DESCRIPTION	6ALL	6ASK	6AML	6ATK		REMARKS REMARQUES
28	6P2–1243A–00	HOSE 1 DURITE 1	1	1	1	1		
29	6P2–1243E–00	HOSE 2 DURITE 2	1	1	1	1		
30	6P2–1243F–00	HOSE,3 DURITE 3	1	1	1	1		
31	6S1–24378–00	PIPE, JOINT 3 DURITE RACCORDEMENT 3	1	1	1	1		
32	90465–11M59	CLAMP BRIDE	6	6	6	6		
33	67F–42761–01	STOPPER PLAQUETTE	1	1	1	1		
34	6P2–42761–00	STOPPER PLAQUETTE	1	1	1	1		
35	68F–44533–02	DAMPER, UPPER MOUNT RUBBER COUVERCLE, SUSPENSION INFERIEU	2	2	2	2		
36	97E95–06525	BOLT, HEXAGON W/W DEEP RECESS VIS HEXAGONAL AVC RONDELLE	4	4	4	4		
37	69J–11351–12	GASKET, CYLINDER JOINT, D'EMBASE	1	1	1	1		
38	93210–25552	O-RING JOINT TORIQUE	1	1	1	1		
39	93210–19MJ1	O-RING JOINT TORIQUE	2	2	2	2		
40	69J–11313–00	PLUG, BLIND PLOT, BORGNE	1	1	1	1		
41	93210–25647	O-RING JOINT TORIQUE	1	1	1	1		
42	97E95–06520	BOLT, HEXAGON W/W DEEP RECESS VIS HEXAGONAL AVC RONDELLE	2	2	2	2		
43	69J–14664–01	GROMMET, WATER SHUT PASSE-FIL	2	2	2	2		
44	69J–13440–04	ELEMENT ASSY, OIL CLEANER ELEMENT, FILTRE A HUILE	1	1	1	1		
45	6S5–12858–00	BOLT, UNION BOULON, RACCORD	1	1	1	1		
46	6P2–13446–00–9S	CONNECTOR CONNECTEUR	1	1	1	1		
47	6P2–13477–00	GASKET JOINT	1	1	1	1		
48	90119–06025	BOLT, WITH WASHER BOULON, AVEC RONDELLE	5	5	5	5		
49	6G8–15363–00	PLUG, OIL PLOT, HUILE	1	1	1	1		
50	93210–24M79	O-RING JOINT TORIQUE	1	1	1	1		
51	6P2–82560–01	THERMO SWITCH ASSY THERMO-CONTACT COMPLET	2	2	2	2		
52	90464–06001	CLAMP BRIDE	1	1	1	1		
53	6P2–82588–01	PLATE PLAQUE	1	1	1	1		
54	6P2–82389–10	PLATE 2 PLAQUETTE 2	1	1	1	1		

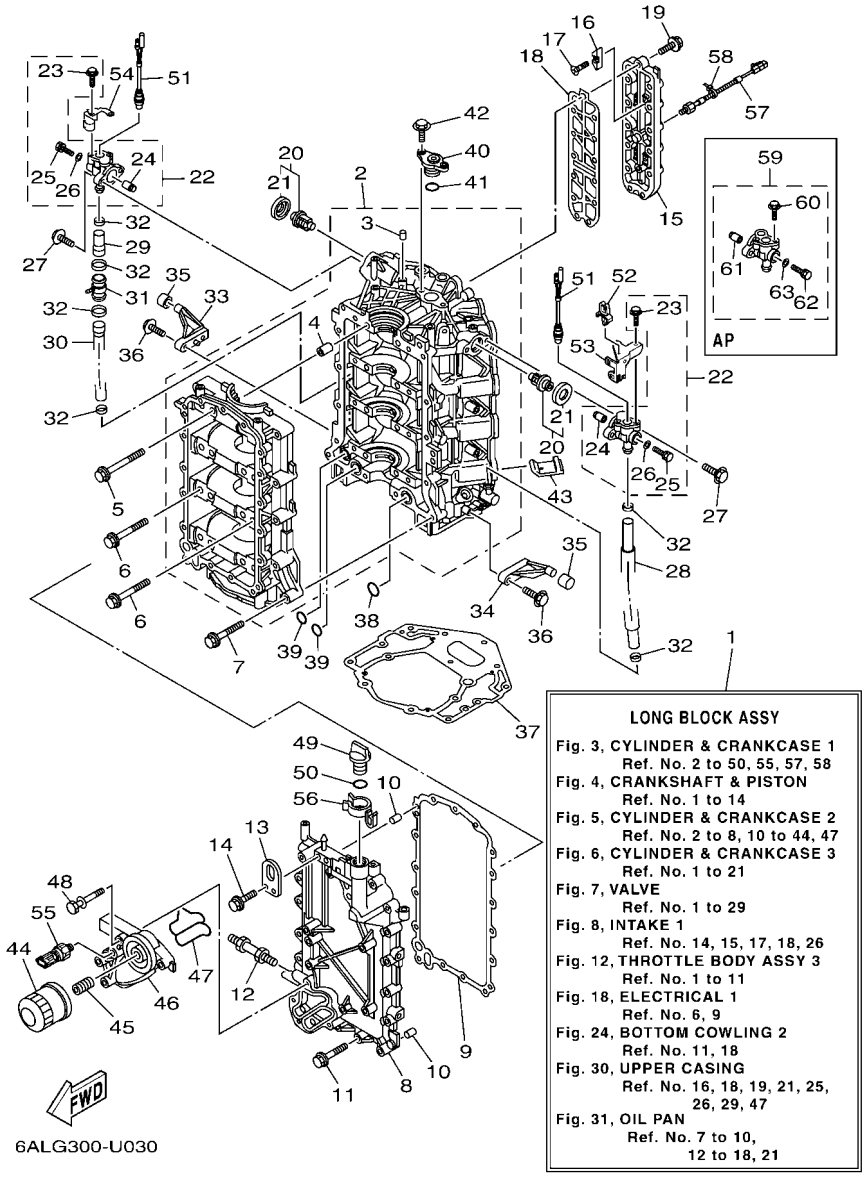

FIG. 3 CYLINDER & CRANKCASE 1 — CYLINDRE & CARTER 1

REF. NO.	PART NO. N° PIECES	DESCRIPTION DESCRIPTION	6ALL	6ASK	6AML	6ATK		REMARKS REMARQUES
55	6AW–83651–01	SENDER, OIL PRESSURE RACCORD, PRESSION D'HUILE	1	1	1	1		
56	6P2–83597–00	CLAMP COLLIER	1	1	1	1		
57	6P2–85780–01	SENSOR, KNOCK SONDE DE COGNEMENT	1	1	1	1		
58	90465–11M10	CLAMP BRIDE	1	1	1	1		
59	6P3–1240H–00–9S	ANODE ASSY ANODE COMPLET	1	1	1	1		AP AP
60	90109–06M80	.BOLT .BOULON	2	2	2	2		
61	6P3–11325–00	.ANODE .ANODE	1	1	1	1		
62	90105–05012	.BOLT, FLANGE .BOULON, A COLLERETTE	1	1	1	1		
63	90430–05002	.GASKET .JOINT	1	1	1	1		

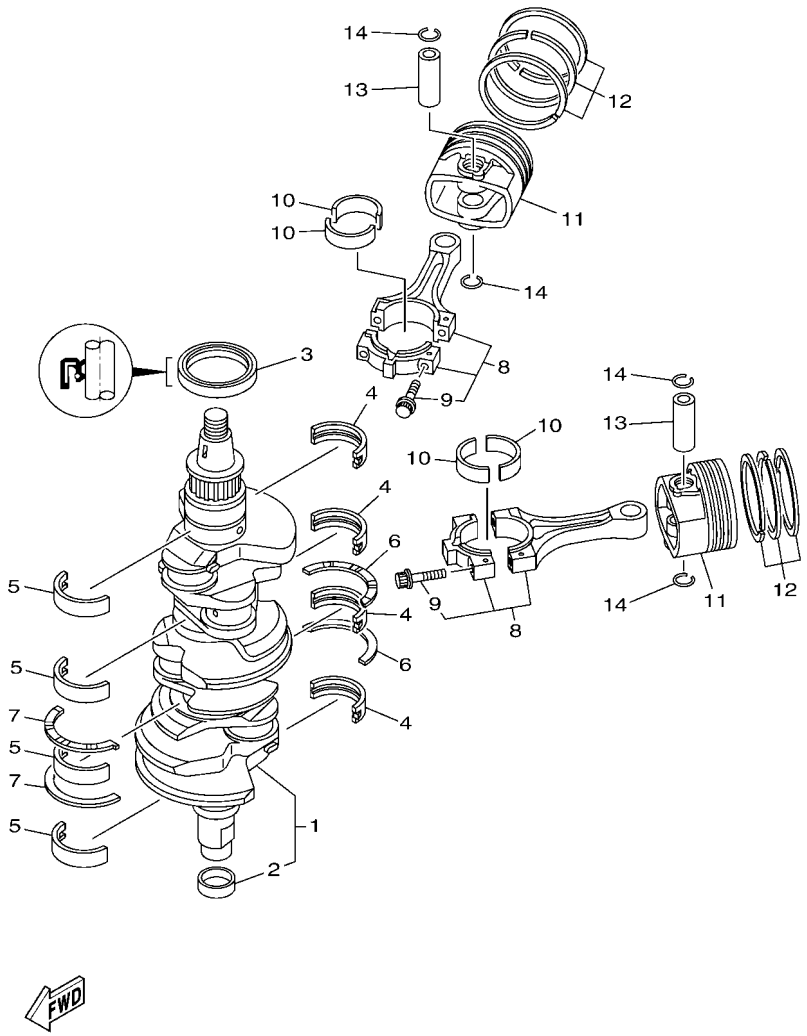

6ALB100-P040

FIG. 4 CRANKSHAFT & PISTON — VILEBREQUIN & PISTON

REF. NO.	PART NO. N° PIECES	DESCRIPTION DESCRIPTION	6ALL	6ASK	6AML	6ATK		REMARKS REMARQUES
1	6P2–11410–10	CRANKSHAFT VILEBREQUIN COMPLET	1	1	1	1		
2	6CB–11478–00	.COLLAR .COLLERETTE	1	1	1	1		
3	93102–63004	OIL SEAL JOINT SPY	1	1	1	1		
4	6P2–11416–00	PLANE BEARING, CRANKSHAFT 1 COUSSINET DE VILEBREQUIN 1	4	4	4	4		UR YELLOW UR YELLOW
	6P2–11416–10	PLANE BEARING, CRANKSHAFT 1 COUSSINET DE VILEBREQUIN 1	4	4	4	4		UR GREEN UR GREEN
	6P2–11416–20	PLANE BEARING, CRANKSHAFT 1 COUSSINET DE VILEBREQUIN 1	4	4	4	4		UR BLUE UR BLUE
5	6P2–11417–00	PLANE BEARING, CRANKSHAFT 2 COUSSINET DE VILEBREQUIN 2	4	4	4	4		UR YELLOW UR YELLOW
	6P2–11417–10	PLANE BEARING, CRANKSHAFT 2 COUSSINET DE VILEBREQUIN 2	4	4	4	4		UR GREEN UR GREEN
	6P2–11417–20	PLANE BEARING, CRANKSHAFT 2 COUSSINET DE VILEBREQUIN 2	4	4	4	4		UR BLUE UR BLUE
6	6AW–11426–01	BEARING, THRUST 1 ROULEMENT DE BUTEE 1	2	2	2	2		
7	6AW–11427–01	BEARING, THRUST 2 ROULEMENT DE BUTEE 2	2	2	2	2		
8	6P2–11650–00	CONNECTING ROD ASSY BIELLE COMPLETTE	6	6	6	6		
9	63P–11654–10	.BOLT, CONNECTING ROD .BOULON, BIELLE	2	2	2	2		
10	6S1–11656–00	PLANE BEARING, CONNECTING ROD ROULEMENT DE BIELLE	12	12	12	12		UR YELLOW UR YELLOW
	6S1–11656–10	PLANE BEARING, CONNECTING ROD ROULEMENT DE BIELLE	12	12	12	12		UR GREEN UR GREEN
	6S1–11656–20	PLANE BEARING, CONNECTING ROD ROULEMENT DE BIELLE	12	12	12	12		UR BLUE UR BLUE
11	6P2–11631–11–93	PISTON (STD) PISTON (STD)	6	6	6	6		
	6P2–11635–10	PISTON (0.25MM O/S) PISTON (0.25MM O/S)	6	6	6	6		AP AP
12	63P–11603–01	PISTON RING SET (STD) JEU DE SEGMENTS (STD)	6	6	6	6		
	63P–11604–00	PISTON RING SET (0.25MM O/S) JEU DE SEGMENTS (0.25MM O/S)	6	6	6	6		AP AP
13	63P–11633–10	PIN, PISTON AXE, PISTON	6	6	6	6		
14	63P–11634–00	CLIP, PISTON PIN AGRAFE, AXE DE PISTON	12	12	12	12		

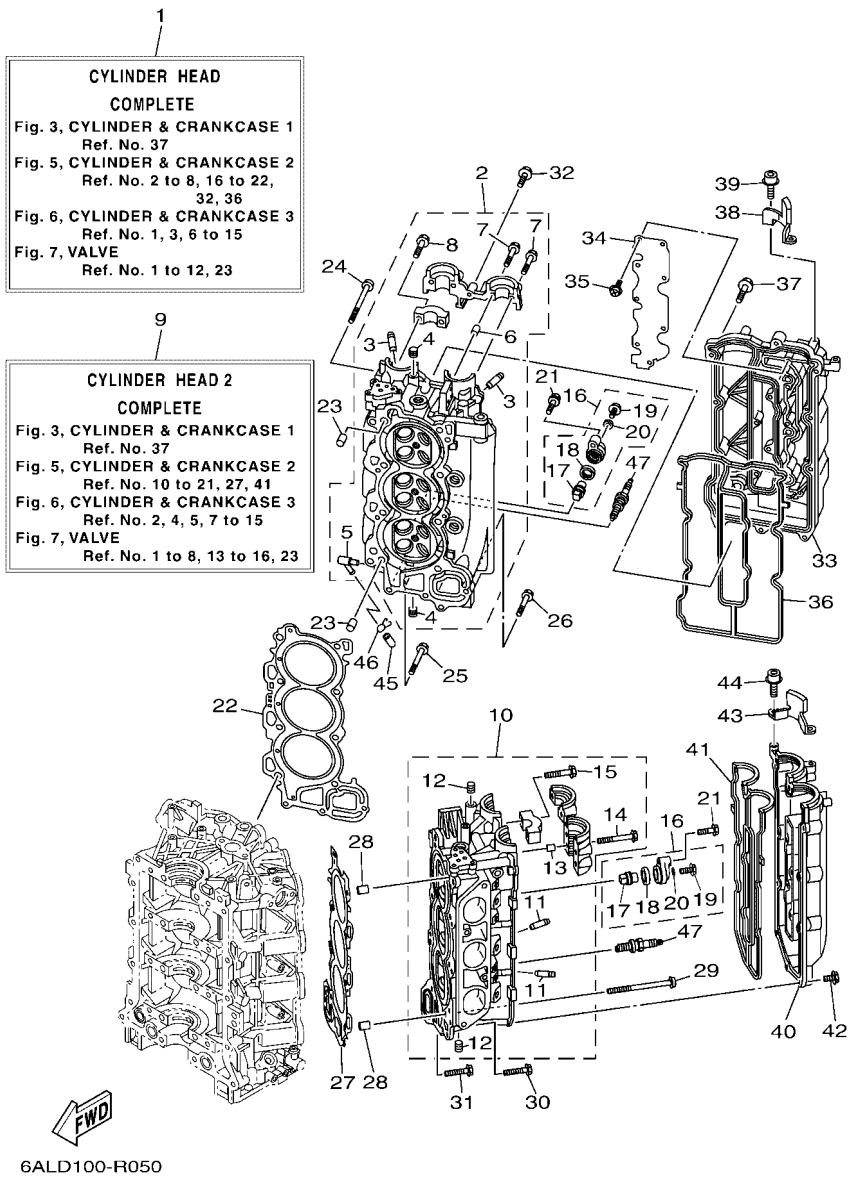

6ALD100-R050

FIG. 5 CYLINDER & CRANKCASE 2 — CYLINDRE & CARTER 2

REF. NO.	PART NO. N° PIECES	DESCRIPTION DESCRIPTION	6ALL	6ASK	6AML	6ATK		REMARKS REMARQUES
1	6P2–W009A–07–9S	CYLINDER HEAD COMPLETE CULASSE (ENS.)	1	1	1	1		
2	6P2–11110–12–9S	CYLINDER HEAD ASSY JEU DE CULASSE	1	1	1	1		
3	6S5–11133–10	.GUIDE, VALVE 1 .GUIDE, SOUPAPE 1	12	12	12	12		
4	90344–51019	.PLUG, TAPER SCREW .PLOT, FILETE CONIQUE	7	7	7	7		
5	676–11372–00	.NIPPLE, HOSE .RACCORD, TUYAU	1	1	1	1		
6	91809–08006	.PIN, DOWEL .GOUJON, D'ASSEMBLAGE	2	2	2	2		
7	90119–07001	.BOLT, WITH WASHER .BOULON, AVEC RONDELLE	4	4	4	4		
8	90119–07234	.BOLT, WITH WASHER .BOULON, AVEC RONDELLE	14	14	14	14		
9	6P2–W009C–07–9S	CYLINDER HEAD 2 COMPLETE CULASSE 2	1	1	1	1		
10	6P2–11120–12–9S	CYLINDER HEAD ASSY 2 CULASSE 2	1	1	1	1		
11	6S5–11133–10	.GUIDE, VALVE 1 .GUIDE, SOUPAPE 1	12	12	12	12		
12	90344–51019	.PLUG, TAPER SCREW .PLOT, FILETE CONIQUE	3	3	3	3		
13	91809–08006	.PIN, DOWEL .GOUJON, D'ASSEMBLAGE	4	4	4	4		
14	90119–07235	.BOLT/WASHER-CAM CAPS .BOULON, AVEC RONDELLE	6	6	6	6		
15	90119–07234	.BOLT, WITH WASHER .BOULON, AVEC RONDELLE	12	12	12	12		
16	69J–11301–02	ANODE COVER ASSY COUVERCLE ANODE (ENS.)	4	4	4	4		
17	6ML–11325–00	.ANODE .ANODE	1	1	1	1		
18	67F–11328–01	.GROMMET, ANODE .PASSE-FIL	1	1	1	1		
19	90105–06M07	.BOLT, FLANGE .BOULON, A COLLERETTE	1	1	1	1		
20	90430–06M03	.GASKET .JOINT	1	1	1	1		
21	97E75–08540	BOLT, HEXAGON W/W DEEP RECESS VIS HEXAGONAL AVC RONDELLE	4	4	4	4		
22	6P2–11181–00	GASKET, CYLINDER HEAD 1 JOINT, DE CULASSE 1	1	1	1	1		
23	99530–14016	PIN, DOWEL GOUJON, D'ASSEMBLAGE	2	2	2	2		
24	90155–10009	SCREW, FLAT FILLISTER VIS, TETE OVALE PLATE	8	8	8	8		
25	90119–08M91	BOLT, WITH WASHER BOULON, AVEC RONDELLE	2	2	2	2		
26	90119–08021	BOLT, WITH WASHER BOULON, AVEC RONDELLE	1	1	1	1		
27	6P2–11182–00	GASKET, CYLINDER HEAD 2 JOINT, CULASSE 2	1	1	1	1		

FIG. 5 CYLINDER & CRANKCASE 2 — CYLINDRE & CARTER 2

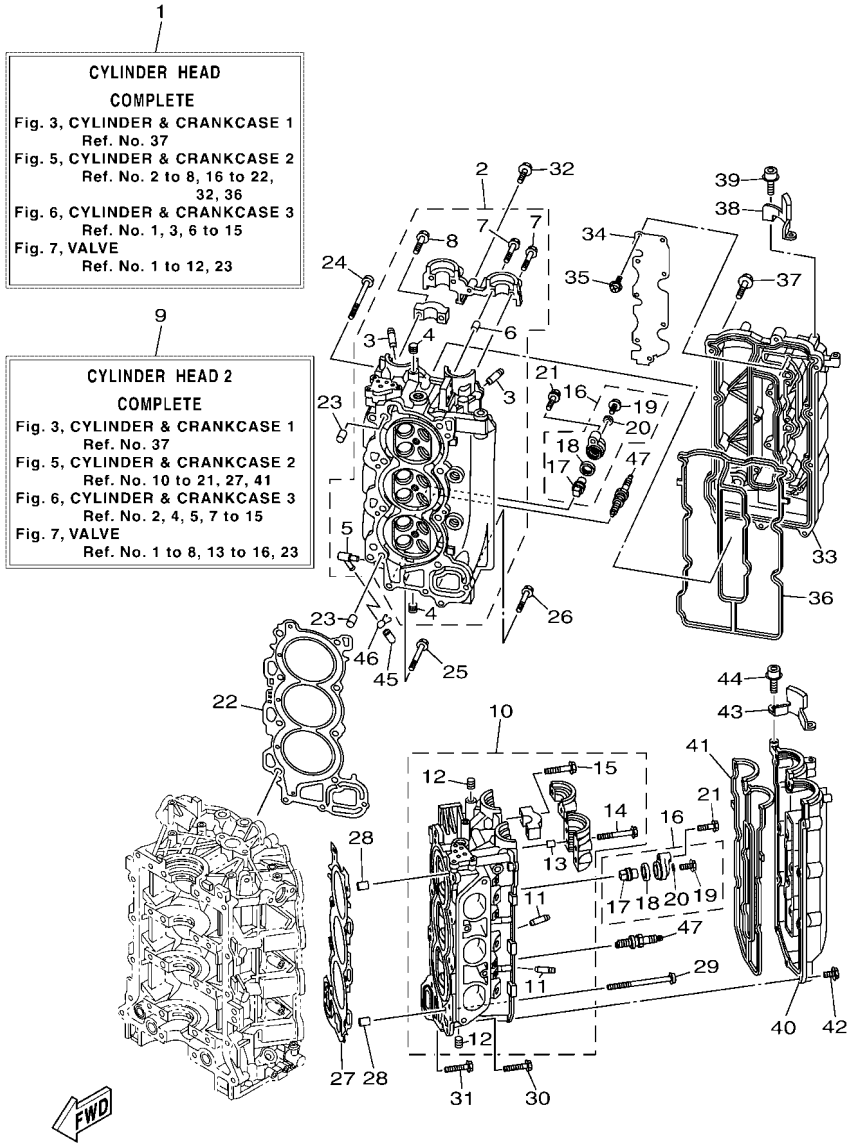

6ALD100-R050

REF. NO.	PART NO. N° PIECES	DESCRIPTION DESCRIPTION	6ALL	6ASK	6AML	6ATK		REMARKS REMARQUES
28	99530–14016	PIN, DOWEL GOUJON, D'ASSEMBLAGE	2	2	2	2		
29	90155–10009	SCREW, FLAT FILLISTER VIS, TETE OVALE PLATE	8	8	8	8		
30	90119–08M91	BOLT, WITH WASHER BOULON, AVEC RONDELLE	2	2	2	2		
31	90119–08021	BOLT, WITH WASHER BOULON, AVEC RONDELLE	1	1	1	1		
32	97E95–06530	BOLT, HEXAGON W/W DEEP RECESS VIS HEXAGONAL AVC RONDELLE	1	1	1	1		
33	6P2–11191–00–9S	COVER, CYLINDER HEAD 1 COUVERCLE, CULASSE 1	1	1	1	1		
34	6P2–11135–00	PLATE, BREATHER 3 PLAQUE, RENIFLARD 3	1	1	1	1		
35	97607–04208	SCREW, WITH WASHER VIS, AVEC RONDELLE	8	8	8	8		
36	6P2–11193–00	GASKET, HEAD COVER 1 JOINT, COUVERCLE DE CULASSE 1	1	1	1	1		
37	97E95–06530	BOLT, HEXAGON W/W DEEP RECESS VIS HEXAGONAL AVC RONDELLE	14	14	14	14		
38	6P2–15142–00	GUIDE 1 GUIDE 1	1	1	1	1		
39	90110–06150	BOLT, HEXAGON SOCKET HEAD BOULON, TETE HEXAGONALE CREUSE	2	2	2	2		
40	6P2–11192–00–9S	COVER, CYLINDER HEAD 2 COUVERCLE, CULASSE 2	1	1	1	1		
41	6P2–11194–00	GASKET, HEAD COVER 2 JOINT, COUVERCLE DE CULASSE 2	1	1	1	1		
42	97E95–06530	BOLT, HEXAGON W/W DEEP RECESS VIS HEXAGONAL AVC RONDELLE	14	14	14	14		
43	6P2–15143–00	GUIDE GUIDE	1	1	1	1		
44	90110–06150	BOLT, HEXAGON SOCKET HEAD BOULON, TETE HEXAGONALE CREUSE	2	2	2	2		
45	6P2–13448–00	CAP CAPUCHON	1	1	1	1		
46	90467–08M18	CLIP JONC	1	1	1	1		
47	94702–00400	PLUG, SPARK (NGK LFR6A-11) BOUGIE D'ALLUMAGE(NGK LFR6A-11	6	6	6	6		

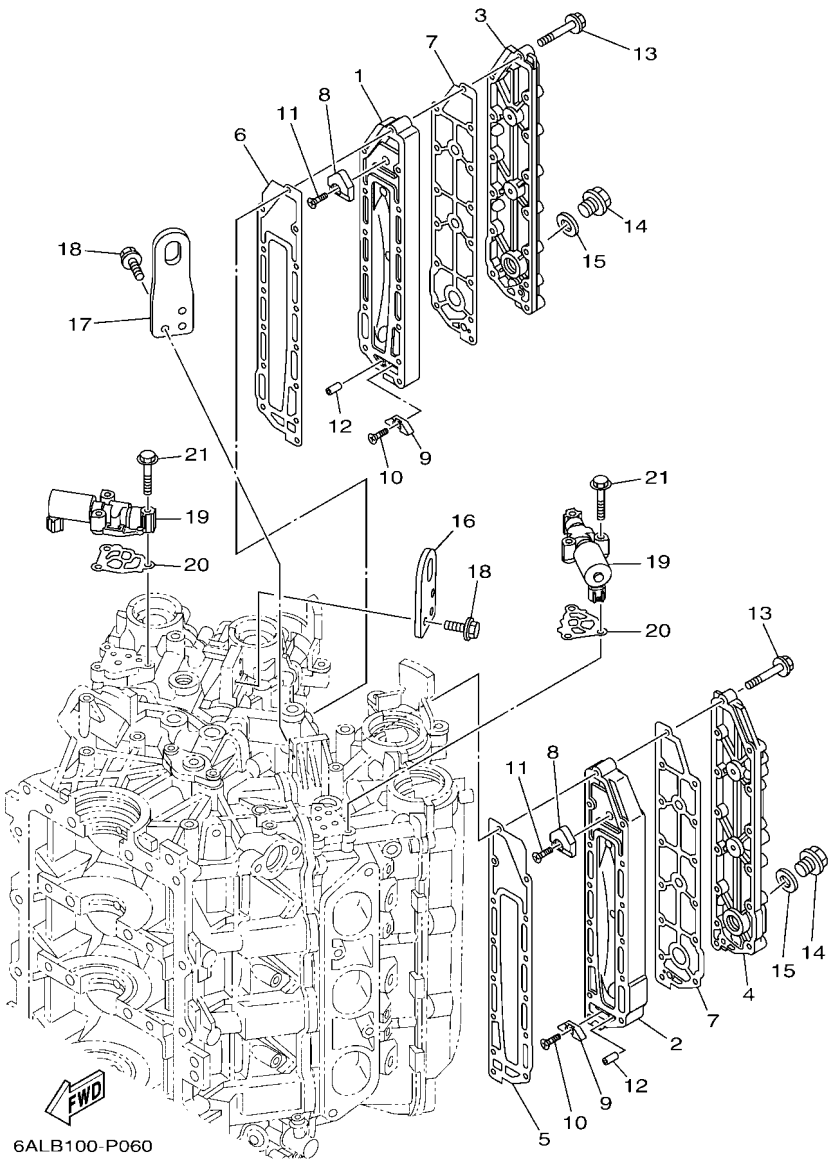

FIG. 6 CYLINDER & CRANKCASE 3 — CYLINDRE & CARTER 3

REF. NO.	PART NO. N° PIECES	DESCRIPTION DESCRIPTION	6ALL	6ASK	6AML	6ATK		REMARKS REMARQUES
1	69J–41111–01–9S	INNER COVER, EXHAUST PLAQUE, ECHAPPEMENT	1	1	1	1		
2	69J–41121–01–9S	INNER COVER,EXHAUST PLAQUE, ECHAPPEMENT	1	1	1	1		
3	69J–41113–02–9S	OUTER COVER, EXHAUST COUVERCLE, ECHAPPEMENT	1	1	1	1		
4	69J–41123–02–9S	OUTER COVER, EXHAUST COUVERCLE, ECHAPPEMENT	1	1	1	1		
5	6P2–41112–00	GASKET, EXHAUST INNER COVER JOINT, PLAQUE D'ECHAPPEMENT	1	1	1	1		
6	6P2–41122–00	GASKET, EXHAUST INNER COVER JOINT, PLAQUE D'EHAPPEMENT	1	1	1	1		
7	6P2–41114–00	GASKET, EXHAUST OUTER COVER JOINT, COUVERCLE D'ECHAPPEMENT	2	2	2	2		
8	6P2–11325–00	ANODE ANODE	2	2	2	2		
9	6E5–11325–00	ANODE ANODE	2	2	2	2		
10	98780–04016	SCREW, FLAT HEAD VIS A TETE FRAISEE	2	2	2	2		
11	90151–06M02	SCREW, COUNTERSUNK VIS, TETE NOYEE	2	2	2	2		
12	91690–40010	PIN, SPRING AGRAFFE	2	2	2	2		
13	90119–06027	BOLT, WITH WASHER BOULON, AVEC RONDELLE	28	28	28	28		
14	90340–18M09	PLUG, STRAIGHT SCREW PLOT, FILETE DROIT	2	2	2	2		
15	90201–186F1	WASHER, PLATE RONDELLE, PLATE	2	2	2	2		
16	6P2–11119–00	HANGER, ENGINE ANNEAU, LEVAGE	1	1	1	1		
17	6P2–1111E–00	HANGER, ENGINE 2 ANNEAU, LEVAGE 2	1	1	1	1		
18	90105–06M09	BOLT, FLANGE BOULON, A COLLERETTE	6	6	6	6		
19	6CB–86120–00	SOLENOID VALVE ASSY SOLENOIDE	2	2	2	2		
20	6CB–1242F–00	GASKET, FILTER JOINT, FILTRE	2	2	2	2		
21	90105–06035	BOLT, FLANGE BOULON, A COLLERETTE	6	6	6	6		

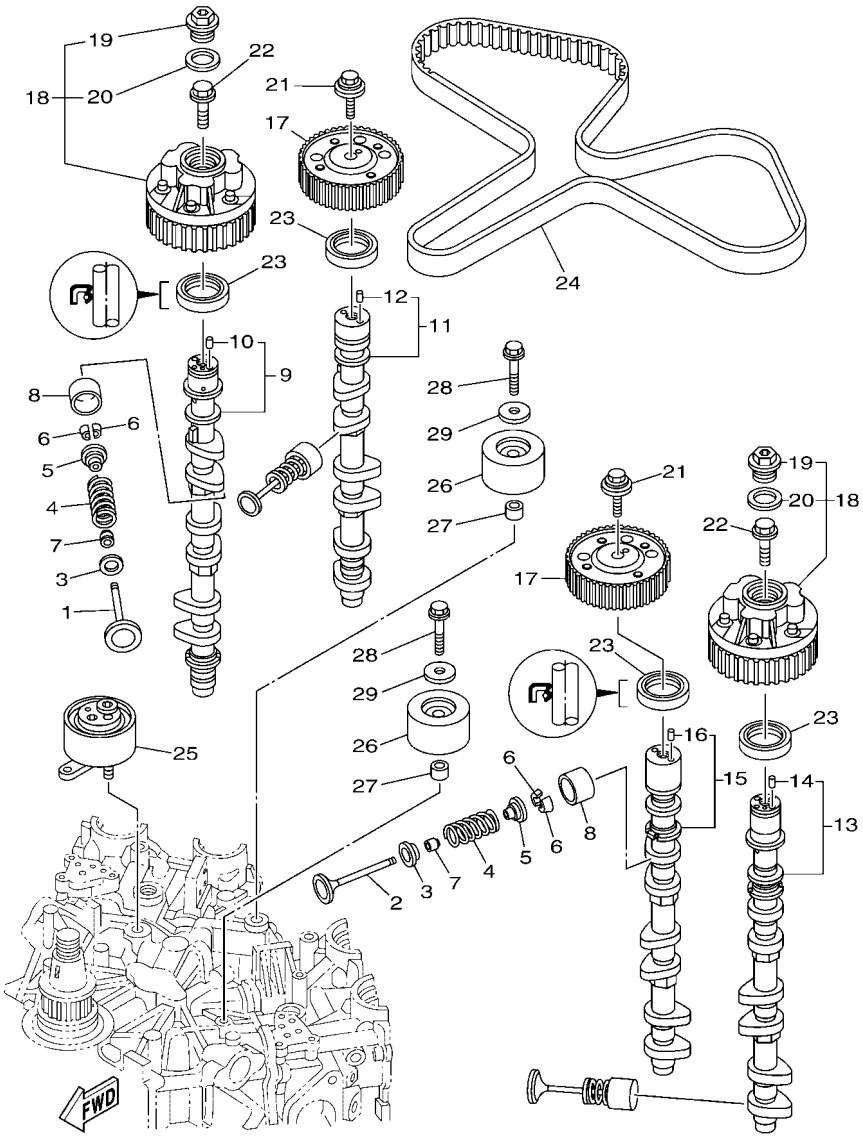

6ALC100-Q070

FIG. 7 VALVE — SOUPAPE

REF. NO.	PART NO. N° PIECES	DESCRIPTION DESCRIPTION	6ALL	6ASK	6AML	6ATK		REMARKS REMARQUES
1	6P2–12111–10	VALVE, INTAKE SOUPAPE, ADMISSION	12	12	12	12		
2	6DX–12121–00	VALVE, EXHAUST SOUPAPE, ECHAPPEMENT	12	12	12	12		
3	K0F–A3743–00	SEAT, VALVE SPRING SIEGE, RESSORT DE SOUPAPE	24	24	24	24		
4	6CB–12113–00	SPRING, VALVE INNER RESSORT DE SOUPAPE, INTERNE	24	24	24	24		
5	K0F–A3741–00	RETAINER, VALVE SPRING BUTEE DE RESSORT DE SOUPAPA	24	24	24	24		
6	K0F–A3742–00	LOCK, VALVE SPRING RETAINER FRAISE, SOUPAPE	48	48	48	48		
7	51Y–12119–00	SEAL, VALVE STEM JOINT, QUEUE DE SOUPAPE	24	24	24	24		
8	K0F–A3751–00	LIFTER, VALVE (3.000) LEVE-SOUPAPE (3.000)	24	24	24	24		UR UR
	K0F–A3751–10	LIFTER, VALVE (3.025) LEVE-SOUPAPE (3.025)	24	24	24	24		UR UR
	K0F–A3751–20	LIFTER, VALVE (3.050) LEVE-SOUPAPE (3.050)	24	24	24	24		UR UR
	K0F–A3751–30	LIFTER, VALVE (3.075) LEVE-SOUPAPE (3.075)	24	24	24	24		UR UR
	K0F–A3751–40	LIFTER, VALVE (3.100) LEVE-SOUPAPE (3.100)	24	24	24	24		UR UR
	K0F–A3751–50	LIFTER, VALVE (3.122) LEVE-SOUPAPE (3.122)	24	24	24	24		UR UR
	K0F–A3751–60	LIFTER, VALVE (3.142) LEVE-SOUPAPE (3.142)	24	24	24	24		UR UR
	K0F–A3751–70	LIFTER, VALVE (3.162) LEVE-SOUPAPE (3.162)	24	24	24	24		UR UR
	K0F–A3751–80	LIFTER, VALVE (3.182) LEVE-SOUPAPE (3.182)	24	24	24	24		UR UR
	K0F–A3751–90	LIFTER, VALVE (3.202) LEVE-SOUPAPE (3.202)	24	24	24	24		UR UR
	K0F–A3751–A0	LIFTER, VALVE (3.222) LEVE-SOUPAPE (3.222)	24	24	24	24		UR UR
	K0F–A3751–B0	LIFTER, VALVE (3.242) LEVE-SOUPAPE (3.242)	24	24	24	24		UR UR
	K0F–A3751–C0	LIFTER, VALVE (3.262) LEVE-SOUPAPE (3.262)	24	24	24	24		UR UR
	K0F–A3751–D0	LIFTER, VALVE (3.282) LEVE-SOUPAPE (3.282)	24	24	24	24		UR UR
	K0F–A3751–E0	LIFTER, VALVE (3.302) LEVE-SOUPAPE (3.302)	24	24	24	24		UR UR
	K0F–A3751–F0	LIFTER, VALVE (3.322) LEVE-SOUPAPE (3.322)	24	24	24	24		UR UR
	K0F–A3751–G0	LIFTER, VALVE (3.342) LEVE-SOUPAPE (3.342)	24	24	24	24		UR UR
	K0F–A3751–H0	LIFTER, VALVE (3.362) LEVE-SOUPAPE (3.362)	24	24	24	24		UR UR
	K0F–A3751–J0	LIFTER, VALVE (3.382) LEVE-SOUPAPE (3.382)	24	24	24	24		UR UR
	K0F–A3751–K0	LIFTER, VALVE (3.402) LEVE-SOUPAPE (3.402)	24	24	24	24		UR UR

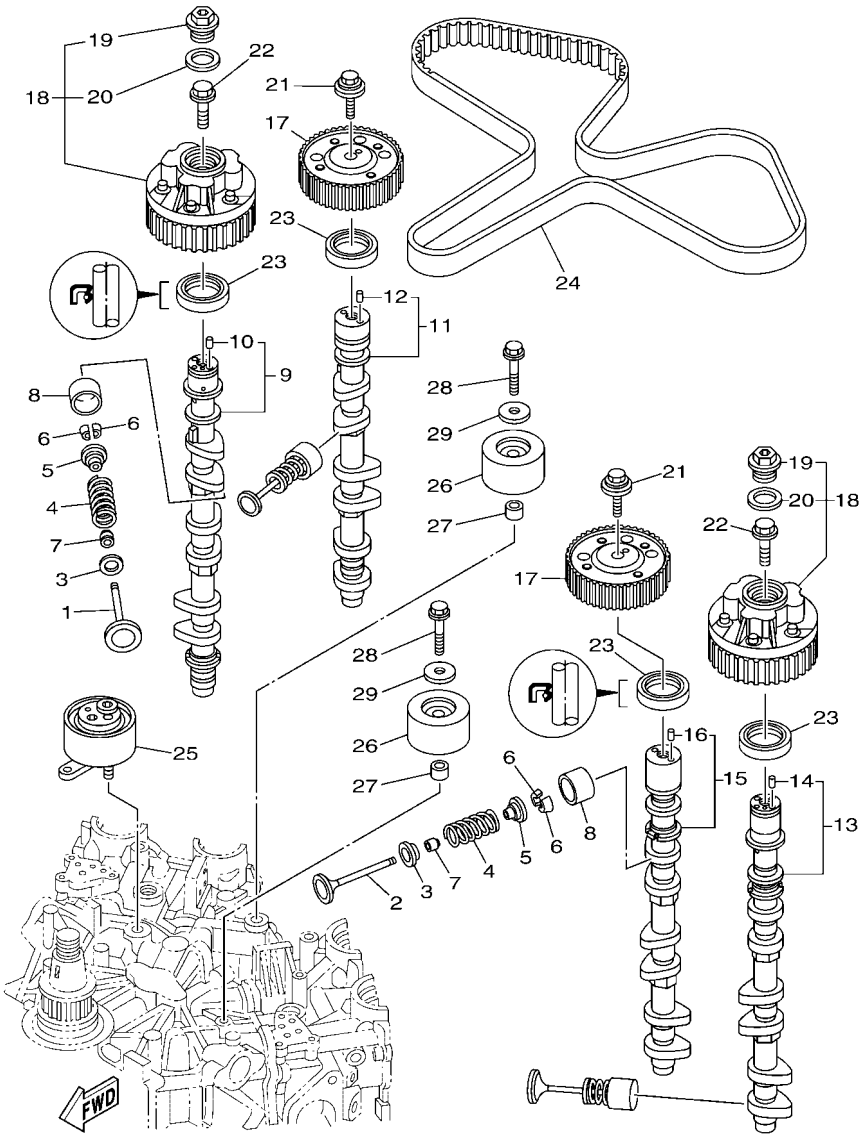

6ALC100-Q070

FIG. 7 VALVE — SOUPAPE

REF. NO.	PART NO. N° PIECES	DESCRIPTION DESCRIPTION	6ALL	6ASK	6AML	6ATK		REMARKS REMARQUES
8	K0F–A3751–L0	LIFTER, VALVE (3.422) LEVE-SOUPAPE (3.422)	24	24	24	24		UR UR
	K0F–A3751–M0	LIFTER, VALVE (3.442) LEVE-SOUPAPE (3.442)	24	24	24	24		UR UR
	K0F–A3751–N0	LIFTER, VALVE (3.462) LEVE-SOUPAPE (3.462)	24	24	24	24		UR UR
	K0F–A3751–P0	LIFTER, VALVE (3.482) LEVE-SOUPAPE (3.482)	24	24	24	24		UR UR
	K0F–A3751–R0	LIFTER, VALVE (3.502) LEVE-SOUPAPE (3.502)	24	24	24	24		UR UR
	K0F–A3751–S0	LIFTER, VALVE (3.522) LEVE-SOUPAPE (3.522)	24	24	24	24		UR UR
	K0F–A3751–T0	LIFTER, VALVE (3.542) LEVE-SOUPAPE (3.542)	24	24	24	24		UR UR
	K0F–A3753–00	LIFTER, VALVE (3.562) LEVE-SOUPAPE (3.562)	24	24	24	24		UR UR
	K0F–A3753–10	LIFTER, VALVE (3.582) LEVE-SOUPAPE (3.582)	24	24	24	24		UR UR
	K0F–A3753–20	LIFTER, VALVE (3.602) LEVE-SOUPAPE (3.602)	24	24	24	24		UR UR
	K0F–A3753–30	LIFTER, VALVE (3.625) LEVE-SOUPAPE (3.625)	24	24	24	24		UR UR
	K0F–A3753–40	LIFTER, VALVE (3.650) LEVE-SOUPAPE (3.650)	24	24	24	24		UR UR
	K0F–A3753–50	LIFTER, VALVE (3.675) LEVE-SOUPAPE (3.675)	24	24	24	24		UR UR
	K0F–A3753–60	LIFTER, VALVE (3.700) LEVE-SOUPAPE (3.700)	24	24	24	24		UR UR
	K0F–A3753–70	LIFTER, VALVE (3.725) LEVE-SOUPAPE (3.725)	24	24	24	24		UR UR
9	6P2–12171–11	CAMSHAFT 1 ARBRE A CAMES 1	1	1	1	1		
10	93605–10108	.PIN, DOWEL .AXE	1	1	1	1		
11	6P2–12181–11	CAMSHAFT 2 ARBRE A CAMES 2	1	1	1	1		
12	93605–10108	.PIN, DOWEL .AXE	1	1	1	1		
13	6P2–12172–11	CAMSHAFT 3 ARBRE A CAMES 3	1	1	1	1		
14	93605–10108	.PIN, DOWEL .AXE	1	1	1	1		
15	6P2–12182–11	CAMSHAFT 4 ARBRE A CAMES 4	1	1	1	1		
16	93605–10108	.PIN, DOWEL .AXE	1	1	1	1		
17	6FA–11567–00	GEAR, DRIVEN 2 PIGNON SECONDAIRE 2	2	2	2	2		
18	6P2–12645–22	PULLEY ASSY 1 POULIE COMPLET 1	2	2	2	2		
19	6P2–12623–00	.BOLT .BOULON	1	1	1	1		
20	6P2–12663–00	.GASKET .JOINT	1	1	1	1		

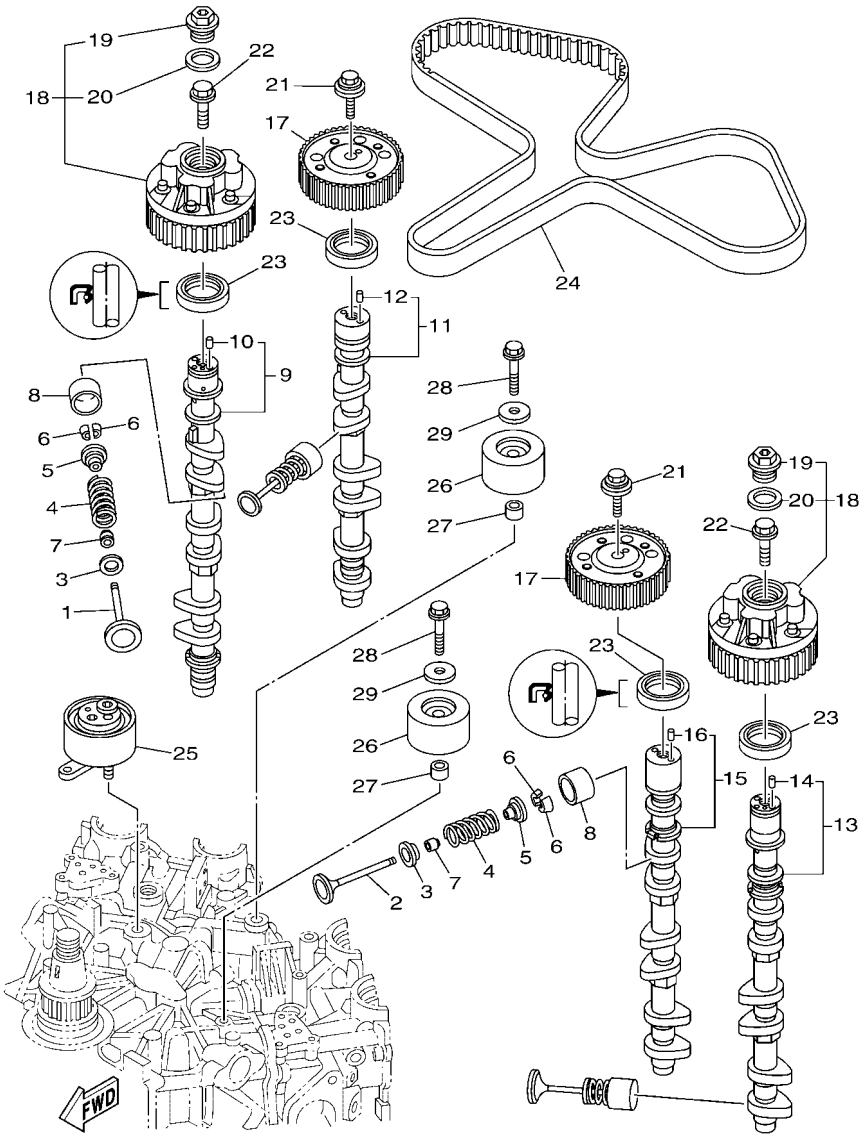

6ALC100-Q070

FIG. 7 VALVE — SOUPAPE

REF. NO.	PART NO. N° PIECES	DESCRIPTION DESCRIPTION	6ALL	6ASK	6AML	6ATK		REMARKS REMARQUES
21	90119–10050	BOLT, WITH WASHER BOULON, AVEC RONDELLE	2	2	2	2		
22	6P2–12615–00	BOLT BOULON	2	2	2	2		
23	93102–38008	OIL SEAL JOINT SPY	4	4	4	4		
24	6P2–46241–02	BELT COURROIE TRAPEZOIDALE	1	1	1	1		
25	6P2–11590–03	TENSIONER ASSY TENDEUR (ENS.)	1	1	1	1		
26	6P2–15512–00	GEAR, IDLER 1 PIGNON, INTERMEDIAIRE 1	2	2	2	2		
27	99530–14016	PIN, DOWEL GOUJON, D'ASSEMBLAGE	2	2	2	2		
28	90119–10M07	BOLT, WITH WASHER BOULON, AVEC RONDELLE	2	2	2	2		
29	90201–10M01	WASHER, PLATE RONDELLE, PLATE	2	2	2	2		

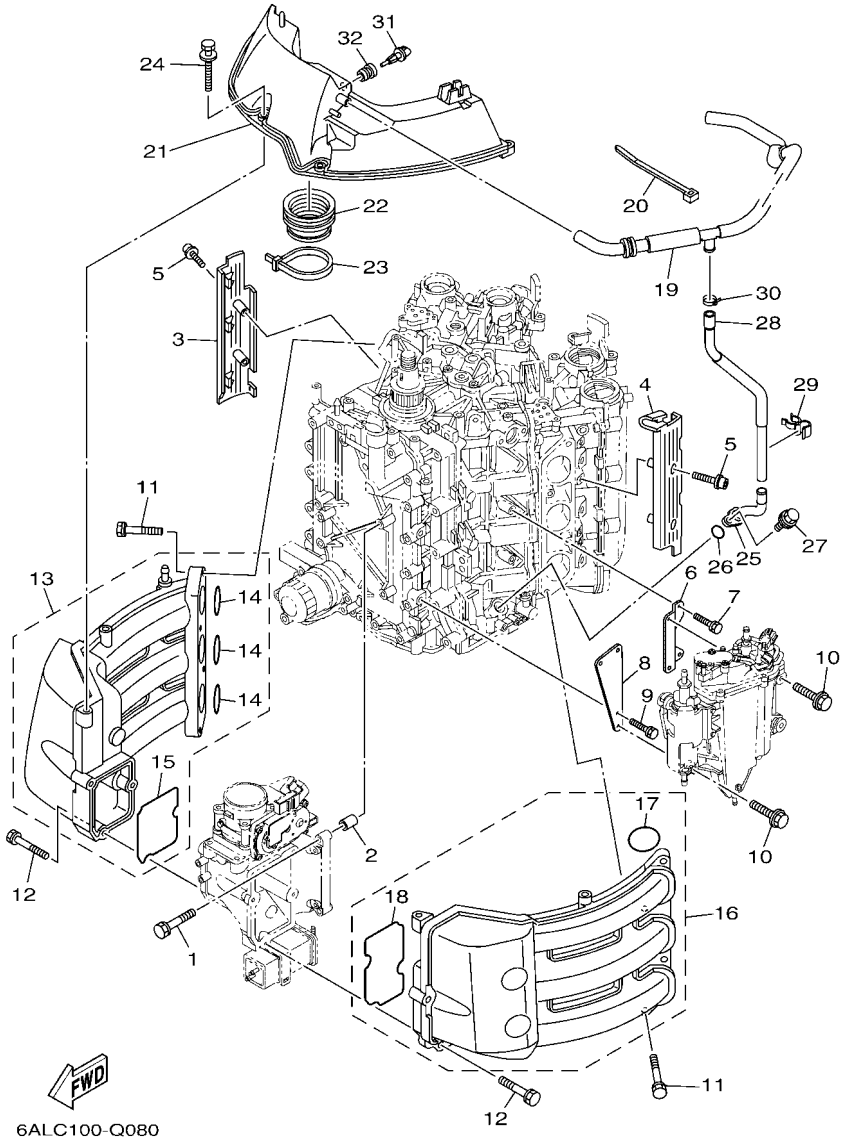

FIG. 8 INTAKE 1 — ADMISSION 1

REF. NO.	PART NO. N° PIECES	DESCRIPTION DESCRIPTION	6ALL	6ASK	6AML	6ATK		REMARKS REMARQUES
1	97E75–08540	BOLT, HEXAGON W/W DEEP RECESS VIS HEXAGONAL AVC RONDELLE	4	4	4	4		
2	99530–10114	PIN, DOWEL GOUJON, D'ASSEMBLAGE	2	2	2	2		
3	6P2–13564–00	COVER, MANIFOLD COUVERCLE, TUBULURE	1	1	1	1		
4	6P2–13594–00	COVER, MANIFOLD 2 COUVERCLE, TUBULURE 2	1	1	1	1		
5	90110–06038	BOLT, HEXAGON SOCKET HEAD BOULON, TETE HEXAGONALE CREUSE	4	4	4	4		
6	6P2–24422–10	PLATE PLAQUETTE	1	1	1	1		
7	97E75–06516	BOLT, HEXAGON W/W DEEP RECESS VIS HEXAGONAL AVC RONDELLE	2	2	2	2		
8	6P2–24419–00	BRKT., SEPARATOR SUPPORT	1	1	1	1		
9	97E75–06516	BOLT, HEXAGON W/W DEEP RECESS VIS HEXAGONAL AVC RONDELLE	2	2	2	2		
10	90119–06299	BOLT, WITH WASHER BOULON, AVEC RONDELLE	4	4	4	4		
11	97E75–08540	BOLT, HEXAGON W/W DEEP RECESS VIS HEXAGONAL AVC RONDELLE	8	8	8	8		
12	90119–06MA6	BOLT, WITH WASHER BOULON, AVEC RONDELLE	7	7	7	7		
13	6P2–13641–00	MANIFOLD, INTAKE 1 TUBULURE, ADMISSION 1	1	1	1	1		
14	6P2–13645–00	.GASKET, MANIFOLD 1 .JOINT, TUBULURE 1	3	3	3	3		
15	6P2–13646–00	.GASKET, MANIFOLD 2 .JOINT, TUBULURE 2	1	1	1	1		
16	6P2–13642–00	MANIFOLD 2 TUBULURE 2	1	1	1	1		
17	6P2–13645–00	.GASKET, MANIFOLD 1 .JOINT, TUBULURE 1	3	3	3	3		
18	6P2–13647–00	.GASKET, MANIFOLD 3 .JOINT, TUBULURE 3	1	1	1	1		
19	6P2–15373–02	PIPE, BREATHER DURITE DE RENIFLARD	1	1	1	1		
20	90465–13M18	CLAMP BRIDE	1	1	1	1		
21	6P2–14440–00	SILENCER ASSY, INTAKE SIENCIEUX D'ADMISSION	1	1	1	1		
22	6P2–1441J–01	PIPE, SILENCER DURITE, DE SILENCIEUX	1	1	1	1		
23	90464–99004	CLAMP BRIDE	1	1	1	1		
24	90119–06311	BOLT, WITH WASHER BOULON, AVEC RONDELLE	4	4	4	4		
25	6P2–11372–00	NIPPLE, HOSE RACCORD, TUYAU	1	1	1	1		
26	93210–19MJ3	O-RING JOINT TORIQUE	1	1	1	1		
27	97E95–06620	BOLT, HEXAGON W/W DEEP RECESS VIS HEXAGONAL AVC RONDELLE	1	1	1	1		

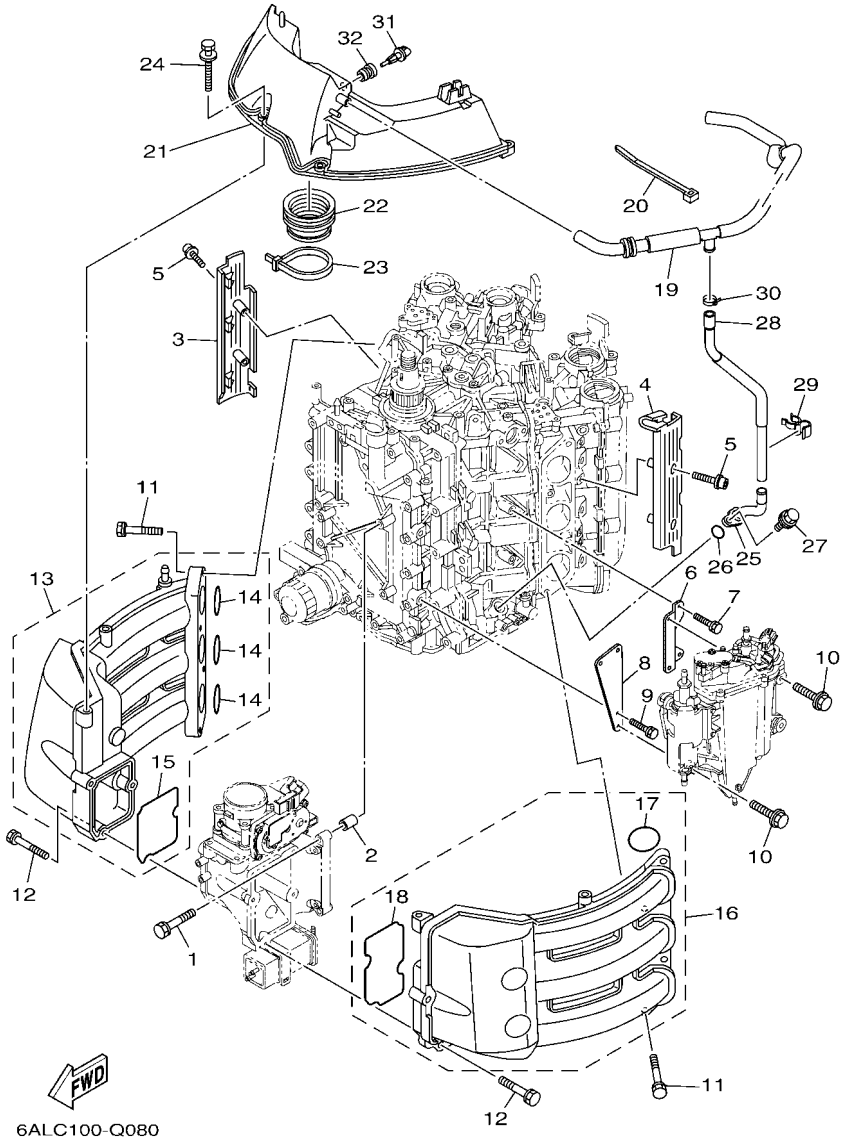

FIG. 8 INTAKE 1 — ADMISSION 1

REF. NO.	PART NO. N° PIECES	DESCRIPTION DESCRIPTION	6ALL	6ASK	6AML	6ATK		REMARKS REMARQUES
28	6P2–11377–00	HOSE DURITE	1	1	1	1		
29	90464–20011	CLAMP BRIDE	1	1	1	1		
30	90465–11M10	CLAMP BRIDE	1	1	1	1		
31	63P–85886–00	SENSOR, AIR TEMPERATURE SONDE	1	1	1	1		
32	63P–14435–00	GROMMET RONDELLE CAOUTCHOUC	1	1	1	1		

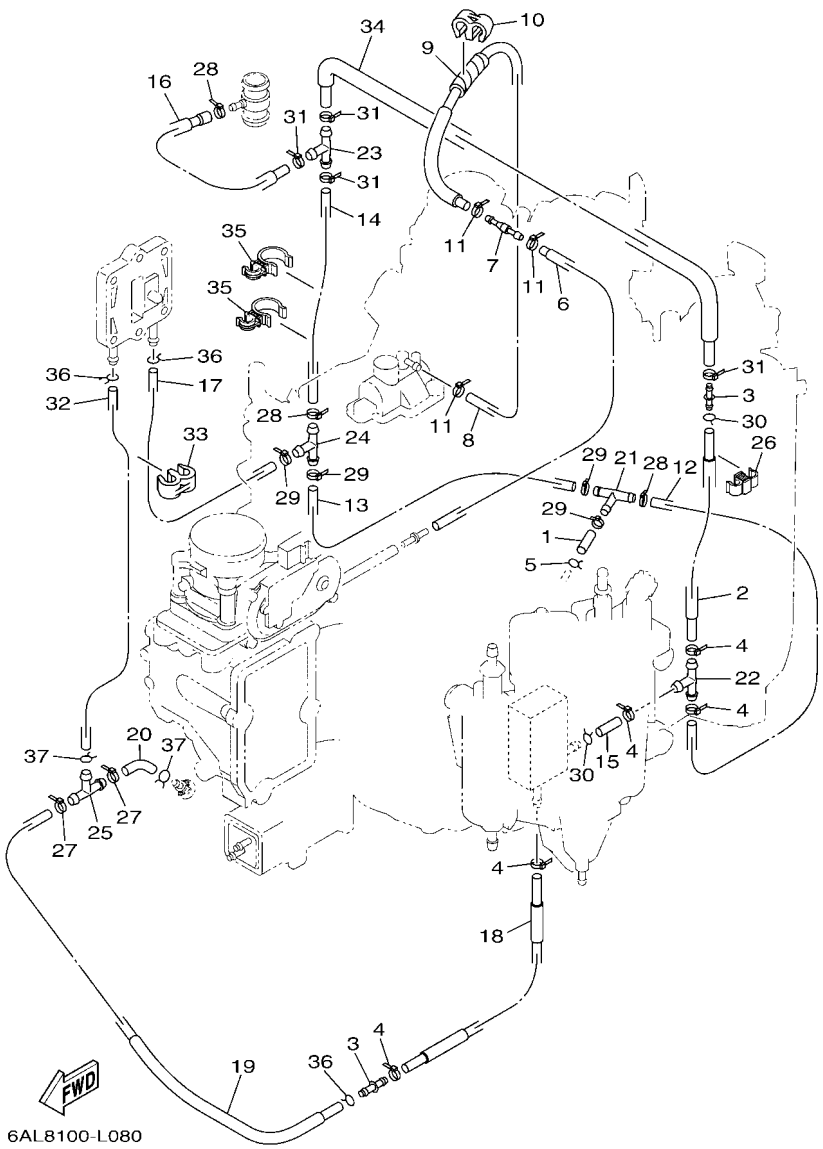

FIG. 9 INTAKE 2 — ADMISSION 2

REF. NO.	PART NO. N° PIECES	DESCRIPTION DESCRIPTION	6ALL	6ASK	6AML	6ATK		REMARKS REMARQUES
1	90445–09040	HOSE (L50) DURITE (L50)	1	1	1	1		
2	6P2–12484–01	PIPE 4 DURITE 4	1	1	1	1		
3	6CE–24376–01	PIPE, JOINT 1 DURITE 1, RACCORDEMENT	2	2	2	2		
4	90465–11M10	CLAMP BRIDE	5	5	5	5		
5	90467–09M03	CLIP JONC	1	1	1	1		
6	6P2–12482–00	PIPE 2 DURITE 2	1	1	1	1		
7	6E5–21744–00	BREATHER RENIFLARD	1	1	1	1		
8	6P2–12483–00	PIPE 3 DURITE 3	1	1	1	1		
9	90446–10M01	HOSE (L60) DURITE (L60)	1	1	1	1		
10	90464–60067	CLAMP BRIDE	1	1	1	1		
11	90465–11M10	CLAMP BRIDE	3	3	3	3		
12	90445–09041	HOSE (L500) DURITE (L500)	1	1	1	1		
13	90445–09224	HOSE (L270) DURITE (L270)	1	1	1	1		
14	90445–09097	HOSE (L250) DURITE (L250)	1	1	1	1		
15	90445–09220	HOSE (L30) DURITE (L30)	1	1	1	1		
16	6P2–12485–00	PIPE 5 DURITE 5	1	1	1	1		
17	6P2–1248A–00	PIPE 8 DURITE 8	1	1	1	1		
18	6P2–1248E–00	PIPE 9 DURITE	1	1	1	1		
19	6P2–14752–00	PIPE, OUTLET PMBOUT DE SILENCIEUX	1	1	1	1		
20	61A–24316–00	PIPE 6 DURITE 6	1	1	1	1		
21	688–24378–00	PIPE, JOINT 3 DURITE RACCORDEMENT 3	1	1	1	1		
22	688–24378–00	PIPE, JOINT 3 DURITE RACCORDEMENT 3	1	1	1	1		
23	688–24378–00	PIPE, JOINT 3 DURITE RACCORDEMENT 3	1	1	1	1		
24	688–24378–00	PIPE, JOINT 3 DURITE RACCORDEMENT 3	1	1	1	1		
25	688–24378–00	PIPE, JOINT 3 DURITE RACCORDEMENT 3	1	1	1	1		
26	90464–09013	CLAMP BRIDE	1	1	1	1		
27	90465–11M10	CLAMP BRIDE	2	2	2	2		

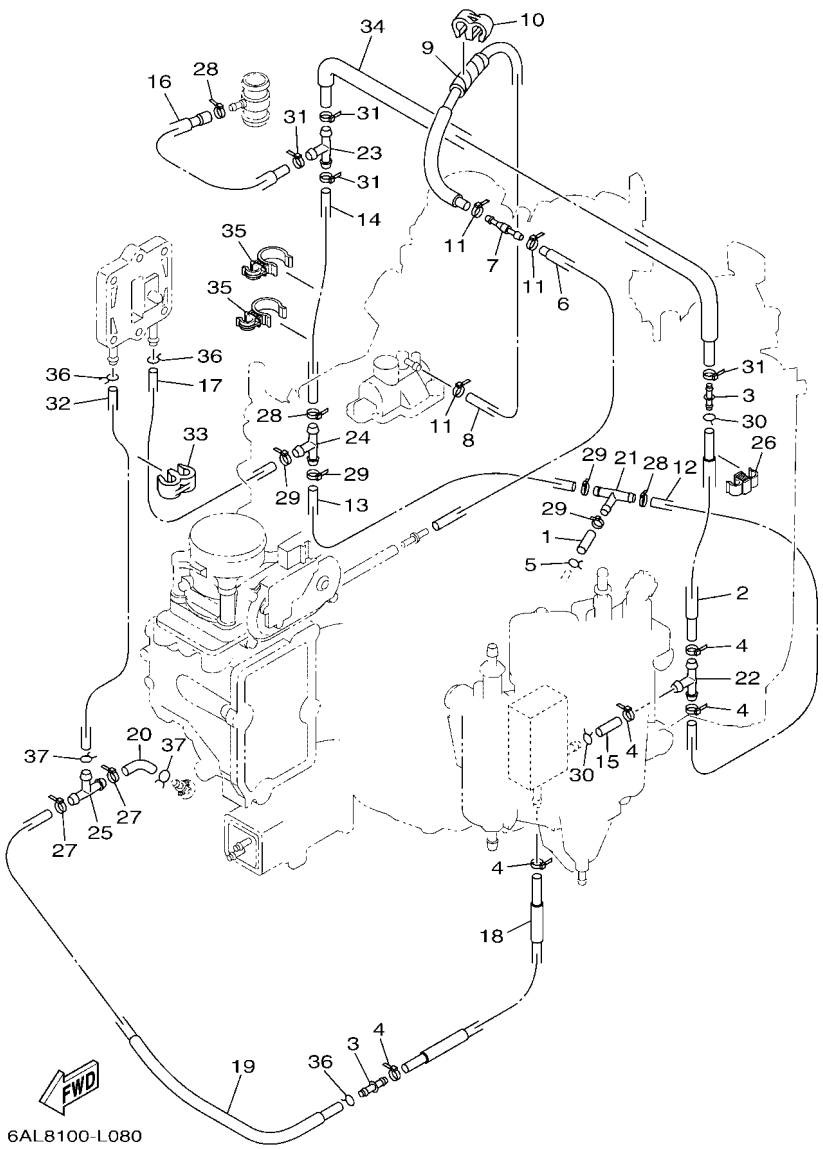

FIG. 9 INTAKE 2 — ADMISSION 2

REF. NO.	PART NO. N° PIECES	DESCRIPTION DESCRIPTION	6ALL	6ASK	6AML	6ATK		REMARKS REMARQUES
28	90465–11M10	CLAMP BRIDE	3	3	3	3		
29	90465–11M10	CLAMP BRIDE	4	4	4	4		
30	90467–08M18	CLIP JONC	2	2	2	2		
31	90465–11M10	CLAMP BRIDE	4	4	4	4		
32	90445–09304	HOSE (L310) DURITE (L310)	1	1	1	1		
33	90464–60067	CLAMP BRIDE	1	1	1	1		
34	6P2–12481–12	PIPE 1 DURITE 1	1	1	1	1		
35	90464–21002	CLAMP BRIDE	2	2	2	2		
36	90467–08M18	CLIP JONC	3	3	3	3		
37	90467–09M09	CLIP JONC	2	2	2	2		

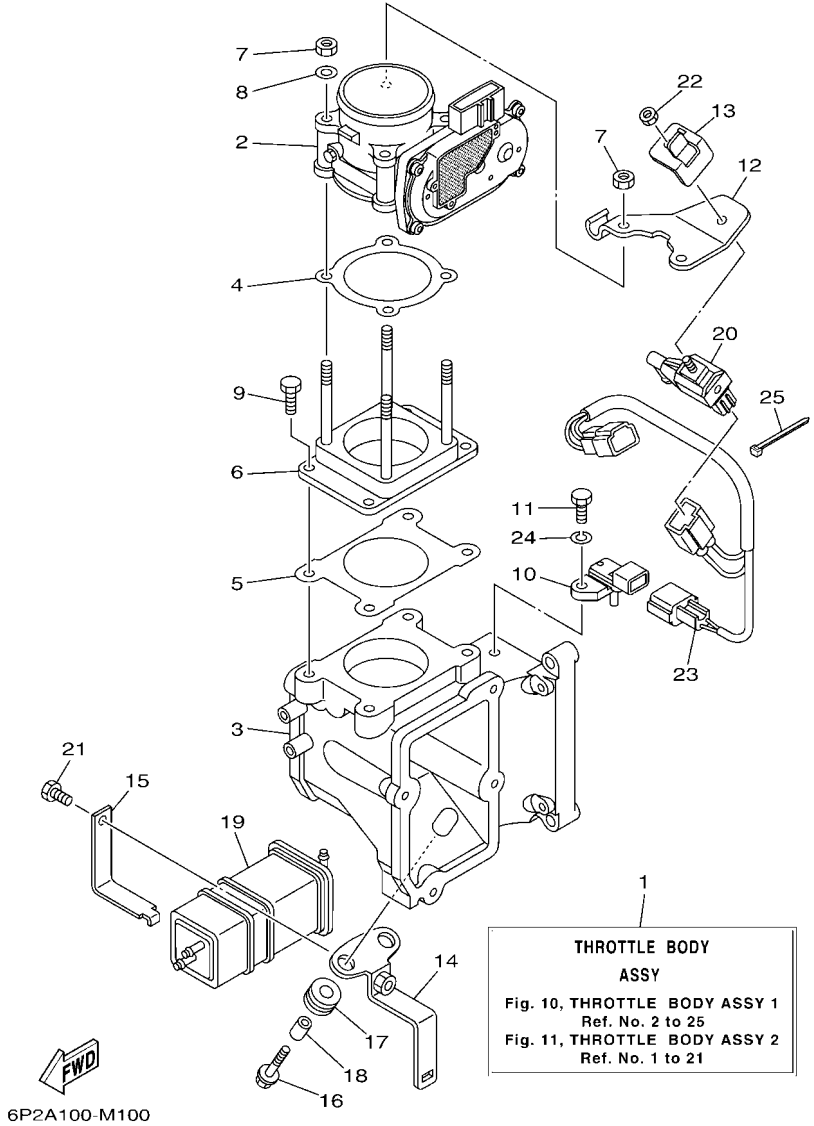

FIG. 10 THROTTLE BODY ASSY 1 — CARTER D'ACCELERATEUR 1

REF. NO.	PART NO. N° PIECES	DESCRIPTION DESCRIPTION	6ALL	6ASK	6AML	6ATK		REMARKS REMARQUES
1	6P2–13750–14	THROTTLE BODY ASSY CARTER D'ACCELERATEUR COMPLET	1	1	1	1		
2	6P2–13751–04	BODY, THROTTLE 1 CARTER 1	1	1	1	1		
3	6P2–13711–00	MIXING BODY CHAMBRE DE MELANGE	1	1	1	1		
4	6P2–13556–00	GASKET, MANIFOLD JOINT, TUBULURE	1	1	1	1		
5	6P2–13557–00	GASKET JOINT	1	1	1	1		
6	6P2–14360–00	THROTTLE DAMPER ASSY AMORIISSEUR D'ACCELERATEUR	1	1	1	1		
7	6P2–13588–01	NUT ECROU	4	4	4	4		
8	6P2–13578–00	WASHER RONDELLE	2	2	2	2		
9	6P2–14496–00	BOLT BOULON	4	4	4	4		
10	6P2–82380–00	SENSOR, PRESSURE SONDE DE PRESSION	1	1	1	1		
11	6P2–13573–00	BOLT 1 BOULON 1	1	1	1	1		
12	6P2–14255–00	PLATE PLAQUE	1	1	1	1		
13	6P2–14159–00	CLIP JONC	1	1	1	1		
14	6P2–2134X–00	BRACKET, CANISTER SUPPORT	1	1	1	1		
15	6P2–2419A–00	HOLDER SUPPORT	1	1	1	1		
16	90119–06289	BOLT, WITH WASHER BOULON, AVEC RONDELLE	2	2	2	2		
17	90480–10M23	GROMMET PASSE-FIL	2	2	2	2		
18	90387–06289	COLLAR COLLERETTE	2	2	2	2		
19	6P2–24170–00	CANISTER ASSY BANDE, RASERVOIR A ESSENCE	1	1	1	1		
20	6C5–86120–00	SOLENOID VALVE ASSY SOLENOIDE	1	1	1	1		
21	6P2–13574–00	BOLT 2 BOULON 2	1	1	1	1		
22	69J–14164–00	NUT, HOLDING ECROU, FIXATION	1	1	1	1		
23	6P2–8258A–00	EXTENSION, WIRE HARNESS EXTENSION, FAISCEAU DE FILS	1	1	1	1		
24	68V–14356–00	WASHER, SPRING RONDELLE	1	1	1	1		
25	68V–2481H–00	CLAMP BRIDE	1	1	1	1		

FIG. 11 THROTTLE BODY ASSY 2 — CARTER D'ACCELERATEUR 2

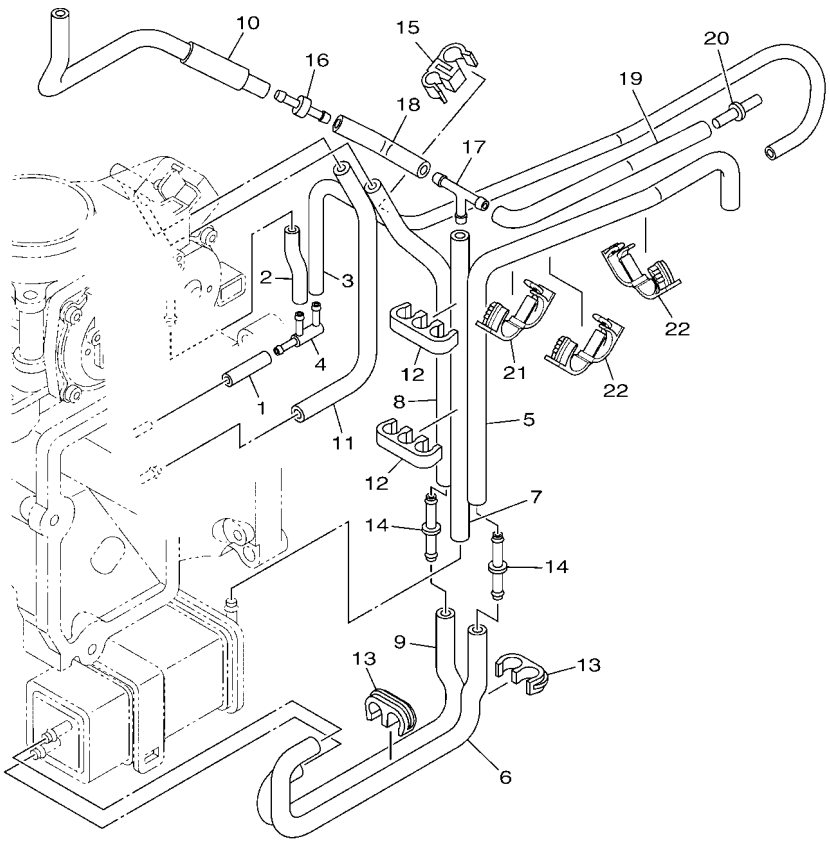

6P28110-L100

REF. NO.	PART NO. N° PIECES	DESCRIPTION DESCRIPTION	6ALL	6ASK	6AML	6ATK		REMARKS REMARQUES
1	6P2–14349–00	PIPE DURITE	1	1	1	1		
2	6P2–13533–00	HOSE, VACUUM SENSING 4 DURITE 4	1	1	1	1		
3	6P2–13532–10	HOSE, VACUUM SENSING 3 DURITE 3	1	1	1	1		
4	6P2–13595–00	JOINT RACCORD	1	1	1	1		
5	6P2–1475A–10	PIPE 1 DURITE 1	1	1	1	1		
6	6P2–1475E–00	PIPE 2 DURITE	1	1	1	1		
7	6P2–13545–00	HOSE 1 DURITE 1	1	1	1	1		
8	6P2–1475F–00	PIPE 3 DURITE 3	1	1	1	1		
9	6P2–1475G–00	PIPE 4 DURITE 4	1	1	1	1		
10	6P2–13546–00	HOSE 2 DURITE 2	1	1	1	1		
11	6P2–2416A–00	HOSE DURITE	1	1	1	1		
12	6P2–24135–00	CLAMP 1 COLLIER 1	2	2	2	2		
13	6P2–24136–00	CLAMP 2 COLLIER 2	2	2	2	2		
14	6P2–13758–00	PIPE, JOINT DURITE	2	2	2	2		
15	6P2–24137–00	CLAMP 3 COLLIER 3	1	1	1	1		
16	6E5–21744–00	BREATHER RENIFLARD	1	1	1	1		
17	688–24378–00	PIPE, JOINT 3 DURITE RACCORDEMENT 3	1	1	1	1		
18	6P2–13547–00	HOSE 3 DURITE 3	1	1	1	1		
19	6P2–13548–10	HOSE, AIR 4 DURITE, A AIR 4	1	1	1	1		
20	6P2–24376–00	PIPE, JOINT 1 DURITE 1, RACCORDEMENT	1	1	1	1		
21	90464–18004	CLAMP BRIDE	1	1	1	1		
22	90464–18004	CLAMP BRIDE	2	2	2	2		

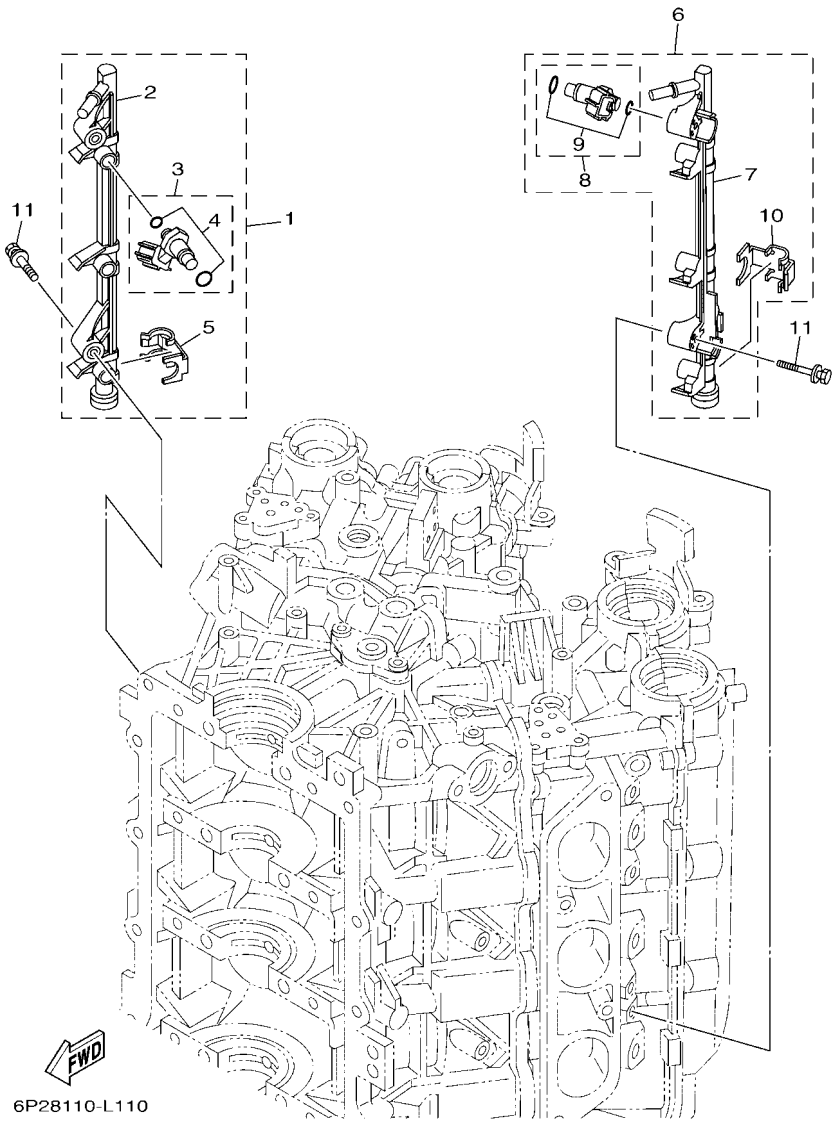

FIG. 12 THROTTLE BODY ASSY 3 — CARTER D'ACCELERATEUR 3

REF. NO.	PART NO. N° PIECES	DESCRIPTION DESCRIPTION	6ALL	6ASK	6AML	6ATK		REMARKS REMARQUES
1	6P2–13160–11	DELIVERY PIPE ASSY 1 ENS. TUBE DE REFOULEMENT 1	1	1	1	1		
2	6P2–13161–00	.PIPE, DELIVERY 1 .DURITE REFOULEMENT 1	1	1	1	1		
3	6P2–13761–11	.INJECTOR .INJECTEUR	3	3	3	3		
4	6C5–1410B–00	..PACKING KIT ..POCHETTE DE JOINTS	1	1	1	1		
5	6P2–13577–00	.CLIP .AGRAFE	3	3	3	3		
6	6P2–13170–11	DELIVERY PIPE ASSY 2 ENS. TUBE DE REFOULEMENT 2	1	1	1	1		
7	6P2–13171–00	.PIPE, DELIVERY 2 .DURITE REFOULEMENT	1	1	1	1		
8	6P2–13761–11	.INJECTOR .INJECTEUR	3	3	3	3		
9	6C5–1410B–00	..PACKING KIT ..POCHETTE DE JOINTS	1	1	1	1		
10	6P2–13577–00	.CLIP .AGRAFE	3	3	3	3		
11	90119–06296	BOLT, WITH WASHER BOULON, AVEC RONDELLE	4	4	4	4		

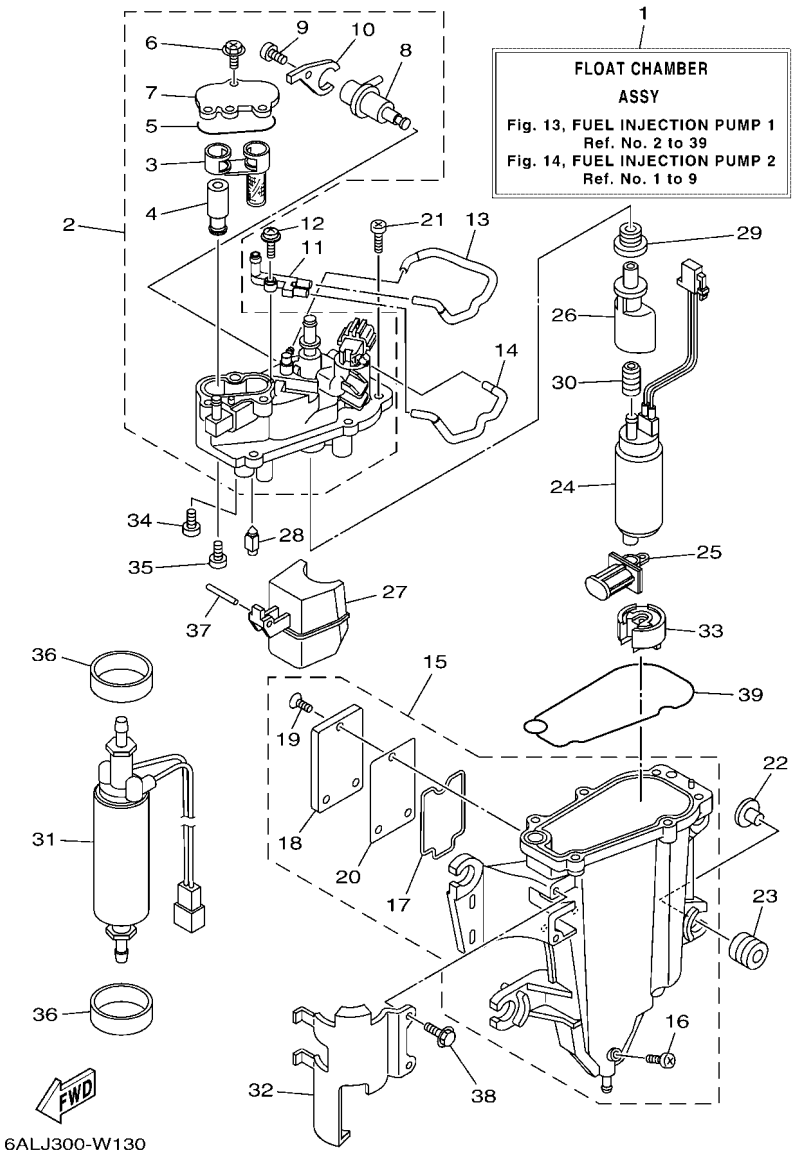

FIG. 13 FUEL INJECTION PUMP 1 POMPE A INJECTEUR 1

REF. NO.	PART NO. N° PIECES	DESCRIPTION DESCRIPTION	6ALL	6ASK	6AML	6ATK		REMARKS REMARQUES
1	6P2–14180–57	FLOAT CHAMBER ASSY CUVE DE FLOTTEUR	1	1	1	1		
2	6AW–14182–11	COVER, FLOAT CHAMBER COUVERCLE, CUVE DE FLOTTEUR	1	1	1	1		
3	6CB–24501–01	.FILTER, FUEL .FILTRE	1	1	1	1		
4	6CB–24460–00	.RELIEF VALVE ASSY .SOUPAPE DE SECURITE COMPLET	1	1	1	1		
5	6CB–13016–00	.O-RING .JOINT TORIQUE	1	1	1	1		
6	6CB–14216–00	.SCREW .VIS	3	3	3	3		
7	6CB–24217–00	.COVER .COUVERCLE	1	1	1	1		
8	6CB–13906–01	.REGULATOR, PRESSURE .REGULATEUR DE PRESSION	1	1	1	1		
9	6CB–14564–00	.SCREW .VIS	1	1	1	1		
10	6CB–14146–00	.PLATE .PLAQUE	1	1	1	1		
11	68V–24379–10	PIPE, JOINT 4 DURITE RACCORDEMENT 4	1	1	1	1		
12	68V–14216–00	SCREW VIS	1	1	1	1		
13	68V–1475H–00	PIPE 5 DURITE 5	1	1	1	1		
14	68V–1475J–00	PIPE 6 DURITE 6	1	1	1	1		
15	6AW–14181–11	BODY, FLOAT CHAMBER 1 CORPS, CUVE DE FLOTTEUR 1	1	1	1	1		
16	6P2–14191–00	.PLUG, DRAIN .PLOT, VIDANGE	1	1	1	1		
17	6CB–14239–00	.SEAL .JOINT	1	1	1	1		
18	6CB–24452–10	.COVER .COUVERCLE	1	1	1	1		
19	6CB–14429–01	.SCREW .VIS	3	3	3	3		
20	6CB–24482–00	.GASKET 1 .JOINT 1	1	1	1	1		
21	63P–14567–00	SCREW VIS	6	6	6	6		
22	63P–13716–00	COLLAR COLLERETTE	4	4	4	4		
23	6CB–13593–00	DAMPER AMORTISSEUR	4	4	4	4		
24	6P2–13907–22	FUEL PUMP COMP. POMPE A CARBURANT COMP.	1	1	1	1		
25	63P–13915–00	FILTER FILTRE	1	1	1	1		
26	6KA–13132–00	JOINT RACCORD	1	1	1	1		
27	6CB–14985–00	FLOAT FLOTTEUR	1	1	1	1		

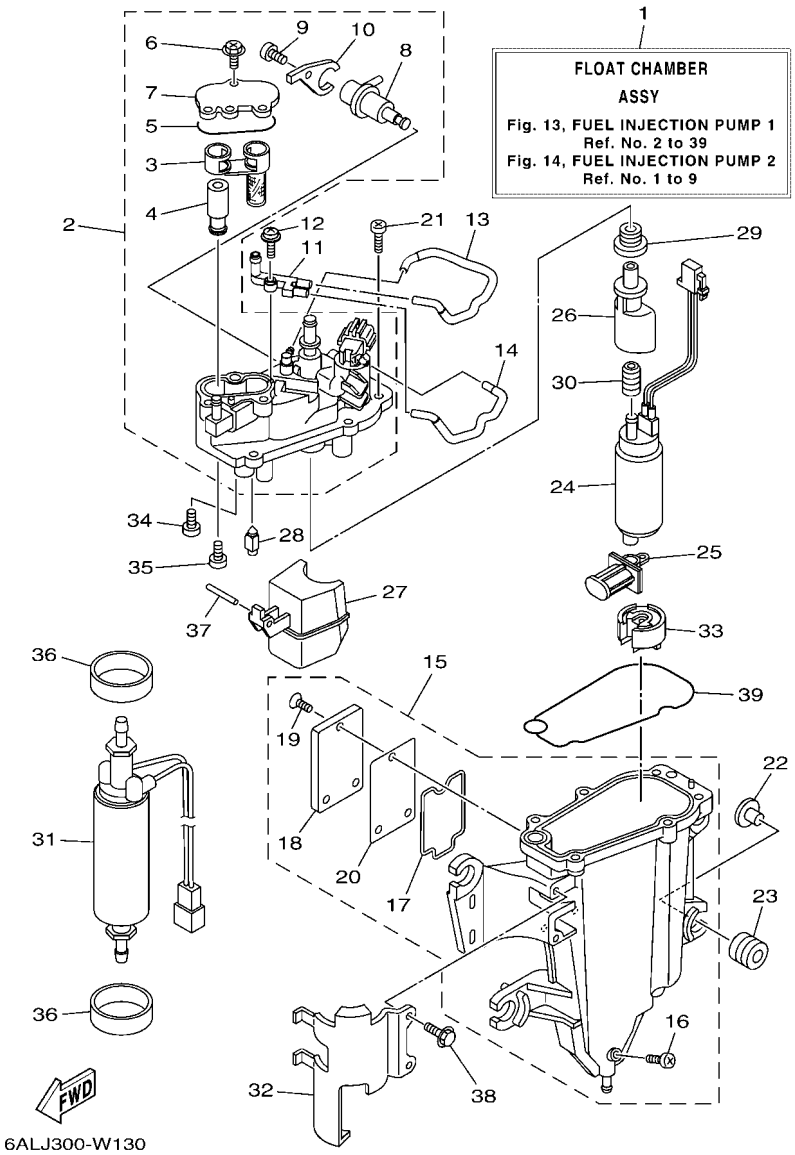

FIG. 13 FUEL INJECTION PUMP 1 POMPE A INJECTEUR 1

REF. NO.	PART NO. N° PIECES	DESCRIPTION DESCRIPTION	6ALL	6ASK	6AML	6ATK		REMARKS REMARQUES
28	6CB–14546–00	VALVE, NEEDLE POINTEAU	1	1	1	1		
29	6LH–1447B–00	BUSH 1 DOUILLE 1	1	1	1	1		
30	6AW–13781–00	DAMPER, PUMP AMORTISSEUR, POMPE	1	1	1	1		
31	6GR–24410–02	FUEL PUMP ASSY POMPE A ESSENCE	1	1	1	1		
32	6AW–24491–10	BRACKET, FUEL PUMP SUPPORT, POMPE A ESSENCE	1	1	1	1		
33	6AW–13784–00	COVER, PUMP COUVERCLE, POMPE	1	1	1	1		
34	4SV–24453–00	SCREW VIS	1	1	1	1		
35	98507–04008	SCREW, PAN HEAD VIS, TETE TRONCONIQUE	1	1	1	1		
36	6CB–24492–00	BUSH, FUEL PUMP BAGUE	2	2	2	2		
37	6P2–14386–00	PIN, FLOAT AXE, FLOTTEUR	1	1	1	1		
38	6CB–24592–00	BOLT BOLTE	2	2	2	2		
39	6CB–14984–00	GASKET, FLOAT CHAMBER JOINT, CUVE DE FLOTTEUR	1	1	1	1		

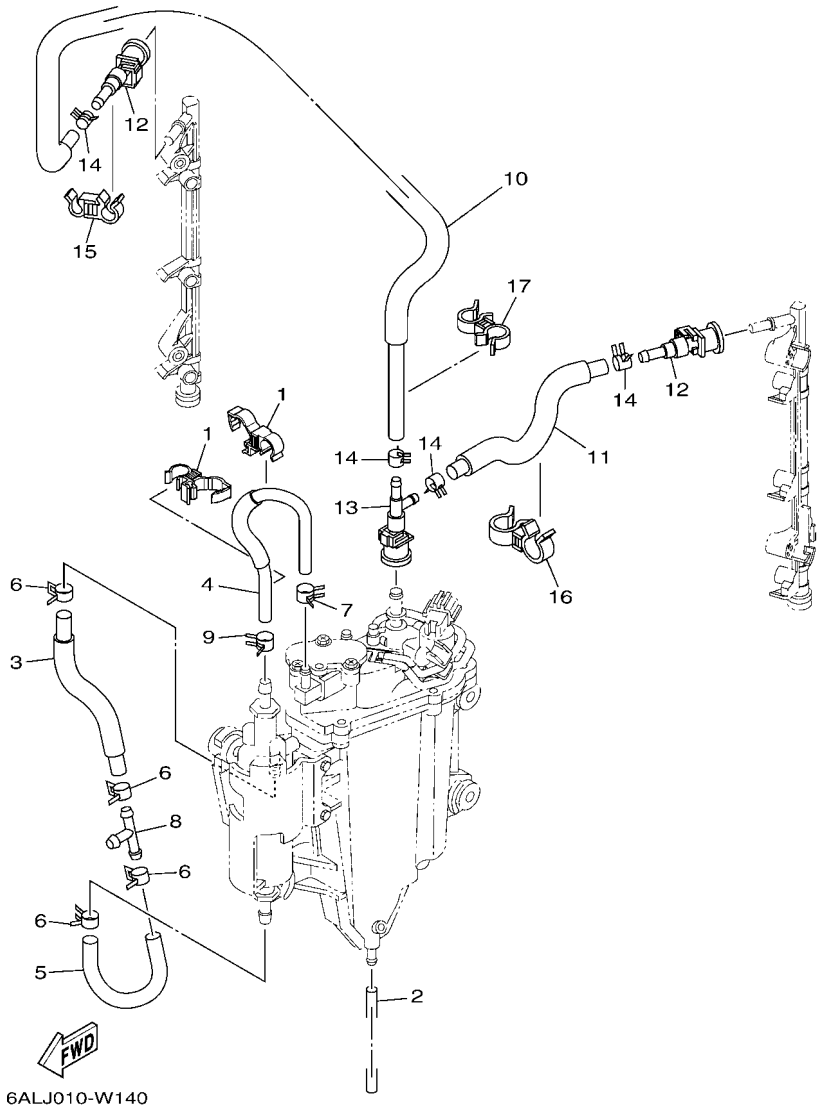

FIG. 14 FUEL INJECTION PUMP 2 — POMPE A INJECTEUR 2

REF. NO.	PART NO. N° PIECES	DESCRIPTION DESCRIPTION	6ALL	6ASK	6AML	6ATK		REMARKS REMARQUES
1	90464–12012	CLAMP BRIDE	2	2	2	2		
2	6P2–14149–00	PIPE DURITE	1	1	1	1		
3	6AW–24323–20	PIPE 12 DURITE 12	1	1	1	1		
4	6AW–24324–30	PIPE 13 DURITE 13	1	1	1	1		
5	6AW–24317–20	PIPE 7 DURITE 7	1	1	1	1		
6	90467–141A2	CLIP JONC	4	4	4	4		
7	68V–13577–01	CLIP AGRAFE	1	1	1	1		
8	6E5–24378–00	PIPE, JOINT 3 DURITE, RACCORDEMENT 3	1	1	1	1		
9	90467–140A9	CLIP JONC	1	1	1	1		
10	6P2–13973–30	PIPE, FUEL 3 TUBE 3, CARBURANT	1	1	1	1		
11	6P2–13974–30	PIPE, FUEL 4 TUBE 4, CARBURANT	1	1	1	1		
12	6AW–24300–11	FUEL PIPE JOINT DURITE RACCORDEMT. A ESSENCE	2	2	2	2		
13	6P2–24300–01	FUEL PIPE JOINT DURITE RACCORDEMT. A ESSENCE	1	1	1	1		
14	68V–13577–01	CLIP AGRAFE	4	4	4	4		
15	90464–12010	CLAMP BRIDE	1	1	1	1		
16	90464–18005	CLAMP BRIDE	1	1	1	1		
17	90464–12009	CLAMP BRIDE	1	1	1	1		

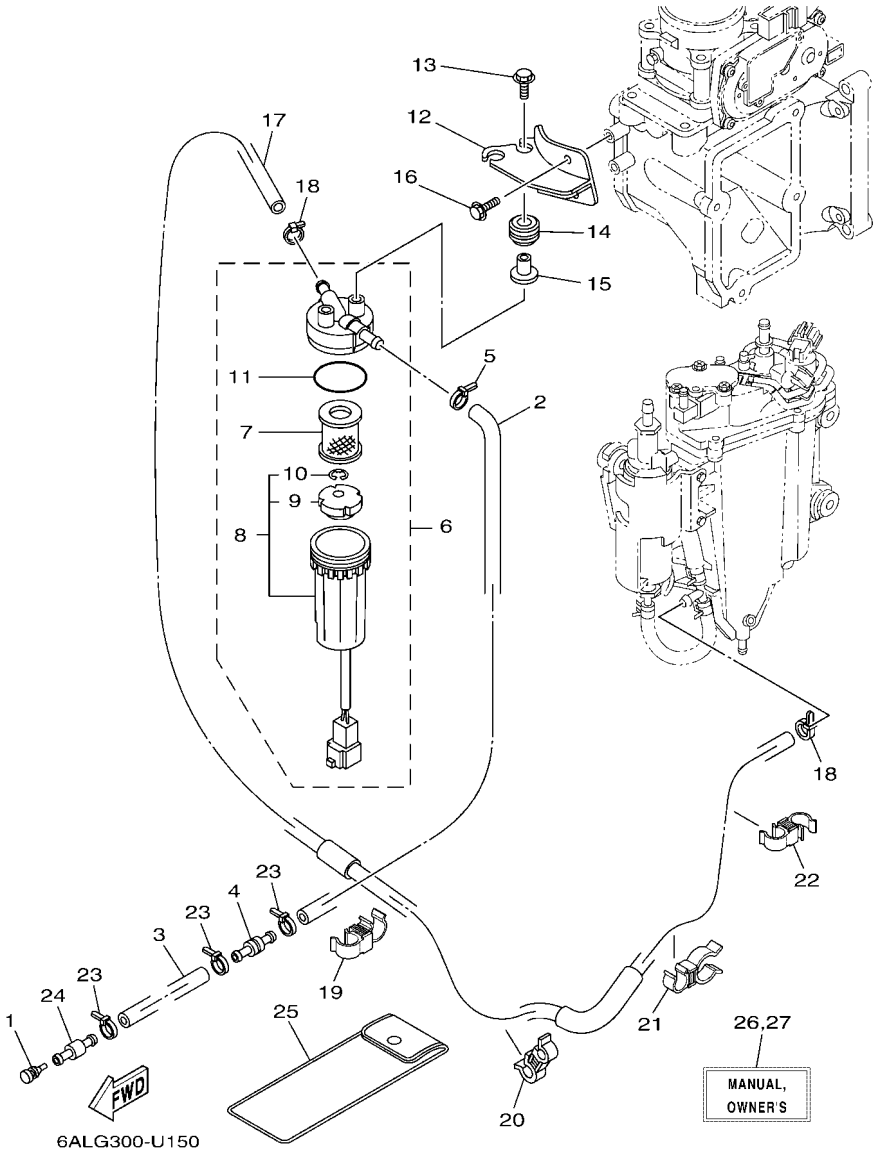

FIG. 15 FUEL 1 — CARBURANT 1

REF. NO.	PART NO. N° PIECES	DESCRIPTION DESCRIPTION	6ALL	6ASK	6AML	6ATK		REMARKS REMARQUES
1	689–85547–01	DAMPER AMORTISSEUR	1	1	1	1		
2	6P2–24314–00	PIPE 4 DURITE 4	1	1	1	1		
3	90445–13511	HOSE (L2000) DURITE (L2000)	1	1	1	1		
4	6R3–24377–10	PIPE, JOINT 2 DURITE RACCORDEMENT 2	1	1	1	1		
5	90465–11M10	CLAMP BRIDE	1	1	1	1		
6	6P3–24560–04	FILTER ASSY ENS FILTRE	1	1	1	1		
7	6P3–24563–02	.ELEMENT, FILTER .ELEMENT, FILTRE	1	1	1	1		
8	6P3–24562–03	.CUP, FILTER .CUVETTE, FILTRE	1	1	1	1		
9	6P3–24469–00	..FLOAT, WATER LEVEL ..FLOTTEUR	1	1	1	1		
10	6P3–24519–00	..CLIP ..JONC	1	1	1	1		
11	6P3–24564–00	.GASKET .JOINT	1	1	1	1		
12	6P2–24566–11	BRACKET, FILTER SUPPORT, FILTRE	1	1	1	1		
13	90119–06309	BOLT, WITH WASHER BOULON, AVEC RONDELLE	2	2	2	2		
14	90480–14018	GROMMET PASSE-FIL	2	2	2	2		
15	90387–06289	COLLAR COLLERETTE	2	2	2	2		
16	97E95–06514	BOLT, HEXAGON W/W DEEP RECESS VIS HEXAGONAL AVC RONDELLE	2	2	2	2		
17	6P2–24313–50	PIPE 3 DURITE 3	1	1	1	1		
18	90465–11M10	CLAMP BRIDE	2	2	2	2		
19	90464–12009	CLAMP BRIDE	1	1	1	1		
20	90464–12010	CLAMP BRIDE	1	1	1	1		
21	90464–20024	CLAMP BRIDE	1	1	1	1		
22	90464–12009	CLAMP BRIDE	1	1	1	1		
23	90465–11M10	CLAMP BRIDE	3	3	3	3		
24	6R3–24377–00	PIPE, JOINT 2 DURITE RACCORDEMENT 2	1	1	1	1		
25	69J–28100–03	TOOL KIT TROUSSE A OUTILS	1	1	1	1		AP AP
26	6P2–28199–7L–E0	MANUAL,OWNER'S MANUEL D'UTILISATION	1	1		1		UR (E) UR (E)
	6P2–28199–7L–F0	MANUAL,OWNER'S MANUEL D'UTILISATION	1	1		1		UR (F) UR (F)

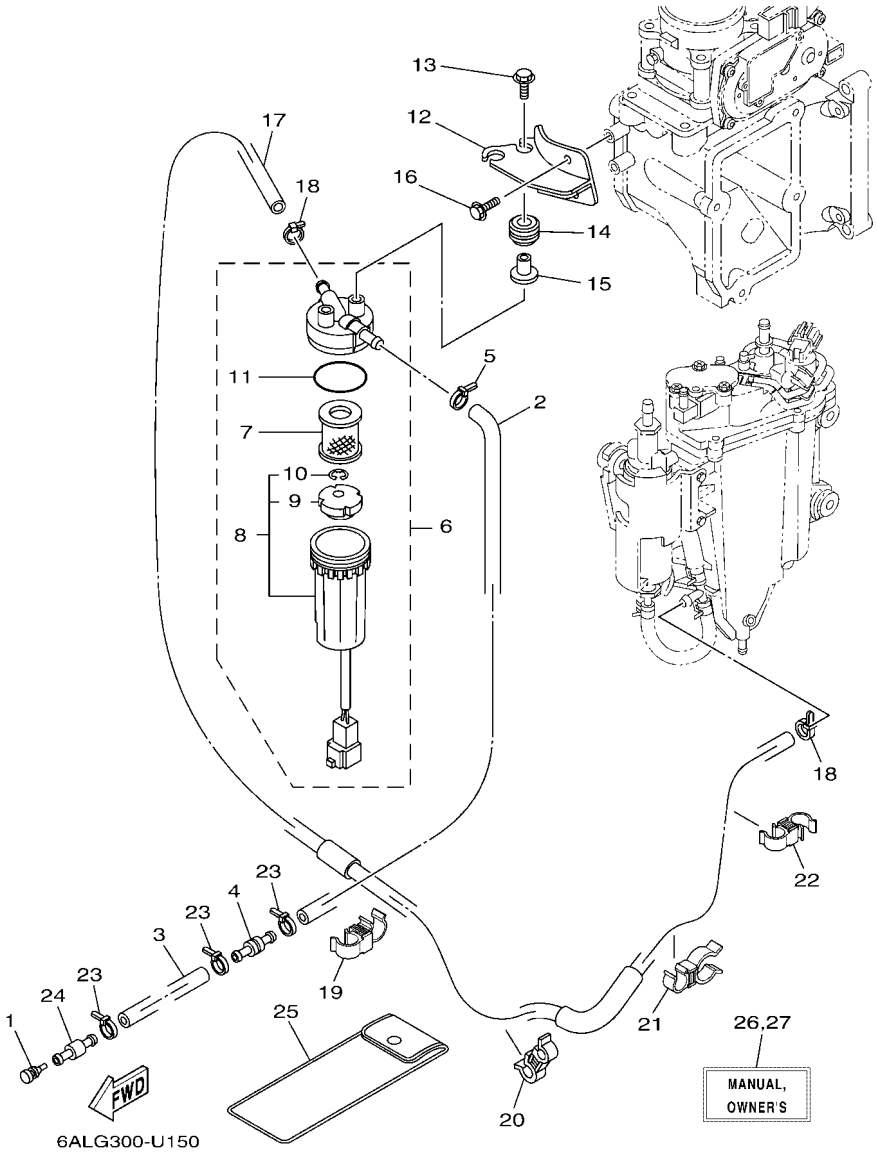

FIG. 15 FUEL 1 — CARBURANT 1

REF. NO.	PART NO. N° PIECES	DESCRIPTION DESCRIPTION	6ALL	6ASK	6AML	6ATK		REMARKS REMARQUES
26	6P2–28199–7L–S0	MANUAL,OWNER'S MANUEL D'UTILISATION	1	1		1		UR (ES) UR (ES)
	6P2–28199–7L–G0	MANUAL,OWNER'S MANUEL D'UTILISATION	1	1		1		UR (D) UR (D)
	6P2–28199–7L–D0	MANUAL,OWNER'S MANUEL D'UTILISATION	1	1		1		UR (NL) UR (NL)
	6P2–28199–7L–H0	MANUAL,OWNER'S MANUEL D'UTILISATION	1	1		1		UR (I) UR (I)
27	6P2–28199–8L–K0	MANUAL,OWNER'S MANUEL D'UTILISATION	1	1		1		UR (DK) UR (DK)
	6P2–28199–8L–R0	MANUAL,OWNER'S MANUEL D'UTILISATION	1	1		1		UR (GR) UR (GR)
	6P2–28199–8L–P0	MANUAL,OWNER'S MANUEL D'UTILISATION	1	1		1		UR (P) UR (P)
	6P2–28199–8L–N0	MANUAL,OWNER'S MANUEL D'UTILISATION	1	1		1		UR (N) UR (N)
	6P2–28199–8L–M0	MANUAL,OWNER'S MANUEL D'UTILISATION	1	1		1		UR (S) UR (S)
	6P2–28199–8L–L0	MANUAL,OWNER'S MANUEL D'UTILISATION	1	1		1		UR (SF) UR (SF)

FIG. 16 FUEL 2 — CARBURANT 2

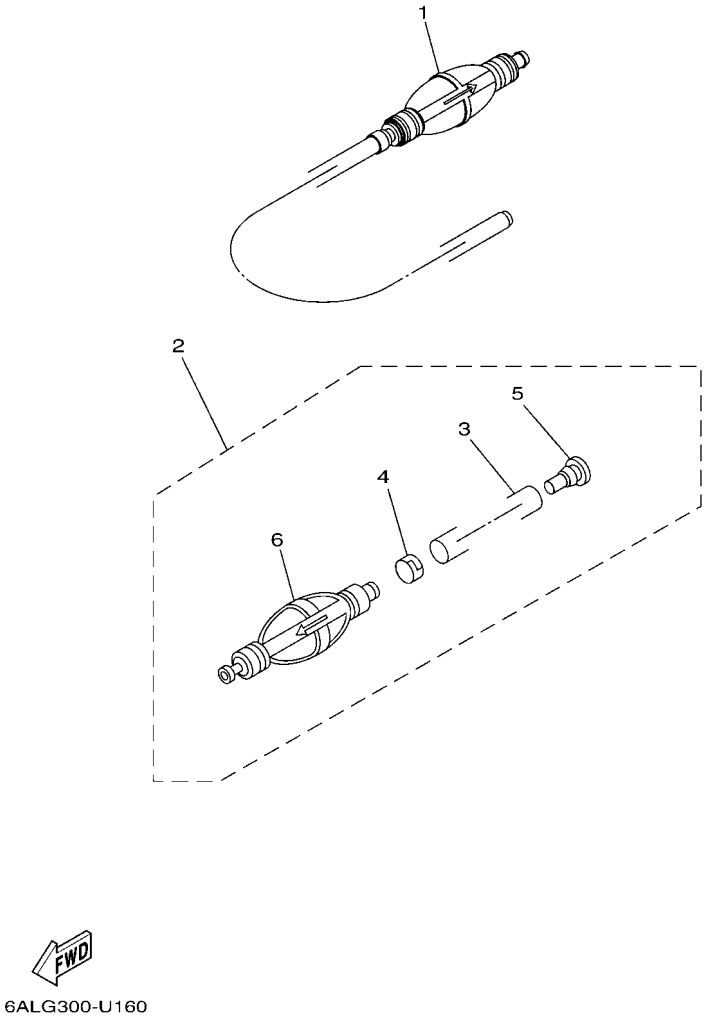

REF. NO.	PART NO. N° PIECES	DESCRIPTION DESCRIPTION	6ALL	6ASK	6AML	6ATK		REMARKS REMARQUES
1	6YK–24307–43	FUEL PIPE COMP. 2 DURITE A ESSENCE 2	1	1		1		AP EXCEPT FOR RUS AP EXCEPT FOR RUS
2	6Y2–24307–52	FUEL PIPE COMP. 2 DURITE A ESSENCE 2	1		1			AP FOR RUS AP FOR RUS
3	90445–13M25	.HOSE (L2050) .DURITE (L2050)	1		1			
4	6E5–24351–51	.BAND 1 .COLLIER 1	1		1			
5	90480–06M19	.GROMMET .PASSE-FIL	1		1			
6	6Y2–24360–60	.PRIMER PUMP ASSY .POMPE D'AMORCAGE	1		1			

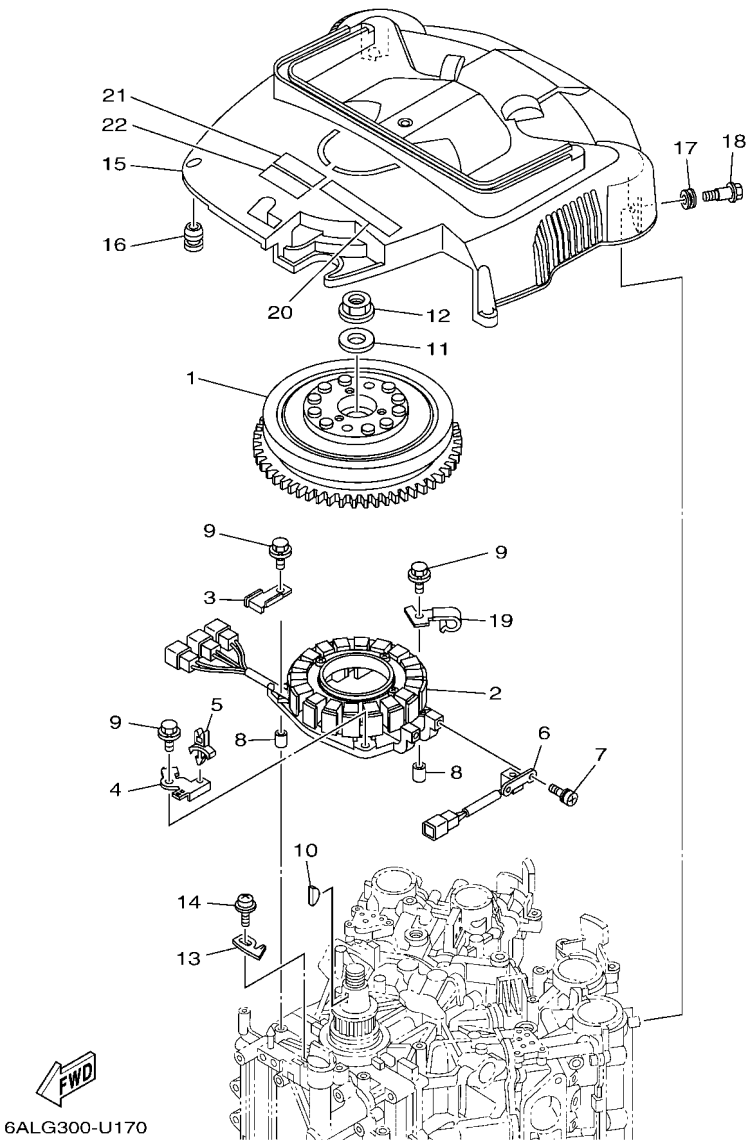

FIG. 17 GENERATOR — GENERATRICE

REF. NO.	PART NO. N° PIECES	DESCRIPTION DESCRIPTION	6ALL	6ASK	6AML	6ATK		REMARKS REMARQUES
1	6P2–81450–00	ROTOR ASSY ROTOR COMPLET	1	1	1	1		
2	6P2–81460–00	BASE ASSY ENS. FLASQUE	1	1	1	1		
3	6P2–81443–00	CLAMP, LEAD 1 BRIDE, FIL 1	1	1	1	1		
4	6P2–8257V–00	PLATE, CONNECTOR PLAQUE, CONNECTEUR	1	1	1	1		
5	90464–06001	CLAMP BRIDE	1	1	1	1		
6	6P2–85580–00	COIL, PULSER BOBINE, PULSEUR	1	1	1	1		
7	97980–05312	SCREW, WITH WASHER VIS, AVEC RONDELLE	2	2	2	2		
8	99530–08012	PIN, DOWEL GOUJON, D'ASSEMBLAGE	2	2	2	2		
9	97E95–06635	BOLT, HEXAGON W/W DEEP RECESS VIS HEXAGONAL AVC RONDELLE	4	4	4	4		
10	90280–05015	KEY, WOODRUFF CLAVETTE, DEMI-LUNE	1	1	1	1		
11	90201–24014	WASHER, PLATE RONDELLE, PLATE	1	1	1	1		
12	90179–24002	NUT ECROU	1	1	1	1		
13	6P2–81332–00	PLATE, TIMING PLATEAU, ALLUMAGE	1	1	1	1		
14	97985–06210	SCREW, WITH WASHER VIS, AVEC RONDELLE	1	1	1	1		
15	6P2–81337–02	COVER, FLYWHEEL COUVERCLE, VOLANT	1	1	1	1		
16	663–82317–02	DAMPER, IGNITION COIL AMORTISSEUR, BOBINE D'ALLUM	4	4	4	4		
17	90480–12314	GROMMET PASSE-FIL	2	2	2	2		
18	90109–06MA1	BOLT BOULON	2	2	2	2		
19	6P2–81128–00	CLAMP BRIDE	1	1	1	1		
20	60L–13437–63	MARK, CAUTION MAKER	1	1	1	1		
21	6EE–81994–40	LABEL, SAFETY ETIQUETTE, SECURITE	1	1	1	1		
22	6EE–81994–50	LABEL, SAFETY ETIQUETTE, SECURITE	1	1	1	1		

FIG. 18 ELECTRICAL 1 — PARTIE ELECTRIQUE 1

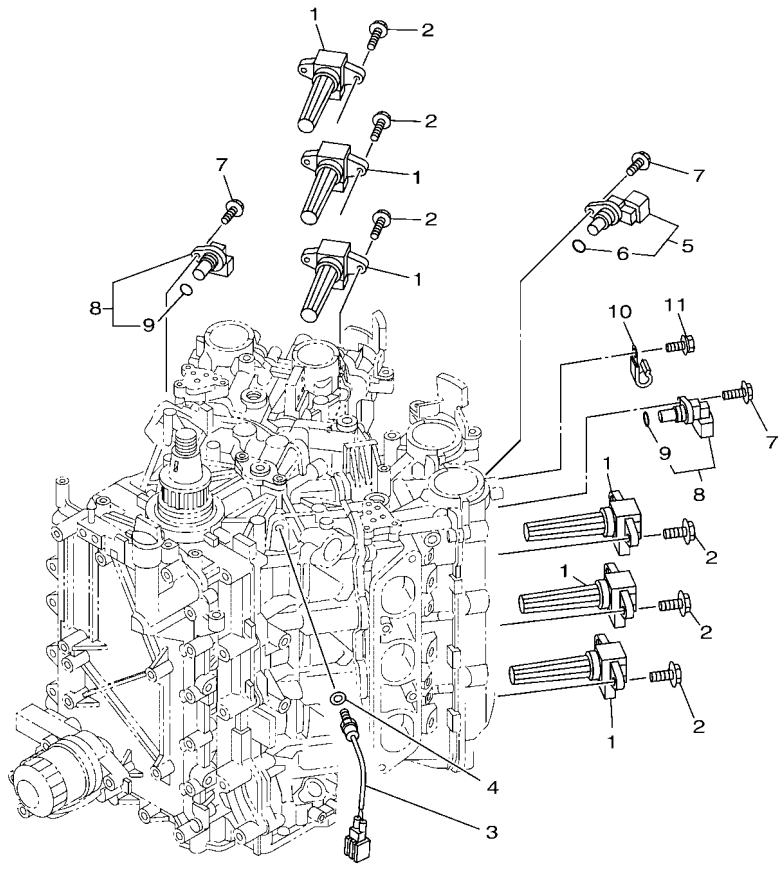

6ALD100-R180

REF. NO.	PART NO. N° PIECES	DESCRIPTION DESCRIPTION	6ALL	6ASK	6AML	6ATK		REMARKS REMARQUES
1	6P2–82310–03	IGNITION COIL ASSY BOBINE D'ALLUMAGE	6	6	6	6		
2	97E95–06520	BOLT, HEXAGON W/W DEEP RECESS VIS HEXAGONAL AVC RONDELLE	12	12	12	12		
3	61A–85790–01	THERMOSENSOR ASSY SENSITOMETRE	1	1	1	1		
4	92990–10600	WASHER, PLATE RONDELLE, PLATE	1	1	1	1		
5	6P2–85896–00	SENSOR, CAM POSITION SONDE DE CAME	1	1	1	1		
6	6P2–85075–00	.O-RING .JOINT TORIQUE	1	1	1	1		
7	97E95–06520	BOLT, HEXAGON W/W DEEP RECESS VIS HEXAGONAL AVC RONDELLE	3	3	3	3		
8	6P2–85897–00	SENSOR, CAM POSITION 2 SONDE DE CAME 2	2	2	2	2		
9	6P2–85075–00	.O-RING .JOINT TORIQUE	1	1	1	1		
10	90462–08032	CLAMP BRIDE	1	1	1	1		
11	97E95–06512	BOLT, HEXAGON W/W DEEP RECESS VIS HEXAGONAL AVC RONDELLE	1	1	1	1		

FIG. 19 ELECTRICAL 2 — PARTIE ELECTRIQUE 2

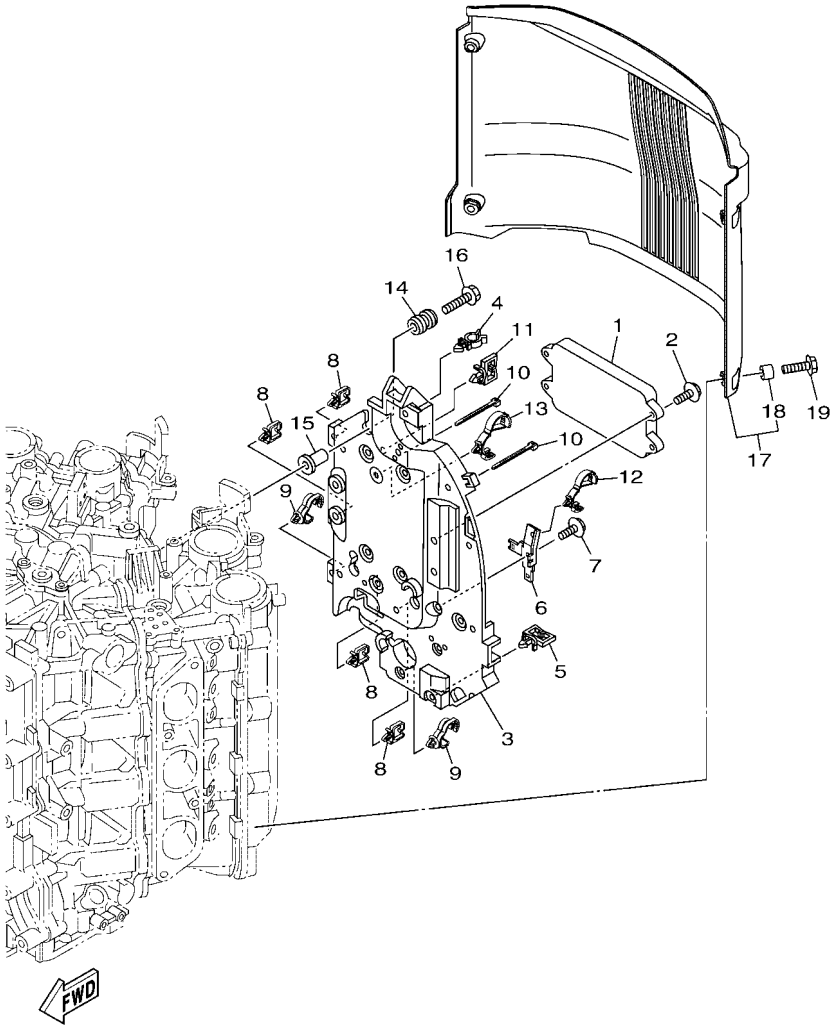

6ALG300-U190

REF. NO.	PART NO. N° PIECES	DESCRIPTION DESCRIPTION	6ALL	6ASK	6AML	6ATK		REMARKS REMARQUES
1	6AL–8591A–33	ENGINE CONTROL UNIT ASSY BLOC DE CONTROL	1		1			
	6AS–8591A–33	ENGINE CONTROL UNIT ASSY BLOC DE CONTROL		1		1		
2	97E95–06520	BOLT, HEXAGON W/W DEEP RECESS VIS HEXAGONAL AVC RONDELLE	4	4	4	4		
3	6P2–82316–01	BRACKET, IGNITION COIL SUPPORT, BOBINE D'ALLUMAGE	1	1	1	1		
4	90464–19M45	CLAMP BRIDE	1	1	1	1		
5	90464–23199	CLAMP BRIDE	1	1	1	1		
6	6P2–81845–10	PLATE PLAQUE	1	1	1	1		
7	97E95–06516	BOLT, HEXAGON W/W DEEP RECESS VIS HEXAGONAL AVC RONDELLE	1	1	1	1		
8	90464–08004	CLAMP BRIDE	4	4	4	4		
9	90464–13249	CLAMP BRIDE	2	2	2	2		
10	90465–14M66	CLAMP BRIDE	2	2	2	2		
11	90464–23199	CLAMP BRIDE	1	1	1	1		
12	90464–12183	CLAMP BRIDE	1	1	1	1		
13	90464–12183	CLAMP BRIDE	1	1	1	1		
14	6A0–82317–01	DAMPER, IGNITION COIL AMORTISSEUR, BOBINE D'ALLUM	4	4	4	4		
15	90387–06119	COLLAR COLLERETTE	4	4	4	4		
16	90119–06289	BOLT, WITH WASHER BOULON, AVEC RONDELLE	4	4	4	4		
17	6P2–82314–21	COVER, IGNITION COIL COUVERCLE, BOBINE D'ALLUMAGE	1	1	1	1		
18	90387–06044	.COLLAR .COLLERETTE	4	4	4	4		
19	90119–06M92	BOLT, WITH WASHER BOULON, AVEC RONDELLE	4	4	4	4		

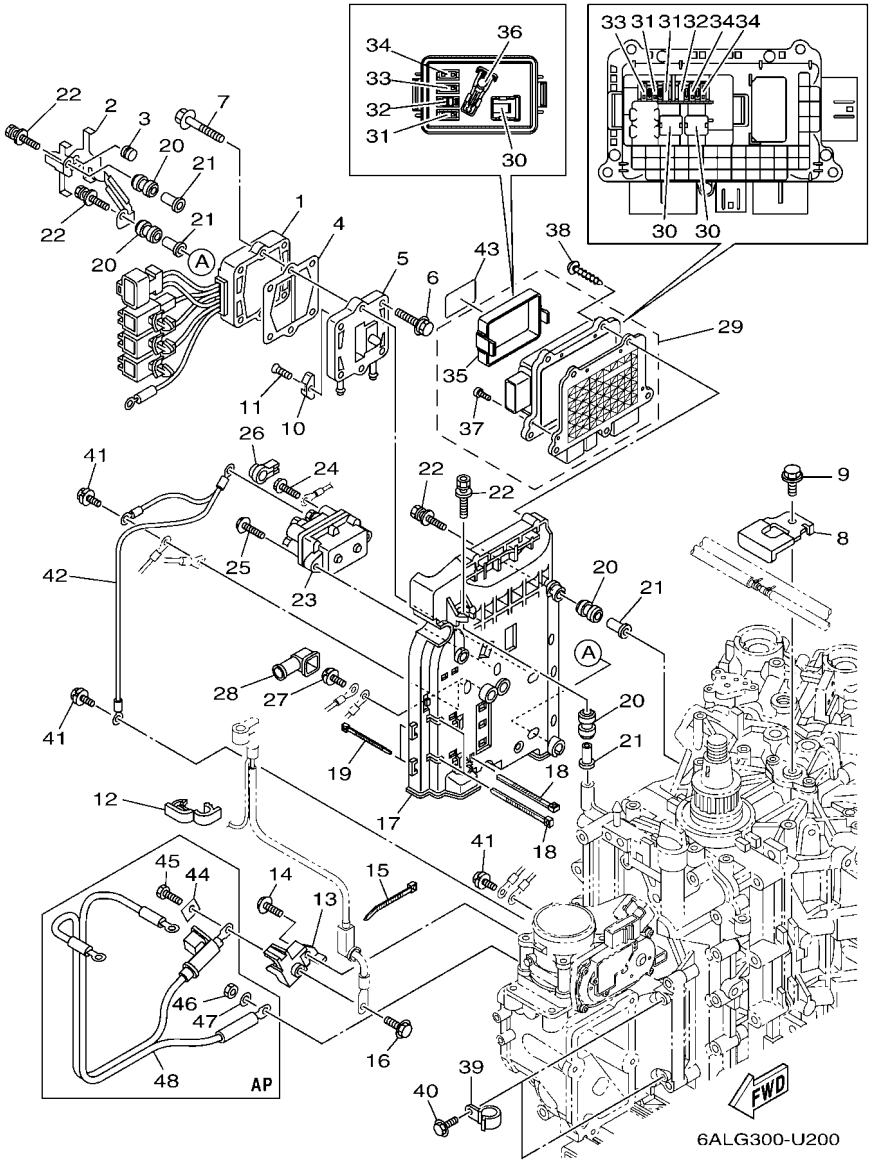

FIG. 20 ELECTRICAL 3 — PARTIE ELECTRIQUE 3

REF. NO.	PART NO. N° PIECES	DESCRIPTION DESCRIPTION	6ALL	6ASK	6AML	6ATK		REMARKS REMARQUES
1	6P2–81960–12	RECTIFIER & REGULATOR ASSY REDRESSEUR REGULATEUR CPLT	1	1	1	1		
2	6P2–81614–10	PROTECTOR PROTECTEUR	1	1	1	1		
3	2D1–14737–01	DAMPER, MUFFLER AMORTISSEUR DE POT D'ECHAPPT	1	1	1	1		
4	60V–81975–A0	PLATE, RECTIFIER FITTING PLAQUE, FIXATION DU REDRESSEUR	1	1	1	1		
5	6P2–81972–00–9S	COVER, RECTIFIER COUVERCLE, REDRESSEUR	1	1	1	1		
6	90119–06MA3	BOLT, WITH WASHER BOULON, AVEC RONDELLE	4	4	4	4		
7	90119–06MA5	BOLT, WITH WASHER BOULON, AVEC RONDELLE	2	2	2	2		
8	6P2–12491–00	CLAMP 1 COLLIER 1	1	1	1	1		
9	97E95–06512	BOLT, HEXAGON W/W DEEP RECESS VIS HEXAGONAL AVC RONDELLE	1	1	1	1		
10	6E5–11325–00	ANODE ANODE	1	1	1	1		
11	98780–04015	SCREW, FLAT HEAD VIS A TETE FRAISEE	1	1	1	1		
12	90464–18004	CLAMP BRIDE	5	5	5	5		
13	6P2–81925–01	TERMINAL BORNE	1	1	1	1		
14	97E95–08520	BOLT, HEXAGON W/W DEEP RECESS VIS HEXAGONAL AVC RONDELLE	1	1	1	1		
15	90465–11M52	CLAMP BRIDE	1	1	1	1		
16	97E95–08516	BOLT, HEXAGON W/W DEEP RECESS VIS HEXAGONAL AVC RONDELLE	1	1	1	1		
17	6P2–81948–10	BRACKET SUPPORT	1	1	1	1		
18	90465–11M52	CLAMP BRIDE	4	4	4	4		
19	90465–14M66	CLAMP BRIDE	2	2	2	2		
20	6A0–82317–01	DAMPER, IGNITION COIL AMORTISSEUR, BOBINE D'ALLUM	6	6	6	6		
21	90387–06119	COLLAR COLLERETTE	6	6	6	6		
22	90119–06294	BOLT, WITH WASHER BOULON, AVEC RONDELLE	6	6	6	6		
23	63P–81950–00	RELAY ASSY RELAIS COMPLET	1	1	1	1		
24	97E95–06610	BOLT, HEXAGON W/W DEEP RECESS VIS HEXAGONAL AVC RONDELLE	2	2	2	2		
25	97513–06525	BOLT, WITH WASHER VIS HEXAGONAL AVC RONDELLE	2	2	2	2		
26	6P2–8183X–00	CAP, TERMINAL COUVERCLE, BORNE	2	2	2	2		
27	97E95–06616	BOLT, HEXAGON W/W DEEP RECESS VIS HEXAGONAL AVC RONDELLE	1	1	1	1		

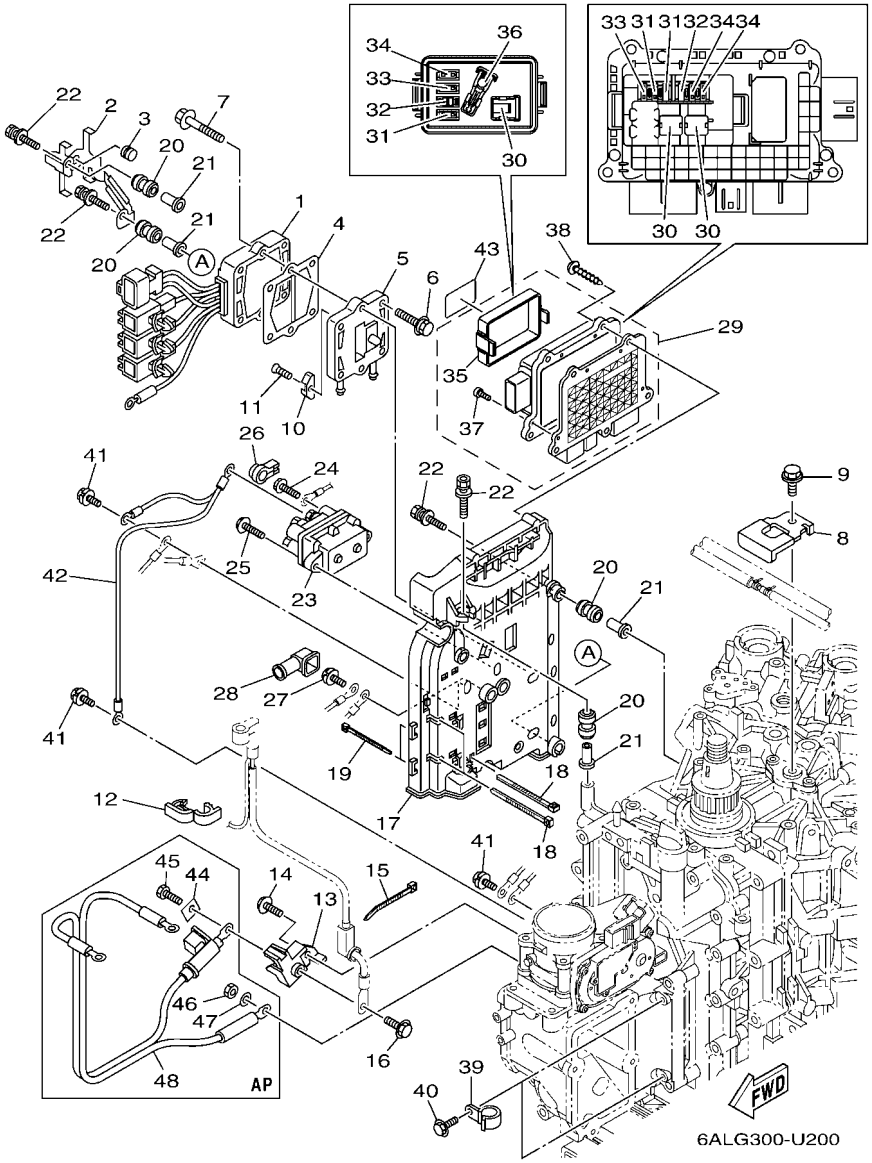

FIG. 20 ELECTRICAL 3 — PARTIE ELECTRIQUE 3

REF. NO.	PART NO. N° PIECES	DESCRIPTION DESCRIPTION	6ALL	6ASK	6AML	6ATK		REMARKS REMARQUES
28	6P2–82119–00	COVER, LEAD WIRE GARNITURE, FIL	1	1	1	1		
29	6DA–82170–12	FUSE BOX ASSY BOITE A FUSIBLES	1	1	1	1		
30	6CB–82151–41	.FUSE (60A) .FUSIBLE (60A)	3	3	3	3		
31	6CB–82151–00	.FUSE (10A) .FUSIBLE (10A)	3	3	3	3		
32	6CB–82151–10	.FUSE (15A) .FUSIBLE (15A)	2	2	2	2		
33	6CB–82151–20	.FUSE (20A) .FUSIBLE (20A)	2	2	2	2		
34	6CB–82151–30	.FUSE (30A) .FUSIBLE (30A)	3	3	3	3		
35	6CB–85544–10	.COVER .COUVERCLE	1	1	1	1		
36	6CB–2812A–00	.PULLER, FUSE .TENDEUR, FUSIBLE	1	1	1	1		
37	6P2–82113–00	.SCREW (M3) .VIS (M3)	5	5	5	5		
38	97780–50620	SCREW, TAPPING VIS, TETE BOMBEE	4	4	4	4		
39	90462–08026	CLAMP BRIDE	2	2	2	2		
40	97E95–06516	BOLT, HEXAGON W/W DEEP RECESS VIS HEXAGONAL AVC RONDELLE	2	2	2	2		
41	97E95–06616	BOLT, HEXAGON W/W DEEP RECESS VIS HEXAGONAL AVC RONDELLE	3	3	3	3		
42	6P2–8259M–10	WIRE HARNESS ASSY 2 FAISCEAU DE FILS	1	1	1	1		
43	6DA–81919–11	GRAPHIC, REGULATOR ADHESIF, REGULATEUR	1	1	1	1		
44	6P2–81923–00	WASHER RONDELLE	1	1	1	1		AP AP
45	97D95–08016	BOLT, HEXAGON DEEP RECESS VIS HEXAGONAL	1	1	1	1		AP AP
46	95333–08600	NUT ECROU	1	1	1	1		AP AP
47	92903–08100	WASHER, SPRING RONDELLE, GROWER	1	1	1	1		AP AP
48	6P2–82105–03	BATTERY CABLE CABLE DE BATTERIE	1	1	1	1		AP AP

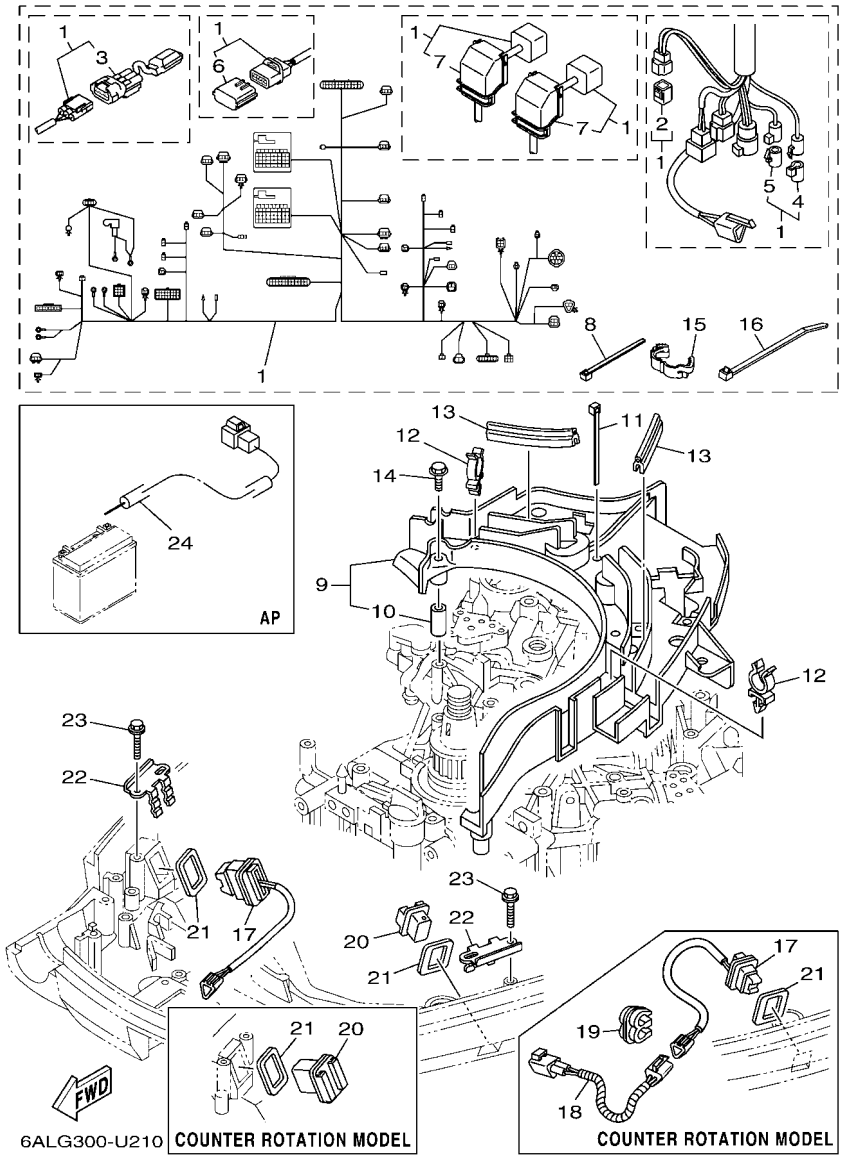

FIG. 21 ELECTRICAL 4 — PARTIE ELECTRIQUE 4

REF. NO.	PART NO. N° PIECES	DESCRIPTION DESCRIPTION	6ALL	6ASK	6AML	6ATK		REMARKS REMARQUES
1	6P2–82590–72	WIRE HARNESS ASSY FAISCEAU DE FILS COMPLET	1	1	1	1		
2	6Y8–82582–11	.CAP 1 (4PIN) .COUVERCLE 1 (4P)	1	1	1	1		
3	6FM–81980–01	.DIODE ASSY .REDRESSEUR 2	1	1	1	1		
4	6DA–82582–00	.CAP 1 (FEMALE) .BOUCHON 1 (FEMME)	1	1	1	1		
5	6DA–82582–10	.CAP 1 (MALE) .BOUCHON 1 (MALE)	1	1	1	1		
6	6AW–82582–00	.CAP 1 .BOUCHON 1	2	2	2	2		
7	6EM–82599–00	.COVER, CONNECTOR .COUVERCLE, CONNECTEUR	2	2	2	2		
8	90465–14M66	CLAMP BRIDE	4	4	4	4		
9	6P2–82589–10	PROTECTER, WIRE HARNESS PROTECTEUR, FAISCEAU DE FILS	1	1	1	1		
10	90387–06M26	.COLLAR .COLLERETTE	5	5	5	5		
11	90465–14M66	CLAMP BRIDE	2	2	2	2		
12	90464–19M45	CLAMP BRIDE	4	4	4	4		
13	6P2–85722–00	INSULATOR ISOLATEUR	2	2	2	2		
14	97E95–06535	BOLT, HEXAGON W/W DEEP RECESS VIS HEXAGONAL AVC RONDELLE	5	5	5	5		
15	90464–14010	CLAMP BRIDE	1	1	1	1		
16	90465–13M18	CLAMP BRIDE	3	3	3	3		
17	69J–82563–01	TRIM & TILT SWITCH ASSY INCLINER ET PARER COMMUTATEUR	1	1	1	1		
18	6P3–82553–00	EXTENSION, WIRE LEAD EXTENSION, FAISCEAU			1	1		
19	90464–10M57	CLAMP BRIDE			1	1		
20	69J–42723–01	COVER, BOTTOM COUVERCLE	1	1	1	1		
21	69J–82587–01	GASKET JOINT	2	2	2	2		
22	69J–83614–10	BRACKET SUPPORT	2	2	2	2		
23	90109–06M86	BOLT BOULON	4	4	4	4		
24	69J–81949–03	WIRE, LEAD (ISOLATOR, 3.8M) FIL (ISOLATOR, 3.8M)	1	1	1	1		AP AP

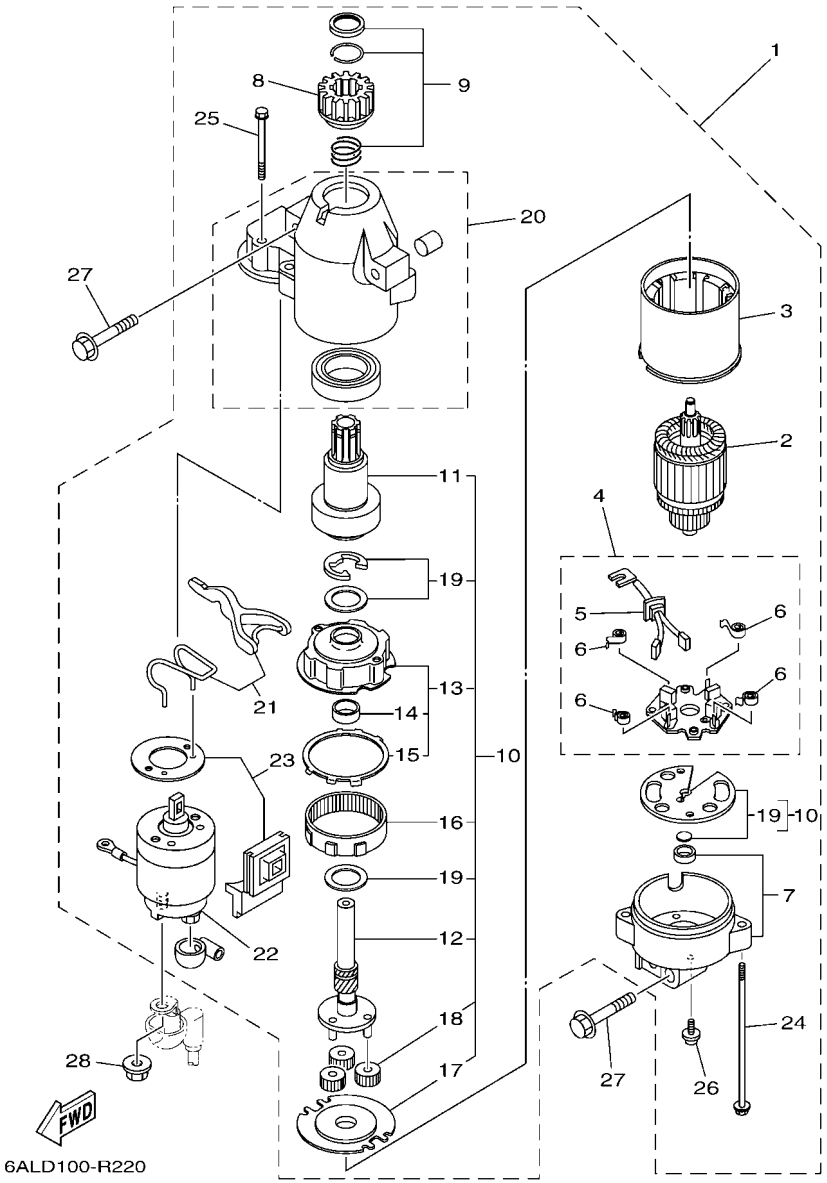

FIG. 22 STARTING MOTOR — DEMARREUR ELECTRIQUE

REF. NO.	PART NO. N° PIECES	DESCRIPTION DESCRIPTION	6ALL	6ASK	6AML	6ATK		REMARKS REMARQUES
1	6BR–81800–02	STARTING MOTOR ASSY DEMARREUR ELECTRIQUE COMPLET	1	1	1	1		
2	67F–81850–00	.ARMATURE ASSY .INDUIT	1	1	1	1		
3	67F–81810–00	.STATOR ASSY .STATOR COMPLET	1	1	1	1		
4	69J–81840–11	.BRUSH HOLDER ASSY .SUPPORT DE CHARBON	1	1	1	1		
5	69J–81801–11	..BRUSH SET ..JEU DE BROSSE	1	1	1	1		
6	67F–81813–00	..SPRING, BRUSH ..RESSORT, DE CHARBON	4	4	4	4		
7	67F–81820–00	.REAR BRACKET ASSY .SUPPORT ARRIERE COMPLET	1	1	1	1		
8	67F–81808–00	.PINION ASSY .PIGNON	1	1	1	1		
9	67F–81857–00	.PINION STOPPER SET .BUTEE PIGNON	1	1	1	1		
10	67F–81807–00	.GEAR ASSY, STARTING MOTOR .PIGNON, DEMARREUR ELECTRIQUE	1	1	1	1		
11	67F–81832–00	..CLUTCH, OVER RUN ..EMBRAYAGE, ROUE LIBRE	1	1	1	1		
12	67F–81836–00	..SHAFT, PINION ..AXE, PIGNON	1	1	1	1		
13	67F–81821–00	..BRACKET, CENTER 1 ..SUPPORT, CENTRE 1	1	1	1	1		
14	67F–81841–00	...BEARING ...ROULEMENT	1	1	1	1		
15	67F–8183R–00	...GASKET ...JOINT	1	1	1	1		
16	67F–81891–00	..GEAR, RING ..ROUE DENTEE	1	1	1	1		WITH 67F-8183R-00 WITH 67F-8183R-00
17	67F–81830–00	..BRACKET, CENTER 2 ..SUPPORT, CENTRE 2	1	1	1	1		
18	60V–8183T–00	..GEAR, IDLER ..PIGNON, INTERMEDIAIRE	3	3	3	3		
19	67F–81809–00	..WASHER KIT ..JEU DE RONDELLES	1	1	1	1		
20	69J–81842–00	.COVER .COUVERCLE	1	1	1	1		
21	6C5–81839–00	.LEVER ASSY .LEVIER COMPLET	1	1	1	1		
22	63P–81941–00	.STARTER RELAY ASSY .LANCEUR RELAIS (ENS.)	1	1	1	1		
23	6C5–81869–00	.COVER, DUST .COUVERCLE, POUSSIERE	1	1	1	1		
24	6K7–81826–11	.BOLT .BOULON	2	2	2	2		
25	69J–81828–00	.BOLT 2 .BOULON 2	2	2	2	2		
26	67F–81846–00	.SCREW .VIS	2	2	2	2		
27	97513–08545	BOLT, WITH WASHER VIS HEXAGONAL AVC RONDELLE	3	3	3	3		

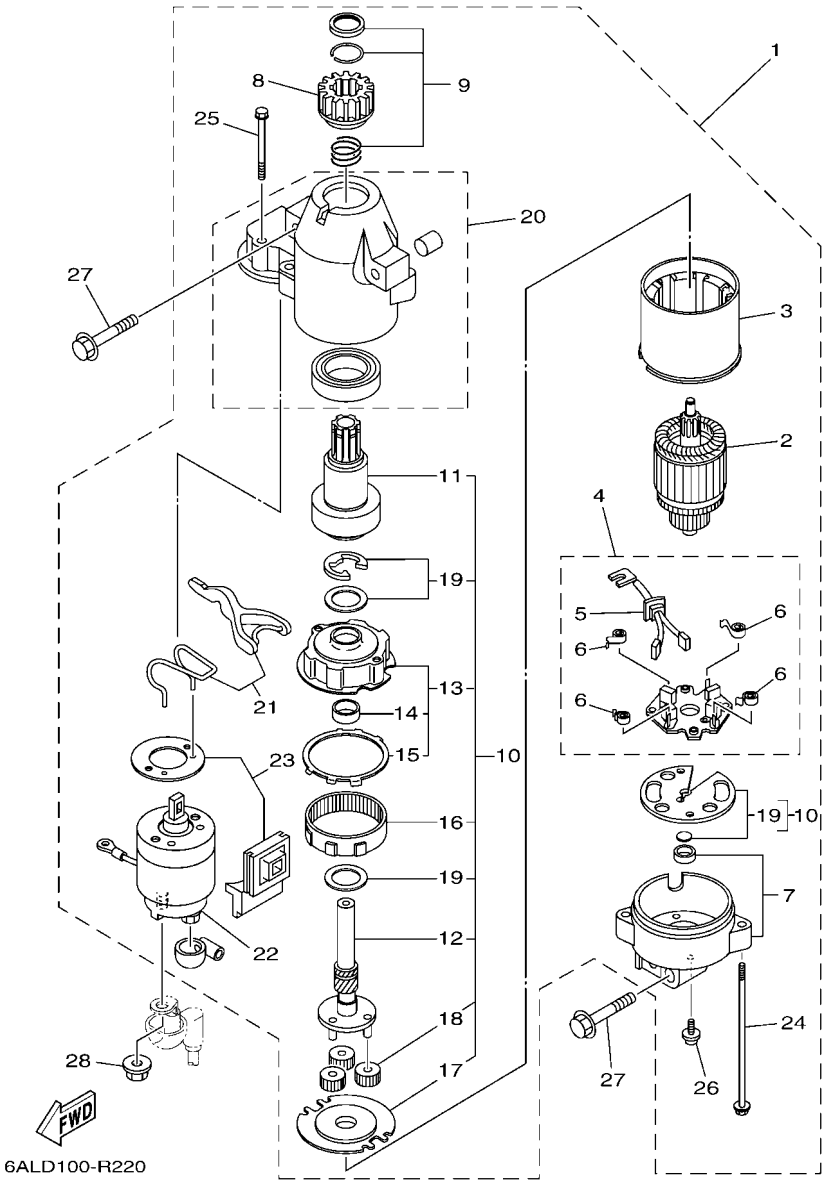

FIG. 22 STARTING MOTOR — DEMARREUR ELECTRIQUE

REF. NO.	PART NO. N° PIECES	DESCRIPTION DESCRIPTION	6ALL	6ASK	6AML	6ATK		REMARKS REMARQUES
28	90179–08003	NUT ECROU	1	1	1	1		

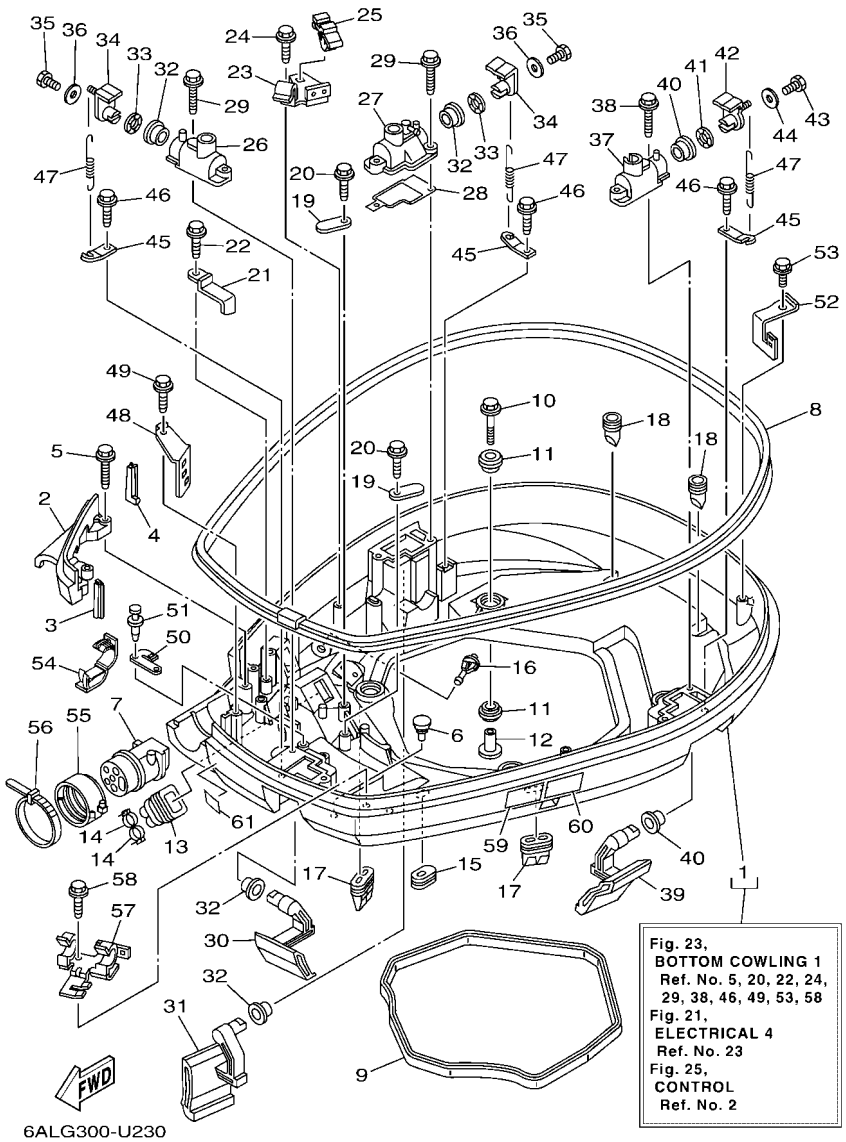

FIG. 23 BOTTOM COWLING 1 — CAPOT INFERIEUR 1

REF. NO.	PART NO. N° PIECES	DESCRIPTION DESCRIPTION	6ALL	6ASK	6AML	6ATK		REMARKS REMARQUES
1	6P2–42710–00–8D	BOTTOM COWLING ASSY ENS. EMBASE	1	1	1	1		
2	6P2–42738–00–8D	PLATE, FITTING ETRIER	1	1	1	1		
3	6P2–42717–00	RUBBER, SEAL 2 JOINT EN CAOUTCHOUC 2	1	1	1	1		
4	6P2–42718–00	RUBBER, SEAL 3 JOINT	1	1	1	1		
5	90109–06M82	BOLT BOULON	2	2	2	2		
6	6H4–42748–01	GROMMET PASSE-FIL	2	2	2	2		
7	6P2–42725–02	GROMMET PASSE-FIL	1	1	1	1		
8	6P2–42615–00	SEAL JOINT	1	1	1	1		
9	69J–42716–01	RUBBER SEAL 1 JOINT EN CAOUTCHOUC 1	1	1	1	1		
10	90119–08187	BOLT, WITH WASHER BOULON, AVEC RONDELLE	4	4	4	4		
11	90480–22M81	GROMMET PASSE-FIL	8	8	8	8		
12	90387–08M37	COLLAR COLLERETTE	4	4	4	4		
13	6H1–42726–22	GROMMET PASSE-FIL	1	1	1	1		
14	90465–11M10	CLAMP BRIDE	2	2	2	2		
15	61A–42727–01	GROMMET PASSE-FIL	1	1	1	1		
16	6P2–44391–00	NIPPLE, HOSE RACCORD D'ESSENCE	1	1	1	1		
17	69J–42717–01	RUBBER, SEAL 2 JOINT EN CAOUTCHOUC 2	2	2	2	2		
18	61A–42717–00	RUBBER, SEAL 2 JOINT EN CAOUTCHOUC 2	2	2	2	2		
19	6E5–82588–00	PLATE PLAQUE	2	2	2	2		
20	90109–06M81	BOLT BOULON	2	2	2	2		
21	90462–20001	CLAMP BRIDE	1	1				
22	90109–06M86	BOLT BOULON	1	1				
23	6P2–82554–00	STAY, NEUTRAL SWITCH SUPPORT, CONT DE POINT-MORT	1	1	1	1		
24	90109–06M86	BOLT BOULON	1	1	1	1		
25	90464–09M47	CLAMP BRIDE	1	1	1	1		
26	69J–42828–02–9S	PLATE, CLAMP PLAQUE, PRESSE	1	1	1	1		
27	6P2–42828–00–9S	PLATE, CLAMP PLAQUE, PRESSE	1	1	1	1		

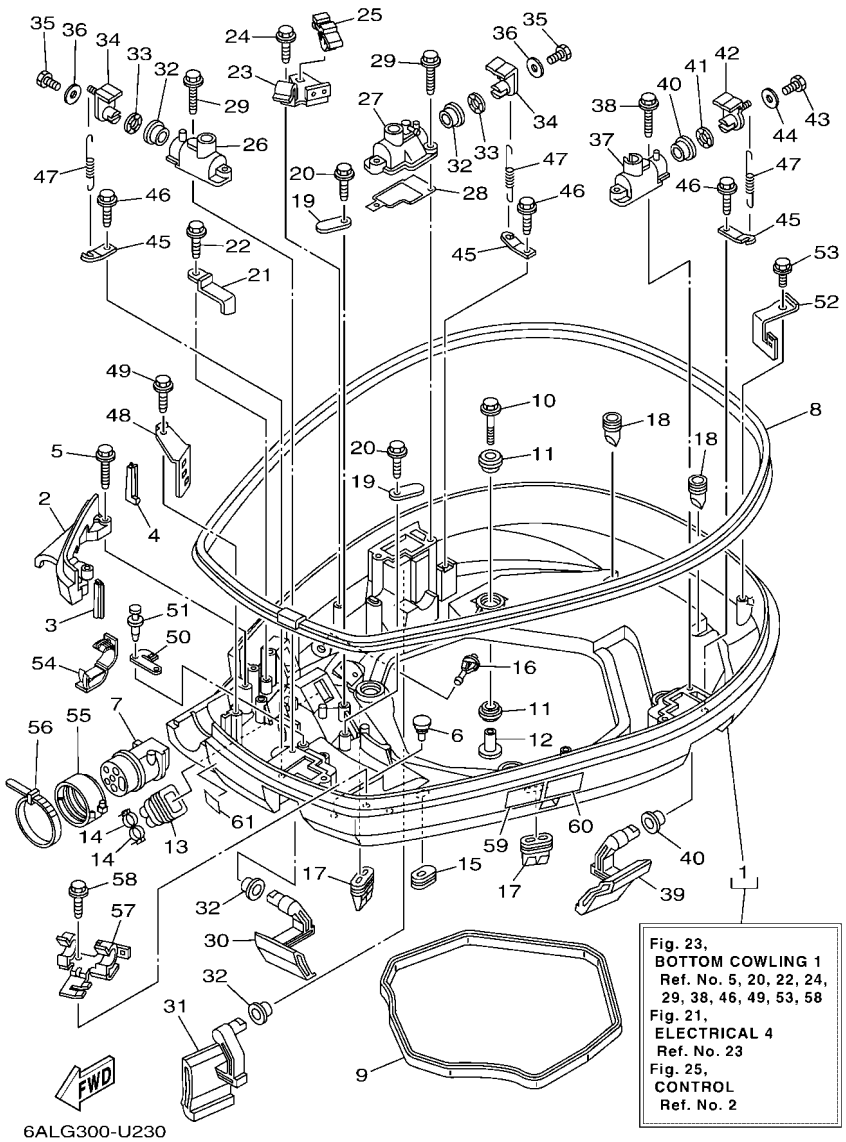

FIG. 23 BOTTOM COWLING 1 — CAPOT INFERIEUR 1

REF. NO.	PART NO. N° PIECES	DESCRIPTION DESCRIPTION	6ALL	6ASK	6AML	6ATK		REMARKS REMARQUES
28	6P2–42722–00	GASKET 2 JOINT 2	1	1	1	1		
29	90109–06M82	BOLT BOULON	4	4	4	4		
30	69J–42815–00–8D	LEVER, CLAMP 1 LEVIER, PRESSE 1	1	1	1	1		
31	69J–42817–00–8D	LEVER, CLAMP 3 LEVIER, PRESSE 3	1	1	1	1		
32	90386–15M73	BUSH DOUILLE	4	4	4	4		
33	90206–15M18	WASHER, WAVE RONDELLE, ONDULEE	2	2	2	2		
34	63P–42818–01	LEVER, CLAMP 4 LEVIER, PRESSE 4	2	2	2	2		
35	97D95–06020	BOLT, HEXAGON DEEP RECESS VIS HEXAGONAL	2	2	2	2		
36	90201–06068	WASHER, PLATE RONDELLE, PLATE	2	2	2	2		
37	68F–42828–11–9S	PLATE, CLAMP PLAQUE, PRESSE	1	1	1	1		
38	90109–06M82	BOLT BOULON	2	2	2	2		
39	69J–42816–00–8D	LEVER, CLAMP 2 LEVIER, PRESSE 2	1	1	1	1		
40	90386–15M73	BUSH DOUILLE	2	2	2	2		
41	90206–15M18	WASHER, WAVE RONDELLE, ONDULEE	1	1	1	1		
42	68V–42818–01	LEVER, CLAMP 4 LEVIER, PRESSE 4	1	1	1	1		
43	97D95–06020	BOLT, HEXAGON DEEP RECESS VIS HEXAGONAL	1	1	1	1		
44	90201–06068	WASHER, PLATE RONDELLE, PLATE	1	1	1	1		
45	64D–43144–00	HOOK, SPRING CROCHET	3	3	3	3		
46	90109–06M86	BOLT BOULON	3	3	3	3		
47	90506–18M40	SPRING, TENSION RESSORT, TENSION	3	3	3	3		
48	6P2–42743–00	BRACKET SUPPORT	1	1	1	1		
49	90109–06M82	BOLT BOULON	1	1	1	1		
50	6P2–42766–20	BRACKET 2 SUPPORT 2	1	1	1	1		
51	90269–05005	RIVET RIVET	2	2	2	2		
52	69J–8366G–02	BRACKET 3 SUPPORT 3	1	1	1	1		
53	90109–06M86	BOLT BOULON	1	1	1	1		
54	90464–18004	CLAMP BRIDE	2	2	2	2		

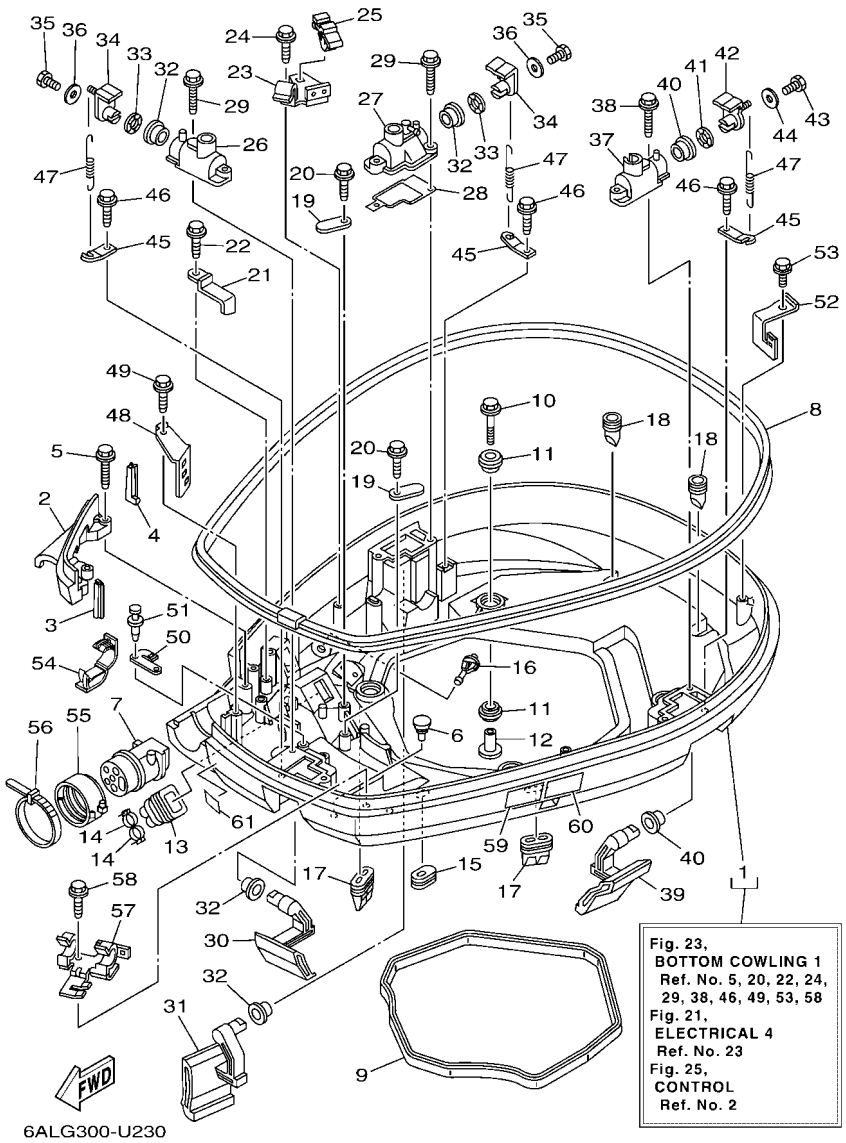

FIG. 23 BOTTOM COWLING 1 — CAPOT INFERIEUR 1

REF. NO.	PART NO. N° PIECES	DESCRIPTION DESCRIPTION	6ALL	6ASK	6AML	6ATK		REMARKS REMARQUES
55	68F–42753–00	FASTNER ATTACHE	1	1	1	1		AP AP
56	90464–20258	CLAMP BRIDE	1	1	1	1		AP AP
57	6P2–82594–00	CLAMP BRIDE	1	1	1	1		
58	90109–06M86	BOLT BOULON	1	1	1	1		
59	6EE–42794–40	LABEL, WARNING (GENERAL) ETIQUETTE, AVERTISSEMENT	1	1	1	1		
60	6EE–42794–50	LABEL, WARNING (GENERAL) ETIQUETTE, AVERTISSEMENT	1	1	1	1		
61	6AH–81996–00	MARK MARQUE	1	1	1	1		

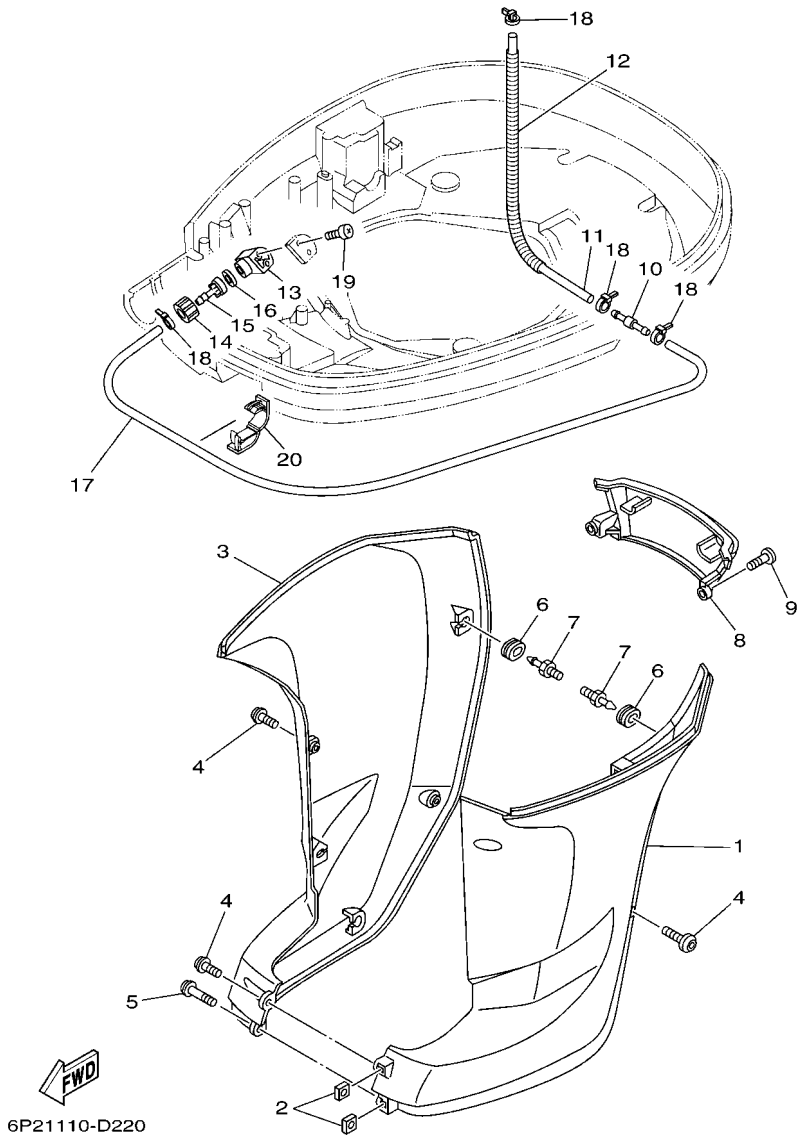

FIG. 24 BOTTOM COWLING 2 — CAPOT INFERIEUR 2

REF. NO.	PART NO. N° PIECES	DESCRIPTION DESCRIPTION	6ALL	6ASK	6AML	6ATK		REMARKS REMARQUES
1	69J–42741–00–8D	APRON CAPOT LATERAL	1	1	1	1		
2	90173–06001	NUT, SQUARE ECROU, CARRE	2	2	2	2		
3	69J–42771–00–8D	APRON CAPOT LATERAL	1	1	1	1		
4	90111–06144	BOLT, HEXAGON SOCKET BUTTON BOULON	5	5	5	5		
5	90111–06142	BOLT, HEXAGON SOCKET BUTTON BOULON	1	1	1	1		
6	90480–14M17	GROMMET PASSE-FIL	6	6	6	6		
7	69J–42774–10	STAY, APRON 1 COUSSINET	6	6	6	6		
8	69J–45151–00–8D	COVER, UPPER CASING CAPUCHON, FOURREAU	1	1	1	1		
9	90111–06144	BOLT, HEXAGON SOCKET BUTTON BOULON	2	2	2	2		
10	6E5–24379–00	PIPE, JOINT 4 DURITE RACCORDEMENT 4	1	1	1	1		
11	90445–11M47	HOSE (L370) DURITE (L370)	1	1	1	1		
12	90447–13009	TUBE DURITE	1	1	1	1		
13	6DR–12572–00	ADAPTER ADAPTATEUR	1	1	1	1		
14	6R3–12581–00	JOINT, HOSE 1 JOINT DE TUYAU	1	1	1	1		
15	6R3–12582–00	JOINT, HOSE 2 RACCORD DE TUYAU 1	1	1	1	1		
16	6R3–12583–00	GASKET, HOSE JOINT JOINT	1	1	1	1		
17	90445–11028	HOSE (L1050) DURITE (L1050)	1	1	1	1		
18	90465–11M10	CLAMP BRIDE	4	4	4	4		
19	97780–60520	SCREW, TAPPING VIS, TETE BOMBEE	2	2	2	2		
20	90464–18004	CLAMP BRIDE	1	1	1	1		

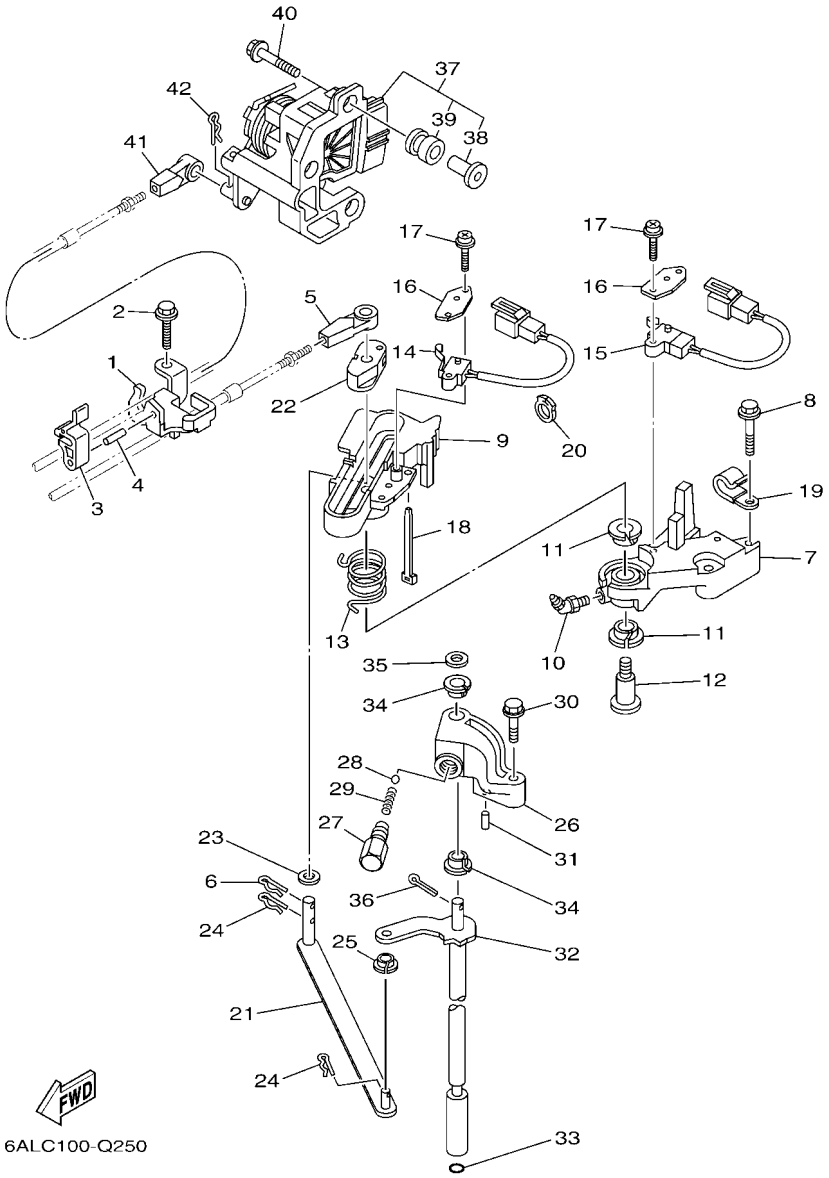

FIG. 25 CONTROL — COMMANDE

REF. NO.	PART NO. N° PIECES	DESCRIPTION DESCRIPTION	6ALL	6ASK	6AML	6ATK		REMARKS REMARQUES
1	6P2–48531–00	BRACKET, REMOTE CONTROL 1 ETRIER 1, COMMANDE A DISTANCE	1	1	1	1		
2	90109–06M86	BOLT BOULON	2	2	2	2		
3	63P–48538–00	CLAMP, CABLE 1 COLLIER	1	1	1	1		
4	91690–30010	PIN, SPRING AGRAFFE	1	1	1	1		
5	6E5–48344–00	CABLE END, REMOTE CONTROL CHAPE CABLE	1	1	1	1		
6	90468–18008	CLIP JONC	1	1	1	1		
7	69J–44117–00	BRACKET SUPPORT	1	1	1	1		
8	97E95–06535	BOLT, HEXAGON W/W DEEP RECESS VIS HEXAGONAL AVC RONDELLE	2	2	2	2		
9	69J–44176–01	BRACKET SUPPORT	1	1	1	1		
10	93700–06M01	NIPPLE, GREASE PION	1	1	1	1		
11	90386–12069	BUSH DOUILLE	2	2	2	2		
12	90109–08019	BOLT BOULON	1	1	1	1		
13	90508–20020	SPRING, TORSION RESSORT, TORSION	1	1	1	1		
14	60V–8259F–01	SWITCH ASSY COMMUTATEUR	1	1	1	1		
15	69J–8259F–00	SWITCH ASSY COMMUTATEUR	1	1	1	1		
16	61A–82588–01	PLATE PLAQUE	2	2	2	2		
17	97985–04116	SCREW, WITH WASHER VIS, AVEC RONDELLE	4	4	4	4		
18	90465–11M10	CLAMP BRIDE	1	1	1	1		
19	90465–06M86	CLAMP BRIDE	1	1	1	1		
20	90464–09010	CLAMP BRIDE	1	1	1	1		
21	6P2–44121–00	LEVER, SHIFT ROD LEVIER, TIGE D'INVERSION	1	1	1	1		
22	69J–44122–00	BUSHING, SHIFT ROD LEVER DOUILLE, LEVIER D'EMBRAYAGE	1	1	1	1		
23	90202–08M20	WASHER, PLATE RONDELLE, PLATE	1	1	1	1		
24	90468–18008	CLIP JONC	2	2	2	2		
25	90386–06M12	BUSH DOUILLE	1	1	1	1		
26	69J–44118–00	BRACKET SUPPORT	1	1	1	1		
27	648–42715–00	BUSHING 2 COUSSINET 2	1	1	1	1		

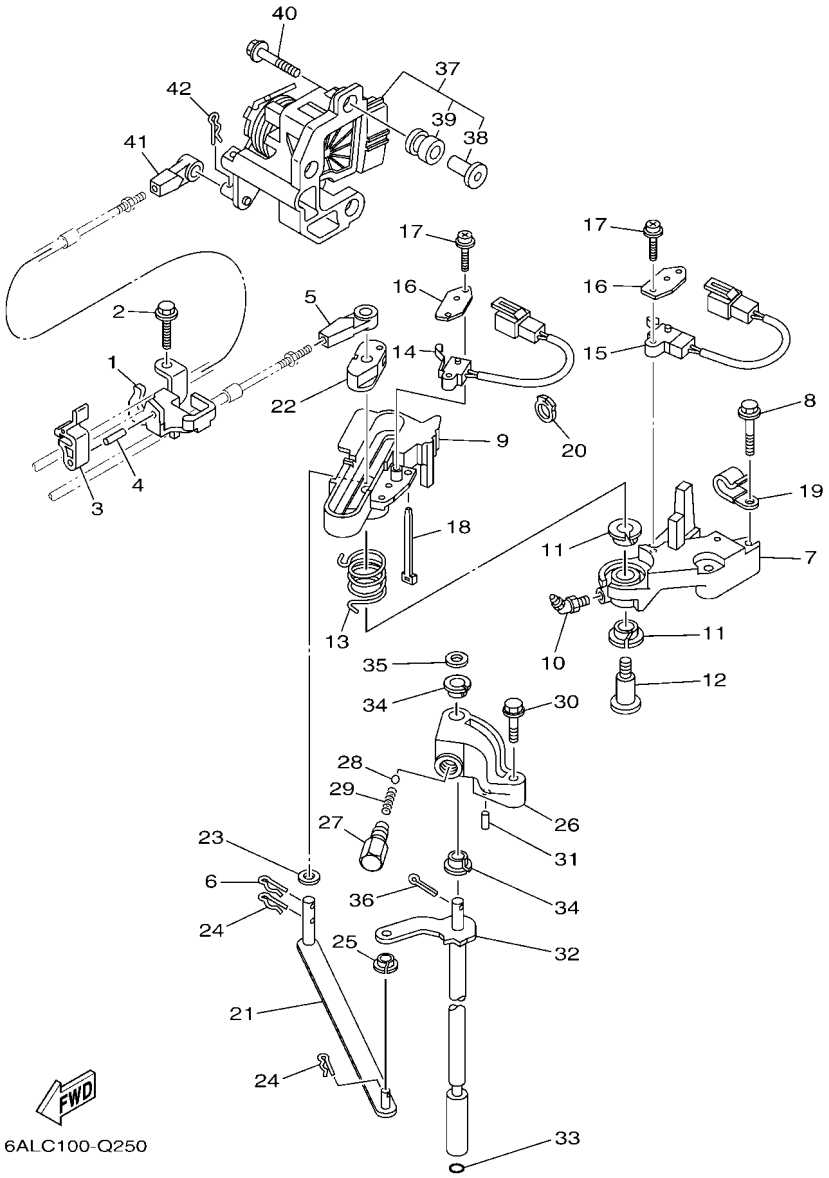

FIG. 25 CONTROL — COMMANDE

REF. NO.	PART NO. N° PIECES	DESCRIPTION DESCRIPTION	6ALL	6ASK	6AML	6ATK		REMARKS REMARQUES
28	93501–04M02	BALL BILLE	1	1	1	1		
29	90501–12082	SPRING, COMPRESSION RESSORT, COMPRESSION	1	1	1	1		
30	97E75–06535	BOLT, HEXAGON W/W DEEP RECESS VIS HEXAGONAL AVC RONDELLE	1	1	1	1		
31	91690–30010	PIN, SPRING AGRAFFE	1	1	1	1		
32	69J–44120–02	HANDLE GEAR SHIFT ASSY LEVIER D'EMBRAYAGE	1	1	1	1		X(25.3") X(25.3")
	69J–44120–12	HANDLE GEAR SHIFT ASSY LEVIER D'EMBRAYAGE		1				U(30.3") U(30.3")
33	93210–09165	O-RING JOINT TORIQUE	1	1	1	1		
34	90386–90M90	BUSH DOUILLE	2	2	2	2		
35	90201–09M02	WASHER, PLATE RONDELLE, PLATE	1	1	1	1		
36	91490–20015	PIN. COTTER GOUPILLE	1	1	1	1		
37	6P2–8A410–02	SENSOR UNIT UNITE DE CAPTEUR	1	1	1	1		
38	6P2–44139–00	.COLLAR .COLLIER	3	3	3	3		
39	6CB–41273–00	.GROMMET .PASSE-FIL	3	3	3	3		
40	90119–06297	BOLT, WITH WASHER BOULON, AVEC RONDELLE	3	3	3	3		
41	6E5–48344–00	CABLE END, REMOTE CONTROL CHAPE CABLE	1	1	1	1		
42	90468–18008	CLIP JONC	1	1	1	1		

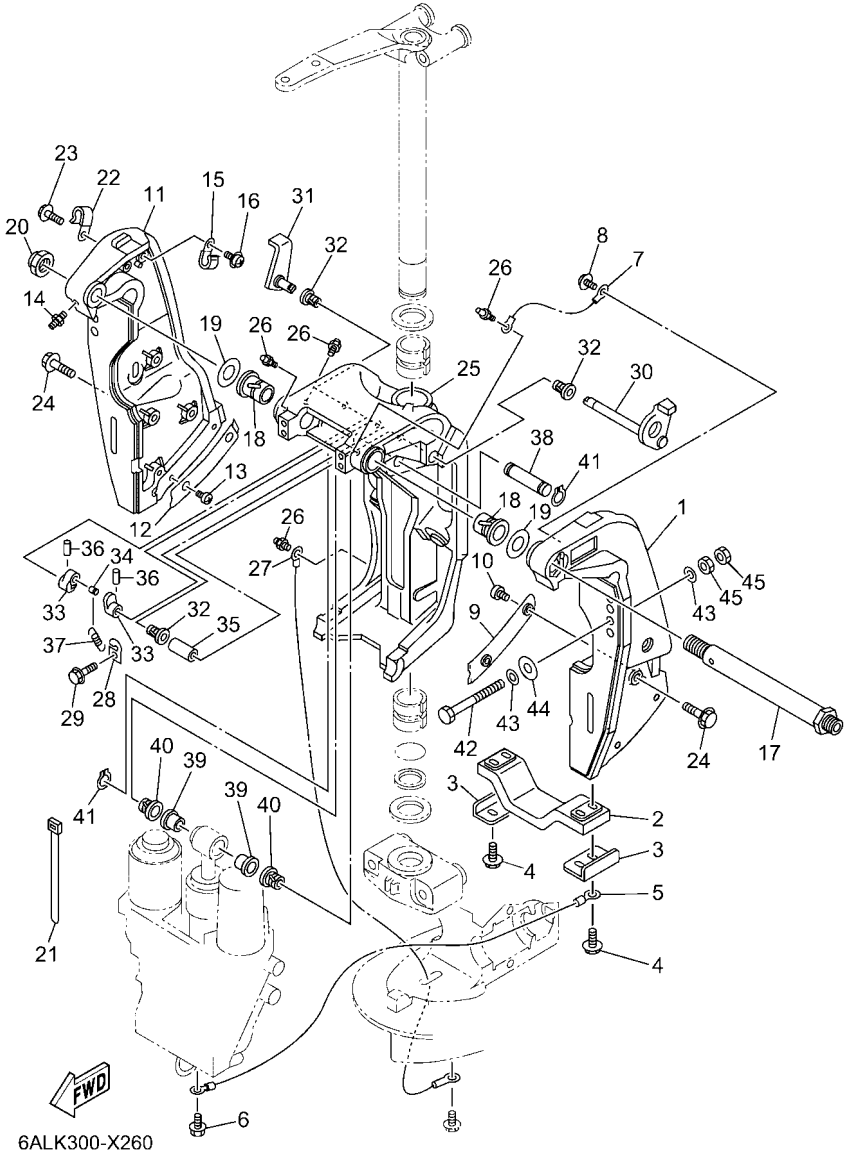

FIG. 26 BRACKET 1 — SUPPORT 1

REF. NO.	PART NO. N° PIECES	DESCRIPTION DESCRIPTION	6ALL	6ASK	6AML	6ATK		REMARKS REMARQUES
1	69J–43111–03–8D	BRACKET, CLAMP 1 PRESSE 1	1	1	1	1		
2	6G5–45251–02	ANODE ANODE	1	1	1	1		
3	6G5–44526–00	PLATE PLAQUE	2	2	2	2		
4	97E95–06525	BOLT, HEXAGON W/W DEEP RECESS VIS HEXAGONAL AVC RONDELLE	4	4	4	4		
5	6H1–82148–00	WIRE, LEAD 4 FIL 4	1	1	1	1		
6	97E95–06510	BOLT, HEXAGON W/W DEEP RECESS VIS HEXAGONAL AVC RONDELLE	1	1	1	1		
7	6E5–82148–00	WIRE, LEAD 4 FIL 4	1	1	1	1		
8	97985–06212	SCREW, WITH WASHER VIS, AVEC RONDELLE	1	1	1	1		
9	61A–43132–01	WASHER, FRICTION RONDELLE, FRICTION	1	1	1	1		
10	97885–06010	SCREW, PAN HEAD VIS, A ENCOCHE	2	2	2	2		
11	69J–43112–03–8D	BRACKET, CLAMP 2 PRESSE 2	1	1	1	1		
12	61A–43133–01	WASHER,FRICTION RONDELLE	1	1	1	1		
13	97885–06010	SCREW, PAN HEAD VIS, A ENCOCHE	2	2	2	2		
14	93700–06002	NIPPLE, GREASE PION	1	1	1	1		
15	90465–08M83	CLAMP BRIDE	1	1	1	1		
16	97985–06212	SCREW, WITH WASHER VIS, AVEC RONDELLE	1	1	1	1		
17	6R3–43131–00	BOLT, CLAMP BRACKET BOULON, PRESSE	1	1	1	1		
18	90386–25M31	BUSH DOUILLE	2	2	2	2		
19	90201–26M59	WASHER, PLATE RONDELLE, PLATE	2	2	2	2		
20	90185–22M11	NUT, SELF-LOCKING ECROU,AUTO-BLOQUANT	1	1	1	1		
21	90465–11M10	CLAMP BRIDE	4	4	4	4		
22	90465–08M83	CLAMP BRIDE	1	1	1	1		
23	97585–06510	BOLT, WITH WASHER VIS HEXAGONAL AVC RONDELLE	1	1	1	1		
24	90119–10024	BOLT, WITH WASHER BOULON, AVEC RONDELLE	8	8	8	8		
25	61A–43311–22–8D	BRACKET, SWIVEL 1 SUPPORT, PIVOT 1	1	1	1	1		
26	93700–06002	NIPPLE, GREASE PION	5	5	5	5		
27	69J–82147–00	WIRE, LEAD 5 FIL 5	1	1	1	1		

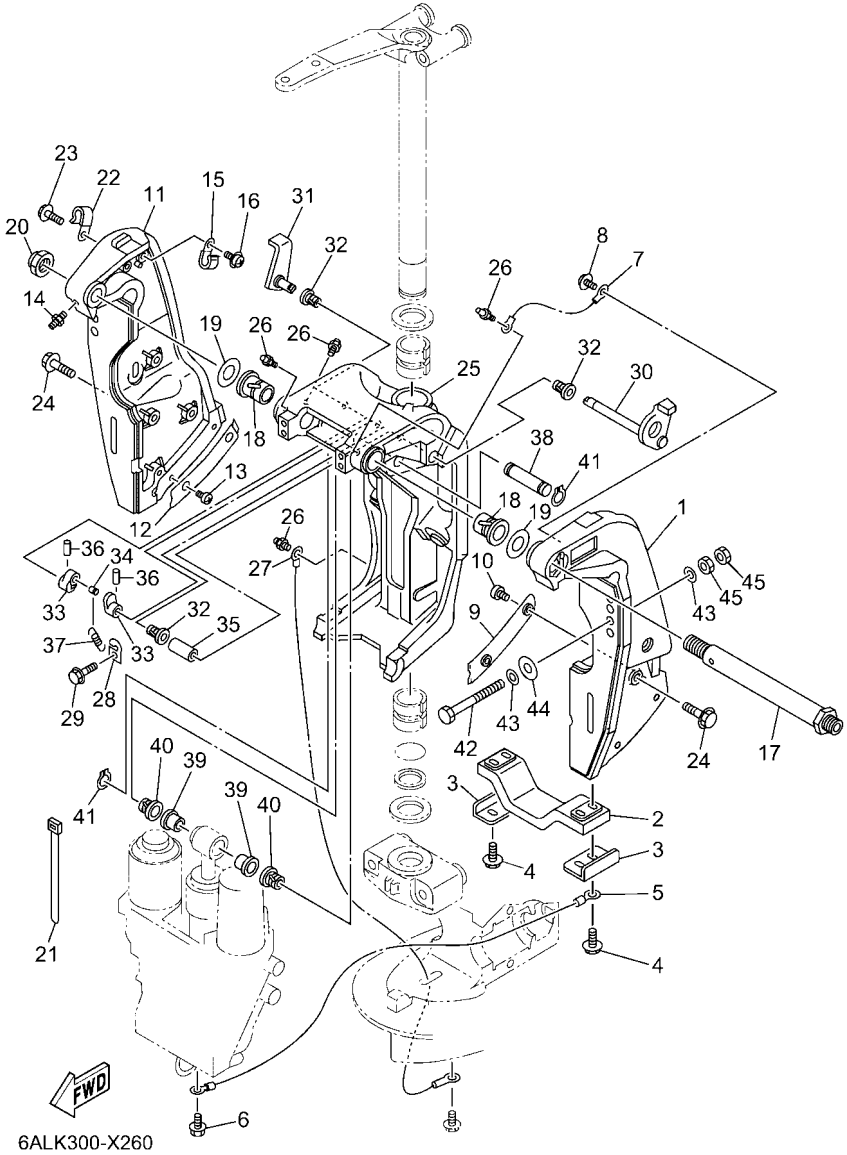

6ALK300-X260

FIG. 26 BRACKET 1 — SUPPORT 1

REF. NO.	PART NO. N° PIECES	DESCRIPTION DESCRIPTION	6ALL	6ASK	6AML	6ATK		REMARKS REMARQUES
28	6G5–43144–00	HOOK, SPRING CROCHET	1	1	1	1		
29	97E95–06512	BOLT, HEXAGON W/W DEEP RECESS VIS HEXAGONAL AVC RONDELLE	1	1	1	1		
30	61A–43181–01	LEVER, TILT STOP 1 LEVIER VERROUILLAGE RELEVAGE 1	1	1	1	1		
31	6G5–43185–02	LEVER, TILT STOP 2 LEVIER VERROUILLAGE RELEVAGE 2	1	1	1	1		
32	90386–10M16	BUSH DOUILLE	3	3	3	3		
33	6G5–43148–00	COLLAR, DISTANCE ENTRETOISE	2	2	2	2		
34	90249–06M19	PIN GOUPILLE	1	1	1	1		
35	90387–10M05	COLLAR COLLERETTE	1	1	1	1		
36	91690–30020	PIN, SPRING AGRAFFE	2	2	2	2		
37	90506–16003	SPRING, TENSION RESSORT, TENSION	1	1	1	1		
38	6E5–43126–10	PIN, UPPER SHOCK MOUNT AXE, SUPERIEUR AMORTISSEUR	1	1	1	1		
39	90386–18M63	BUSH DOUILLE	2	2	2	2		
40	90386–18M14	BUSH DOUILLE	2	2	2	2		
41	93410–18M05	CIRCLIP CIRCLIP	2	2	2	2		
42	90101–12065	BOLT (L:130MM) BOULON (L:130MM)	2	2		2		UR EXCEPT FOR RUS UR EXCEPT FOR RUS
	90101–12065	BOLT (L:130MM) BOULON (L:130MM)	4		4			UR FOR RUS UR FOR RUS
	90101–12066	BOLT (L:150MM) BOULON (L:150MM)	2	2		2		UR EXCEPT FOR RUS UR EXCEPT FOR RUS
43	90201–13M01	WASHER, PLATE RONDELLE, PLATE	8	8	8	8		
44	90201–12426	WASHER, PLATE RONDELLE, PLATE	4	4	4	4		
45	95380–12600	NUT ECROU	8	8	8	8		

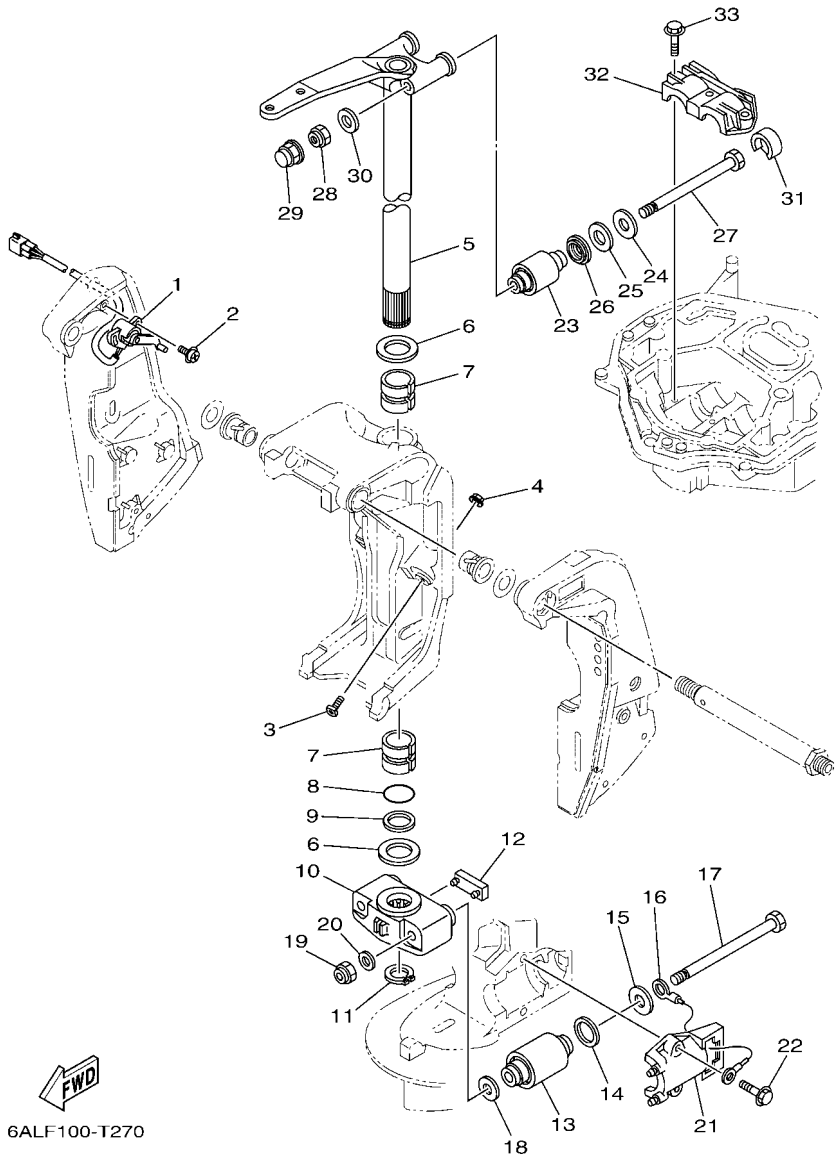

FIG. 27 BRACKET 2 — SUPPORT 2

REF. NO.	PART NO. N° PIECES	DESCRIPTION DESCRIPTION	6ALL	6ASK	6AML	6ATK		REMARKS REMARQUES
1	69J–83672–12	TRIM SENDER INCLINER RACCORD	1	1	1	1		
2	97985–06216	SCREW, WITH WASHER VIS, AVEC RONDELLE	2	2	2	2		
3	6AW–43376–00	BOLT, THRUST RECEIVER BOULON	2	2	2	2		
4	95780–10300	NUT, FLANGE ECROU	2	2	2	2		
5	69J–42510–00–8D	STEERING BRACKET ASSY DIRECTION SUPPORT (ENS.)	1	1	1	1		
6	90201–40M00	WASHER, PLATE RONDELLE, PLATE	2	2	2	2		
7	90386–39M89	BUSH DOUILLE	2	2	2	2		
8	93210–35321	O-RING JOINT TORIQUE	1	1	1	1		
9	90202–40M47	WASHER, PLATE RONDELLE, PLATE	1	1	1	1		
10	69J–44551–00–8D	HOUSING, LOWER MOUNT RUBBER 1 BOITIER, SILENT-BLOC INFERIEUR	1	1	1	1		
11	93410–37M04	CIRCLIP CIRCLIP	1	1	1	1		
12	61A–44575–01	DAMPER, LOWER MOUNT RUBBER SILENT-BLOC, INFERIEUR	1	1	1	1		
13	60X–44555–00	MOUNT DAMPER, LOWER SIDE SILENT-BLOC, INFERIEUR LATERAL	2	2	2	2		
14	90202–32M19	WASHER, PLATE RONDELLE, PLATE	2	2	2	2		
15	90201–16016	WASHER, PLATE RONDELLE, PLATE	2	2	2	2		
16	6E5–82149–00	WIRE, LEAD 3 FIL 3	1	1	1	1		
17	90101–14002	BOLT BOULON	2	2	2	2		
18	90201–15M58	WASHER, PLATE RONDELLE, PLATE	2	2	2	2		
19	90185–14M00	NUT, SELF-LOCKING ECROU,AUTO-BLOQUANT	2	2	2	2		
20	92995–14600	WASHER RONDELLE	2	2	2	2		
21	61A–44552–01–CA	HOUSING, LOWER MOUNT RUBBER 2 BOITIER, SILENT-BLOC INFERIEUR	2	2	2	2		
22	90119–10024	BOLT, WITH WASHER BOULON, AVEC RONDELLE	4	4	4	4		
23	69J–44514–00	MOUNT DAMPER, UPPER SIDE SILENT-BLOC, SUPERIEUR LATERAL	2	2	2	2		
24	90201–16015	WASHER, PLATE RONDELLE, PLATE	2	2	2	2		
25	90202–28M46	WASHER, PLATE RONDELLE, PLATE	2	2	2	2		
26	69J–44532–00	STOPPER, UPPER MOUNT PLAQUETTE	2	2	2	2		
27	90101–14003	BOLT BOULON	2	2	2	2		

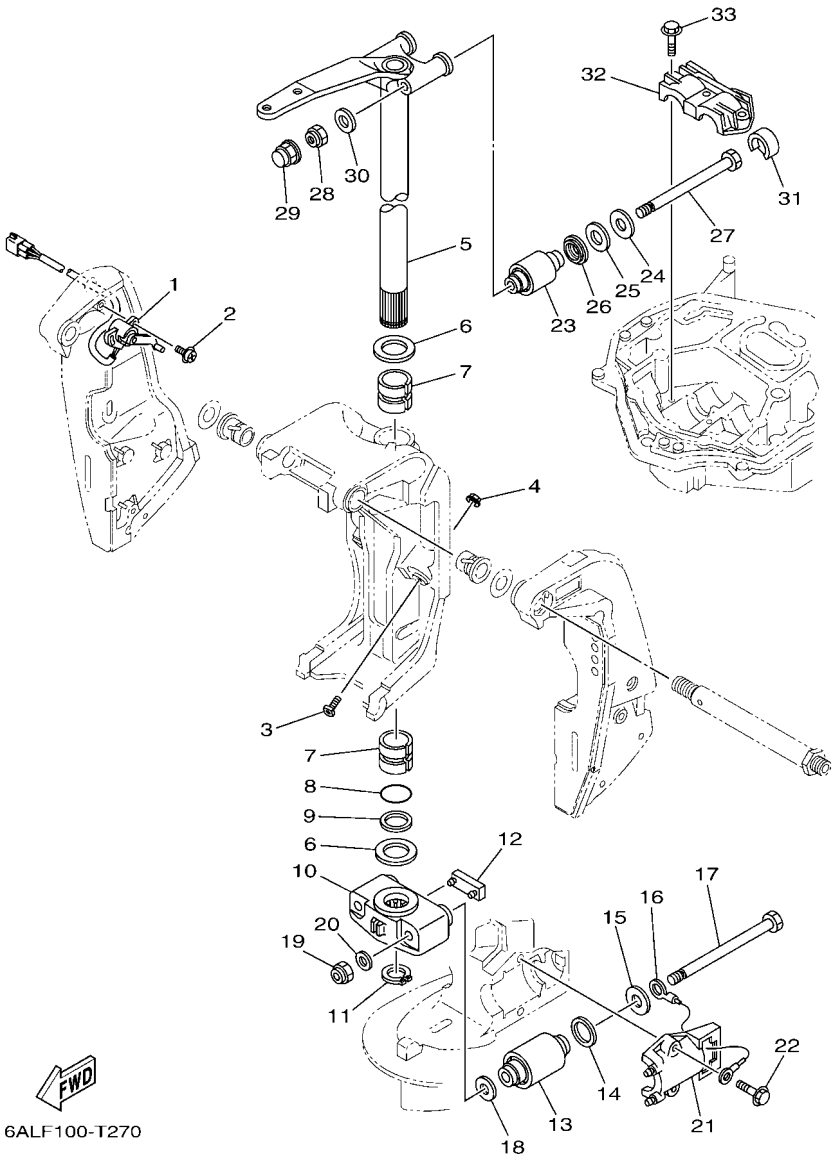

FIG. 27 BRACKET 2 — SUPPORT 2

REF. NO.	PART NO. N° PIECES	DESCRIPTION DESCRIPTION	6ALL	6ASK	6AML	6ATK		REMARKS REMARQUES
28	90185–14M00	NUT, SELF-LOCKING ECROU,AUTO-BLOQUANT	2	2	2	2		
29	6DA–44194–00	CAP CAPUCHON	2	2	2	2		
30	92995–14600	WASHER RONDELLE	2	2	2	2		
31	69J–44533–00	DAMPER, UPPER MOUNT RUBBER COUVERCLE, SUSPENSION INFERIEU	2	2	2	2		
32	61A–44511–01	COVER, UPPER MOUNT COUVERCLE, SUSPENSION SUPERIEU	1	1	1	1		
33	90119–10024	BOLT, WITH WASHER BOULON, AVEC RONDELLE	3	3	3	3		

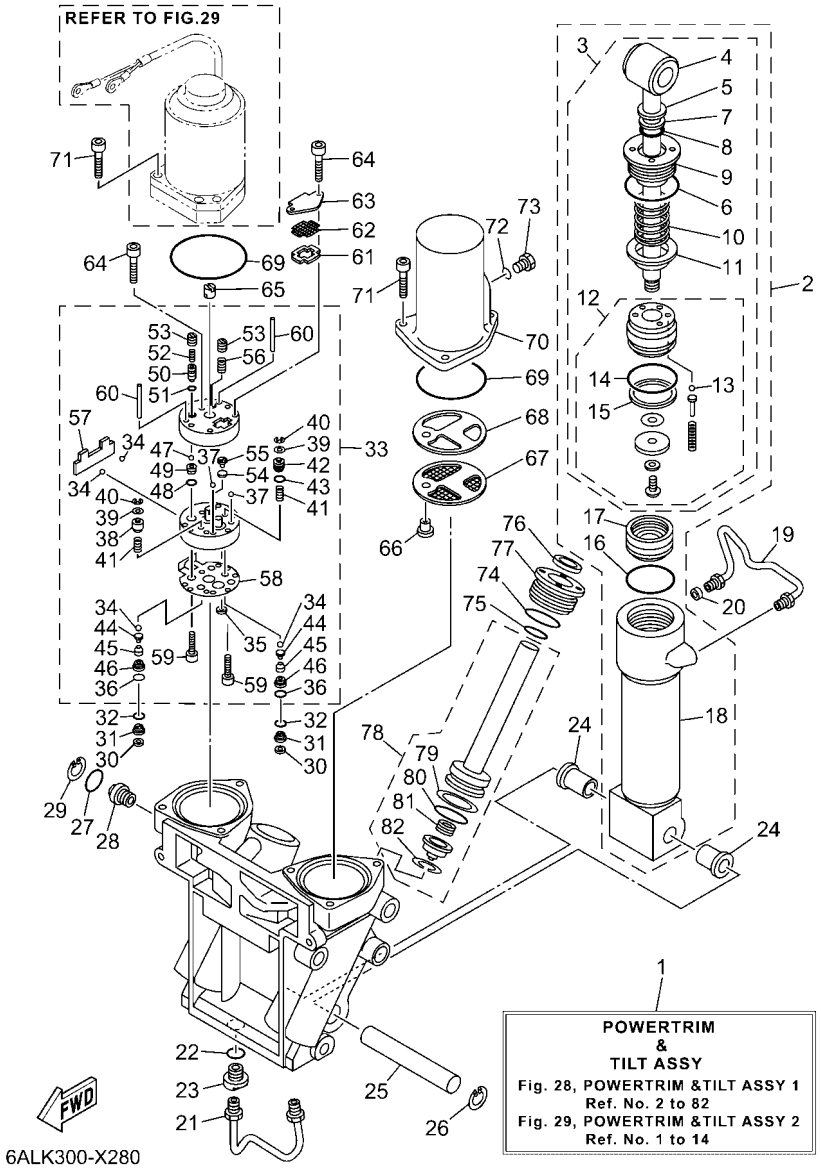

FIG. 28 POWER TRIM & TILT ASSY 1 — PUISSANCE PARER ET INCLINER 1

REF. NO.	PART NO. N° PIECES	DESCRIPTION DESCRIPTION	6ALL	6ASK	6AML	6ATK		REMARKS REMARQUES
1	69J–43800–13–8D	POWER TRIM & TILT ASSY PUISSANCE PARER ET INCLINER (E	1	1	1	1		
2	6CE–43840–01	POWER TILT ASSY PUISSANCE INCLINER (ENS.)	1	1	1	1		
3	6CE–43810–01	.TILT PISTON SUB ASSY .INCLINER PISTON AUXILIAIRE(ENS	1	1	1	1		
4	69J–43801–01	..ROD ..TIGE	1	1	1	1		
5	93106–19001	..OIL SEAL ..JOINT SPY	1	1	1	1		
6	63P–43861–20	..O-RING ..JOINT TORIQUE	1	1	1	1		
7	6H1–43872–00	..RING, BACK UP ..RESSORT	1	1	1	1		
8	61A–4389H–01	..O-RING ..JOINT TORIQUE	1	1	1	1		
9	61A–43811–00	..SCREW, CYLINDER END ..VIS, CYLINDRE RACCORD	1	1	1	1		
10	69J–4384H–00	..SPRING ..RESSORT	1	1	1	1		
11	69J–4382E–00	..ADAPTOR 2 ..ADAPTEUR 2	1	1	1	1		
12	6CE–4380P–00	..PISTON SUB ASSY ..PISTON AUXILIAIRE (ENS.)	1	1	1	1		
13	93505–32038	...BALL ...BILLE	5	5	5	5		
14	61A–43861–00	...O-RING ...JOINT TORIQUE	1	1	1	1		
15	61A–43871–00	...RING, BACK UP ...SEGMENT	1	1	1	1		
16	61A–43861–00	.O-RING .JOINT TORIQUE	1	1	1	1		
17	6H1–43814–11	.PISTON, FREE .PISTON	1	1	1	1		
18	61A–43813–02	.CYLINDER, TILT .CYLINDRE	1	1	1	1		
19	69J–43835–10	PIPE TUYAU	1	1	1	1		
20	69J–4388J–00	PLUG 2 BOUCHON 2	1	1	1	1		
21	69J–43833–02	PIPE TUYAU	1	1	1	1		
22	93210–17239	O-RING JOINT TORIQUE	1	1	1	1		
23	69J–4388E–01	BOLT ,SCREW VIS	1	1	1	1		
24	90386–18M14	BUSH DOUILLE	2	2	2	2		
25	61A–43818–00	PIN, LOWER SHOCK MOUNT AXE, INFERIEUR AMORTISSEUR	1	1	1	1		
26	61A–43876–01	RING, SNAP RESSORT	1	1	1	1		
27	6D8–43863–00	O-RING JOINT TORIQUE	1	1	1	1		

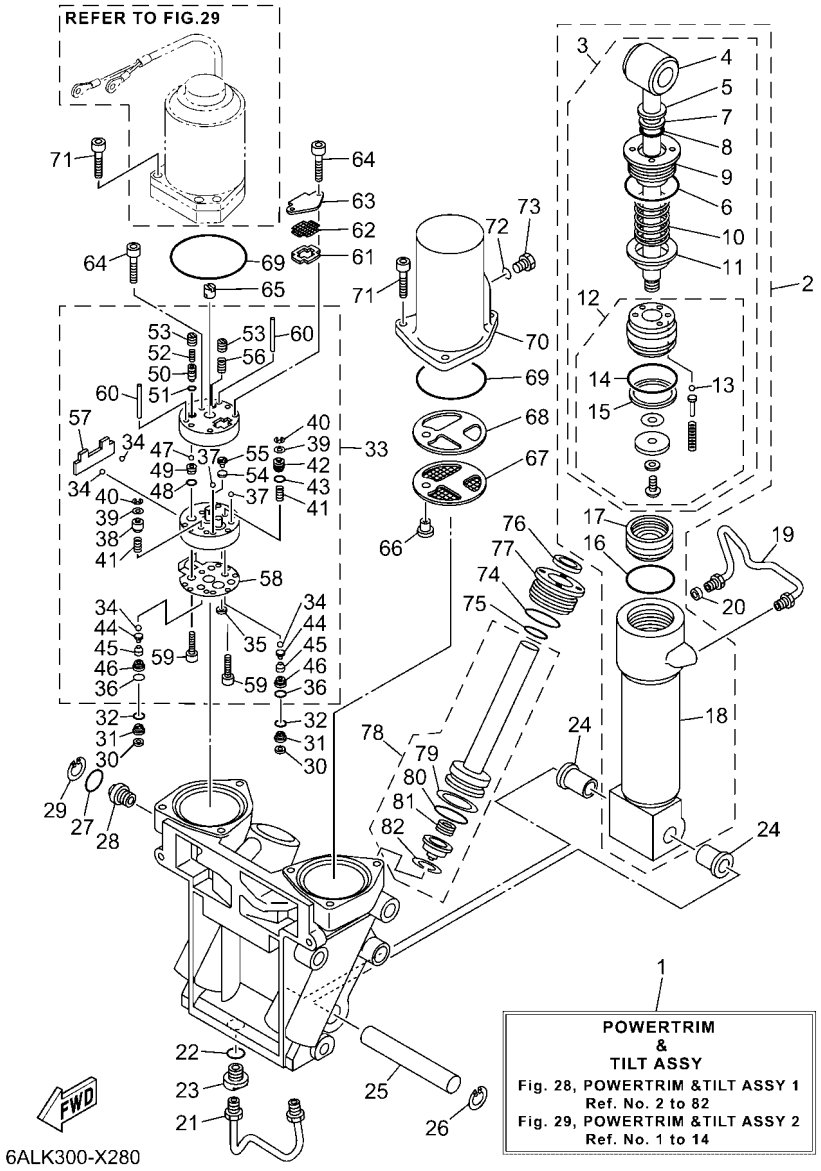

FIG. 28 POWER TRIM & TILT ASSY 1 — PUISSANCE PARER ET INCLINER 1

REF. NO.	PART NO. N° PIECES	DESCRIPTION DESCRIPTION	6ALL	6ASK	6AML	6ATK		REMARKS REMARQUES
28	69J–43845–00	SCREW, MANUAL RELEASE VIS	1	1	1	1		
29	6H1–43875–00	RING, SNAP RESSORT	1	1	1	1		
30	69J–4381C–00	FILTER 3 FILTRE 3	2	2	2	2		
31	69J–43899–01	PLATE STOPPER PLAQUETTE	2	2	2	2		
32	69J–4389J–00	O-RING JOINT TORIQUE	2	2	2	2		
33	69J–43830–01	GEAR PUMP ASSY POMPE A PIGNON (ENS.)	1	1	1	1		
34	93505–32038	.BALL .BILLE	4	4	4	4		
35	69J–4381C–00	.FILTER 3 .FILTRE 3	1	1	1	1		
36	69J–4389J–00	.O-RING .JOINT TORIQUE	2	2	2	2		
37	93503–16003	.BALL .BILLES	2	2	2	2		
38	6CJ–4384M–00	.PISTON, SHUTTLE 2 .PISTON 2	1	1	1	1		
39	69A–4384F–00	.SEAL, MAIN VALVE .JOINT	2	2	2	2		
40	99002–03600	.CIRCLIP .CIRCLIP	2	2	2	2		
41	69J–43894–00	.SPRING, SHUTTLE RETURN .RESSORT	2	2	2	2		
42	6CJ–43841–00	.PISTON, SHUTTLE .PISTON	1	1	1	1		
43	6H1–43883–00	.O-RING .JOINT TORIQUE	1	1	1	1		
44	60V–4386A–00	.PIN, ABSORBER VALVE .GOUPILLE, SOUPAPE	2	2	2	2		
45	69J–43853–00	.SPRING, MAIN VALVE .RESSORT	2	2	2	2		
46	6CJ–43893–00	.WASHER .RONDELLE	2	2	2	2		
47	93501–08001	.BALL .BILLE	2	2	2	2		
48	93210–08391	.O-RING .JOINT TORIQUE	1	1	1	1		
49	69J–43851–00	.SEAT, RELIEF VALVE .SIEGE	1	1	1	1		
50	63P–43844–20	.PIN, VALVE SUPPORT .GOUPILLE	1	1	1	1		
51	93210–064A5	.O-RING .JOINT TORIQUE	1	1	1	1		
52	69J–43855–00	.SPRING, UP RELIEF .RESSORT	1	1	1	1		
53	6CJ–43843–00	.SCREW, VALVE LOCK .VIS	2	2	2	2		
54	6H1–4384G–11	.SEAL, RELIEF VALVE .JOINT	1	1	1	1		

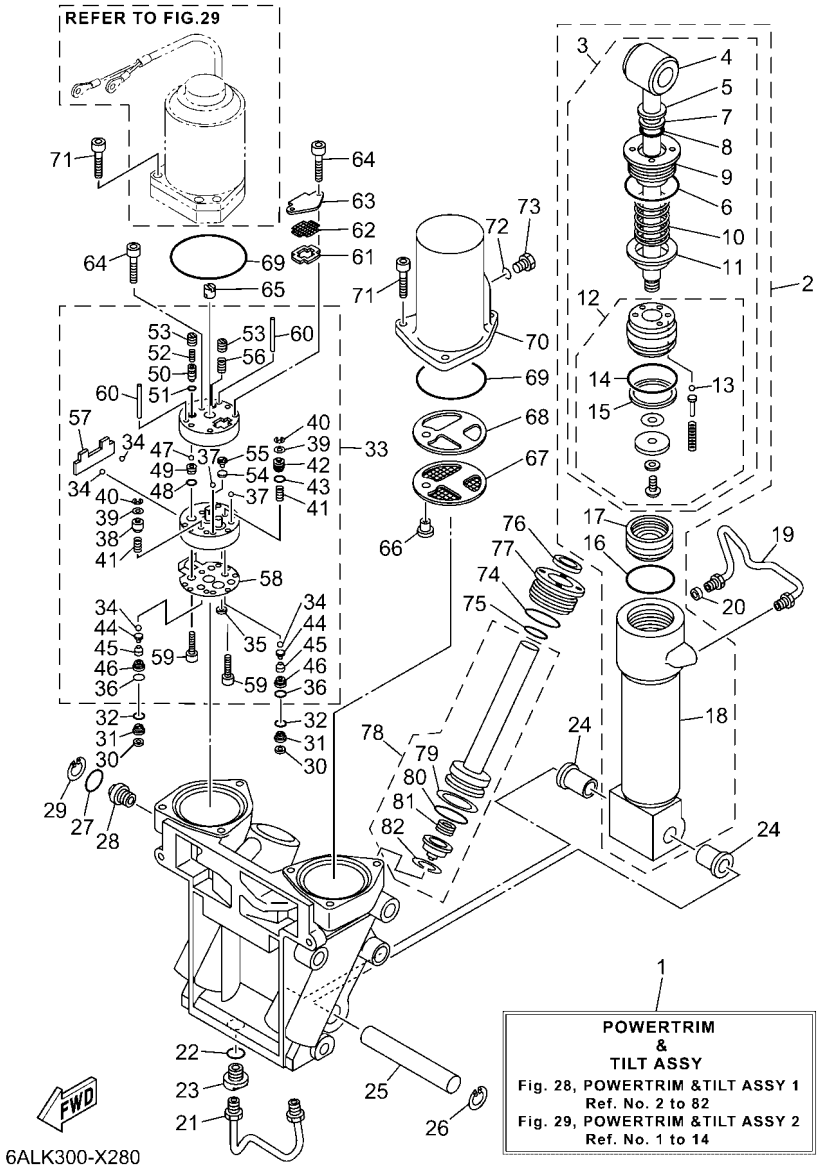

FIG. 28 POWER TRIM & TILT ASSY 1 — PUISSANCE PARER ET INCLINER 1

REF. NO.	PART NO. N° PIECES	DESCRIPTION DESCRIPTION	6ALL	6ASK	6AML	6ATK		REMARKS REMARQUES
55	6H1–43844–10	.PIN, VALVE SUPPORT .GOUPILLE	1	1	1	1		
56	6H1–43856–10	.SPRING, DOWN RELIEF .RESSORT	1	1	1	1		
57	69J–43854–00	.SPRING, MANUAL RELEASE .RESSORT	1	1	1	1		
58	69J–4384G–00	.SEAL, RELIEF VALVE .JOINT	1	1	1	1		
59	91318–05025	.BOLT .BOULON	2	2	2	2		
60	93604–35236	.PIN, DOWEL .CLAVETTE	2	2	2	2		
61	69J–43871–00	RING, BACK UP SEGMENT	1	1	1	1		
62	69J–43816–00	FILTER 1 FILTRE 1	1	1	1	1		
63	69J–4381J–00	PLATE PLAQUE	1	1	1	1		
64	91318–05040	BOLT BOULON	3	3	3	3		
65	69J–43831–00	CONNECTOR, SHAFT RACCORD	1	1	1	1		
66	69J–4388H–00	PLUG BOUCHON	1	1	1	1		
67	69J–43817–00	FILTER 2 FILTRE 2	1	1	1	1		
68	69J–4388F–00	SPACER ENTRETOISE	1	1	1	1		
69	93210–66001	O-RING JOINT TORIQUE	2	2	2	2		
70	69J–43828–00	BODY, RESERVOIR CORPS	1	1	1	1		
71	69J–43888–00	BOLT, SOCKET BOULON	6	6	6	6		
72	93210–09165	O-RING JOINT TORIQUE	1	1	1	1		
73	6H1–43829–00	PLUG, RESERVOIR BOUCHON	1	1	1	1		
74	61A–43861–00	O-RING JOINT TORIQUE	2	2	2	2		
75	6D8–43863–00	O-RING JOINT TORIQUE	2	2	2	2		
76	63P–43812–20	SEAL, DUST JOINT	2	2	2	2		
77	61A–43821–02	SCREW, TRIM CYLINDER END VIS	2	2	2	2		
78	69J–43820–01	TRIM PISTON SUB ASSY PARER PISTON AUXILIAIRE (ENS.)	2	2	2	2		
79	61A–43874–00	.RING, BACK UP .RESSORT	1	1	1	1		
80	61A–43864–00	.O-RING .JOINT TORIQUE	1	1	1	1		
81	61A–4384H–10	.SPRING .RESSORT	1	1	1	1		

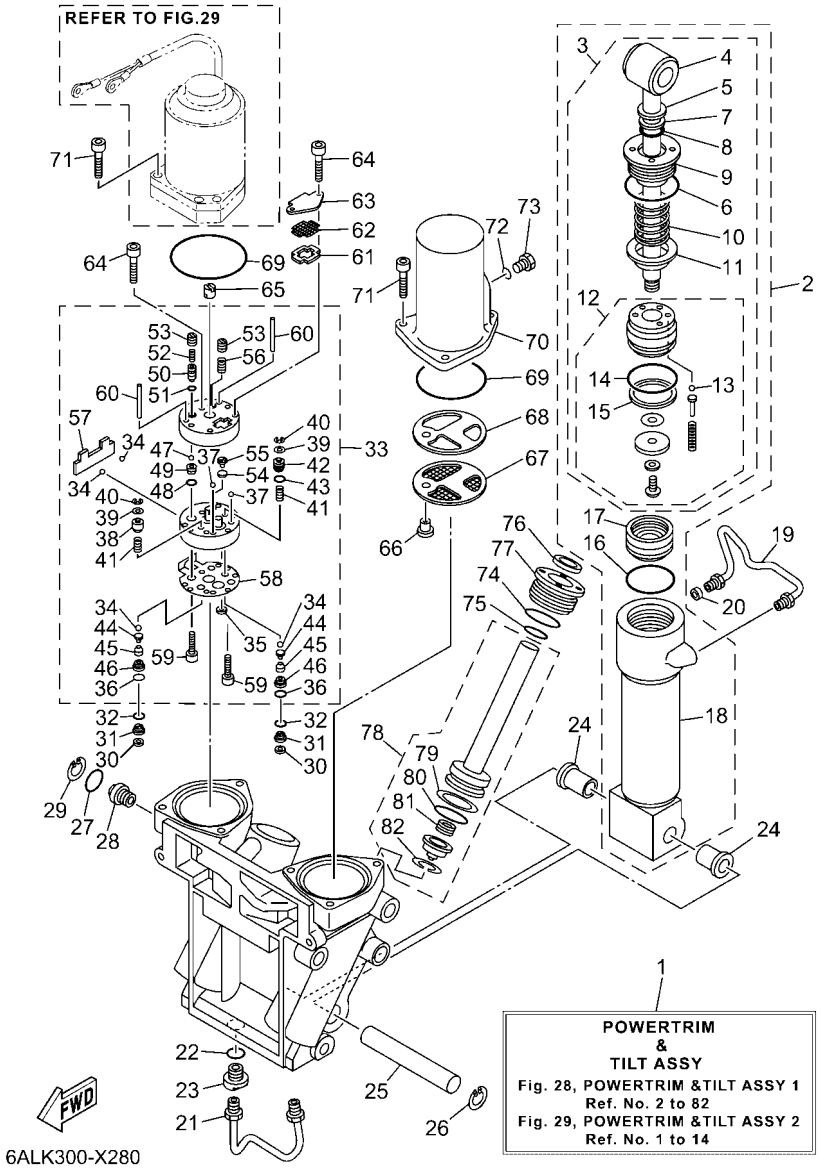

FIG. 28 POWER TRIM & TILT ASSY 1 — PUISSANCE PARER ET INCLINER 1

REF. NO.	PART NO. N° PIECES	DESCRIPTION DESCRIPTION	6ALL	6ASK	6AML	6ATK		REMARKS REMARQUES
82	61A–43875–10	.RING, SNAP .RESSORT	1	1	1	1		

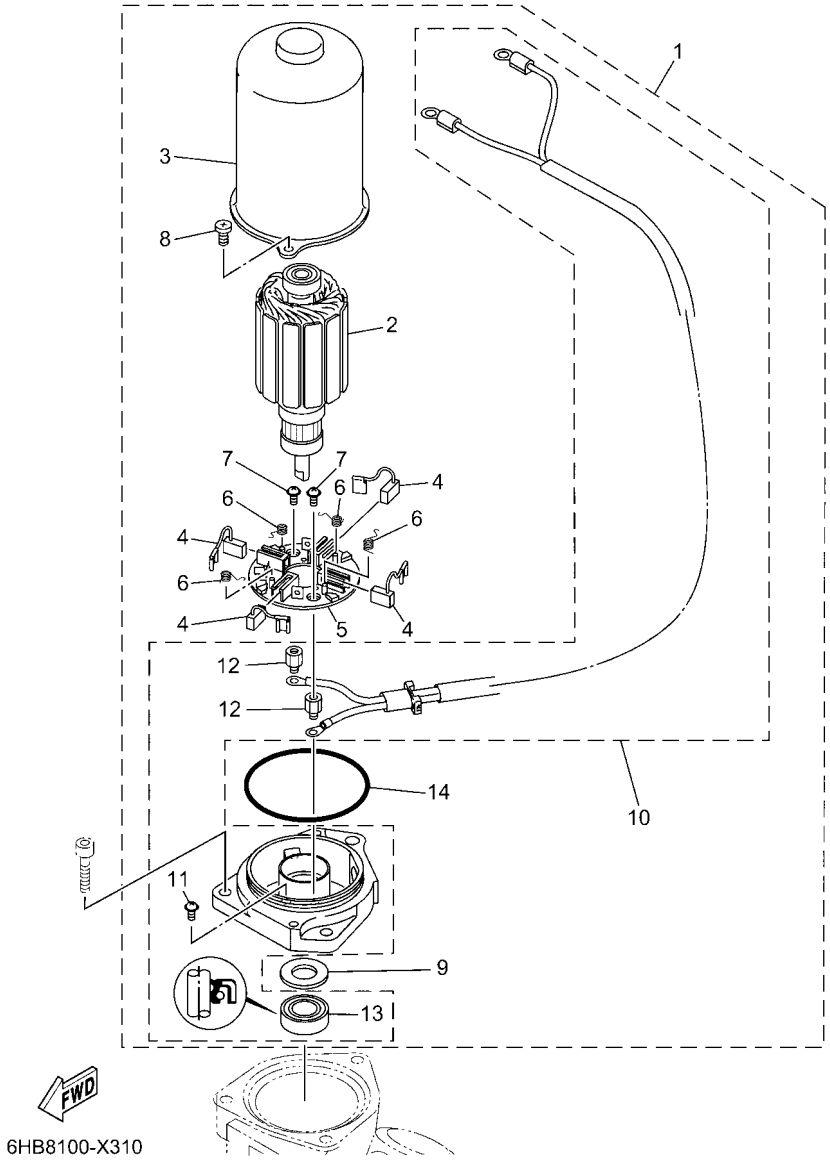

FIG. 29 POWER TRIM & TILT ASSY 2 — PUISSANCE PARER ET INCLINER 2

REF. NO.	PART NO. N° PIECES	DESCRIPTION DESCRIPTION	6ALL	6ASK	6AML	6ATK		REMARKS REMARQUES
1	69J–43880–20	MOTOR ASSY MOTEUR (ENS.)	1	1	1	1		
2	6KA–43805–00	.ARMATURE ASSY .INDUIT (ENS.)	1	1	1	1		
3	6KA–43804–01	.STATOR ASSY .STATOR (ENS.)	1	1	1	1		
4	6KA–43892–00	.BRUSH 2 .BALAI 2	4	4	4	4		
5	6KA–43806–00	.BRUSH HOLDER ASSY .PORTE-BALAI (ENS.)	1	1	1	1		
6	6KA–4386K–00	.SPRING, BRUSH .RESSORT, BALAI	4	4	4	4		
7	97602–04306	.SCREW, PAN HEAD WITH WASHER .VIS, AVEC RONDELLE	2	2	2	2		
8	6KA–43879–00	.SCREW, WITH WASHER .VIS, AVEC RONDELLE	2	2	2	2		
9	6KA–4387G–00	.WASHER .RONDELLE	1	1	1	1		
10	69J–43881–20	.FRAME, END .BATI	1	1	1	1		
11	97602–04308	..SCREW, PAN HEAD WITH WASHER ..VIS, AVEC RONDELLE	1	1	1	1		
12	6KA–4388F–00	..SPACER ..ENTRETOISE	2	2	2	2		
13	6KA–43882–00	..OIL SEAL ..JOINT SPI	1	1	1	1		
14	6KA–43862–00	.O-RING .JOINT TORIQUE	1	1	1	1		

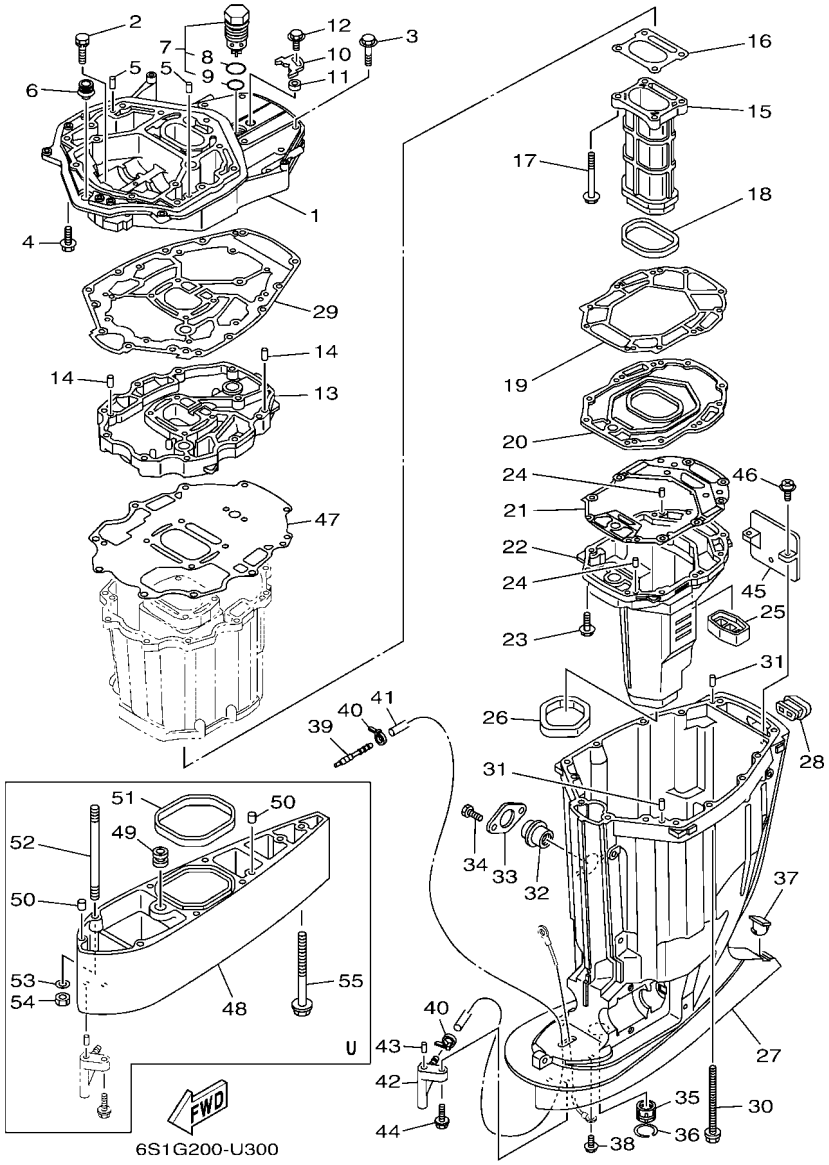

FIG. 30 UPPER CASING — FOURREAU

REF. NO.	PART NO. N° PIECES	DESCRIPTION DESCRIPTION	6ALL	6ASK	6AML	6ATK		REMARKS REMARQUES
1	69J–41137–10–CA	GUIDE, EXHAUST COLLECTEUR D'ECHAPPEMENT	1	1	1	1		
2	90119–08182	BOLT, WITH WASHER BOULON, AVEC RONDELLE	2	2	2	2		
3	97E75–10545	BOLT, HEXAGON W/W DEEP RECESS VIS HEXAGONAL AVC RONDELLE	7	7	7	7		
4	97E75–10535	BOLT, HEXAGON W/W DEEP RECESS VIS HEXAGONAL AVC RONDELLE	7	7	7	7		
5	93608–16M16	PIN, DOWEL AXE	2	2	2	2		
6	6E5–42724–01	GROMMET PASSE-FIL	1	1	1	1		
7	6AW–11371–10	PRESSURE CONTROL VALVE ASSY SOUPAPE, COMMANDE DE PRESSION	1	1	1	1		
8	93210–347A1	.O-RING .JOINT TORIQUE	1	1	1	1		
9	93210–28543	.O-RING .JOINT TORIQUE	1	1	1	1		
10	69J–12233–00	PLATE, GUIDE STOPPER 1 PLAQUE, GUIDE BUTEE 1	1	1	1	1		
11	90387–06037	COLLAR COLLERETTE	1	1	1	1		
12	97E95–06520	BOLT, HEXAGON W/W DEEP RECESS VIS HEXAGONAL AVC RONDELLE	1	1	1	1		
13	69J–41131–11–CA	MANIFOLD, EXT. 1 PIPE D'ECHAPPEMENT	1	1	1	1		
14	93608–16M16	PIN, DOWEL AXE	2	2	2	2		
15	69J–41132–20–9S	MANIFOLD, EXHAUST PIPE D'ECHAPPEMENT	1	1	1	1		
16	6P2–41134–00	GASKET, EXHAUST MANIFOLD JOINT, PIPE D'ECHAPPEMENT	1	1	1	1		
17	97E75–08590	BOLT, HEXAGON W/W DEEP RECESS VIS HEXAGONAL AVC RONDELLE	4	4	4	4		
18	69J–41138–00	SEAL, EXT. 1 JOINT DE GROUPE 1	1	1	1	1		
19	69J–41135–A0	GASKET, EXHAUST MANIFOLD JOINT, PIPE D'ECHAPPEMENT	1	1	1	1		
20	69J–45181–10–9S	PLATE PLAQUETTE	1	1	1	1		
21	6S1–41136–01	GASKET, EXHAUST MANIFOLD 4 JOINT, PIPE D'ECHAPPEMENT 4	1	1	1	1		
22	69J–14711–00–9S	MUFFLER 1 POT D'ECHAPPEMENT 1	1	1	1	1		
23	97E75–08535	BOLT, HEXAGON W/W DEEP RECESS VIS HEXAGONAL AVC RONDELLE	10	10	10	10		
24	93606–19M23	PIN, DOWEL GOUPILLE	2	2	2	2		
25	69J–45127–01	SEAL JOINT	1	1	1	1		
26	69J–45123–00	GASKET, MUFFLER JOINT, POT DE DETENTE	1	1	1	1		
27	69J–45111–10–8D	CASING, UPPER FOURREAU	1	1	1	1		

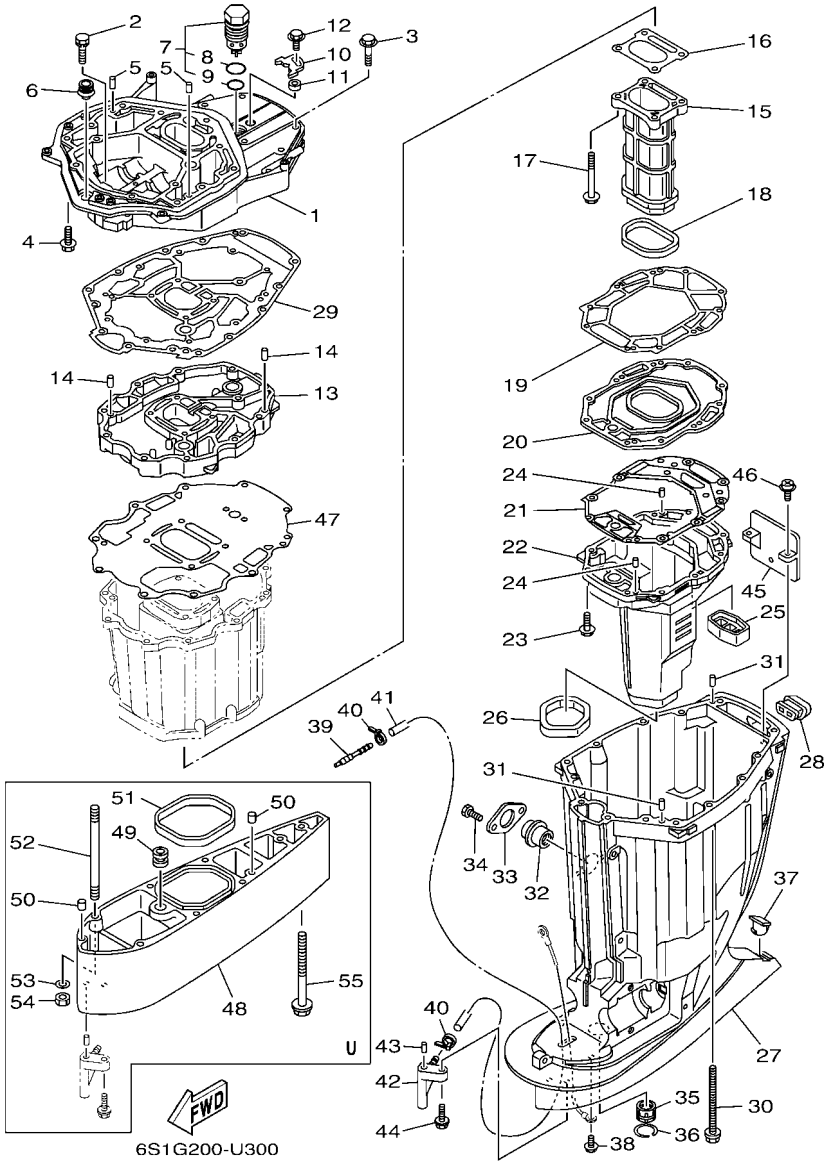

FIG. 30 UPPER CASING — FOURREAU

REF. NO.	PART NO. N° PIECES	DESCRIPTION DESCRIPTION	6ALL	6ASK	6AML	6ATK		REMARKS REMARQUES
28	69J–42769–01	SEAL, RUBBER BOURRELET, CAOUTCHOUC	1	1	1	1		
29	69J–45113–21	GASKET, UPPER CASING JOINT, TUBE D'ARBRE	1	1	1	1		
30	90119–10007	BOLT, WITH WASHER BOULON, AVEC RONDELLE	6	6	6	6		
31	93608–16M16	PIN, DOWEL AXE	2	2	2	2		
32	69J–15316–01	DAMPER 1 AMORTISSEUR 1	1	1	1	1		
33	69J–45152–10	COVER, UPPER CASING 2 CAPUCHON FOURREAU	1	1	1	1		
34	97D95–06012	BOLT, HEXAGON DEEP RECESS VIS HEXAGONAL	2	2	2	2		
35	69J–45318–01	BUSHING, DRIVE SHAFT DOUILLE, ARBRE MOTEUR	1	1	1	1		
36	93420–36M01	CIRCLIP CIRCLIP, TYPE S	1	1	1	1		
37	61A–45155–01	CAP CAPUCHON	1	1	1	1		
38	95D95–06010	BOLT, FLANGE DEEP RECESS BOULON FIXATION	1	1	1	1		
39	6E5–83558–00	END, NIPPLE RACCORD DE NIPPLE	1	1	1	1		
40	90465–11M10	CLAMP BRIDE	2	2	2	2		
41	90445–07010	HOSE (L1330) DURITE (L1330)	1	1	1	1		X(25.3") X(25.3")
	90445–07012	HOSE (L1457) DURITE (L1457)		1				U(30.3") U(30.3")
42	61A–45378–00	NIPPLE, HOSE RACCORD, TUYAU	1	1	1	1		
43	93606–12019	PIN, DOWEL GOUPILLE	1	1	1	1		
44	90119–06309	BOLT, WITH WASHER BOULON, AVEC RONDELLE	1	1	1	1		
45	69J–14624–01	COVER, EXHAUST CACHE D'ECHAPPEMENT	1	1	1	1		
46	97980–06216	SCREW, WITH WASHER VIS, AVEC RONDELLE	2	2	2	2		
47	69J–15312–02	GASKET, OIL PAN JOINT DE VENTILATEUR D'HUILE	1	1	1	1		
48	69J–45211–02–8D	EXTENSION EXTENSION		1				U(30.3") U(30.3")
49	6E5–44366–01	DAMPER, WATER SEAL 2 JOINT, TUBE D'EAU 2		1				U(30.3") U(30.3")
50	93608–12M05	PIN, DOWEL AXE		2				U(30.3") U(30.3")
51	69J–45159–00	DAMPER CAOUTCHOUC, JOINT		1				U(30.3") U(30.3")
52	90116–10012	BOLT, STUD GOUJON		6				U(30.3") U(30.3")
53	92995–10600	WASHER RONDELLE		6				U(30.3") U(30.3")

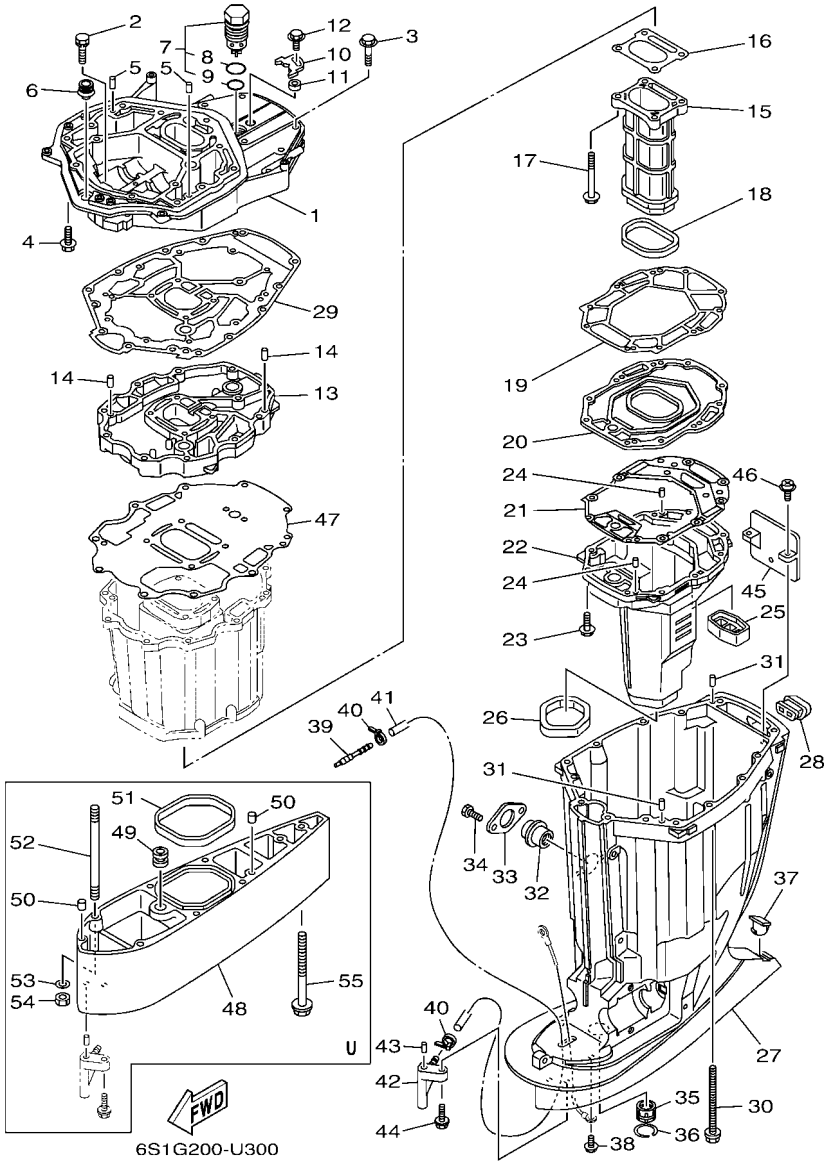

FIG. 30 UPPER CASING — FOURREAU

REF. NO.	PART NO. N° PIECES	DESCRIPTION DESCRIPTION	6ALL	6ASK	6AML	6ATK		REMARKS REMARQUES
54	95380–10600	NUT ECROU		6				U(30.3") U(30.3")
55	90119–10009	BOLT, WITH WASHER BOULON, AVEC RONDELLE		1				U(30.3") U(30.3")

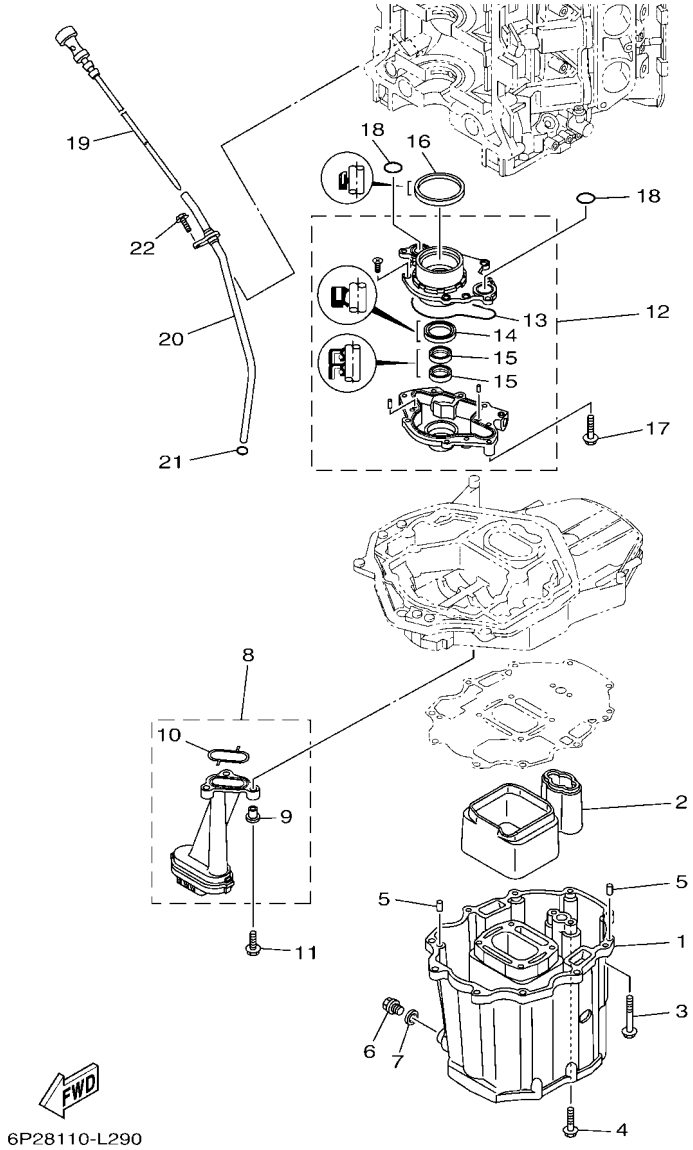

FIG. 31 OIL PAN — VENTILATEUR D'HUILE

REF. NO.	PART NO. N° PIECES	DESCRIPTION DESCRIPTION	6ALL	6ASK	6AML	6ATK		REMARKS REMARQUES
1	69J–15311–10–CA	OIL PAN VENTILATEUR D'HUILE	1	1	1	1		
2	69J–15761–00	SEAL, RUBBER 1 JOINT CAOUTCHOUC 1	1	1	1	1		
3	97E75–08560	BOLT, HEXAGON W/W DEEP RECESS VIS HEXAGONAL AVC RONDELLE	10	10	10	10		
4	97E75–08535	BOLT, HEXAGON W/W DEEP RECESS VIS HEXAGONAL AVC RONDELLE	2	2	2	2		
5	93608–16M16	PIN, DOWEL AXE	2	2	2	2		
6	90340–14M06	PLUG, STRAIGHT SCREW PLOT, FILETE DROIT	1	1	1	1		
7	90430–14M09	GASKET JOINT	1	1	1	1		
8	69J–13411–01	STRAINER, OIL FILTRE, HUILE	1	1	1	1		
9	90387–06263	.COLLAR .COLLERETTE	3	3	3	3		
10	69J–13415–00	.SEAL, OIL STRAINER .JOINT, FILTRE A HUILE	1	1	1	1		
11	95812–06025	BOLT, FLANGE BOULON	3	3	3	3		
12	6P2–13300–00	OIL PUMP ASSY POMPE A HUILE COMPLETE	1	1	1	1		
13	69J–13329–01	.GASKET, PUMP COVER .JOINT, COUVERCLE DE POMPE	1	1	1	1		
14	6AW–13119–00	.OIL SEAL .JOINT SPY	1	1	1	1		
15	69J–13631–00	.OIL SEAL .JOINT SPY	2	2	2	2		
16	69J–11355–00	SEAL, CYLINDER 1 JOINT, SPY CYLINDRE	1	1	1	1		
17	97E75–06540	BOLT, HEXAGON W/W DEEP RECESS VIS HEXAGONAL AVC RONDELLE	4	4	4	4		
18	93210–25552	O-RING JOINT TORIQUE	2	2	2	2		
19	6P2–15362–10	PLUG, OIL LEVEL PLOT, NIVEAU D'HUILE	1	1	1	1		
20	6P2–15377–10	GUIDE, INLET GUIDE D'ADMISSION	1	1	1	1		
21	93210–19MJ3	O-RING JOINT TORIQUE	1	1	1	1		
22	95D95–06016	BOLT, FLANGE DEEP RECESS BOULON FIXATION	1	1	1	1		

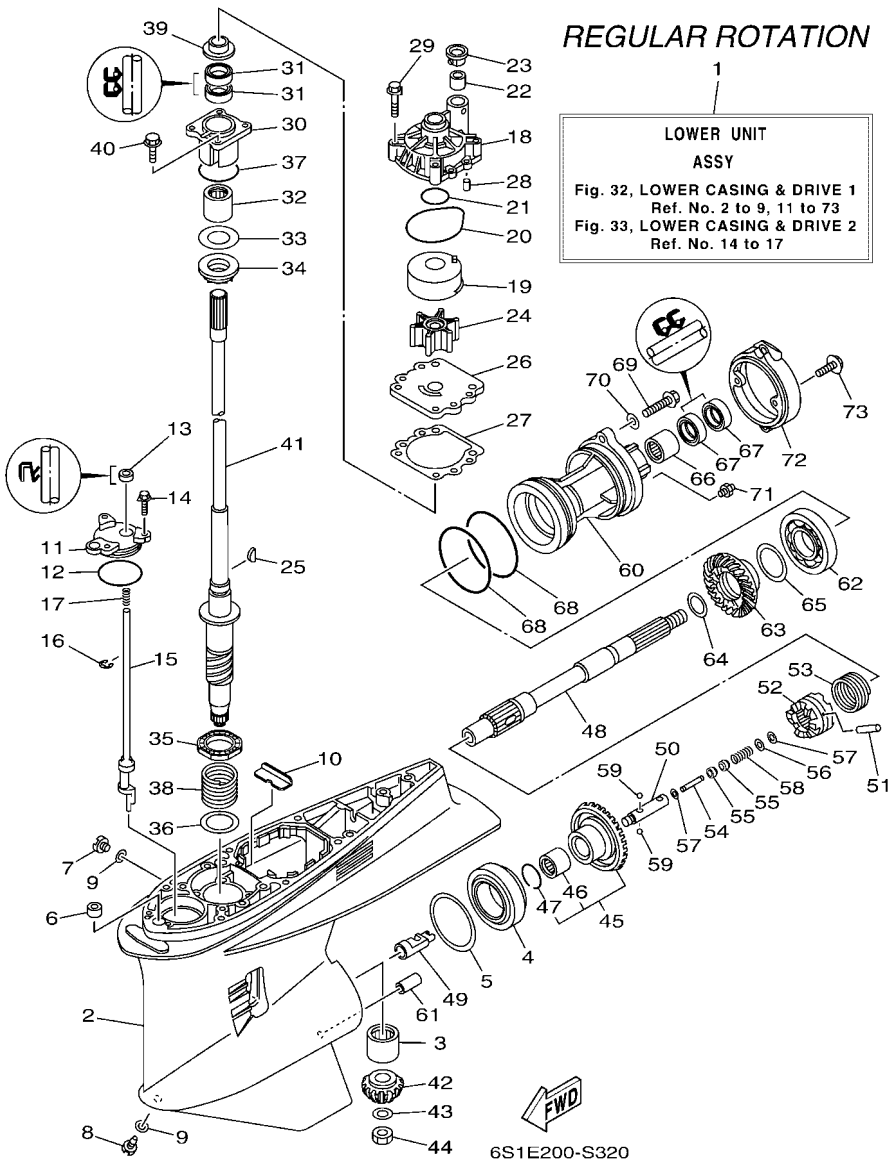

FIG. 32 LOWER CASING & DRIVE 1 — BOITIER D'HELICE TRANSMISSION1

REF. NO.	PART NO. N° PIECES	DESCRIPTION DESCRIPTION	6ALL	6ASK	6AML	6ATK		REMARKS REMARQUES
1	6AS–45300–00–8D	LOWER UNIT ASSY UNITE INFERIEURE (ENS.)	1	1				X(25.3"),RH X(25.3"),RH
	6AS–45300–10–8D	LOWER UNIT ASSY UNITE INFERIEURE (ENS.)		1				U(30.3"),RH U(30.3"),RH
2	6P2–45301–00–8D	CASING, LOWER BEQUILLE	1	1				
3	93311–83280	BEARING ROULEMENT	1	1				
4	93332–000W1	BEARING ROULEMENT	1	1				
5	61A–45567–00	SHIM (T:0.10MM) CALE (T:0.10MM)	1	1				UR UR
	61A–45567–10	SHIM (T:0.12MM) CALE (T:0.12MM)	1	1				UR UR
	61A–45567–20	SHIM (T:0.15MM) CALE (T:0.15MM)	1	1				UR UR
	61A–45567–30	SHIM (T:0.18MM) CALE (T:0.18MM)	1	1				UR UR
	61A–45567–40	SHIM (T:0.30MM) CALE (T:0.30MM)	1	1				UR UR
	61A–45567–50	SHIM (T:0.40MM) CALE (T:0.40MM)	1	1				UR UR
	61A–45567–60	SHIM (T:0.50MM) CALE (T:0.50MM)	1	1				UR UR
6	663–44366–01	DAMPER, WATER SEAL 2 JOINT, TUBE D'EAU 2	1	1				
7	90340–08002	PLUG, STRAIGHT SCREW PLOT, FILETE DROIT	1	1				
8	688–45341–10	PLUG, DRAIN BOUCHON DE VIDANGE	1	1				
9	90430–08003	GASKET JOINT	2	2				
10	61A–45376–00	GUIDE, SEAL DAMPER BUTEE, JOINT CAOUTCHOUC	1	1				
11	61A–45321–01	PLATE PLAQUETTE	1	1				
12	93210–64488	O-RING JOINT TORIQUE	1	1				
13	93106–09014	OIL SEAL JOINT SPY	1	1				
14	90119–06286	BOLT, WITH WASHER BOULON, AVEC RONDELLE	3	3				
15	69J–44150–00	SHIFT CAM ASSY CAME D'INVERSION	1	1				
16	99001–08600	CIRCLIP CIRCLIP	1	1				
17	90501–11M10	SPRING, COMPRESSION RESSORT, COMPRESSION	1	1				
18	61A–44311–01	HOUSING, WATER PUMP CORPS, POMPE A EAU	1	1				
19	61A–44322–02	INSERT, CARTRIDGE CUVETTE	1	1				
20	93210–86M38	O-RING JOINT TORIQUE	1	1				

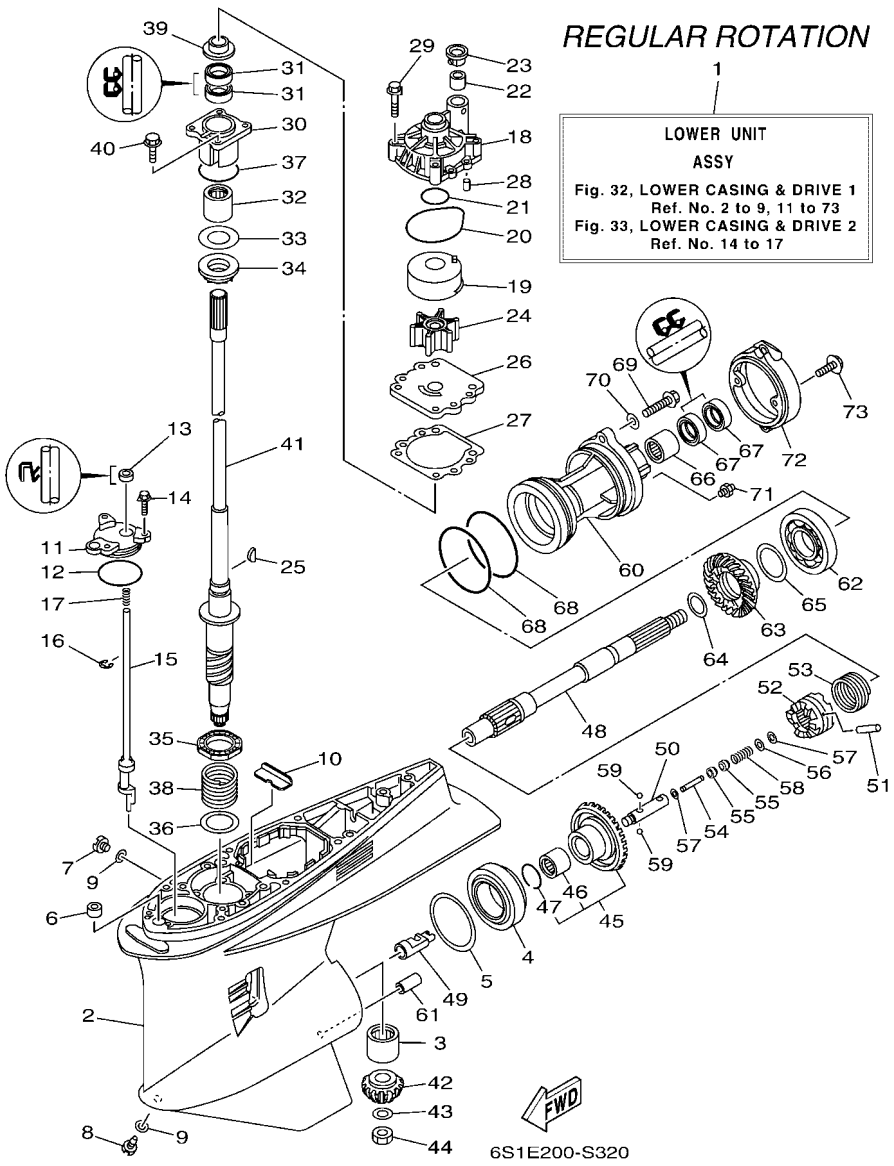

FIG. 32 LOWER CASING & DRIVE 1 — BOITIER D'HELICE TRANSMISSION1

REF. NO.	PART NO. N° PIECES	DESCRIPTION DESCRIPTION	6ALL	6ASK	6AML	6ATK		REMARKS REMARQUES
21	93210–37160	O-RING JOINT TORIQUE	1	1				
22	6E5–44365–01	DAMPER, WATER SEAL 1 JOINT, TUBE D'EAU 1	1	1				
23	6E5–44312–00	COVER, WATER PUMP HOUSING COUVERCLE	1	1				
24	6E5–44352–01	IMPELLER TURBINE	1	1				
25	90280–04M05	KEY, WOODRUFF CLAVETTE, DEMI-LUNE	1	1				
26	6G5–44323–01	OUTER PLATE, CARTRIDGE PLAQUE EXTERIEURE	1	1				
27	6E5–44315–A0	GASKET, WATER PUMP JOINT, POMPE A EAU	1	1				
28	93606–12019	PIN, DOWEL GOUPILLE	2	2				
29	90119–08191	BOLT, WITH WASHER BOULON, AVEC RONDELLE	4	4				
30	61A–45331–00–9S	HOUSING, BEARING FLASQUE, ROULEMENT	1	1				
31	93101–28019	OIL SEAL JOINT SPY	2	2				
32	93317–330U2	BEARING ROULEMENT	1	1				
33	61A–45587–00	SHIM (T:0.10MM) CALE (T:0.10MM)	1	1				UR UR
	61A–45587–10	SHIM (T:0.12MM) CALE (T:0.12MM)	1	1				UR UR
	61A–45587–20	SHIM (T:0.15MM) CALE (T:0.15MM)	1	1				UR UR
	61A–45587–30	SHIM (T:0.18MM) CALE (T:0.18MM)	1	1				UR UR
	61A–45587–40	SHIM (T:0.30MM) CALE (T:0.30MM)	1	1				UR UR
	61A–45587–50	SHIM (T:0.40MM) CALE (T:0.40MM)	1	1				UR UR
	61A–45587–60	SHIM (T:0.50MM) CALE (T:0.50MM)	1	1				UR UR
34	93341–93020	BEARING CERVEAUX DE DIRECTION	1	1				
35	93341–34019	BEARING CERVEAUX DE DIRECTION	1	1				
36	90201–42014	WASHER, PLATE RONDELLE, PLATE	1	1				
37	93210–55M14	O-RING JOINT TORIQUE	1	1				
38	90501–450A2	SPRING, COMPRESSION RESSORT, COMPRESSION	1	1				
39	6E5–45344–00	COVER, OIL SEAL FLASQE, JOINT D'HUILE	1	1				
40	97E95–08525	BOLT, HEXAGON W/W DEEP RECESS VIS HEXAGONAL AVC RONDELLE	4	4				
41	6P2–45501–01	DRIVE SHAFT COMP. ARBRE MOTEUR COMP.	1	1				X(25.3") X(25.3")

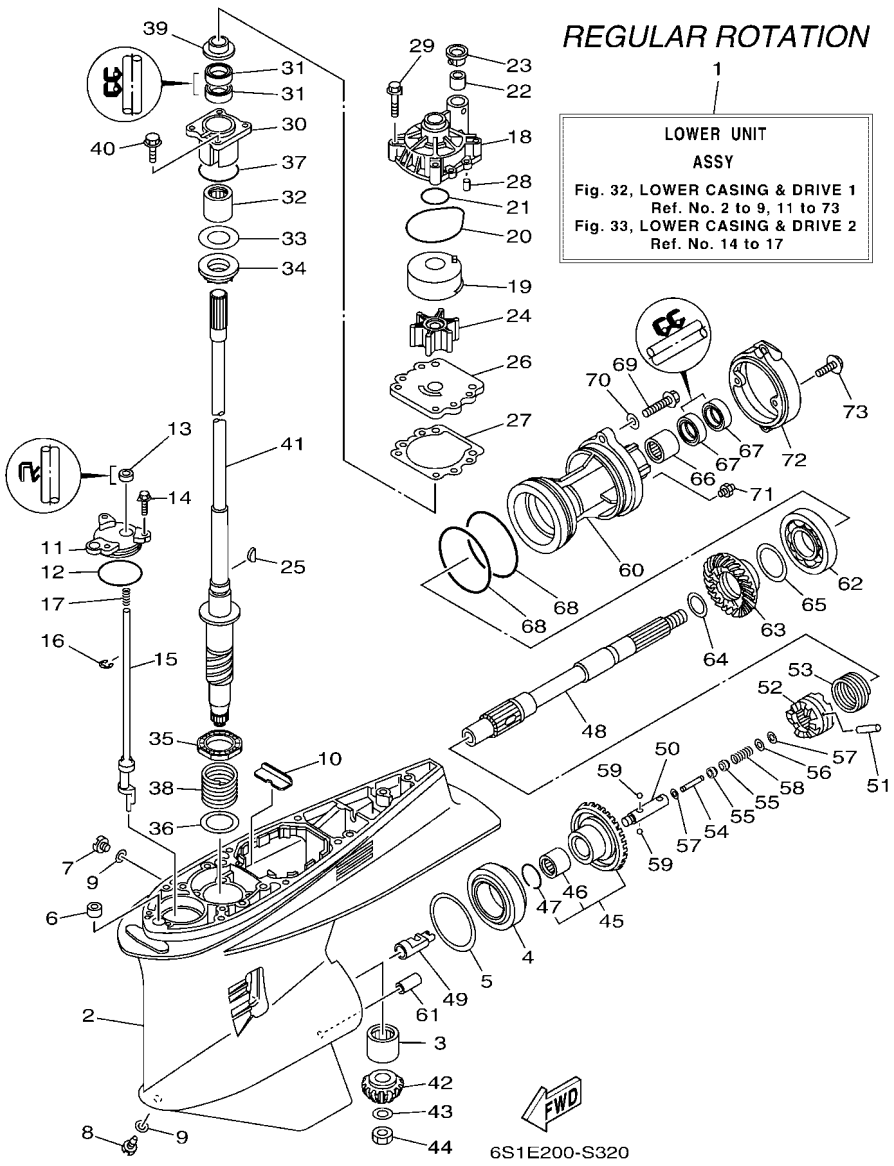

FIG. 32 LOWER CASING & DRIVE 1 — BOITIER D'HELICE TRANSMISSION1

REF. NO.	PART NO. N° PIECES	DESCRIPTION DESCRIPTION	6ALL	6ASK	6AML	6ATK		REMARKS REMARQUES
41	6P2–45501–11	DRIVE SHAFT COMP. ARBRE MOTEUR COMP.		1				U(30.3") U(30.3")
42	6FJ–45551–00	PINION (13T) PIGNON D'ATTAQUE (13D)	1	1				
43	90201–16M00	WASHER, PLATE RONDELLE, PLATE	1	1				
44	90170–16M19	NUT ECROU	1	1				
45	6FJ–45560–00	GEAR 1 (26T) PIGNON 1 (26D)	1	1				
46	93317–62891	.BEARING .ROULEMENT	1	1				
47	93450–37097	.CIRCLIP .CIRCLIP	1	1				
48	69J–45611–00	SHAFT, PROPELLER ARBRE, HELICE	1	1				
49	61A–45641–02	SHIFTER EMBRAYAGE	1	1				
50	61A–45634–01	SLIDE, SHIFT CONTRE-POUSSOIR	1	1				
51	61A–45632–00	PIN, CROSS GOUPILLE DE CRABOT	1	1				
52	69J–45631–00	CLUTCH, DOG CRABOT	1	1				
53	61A–45633–00	RING, CROSS PIN JONC, GOUPILLE CRABOT	1	1				
54	6H1–45668–00	SHAFT, FREE 1 AXE 1	1	1				
55	61A–45635–00	PLUNGER, SHIFT POUSSOIR D'EMBRAYAGE	2	2				
56	90201–02M00	WASHER, PLATE RONDELLE, PLATE	1	1				
57	90183–02M03	NUT, SPRING ECROU, RESSORT	2	2				
58	90501–10M77	SPRING, COMPRESSION RESSORT, COMPRESSION	1	1				
59	93501–04011	BALL BILLE	2	2				
60	6DX–45332–00	HOUSING, BEARING FLASQUE, ROULEMENT	1	1				
61	99590–10114	PIN, DOWEL GOUJON, D'ASSEMBLAGE	1	1				
62	93306–210U0	BEARING ROULEMENT	1	1				
63	6FJ–45571–00	GEAR 2 (26T) PIGNON 2 (26D)	1	1				
64	6P2–45578–00	SHIM (T:1.80MM) CALE (T:1.80MM)	1	1				UR UR
	6P2–45578–10	SHIM (T:1.90MM) CALE (T:1.90MM)	1	1				UR UR
	6P2–45578–20	SHIM (T:2.00MM) CALE (T:2.00MM)	1	1				UR UR
	6P2–45578–30	SHIM (T:2.10MM) CALE (T:2.10MM)	1	1				UR UR

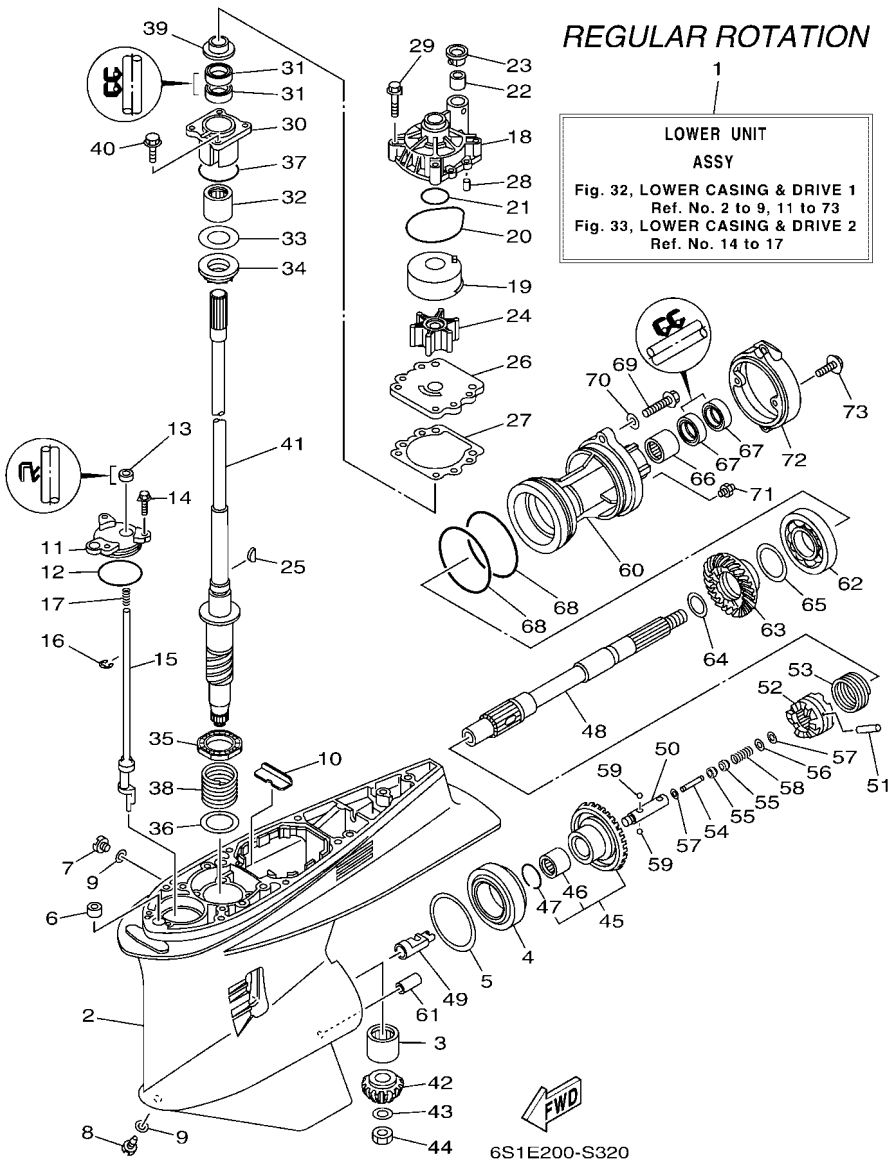

FIG. 32 LOWER CASING & DRIVE 1 — BOITIER D'HELICE TRANSMISSION1

REF. NO.	PART NO. N° PIECES	DESCRIPTION DESCRIPTION	6ALL	6ASK	6AML	6ATK		REMARKS REMARQUES
64	6P2–45578–40	SHIM (T:2.20MM) CALE (T:2.20MM)	1	1				UR UR
65	61A–45577–00	SHIM (T:0.10MM) CALE (T:0.10MM)	1	1				UR UR
	61A–45577–10	SHIM (T:0.12MM) CALE (T:0.12MM)	1	1				UR UR
	61A–45577–20	SHIM (T:0.15MM) CALE (T:0.15MM)	1	1				UR UR
	61A–45577–30	SHIM (T:0.18MM) CALE (T:0.18MM)	1	1				UR UR
	61A–45577–40	SHIM (T:0.30MM) CALE (T:0.30MM)	1	1				UR UR
	61A–45577–50	SHIM (T:0.40MM) CALE (T:0.40MM)	1	1				UR UR
	61A–45577–60	SHIM (T:0.50MM) CALE (T:0.50MM)	1	1				UR UR
66	93315–43064	BEARING ROULEMENT	1	1				
67	93101–30030	OIL SEAL JOINT SPY	2	2				
68	93211–04384	O-RING JOINT TORIQUE	2	2				
69	90105–08049	BOLT, FLANGE BOULON, A COLLERETTE	2	2				
70	90201–08023	WASHER, PLATE RONDELLE, PLATE	2	2				
71	93700–09M00	NIPPLE, GREASE PION	1	1				
72	6D0–45361–00–8D	CAP, LOWER CASING COUVERCLE, BOITIER D'HELICE	1	1				
73	97E95–08520	BOLT, HEXAGON W/W DEEP RECESS VIS HEXAGONAL AVC RONDELLE	2	2				

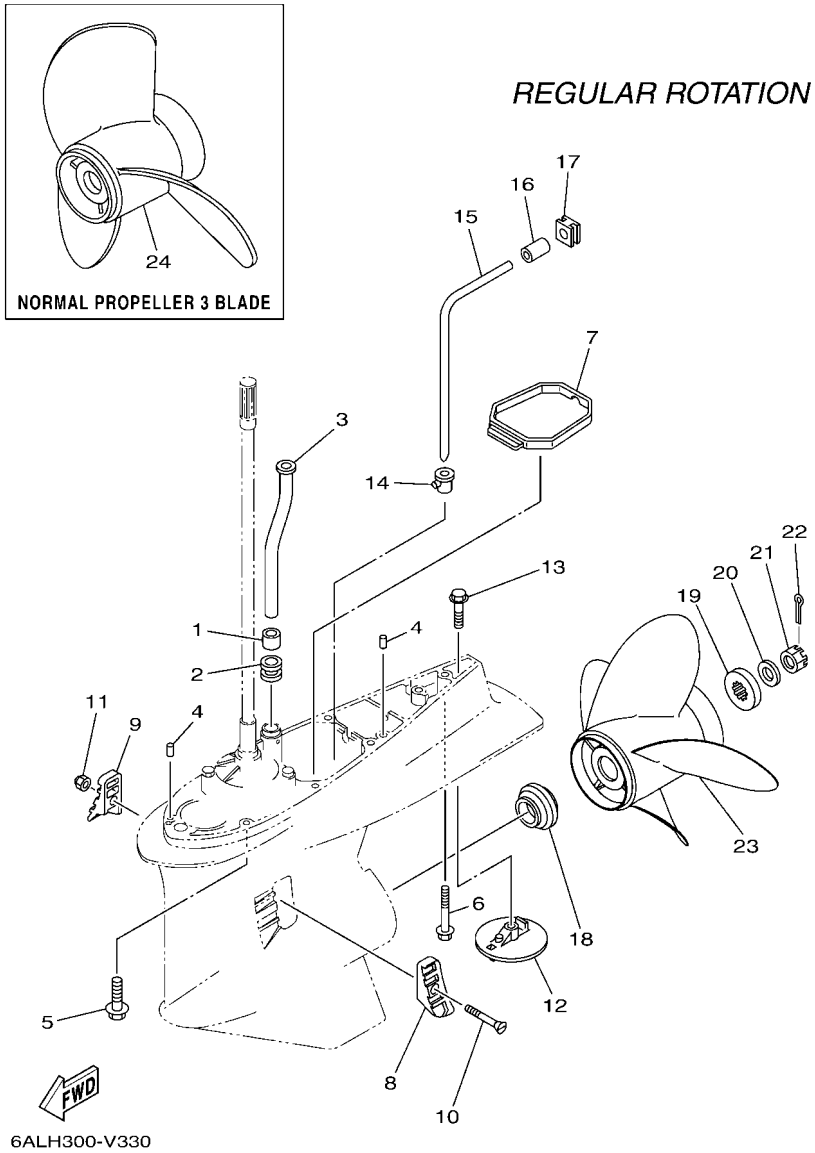

FIG. 33 LOWER CASING & DRIVE 2 — BOITIER D'HELICE TRANSMISSION2

REF. NO.	PART NO. N° PIECES	DESCRIPTION DESCRIPTION	6ALL	6ASK	6AML	6ATK		REMARKS REMARQUES
1	6E5–44365–01	DAMPER, WATER SEAL 1 JOINT, TUBE D'EAU 1	1	1				
2	6E5–44366–01	DAMPER, WATER SEAL 2 JOINT, TUBE D'EAU 2	1	1				
3	6S1–44361–02	TUBE, WATER 1 TUBE D'EAU 1	1	1				X(25.3") X(25.3")
	6S1–44361–12	TUBE, WATER 1 TUBE D'EAU 1		1				U(30.3") U(30.3")
4	93608–12M05	PIN, DOWEL AXE	2	2				
5	97E95–10645	BOLT, HEXAGON W/W DEEP RECESS VIS HEXAGONAL AVC RONDELLE	7	7				X(25.3") X(25.3")
6	90119–10072	BOLT, WITH WASHER BOULON, AVEC RONDELLE	1	1				X(25.3") X(25.3")
	90119–10008	BOLT, WITH WASHER BOULON, AVEC RONDELLE		1				U(30.3") U(30.3")
7	6D0–45375–01	DAMPER, SEAL BOURRELET, CAOUTCHOUC	1	1				
8	61A–45214–11	COVER, WATER INLET 1 GRILLE, ENTREE D'EAU 1	1	1				
9	61A–45215–11	COVER, WATER INLET 2 GRILLE, ENTREE D'EAU 2	1	1				
10	90152–05003	SCREW, COUNTERSUNK VIS, TETE NOYEE	1	1				
11	90185–05002	NUT, NYLON ECROU,AUTO-BLOQUANT	1	1				
12	6CE–45373–00	ANODE ANODE	1	1				
13	90105–10M00	BOLT, FLANGE BOULON, A COLLERETTE	1	1				
14	6D0–44367–00	DAMPER, WATER SEAL 3 JOINT TUBE D'EAU 3	1	1				
15	6D0–44362–01	TUBE, WATER 2 TUBE D'EAU 2	1	1				
16	6D0–44365–00	DAMPER, WATER SEAL 1 JOINT, TUBE D'EAU 1	1	1				
17	6D0–44366–01	DAMPER, WATER SEAL 2 JOINT, TUBE D'EAU 2	1	1				
18	69J–45987–00	SPACER 1 ENTRETOISE 1	1	1				
19	688–45997–01	SPACER 2 ENTRETOISE 2	1	1				
20	92990–18200	WASHER RONDELLE, PLATE	1	1				
21	90171–18M04	NUT, CASTLE ECROU, CRENELE	1	1				
22	91490–40030	PIN. COTTER GOUPILLE	1	1				
23	6BR–45B70–00	PROPELLER (4X15"X21"-T) HELICE (4X15"X21"-T)	1	1				UR NORMAL 4 BLADE UR NORMAL 4 BLADE
	6BR–45B72–00	PROPELLER (4X15"X22"-T) HELICE (4X15"X22"-T)	1	1				UR NORMAL 4 BLADE UR NORMAL 4 BLADE
	6BR–45B74–00	PROPELLER (4X15"X23"-T) HELICE (4X15"X23"-T)	1	1				UR NORMAL 4 BLADE UR NORMAL 4 BLADE

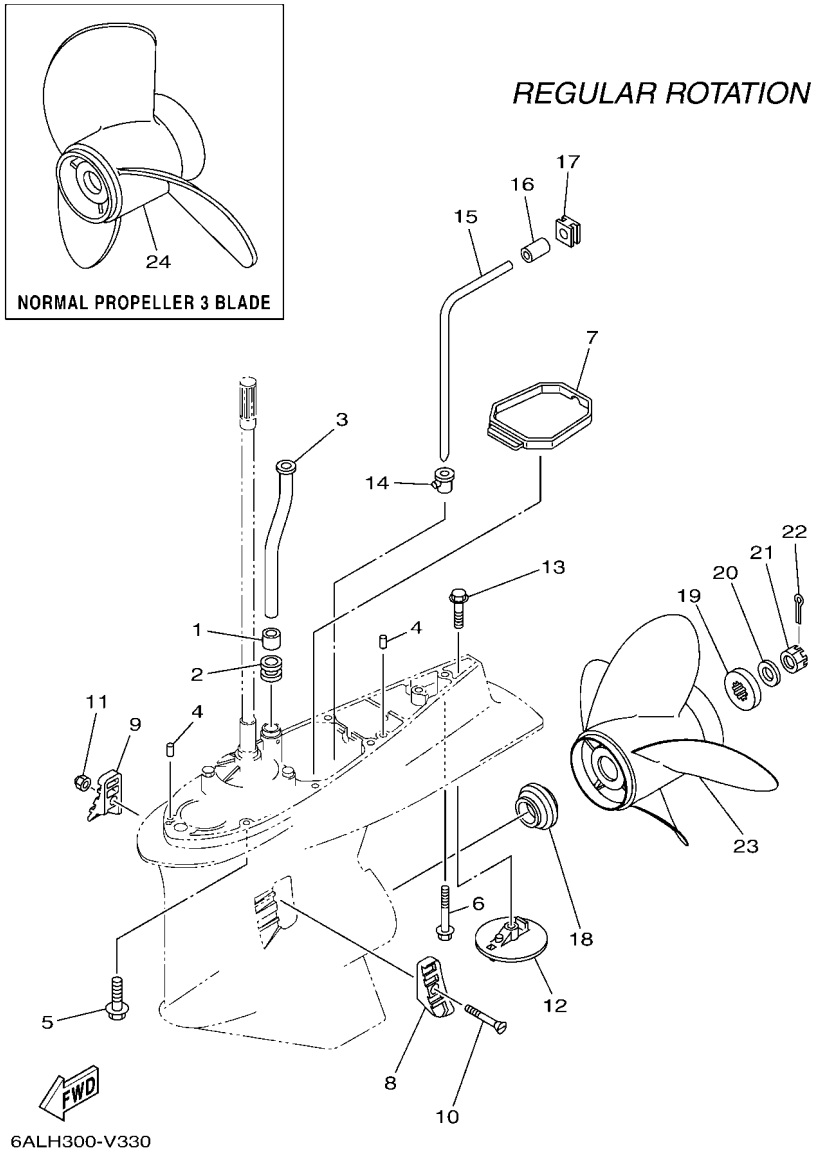

FIG. 33 LOWER CASING & DRIVE 2 — BOITIER D'HELICE TRANSMISSION2

REF. NO.	PART NO. N° PIECES	DESCRIPTION DESCRIPTION	6ALL	6ASK	6AML	6ATK		REMARKS REMARQUES
24	61A–45972–00	PROPELLER (3X14-1/2"X21"-T) HELICE (3X14-1/2"X21"-T)	1	1				NORMAL 3 BLADE NORMAL 3 BLADE

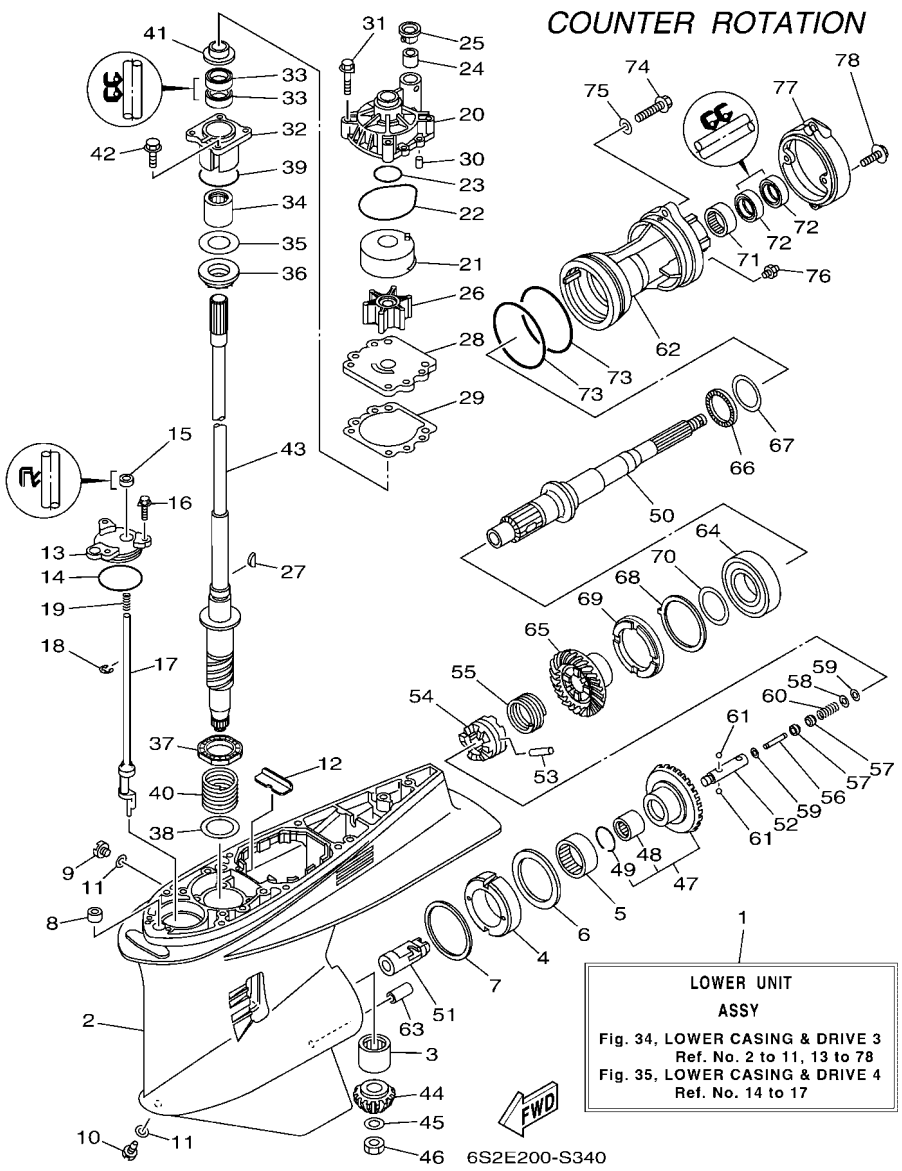

FIG. 34 LOWER CASING & DRIVE 3 — BOITIER D'HELICE TRANSMISSION3

REF. NO.	PART NO. N° PIECES	DESCRIPTION DESCRIPTION	6ALL	6ASK	6AML	6ATK		REMARKS REMARQUES
1	6AT–45300–00–8D	LOWER UNIT ASSY UNITE INFERIEURE (ENS.)			1	1		X(25.3"),LH X(25.3"),LH
2	6P2–45301–00–8D	CASING, LOWER BEQUILLE			1	1		
3	93311–83280	BEARING ROULEMENT			1	1		
4	61B–45538–01	SPACER 1 ENTRETOISE			1	1		
5	93315–660W3	BEARING ROULEMENT			1	1		
6	93341–670V0	BEARING CERVEAUX DE DIRECTION			1	1		
7	61A–45567–00	SHIM (T:0.10MM) CALE (T:0.10MM)			1	1		UR UR
	61A–45567–10	SHIM (T:0.12MM) CALE (T:0.12MM)			1	1		UR UR
	61A–45567–20	SHIM (T:0.15MM) CALE (T:0.15MM)			1	1		UR UR
	61A–45567–30	SHIM (T:0.18MM) CALE (T:0.18MM)			1	1		UR UR
	61A–45567–40	SHIM (T:0.30MM) CALE (T:0.30MM)			1	1		UR UR
	61A–45567–50	SHIM (T:0.40MM) CALE (T:0.40MM)			1	1		UR UR
	61A–45567–60	SHIM (T:0.50MM) CALE (T:0.50MM)			1	1		UR UR
8	663–44366–01	DAMPER, WATER SEAL 2 JOINT, TUBE D'EAU 2			1	1		
9	90340–08002	PLUG, STRAIGHT SCREW PLOT, FILETE DROIT			1	1		
10	688–45341–10	PLUG, DRAIN BOUCHON DE VIDANGE			1	1		
11	90430–08003	GASKET JOINT			2	2		
12	61A–45376–00	GUIDE, SEAL DAMPER BUTEE, JOINT CAOUTCHOUC			1	1		
13	61A–45321–01	PLATE PLAQUETTE			1	1		
14	93210–64488	O-RING JOINT TORIQUE			1	1		
15	93106–09014	OIL SEAL JOINT SPY			1	1		
16	90119–06286	BOLT, WITH WASHER BOULON, AVEC RONDELLE			3	3		
17	69K–44150–00	SHIFT CAM ASSY CAME D'INVERSION			1	1		
18	99001–08600	CIRCLIP CIRCLIP			1	1		
19	90501–11M10	SPRING, COMPRESSION RESSORT, COMPRESSION			1	1		
20	61A–44311–01	HOUSING, WATER PUMP CORPS, POMPE A EAU			1	1		
21	61A–44322–02	INSERT, CARTRIDGE CUVETTE			1	1		

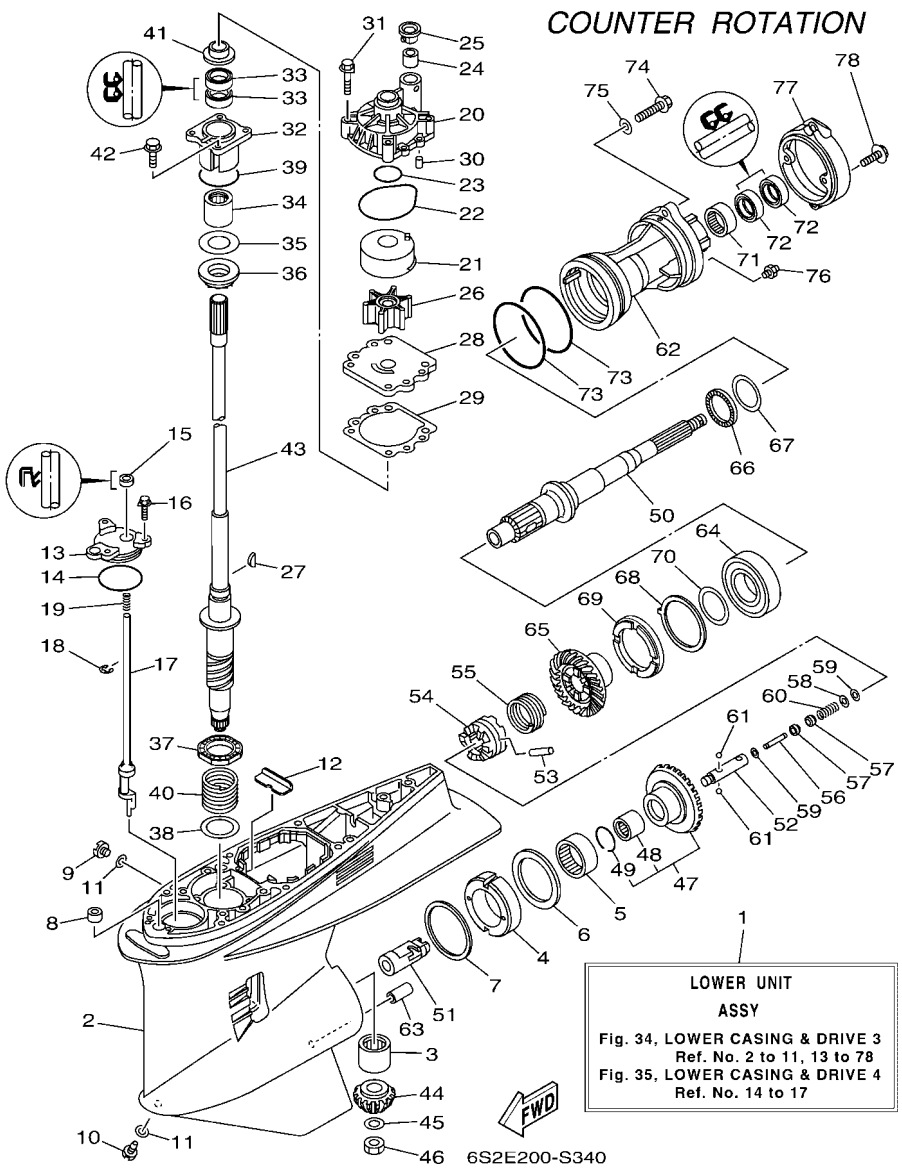

FIG. 34 LOWER CASING & DRIVE 3 — BOITIER D'HELICE TRANSMISSION3

REF. NO.	PART NO. N° PIECES	DESCRIPTION DESCRIPTION	6ALL	6ASK	6AML	6ATK		REMARKS REMARQUES
22	93210–86M38	O-RING JOINT TORIQUE			1	1		
23	93210–37160	O-RING JOINT TORIQUE			1	1		
24	6E5–44365–01	DAMPER, WATER SEAL 1 JOINT, TUBE D'EAU 1			1	1		
25	6E5–44312–00	COVER, WATER PUMP HOUSING COUVERCLE			1	1		
26	6E5–44352–01	IMPELLER TURBINE			1	1		
27	90280–04M05	KEY, WOODRUFF CLAVETTE, DEMI-LUNE			1	1		
28	6G5–44323–01	OUTER PLATE, CARTRIDGE PLAQUE EXTERIEURE			1	1		
29	6E5–44315–A0	GASKET, WATER PUMP JOINT, POMPE A EAU			1	1		
30	93606–12019	PIN, DOWEL GOUPILLE			2	2		
31	90119–08191	BOLT, WITH WASHER BOULON, AVEC RONDELLE			4	4		
32	61A–45331–00–9S	HOUSING, BEARING FLASQUE, ROULEMENT			1	1		
33	93101–28019	OIL SEAL JOINT SPY			2	2		
34	93317–330U2	BEARING ROULEMENT			1	1		
35	61A–45587–00	SHIM (T:0.10MM) CALE (T:0.10MM)			1	1		UR UR
	61A–45587–10	SHIM (T:0.12MM) CALE (T:0.12MM)			1	1		UR UR
	61A–45587–20	SHIM (T:0.15MM) CALE (T:0.15MM)			1	1		UR UR
	61A–45587–30	SHIM (T:0.18MM) CALE (T:0.18MM)			1	1		UR UR
	61A–45587–40	SHIM (T:0.30MM) CALE (T:0.30MM)			1	1		UR UR
	61A–45587–50	SHIM (T:0.40MM) CALE (T:0.40MM)			1	1		UR UR
	61A–45587–60	SHIM (T:0.50MM) CALE (T:0.50MM)			1	1		UR UR
36	93341–93020	BEARING CERVEAUX DE DIRECTION			1	1		
37	93341–34019	BEARING CERVEAUX DE DIRECTION			1	1		
38	90201–42014	WASHER, PLATE RONDELLE, PLATE			1	1		
39	93210–55M14	O-RING JOINT TORIQUE			1	1		
40	90501–450A2	SPRING, COMPRESSION RESSORT, COMPRESSION			1	1		
41	6E5–45344–00	COVER, OIL SEAL FLASQE, JOINT D'HUILE			1	1		
42	97E95–08525	BOLT, HEXAGON W/W DEEP RECESS VIS HEXAGONAL AVC RONDELLE			4	4		

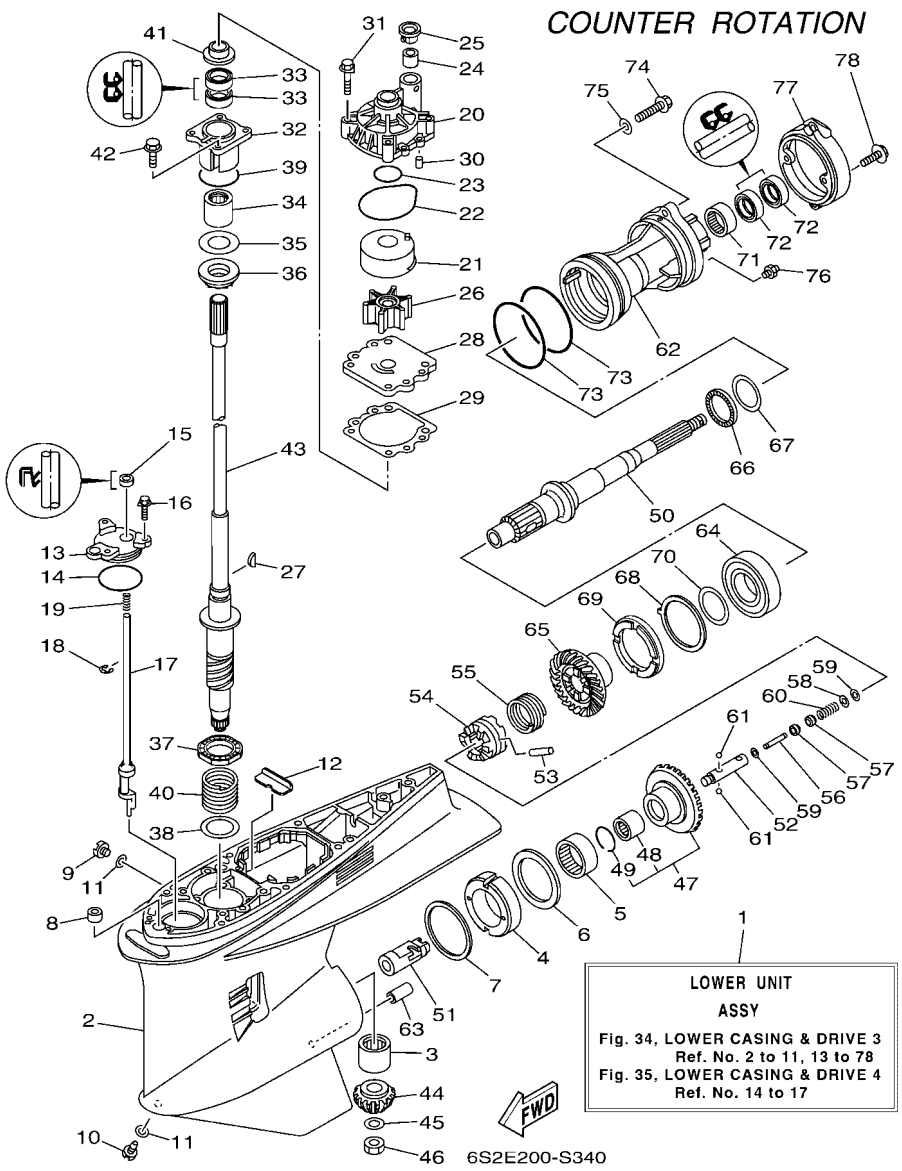

FIG. 34 LOWER CASING & DRIVE 3 — BOITIER D'HELICE TRANSMISSION3

REF. NO.	PART NO. N° PIECES	DESCRIPTION DESCRIPTION	6ALL	6ASK	6AML	6ATK		REMARKS REMARQUES
43	6P2–45501–01	DRIVE SHAFT COMP. ARBRE MOTEUR COMP.			1	1		X(25.3") X(25.3")
44	6FJ–45551–00	PINION (13T) PIGNON D'ATTAQUE (13D)			1	1		
45	90201–16M00	WASHER, PLATE RONDELLE, PLATE			1	1		
46	90170–16M19	NUT ECROU			1	1		
47	6FK–45560–00	GEAR 1 (26T) PIGNON 1 (26D)			1	1		
48	93317–62891	.BEARING .ROULEMENT			1	1		
49	93450–37097	.CIRCLIP .CIRCLIP			1	1		
50	69K–45611–01	SHAFT, PROPELLER ARBRE, HELICE			1	1		
51	61B–45641–01	SHIFTER EMBRAYAGE			1	1		
52	61A–45634–01	SLIDE, SHIFT CONTRE-POUSSOIR			1	1		
53	61A–45632–00	PIN, CROSS GOUPILLE DE CRABOT			1	1		
54	69J–45631–00	CLUTCH, DOG CRABOT			1	1		
55	61A–45633–00	RING, CROSS PIN JONC, GOUPILLE CRABOT			1	1		
56	6H1–45668–00	SHAFT, FREE 1 AXE 1			1	1		
57	61A–45635–00	PLUNGER, SHIFT POUSSOIR D'EMBRAYAGE			2	2		
58	90201–02M00	WASHER, PLATE RONDELLE, PLATE			1	1		
59	90183–02M03	NUT, SPRING ECROU, RESSORT			2	2		
60	90501–10M77	SPRING, COMPRESSION RESSORT, COMPRESSION			1	1		
61	93501–04011	BALL BILLE			2	2		
62	6DY–45332–00	HOUSING, BEARING FLASQUE, ROULEMENT			1	1		
63	99590–10114	PIN, DOWEL GOUJON, D'ASSEMBLAGE			1	1		
64	93332–00048	BEARING ROULEMENT			1	1		
65	6FK–45571–00	GEAR 2 (26T) PIGNON 2 (26D)			1	1		
66	93341–440U5	BEARING CERVEAUX DE DIRECTION			1	1		
67	6K1–45578–01	SHIM (T:0.10MM) CALE (T:0.10MM)			1	1		UR UR
	6K1–45578–10	SHIM (T:0.12MM) CALE (T:0.12MM)			1	1		UR UR
	6K1–45578–20	SHIM (T:0.15MM) CALE (T:0.15MM)			1	1		UR UR

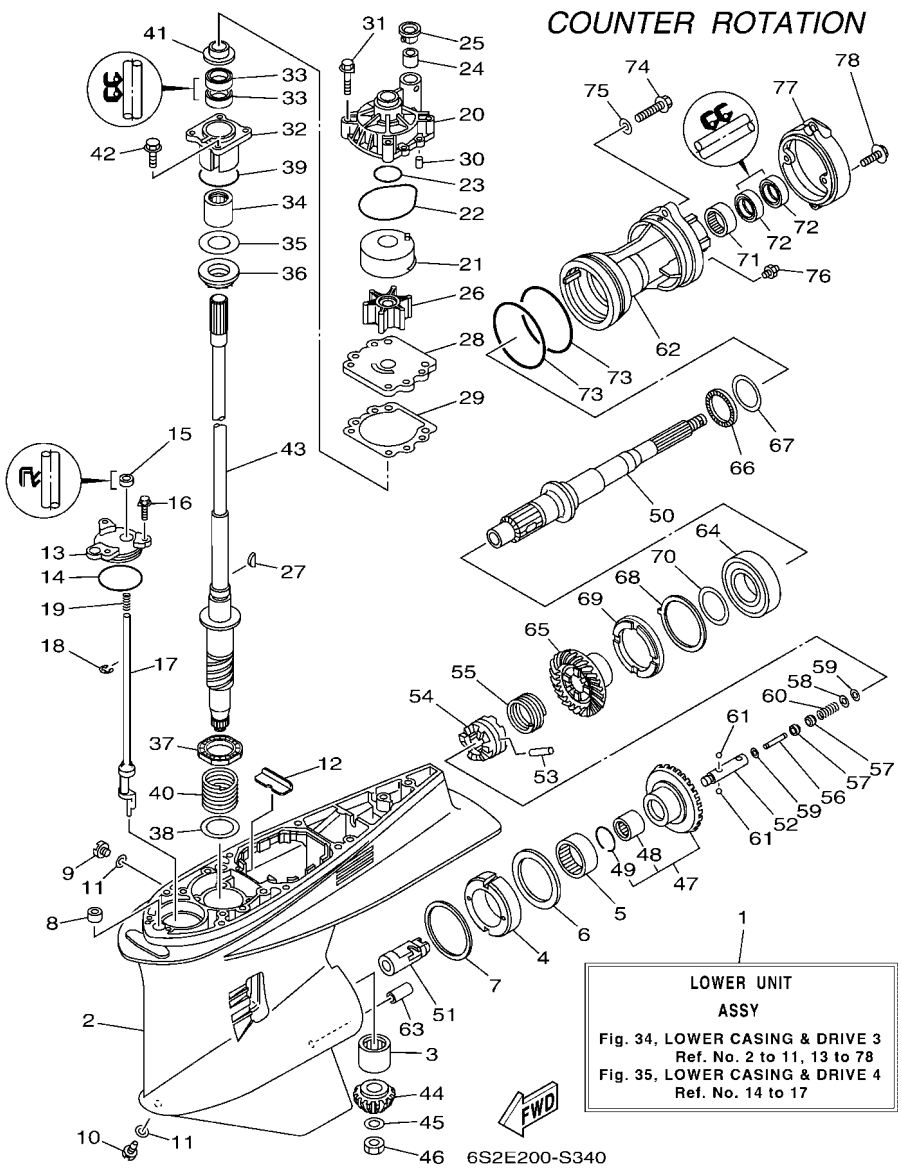

FIG. 34 LOWER CASING & DRIVE 3 — BOITIER D'HELICE TRANSMISSION3

REF. NO.	PART NO. N° PIECES	DESCRIPTION DESCRIPTION	6ALL	6ASK	6AML	6ATK		REMARKS REMARQUES
67	6K1–45578–30	SHIM (T:0.18MM) CALE (T:0.18MM)			1	1		UR UR
	6K1–45578–40	SHIM (T:0.30MM) CALE (T:0.30MM)			1	1		UR UR
	6K1–45578–50	SHIM (T:0.40MM) CALE (T:0.40MM)			1	1		UR UR
	6K1–45578–60	SHIM (T:0.50MM) CALE (T:0.50MM)			1	1		UR UR
68	61B–45383–00	WASHER, CLAW FREIN D'ECROU			1	1		
69	6DY–45384–00	NUT ECROU			1	1		
70	69K–45577–00	SHIM (T:0.10MM) CALE (T:0.10MM)			1	1		UR UR
	69K–45577–10	SHIM (T:0.12MM) CALE (T:0.12MM)			1	1		UR UR
	69K–45577–20	SHIM (T:0.15MM) CALE (T:0.15MM)			1	1		UR UR
	69K–45577–30	SHIM (T:0.18MM) CALE (T:0.18MM)			1	1		UR UR
	69K–45577–40	SHIM (T:0.30MM) CALE (T:0.30MM)			1	1		UR UR
	69K–45577–50	SHIM (T:0.40MM) CALE (T:0.40MM)			1	1		UR UR
	69K–45577–60	SHIM (T:0.50MM) CALE (T:0.50MM)			1	1		UR UR
71	93315–43064	BEARING ROULEMENT			1	1		
72	93101–30030	OIL SEAL JOINT SPY			2	2		
73	93211–04384	O-RING JOINT TORIQUE			2	2		
74	90105–08049	BOLT, FLANGE BOULON, A COLLERETTE			2	2		
75	90201–08023	WASHER, PLATE RONDELLE, PLATE			2	2		
76	93700–09M00	NIPPLE, GREASE PION			1	1		
77	6D0–45361–00–8D	CAP, LOWER CASING COUVERCLE, BOITIER D'HELICE			1	1		
78	97E95–08520	BOLT, HEXAGON W/W DEEP RECESS VIS HEXAGONAL AVC RONDELLE			2	2		

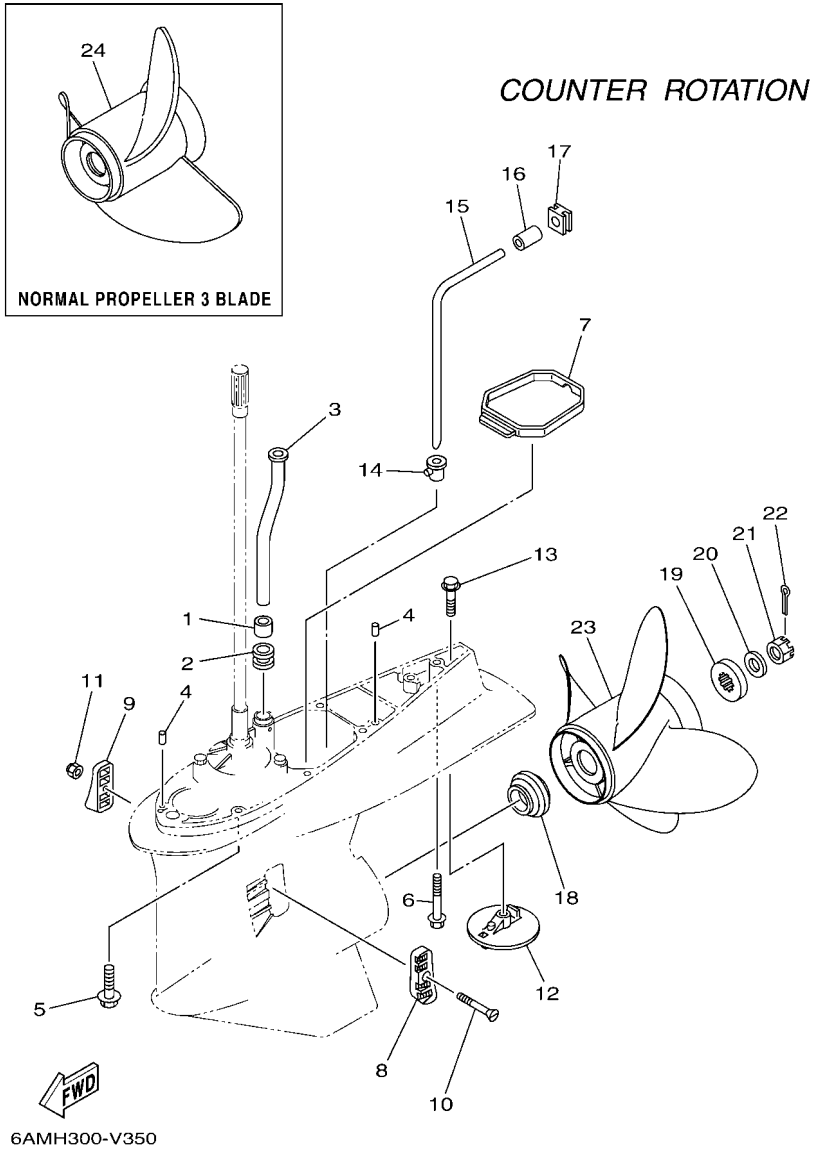

FIG. 35 LOWER CASING & DRIVE 4 — BOITIER D'HELICE TRANSMISSION4

REF. NO.	PART NO. N° PIECES	DESCRIPTION DESCRIPTION	6ALL	6ASK	6AML	6ATK		REMARKS REMARQUES
1	6E5–44365–01	DAMPER, WATER SEAL 1 JOINT, TUBE D'EAU 1			1	1		
2	6E5–44366–01	DAMPER, WATER SEAL 2 JOINT, TUBE D'EAU 2			1	1		
3	6S1–44361–02	TUBE, WATER 1 TUBE D'EAU 1			1	1		X(25.3") X(25.3")
4	93608–12M05	PIN, DOWEL AXE			2	2		
5	97E95–10645	BOLT, HEXAGON W/W DEEP RECESS VIS HEXAGONAL AVC RONDELLE			7	7		X(25.3") X(25.3")
6	90119–10072	BOLT, WITH WASHER BOULON, AVEC RONDELLE			1	1		X(25.3") X(25.3")
7	6D0–45375–01	DAMPER, SEAL BOURRELET, CAOUTCHOUC			1	1		
8	61A–45214–11	COVER, WATER INLET 1 GRILLE, ENTREE D'EAU 1			1	1		
9	61A–45215–11	COVER, WATER INLET 2 GRILLE, ENTREE D'EAU 2			1	1		
10	90152–05003	SCREW, COUNTERSUNK VIS, TETE NOYEE			1	1		
11	90185–05002	NUT, NYLON ECROU,AUTO-BLOQUANT			1	1		
12	6CE–45373–00	ANODE ANODE			1	1		
13	90105–10M00	BOLT, FLANGE BOULON, A COLLERETTE			1	1		
14	6D0–44367–00	DAMPER, WATER SEAL 3 JOINT TUBE D'EAU 3			1	1		
15	6D0–44362–01	TUBE, WATER 2 TUBE D'EAU 2			1	1		
16	6D0–44365–00	DAMPER, WATER SEAL 1 JOINT, TUBE D'EAU 1			1	1		
17	6D0–44366–01	DAMPER, WATER SEAL 2 JOINT, TUBE D'EAU 2			1	1		
18	69J–45987–00	SPACER 1 ENTRETOISE 1			1	1		
19	688–45997–01	SPACER 2 ENTRETOISE 2			1	1		
20	92990–18200	WASHER RONDELLE, PLATE			1	1		
21	90171–18M04	NUT, CASTLE ECROU, CRENELE			1	1		
22	91490–40030	PIN. COTTER GOUPILLE			1	1		
23	6BS–45B70–00	PROPELLER (4X15"X21"-TL) HELICE (4X15"X21"-TL)			1	1		UR NORMAL 4 BLADE UR NORMAL 4 BLADE
	6BS–45B72–00	PROPELLER (4X15"X22"-TL) HELICE (4X15"X22"-TL)			1	1		UR NORMAL 4 BLADE UR NORMAL 4 BLADE
	6BS–45B74–00	PROPELLER (4X15"X23"-TL) HELICE (4X15"X23"-TL)			1	1		UR NORMAL 4 BLADE UR NORMAL 4 BLADE
24	61B–45972–00	PROPELLER (3X14-1/2"X21"-TL) HELICE (3X14-1/2"X21"-TL)			1	1		NORMAL 3 BLADE NORMAL 3 BLADE

FIG. 36 STEERING GUIDE ATTACHMENT 1 — DIRECTION GUIDE ACCESSOIRE 1

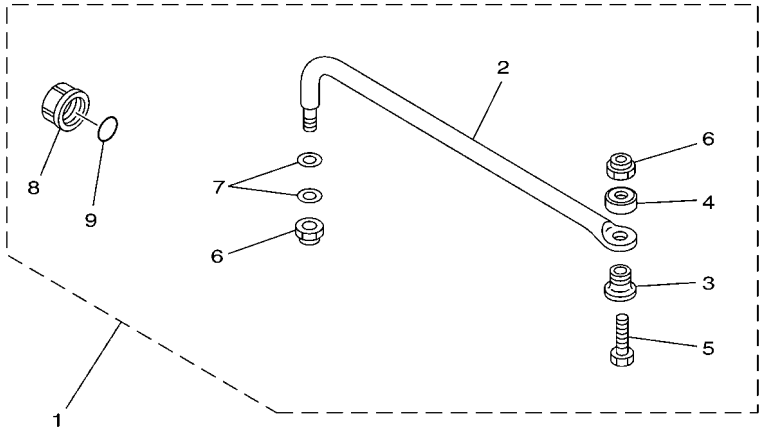

67H0100-9290

REF. NO.	PART NO. N° PIECES	DESCRIPTION DESCRIPTION	6ALL	6ASK	6AML	6ATK		REMARKS REMARQUES
1	6E5–61350–02	STEERING GUIDE ATTACHMENT KIT FIXATIONS DE DIRECTION	1	1				AP AP
2	6E5–61351–01	.ROD, STEERING LINK .RENVOI DE DIRECTION	1	1				
3	90387–10M61	.COLLAR .COLLERETTE	1	1				
4	90560–12M01	.SPACER .ENTRETOISE	1	1				
5	6E5–61355–00	.BOLT .BOULON	1	1				
6	90185–09M01	.NUT, SELF-LOCKING .ECROU,AUTO-BLOQUANT	2	2				
7	90201–10M20	.WASHER, PLATE .RONDELLE, PLATE	2	2				
8	6E5–43145–01	.CAP, CLAMP BRACKET .CAPUCHON, PRESSE	1	1				
9	93210–16275	.O-RING .JOINT TORIQUE	1	1				

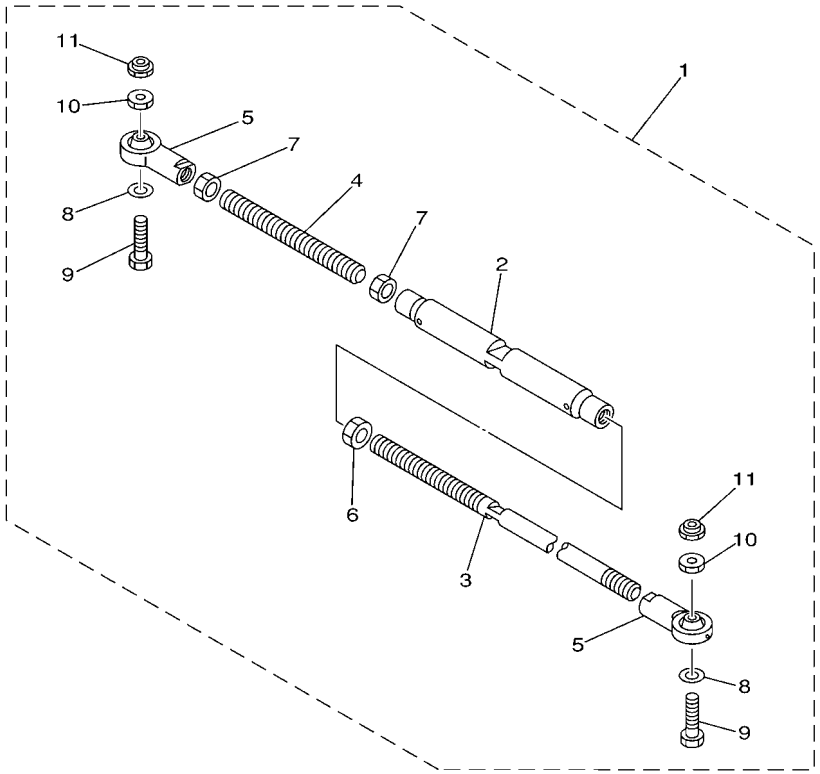

67H0100-0300

FIG. 37 STEERING GUIDE ATTACHMENT 2 — DIRECTION GUIDE ACCESSOIRE 2

REF. NO.	PART NO. N° PIECES	DESCRIPTION DESCRIPTION	6ALL	6ASK	6AML	6ATK		REMARKS REMARQUES
1	6E5–61310–00	TIE BAR ASSY (L:600-800MM) ASSEMBLAGE DU TIRANT (L:600-80			1	1		AP AP
2	6E5–61313–00	.ADJUSTER .TENDEUR			1	1		
3	6E5–61311–11	.TIE BAR .BARRE D'ACCOUPLEMENT			1	1		
4	6E5–61315–00	.TIE BAR .BARRE D'ACCOUPLEMENT			1	1		
5	6E5–61303–01	.STEERING AXLE COMP. .AXLE COMP.			2	2		
6	90170–14M06	.NUT .ECROU			1	1		
7	95380–14700	.NUT .ECROU			2	2		
8	90201–10M76	.WASHER, PLATE .RONDELLE, PLATE			2	2		
9	90101–09M70	.BOLT .BOULON			2	2		
10	90170–09M05	.NUT .ECROU			2	2		
11	90185–09M01	.NUT, SELF-LOCKING .ECROU,AUTO-BLOQUANT			2	2		

FIG. 38 REMOTE CONTROL BOX — BOITIER DE COMMANDE A DISTANCE

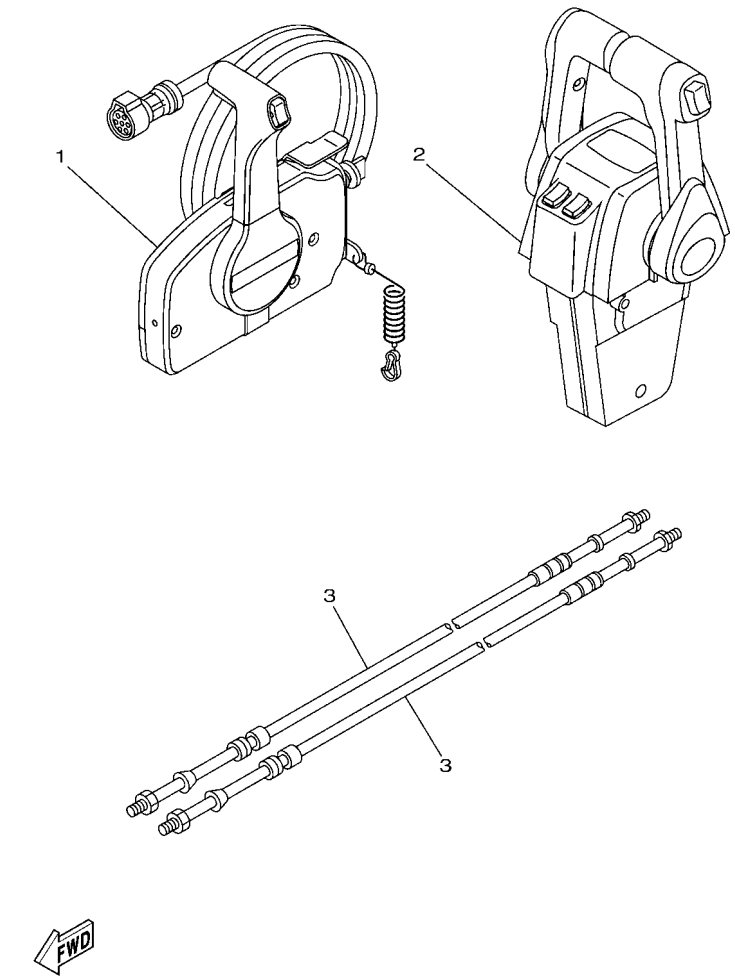

6DA5370-R390

REF. NO.	PART NO. N° PIECES	DESCRIPTION DESCRIPTION	6ALL	6ASK	6AML	6ATK		REMARKS REMARQUES
1	703–48207–25	REMOTE CONTROL ASSY (10P, PTT) BOITIER DE COMMANDE A DISTANCE	1					AP FOR RUS WITH PT/T SW. AP FOR RUS WITH PT/T SW.
2	704–48207–R2	REMOTE CONTROL ASSY BOITIER DE COMMANDE A DISTANCE			1			AP FOR RUS WITH PT/T SW. AP FOR RUS WITH PT/T SW.
3	701–48320–50	CABLE, REMOTE CONTROL L=15F CABLE, COMMANDE A DISTANCE:15F	2		2			UR UR
	701–48320–60	CABLE, REMOTE CONTROL L=16F CABLE, COMMANDE A DISTANCE:16F	2		2			UR UR
	701–48320–80	CABLE, REMOTE CONTROL L=17F CABLE, COMMANDE A DISTANCE:17F	2		2			UR UR
	701–48350–00	CABLE, REMOTE CONTROL L=21F CABLE, COMMANDE A DISTANCE:21F	2		2			UR UR
	701–48350–20	CABLE, REMOTE CONTROL L=23F CABLE, COMMANDE A DISTANCE:23F	2		2			UR UR

FIG. 39 REMOTE CONTROL ASSY 1 — BOITIER DE COMMANDE A DISTANCE

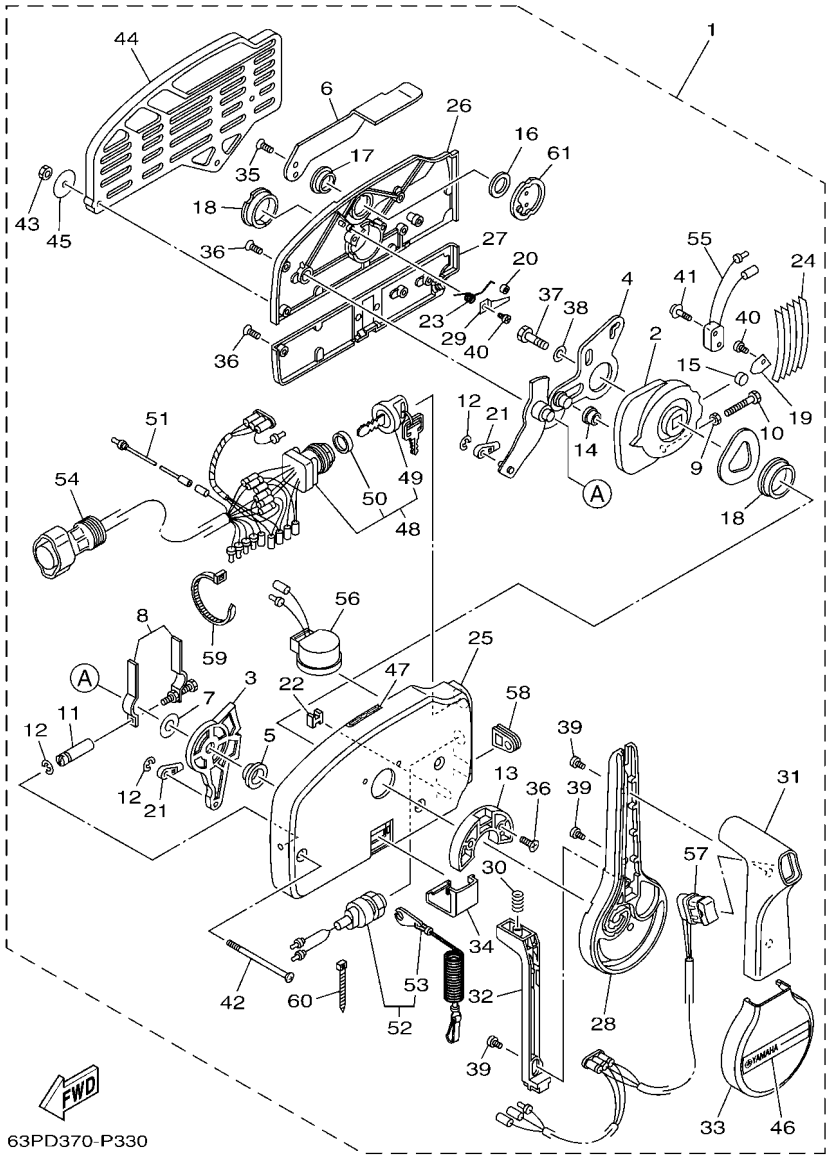

REF. NO.	PART NO. N° PIECES	DESCRIPTION DESCRIPTION	6ALL	6ASK	6AML	6ATK		REMARKS REMARQUES
1	703–48207–25	REMOTE CONTROL ASSY (10P, PTT) BOITIER DE COMMANDE A DISTANCE	1					AP FOR RUS WITH PT/T SW. AP FOR RUS WITH PT/T SW.
2	703–48232–00	.GEAR .PIGNON	1					
3	703–48271–00	.ARM, SHIFT .BRAS	1					
4	703–48261–01	.ARM, THROTTLE .BRAS, ACCELERATION	1					
5	703–48235–00	.BUSHING .COUSSINET	1					
6	703–48152–10	.KNOB, FREE ACCEL. .BOUTON	1					
7	703–48268–00	.SPACER .ENTRETOISE	1					
8	703–48264–00	.FRICTION, THROTTLE .FRICTION, ACCELERATION	1					
9	95380–05600	.NUT .ECROU	1					
10	97380–05025	.BOLT .BOULON, HEXAGONAL	1					
11	703–48265–10	.SHAFT, FRICTION .AXE, COPILOTE	1					
12	93430–06024	.CIRCLIP .CLIPS	3					
13	703–48245–00	.PLATE, LOCK .PLAQUE, VERROU	1					
14	703–48252–00	.ROLLER, CAM .POULIE	1					
15	701–48248–00	.ROLLER, FREE ACCEL. .POULIE	1					
16	703–48198–00	.WASHER, WAVE .RONDELLE, ELASTIQUE ONDULEE	1					
17	703–48243–00	.BUSHING .COUSSINET	1					
18	703–48236–00	.BUSHING 1 .POULIE	2					
19	703–48189–00	.RETAINER .FLASQUE	1					
20	703–48234–00	.ROLLER, DETENT .POULIE	1					
21	703–48345–01	.CABLE END, REMOTE CONTROL 2 .CHAPE CABLE	2					
22	703–48358–01	.ANCHOR, CABLE .COLLIER	1					
23	703–48244–00	.SPRING, FREE ACCEL. .RESSORT	1					
24	703–48238–00	.SPRING, DETENT .RESSORT	5					
25	703–48211–10	.HOUSING,1 .CORPS	1					
26	703–48212–10	.BACK PLATE 1 .PLAQUETTE 1	1					
27	703–48213–10	.BACK PLATE 2 .PLAQUETTE 2	1					

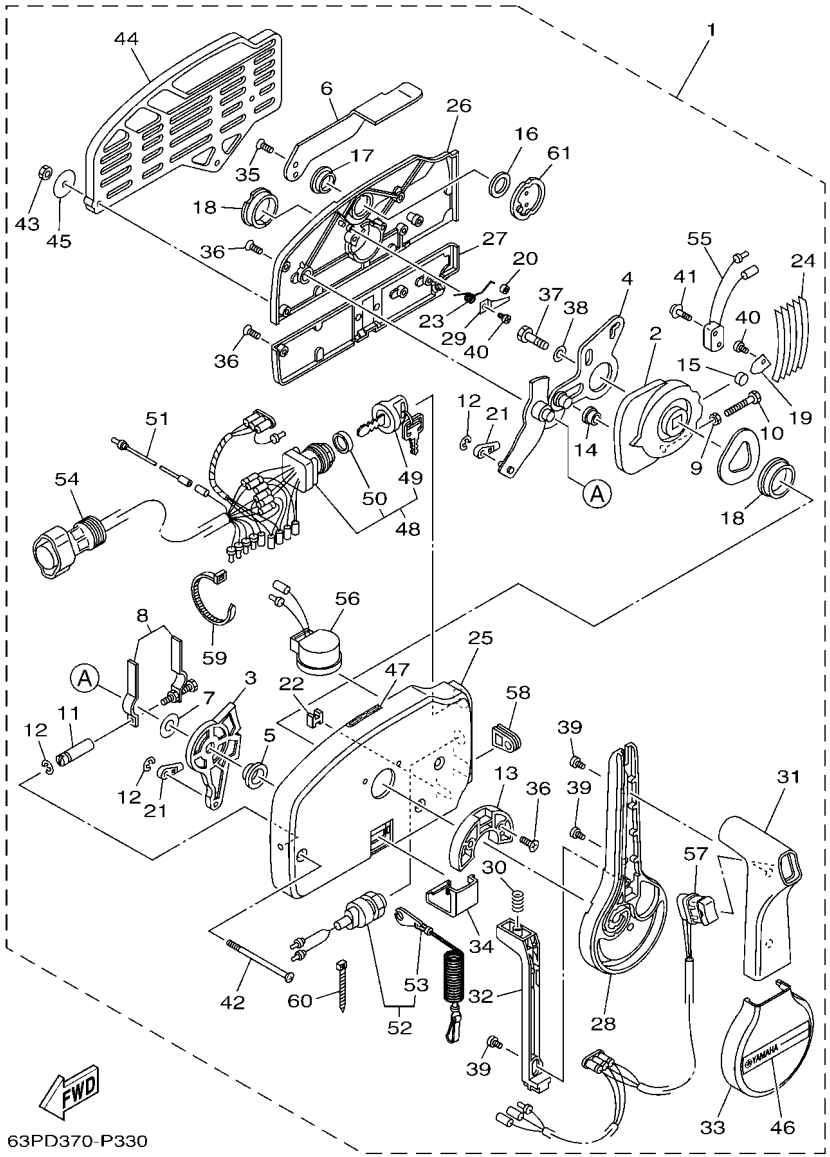

FIG. 39 REMOTE CONTROL ASSY 1 — BOITIER DE COMMANDE A DISTANCE

REF. NO.	PART NO. N° PIECES	DESCRIPTION DESCRIPTION	6ALL	6ASK	6AML	6ATK		REMARKS REMARQUES
28	703–48221–10	.LEVER, CONTROL .LEVIER, COMMANDE	1					
29	703–48246–00	.SPACER .ENTRETOISE	1					
30	703–48227–00	.SPRING, NEUTRAL LOCK .RESSORT	1					
31	703–48222–20	.GRIP, CONTROL LEVER .POIGNEE, COMMANDE LEVIER	1					SINGLE SINGLE
32	703–48223–10	.LOCK, NEUTRAL .VERROU, NEUTRAL	1					
33	703–48225–10	.COVER .COUVERCLE	1					
34	703–48219–10	.COVER, LEAD .COUVERCLE	1					
35	703–48281–00	.SCREW .VIS	2					
36	703–44189–20	.SCREW .VIS	7					
37	97380–08030	.BOLT .BOULON, HEXAGONAL	1					
38	92990–08600	.WASHER, PLATE .RONDELLE, PLATE	1					
39	703–48128–10	.SCREW 2 .VIS 2	3					
40	98580–04006	.SCREW, PAN HEAD .VIS	2					
41	703–48129–00	.SCREW 3 .VIS 3	2					
42	703–44189–30	.SCREW .VIS	3					
43	95380–06600	.NUT, HEXAGON .ECROU	3					
44	703–48293–11	.SPACER, REMOTE CONTROL .ENTRETOISE	1					SINGLE SINGLE
45	701–48287–00	.WASHER .RONDELLE	3					
46	703–48215–11	.GRAPHIC .ADHESIF	1					
47	6X3–44191–00	.INDICATOR, SHIFT .ETIQUETTE, EMBRAYAGE	1					
48	703–82510–45	.MAIN SWITCH ASSY .CONTACTEUR A CLEF COMPLET	1					
49	703–82577–00	..CAP, KEY ..CABOCHON	1					
50	6K1–82532–00	..CAP ..COUVERCLE	1					
51	703–82531–00	.WIRE, LEAD (L70) .FIL (L70)	1					
52	688–82575–02	.ENGINE STOP SWITCH ASSY .COUPE CIRCUIT CPLT	1					
53	682–82556–00	..LANYARD, STOP SWITCH ..CORDON DU COUPE CIRCUIT	1					
54	688–8258A–20	.EXTENSION, WIRE HARNESS (4.9M) .EXTENSION, FAISCEAU DE FILS (4	1					(10P) (10P)

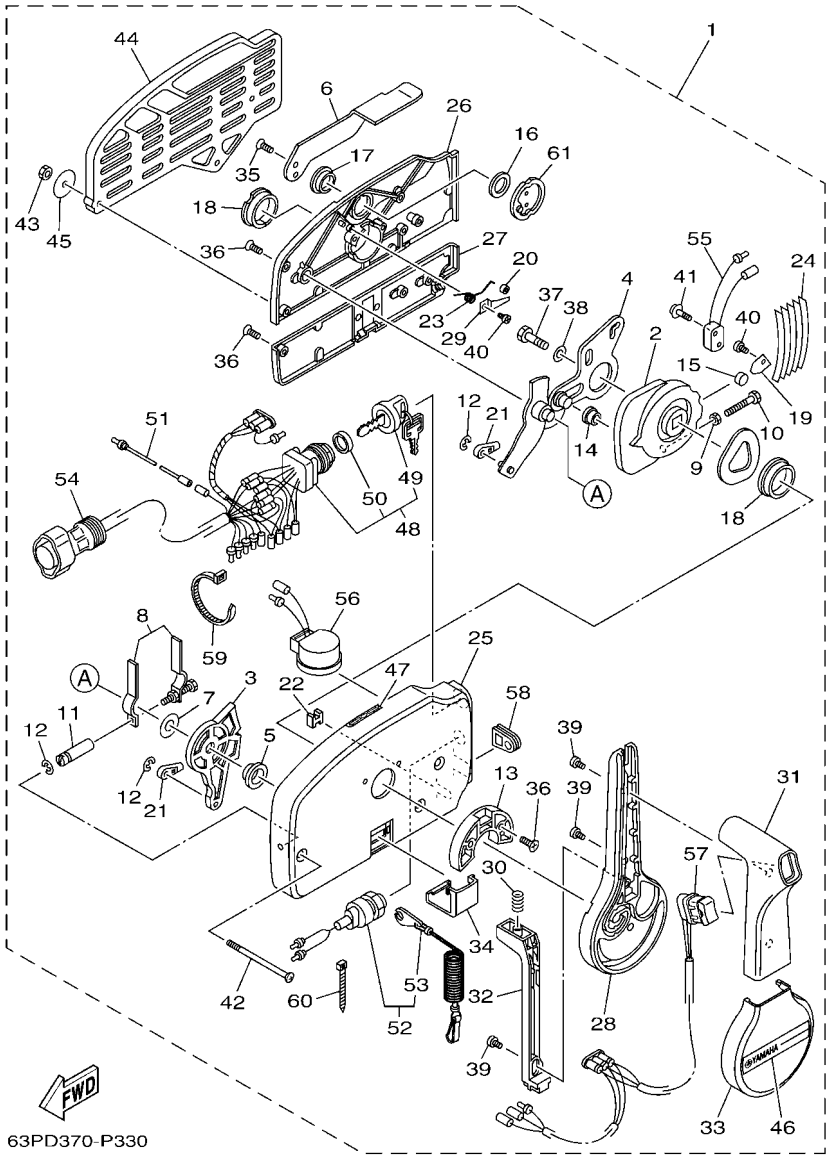

FIG. 39 REMOTE CONTROL ASSY 1 — BOITIER DE COMMANDE A DISTANCE

REF. NO.	PART NO. N° PIECES	DESCRIPTION DESCRIPTION	6ALL	6ASK	6AML	6ATK		REMARKS REMARQUES
55	703–82540–00	.NEUTRAL SWITCH ASSY .CONTACTEUR DE POINT-MORT	1					
56	703–83383–11	.BUZZER .RONFLEUR	1					
57	703–82563–21	.TRIM & TILT SWITCH ASSY .INCLINER ET PARER COMMUTATEUR	1					
58	703–48284–10	.GROMMET .PASSE-FIL	1					
59	703–82591–00	.BAND .COLLIER	1					
60	703–82592–00	.BAND .COLLIER	1					
61	703–48153–00	.SHAFT, FREE ACCEL. .AXE	1					

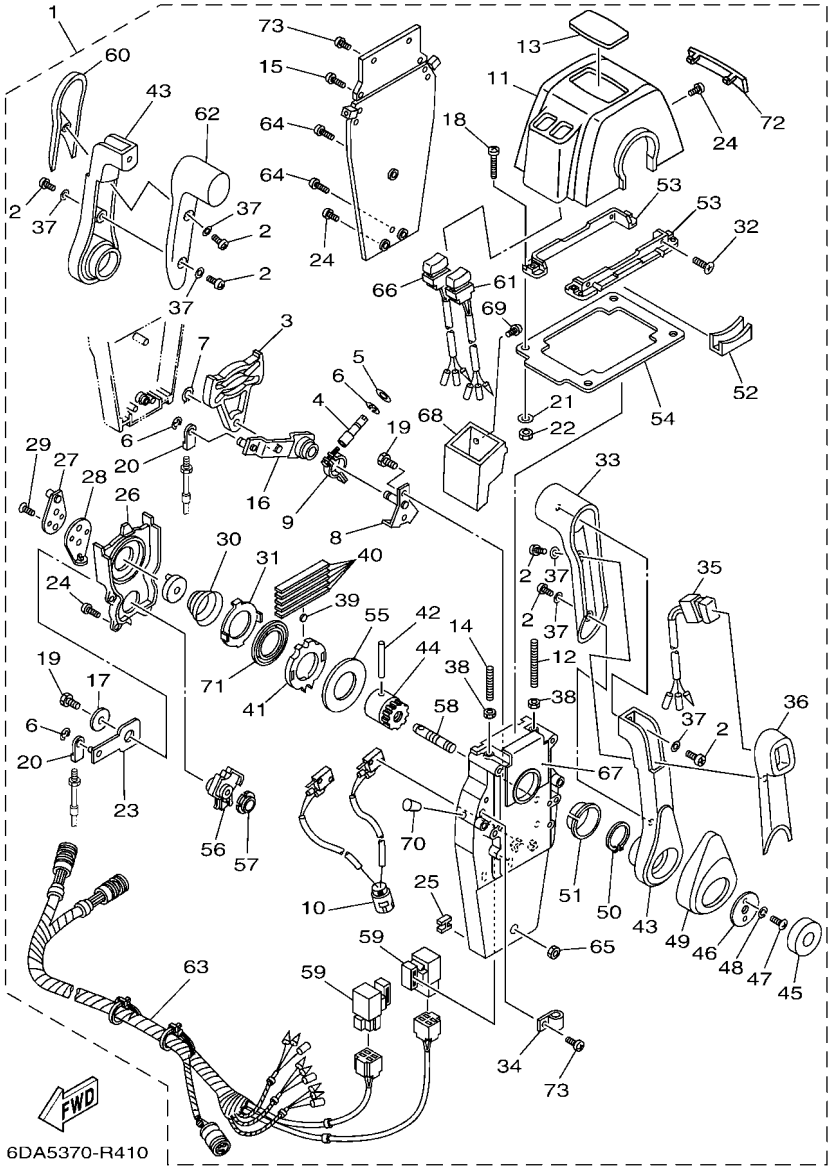

FIG. 40 REMOTE CONTROL ASSY 2 — BOITIER DE COMMANDE A DISTANCE

REF. NO.	PART NO. N° PIECES	DESCRIPTION DESCRIPTION	6ALL	6ASK	6AML	6ATK		REMARKS REMARQUES
1	704–48207–R2	REMOTE CONTROL ASSY BOITIER DE COMMANDE A DISTANCE			1			AP FOR RUS WITH PT/T SW. AP FOR RUS WITH PT/T SW.
2	704–48129–11	.SCREW 3 .VIS 3			6			
3	EL8–48251–00	.PLATE, CAM .PLAQUE, CAME			2			
4	704–48265–00	.SHAFT, FRICTION .AXE, COPILOTE			2			
5	701–48246–00	.SPACER .ENTRETOISE			2			
6	93430–06024	.CIRCLIP .CLIPS			8			
7	EL8–48259–00	.CIRCLIP 1 .CIRCLIP			2			
8	704–48262–00	.SHAFT, THROTTLE .AXE, ACCELERATION			2			
9	704–48264–00	.THROTTLE, FRICTION .FRICTION, ACCELERATION			2			
10	704–82540–30	.NEUTRAL SWITCH ASSY .CONTACTEUR DE POINT-MORT			1			
11	704–48119–60	.COVER .COQUILLE			1			
12	EL8–48281–00	.SCREW .VIS			2			
13	704–48215–70	.GRAPHIC .ADHESIF			1			
14	704–48281–00	.SCREW .VIS			2			
15	97890–05025	.SCREW, PAN HEAD .VIS, CRUCIFORME			4			
16	704–48261–00	.ARM, THROTTLE .BRAS, ACCELERATION			2			
17	EL8–48191–00	.WASHER 1 .RONDELLE			2			
18	704–48283–00	.SCREW .VIS			4			
19	97380–06018	.BOLT .BOULON, HEXAGONAL			6			
20	703–48345–01	.CABLE END, REMOTE CONTROL 2 .CHAPE CABLE			4			
21	704–48287–00	.WASHER .RONDELLE			4			
22	95380–05600	.NUT .ECROU			4			
23	704–48271–00	.ARM, SHIFT .BRAS			2			
24	EL8–48127–00	.SCREW 1 .VIS 1			18			
25	703–48358–01	.ANCHOR, CABLE .COLLIER			2			
26	704–48231–00	.HOUSING, GEAR .CARTER, ENGRENAGE			2			
27	EL8–48241–00	.ARM, DRIVE .BRAS, COMMANDE			2			

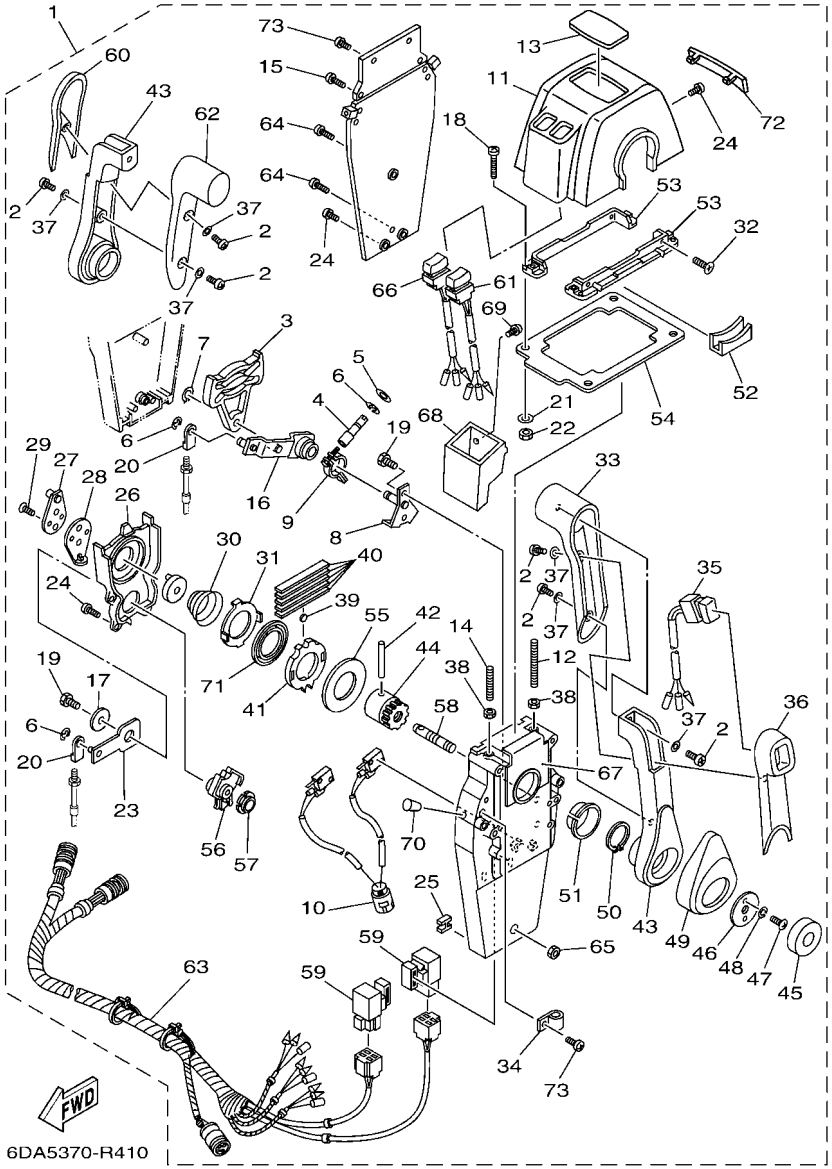

FIG. 40 REMOTE CONTROL ASSY 2 — BOITIER DE COMMANDE A DISTANCE

REF. NO.	PART NO. N° PIECES	DESCRIPTION DESCRIPTION	6ALL	6ASK	6AML	6ATK		REMARKS REMARQUES
28	EL8–48254–00	.STOPPER, THROTTLE ADJUSTING .BUTEE			2			
29	92780–06020	.SCREW, FLAT HEAD .VIS A TETE FRAISEE			4			
30	EL8–48244–00	.SPRING, FREE ACCEL. .RESSORT			2			
31	EL8–48245–00	.PLATE, LOCK .PLAQUE, VERROU			2			
32	98780–05018	.SCREW, FLAT HEAD .VIS A TETE FRAISEE			4			
33	704–48222–30	.GRIP, CONTROL LEVER .POIGNEE, COMMANDE LEVIER			2			
34	704–82594–00	.CLAMP .BRIDE			1			
35	704–82563–70	.TRIM & TILT SWITCH ASSY .INCLINER ET PARER COMMUTATEUR			1			
36	704–48229–30	.GRIP, CONTROL LEVER .POIGNEE, COMMANDE LEVIER			1			
37	92990–05300	.WASHER, INTERNAL TOOTH .RONDELLE, DENTURE INTERNE			6			
38	95380–06600	.NUT, HEXAGON .ECROU			4			
39	701–48248–00	.ROLLER, FREE ACCEL. .POULIE			2			
40	704–48238–00	.SPRING, DETENT .RESSORT			10			
41	704–48232–P1	.GEAR .PIGNON			2			
42	EL8–48164–00	.PIN 2 .PION 2			2			
43	704–48221–R0	.LEVER, CONTROL .LEVIER, COMMANDE			2			
44	704–48242–10	.SHAFT, DRIVE .ARBRE, MOTEUR			2			
45	704–48225–R0	.COVER .COUVERCLE			2			
46	704–48192–00	.WASHER 2 .RONDELLE 2			2			
47	97890–06018	.SCREW, PAN HEAD .VIS, CRUCIFORME			4			
48	92990–06300	.WASHER, INTERNAL TOOTH .RONDELLE, DENTURE INTERNE			4			
49	704–48224–R0	.COVER, CONTROL LEVER .COUVERCLE			2			
50	EL8–48279–00	.CIRCLIP 2 .CIRCLIP 2			2			
51	704–48234–00	.BUSHING 1 .POULIE			2			
52	704–48219–R0	.COVER, LEAD .COUVERCLE			2			
53	704–48144–20	.PLATE, STOPPER 2 .PLAQUETTE 2			2			
54	704–48176–10	.GROMMET .PASSE-FIL			1			

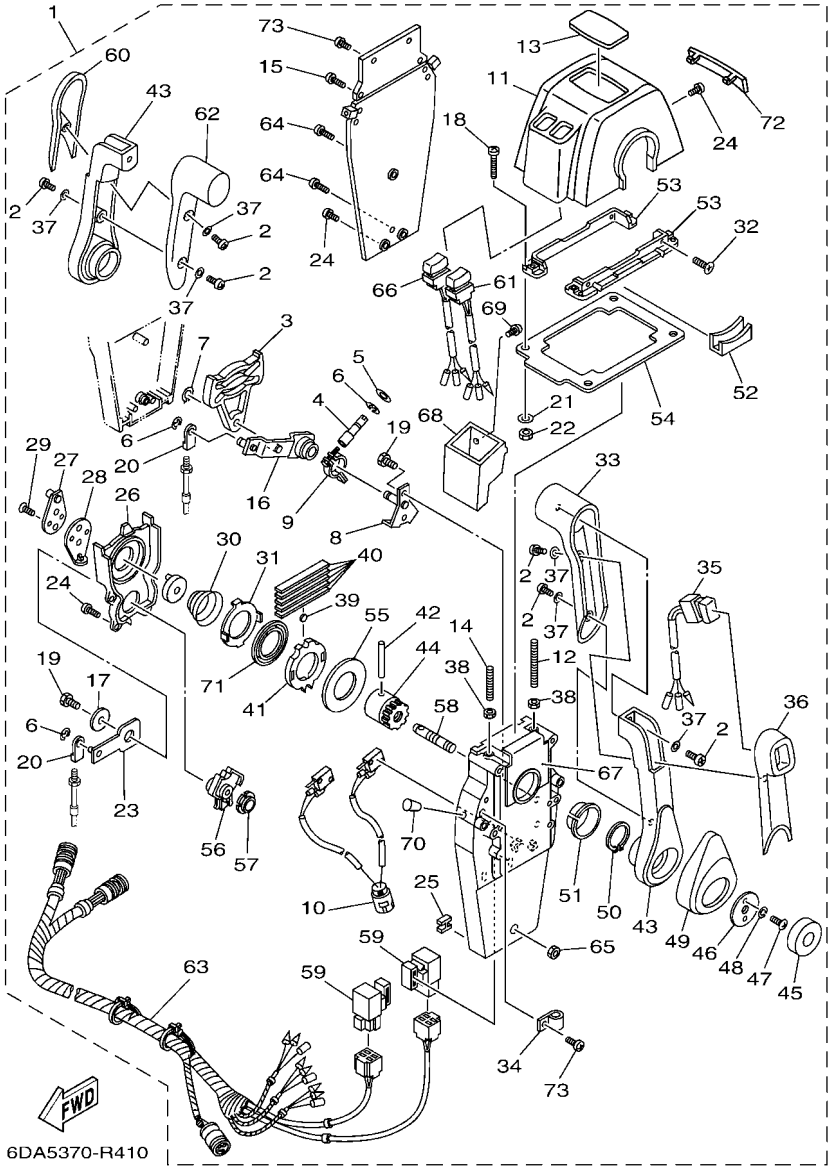

FIG. 40 REMOTE CONTROL ASSY 2 — BOITIER DE COMMANDE A DISTANCE

REF. NO.	PART NO. N° PIECES	DESCRIPTION DESCRIPTION	6ALL	6ASK	6AML	6ATK		REMARKS REMARQUES
55	704–48192–P0	.WASHER 2 .RONDELLE 2			2			
56	704–48233–00	.GEAR 2 .PIGNON 2			2			
57	704–48235–00	.BUSHING .COUSSINET			2			
58	704–48153–00	.SHAFT, FREE ACCEL. .AXE			2			
59	704–81950–11	.RELAY ASSY .RELAIS COMPLET			2			
60	704–48229–20	.GRIP, CONTROL LEVER .POIGNEE, COMMANDE LEVIER			1			
61	704–82563–80	.TRIM & TILT SWITCH ASSY .INCLINER ET PARER COMMUTATEUR			1			
62	704–48222–20	.GRIP, CONTROL LEVER .POIGNEE, COMMANDE LEVIER			1			
63	704–82590–10	.WIRE HARNESS ASSY .FAISCEAU DE FILS COMPLET			1			
64	704–48128–00	.SCREW 2 .VIS 2			3			
65	704–48156–00	.NUT 1 .ECROU 1			1			
66	704–82563–90	.TRIM & TILT SWITCH ASSY .INCLINER ET PARER COMMUTATEUR			1			
67	704–48284–P0	.GROMMET .PASSE-FIL			2			
68	704–48285–20	.GROMMET 2 .PASSE-FIL 2			1			
69	704–48129–60	.SCREW 3 .VIS 3			2			
70	704–48166–00	.PLUG .BOUCHON			2			
71	704–48178–00	.PLATE, SHIFT .PLAQUETTE			2			
72	704–48167–30	.PLUG .BOUCHON			1			
73	97890–05016	.SCREW, PAN HEAD .VIS, CRUCIFORME			5			

FIG. 41 OPTIONAL PARTS 1 — PIECES OPTIONNELLES 1

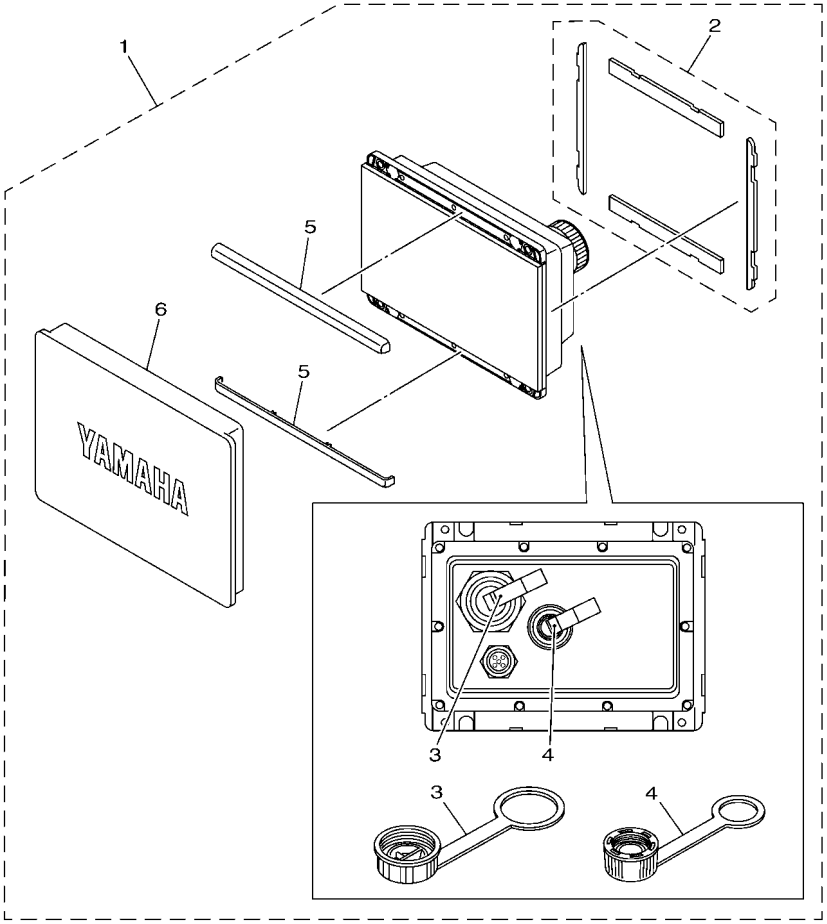

6ALH300-V410

REF. NO.	PART NO. N° PIECES	DESCRIPTION DESCRIPTION	6ALL	6ASK	6AML	6ATK		REMARKS REMARQUES
1	6YM–83710–17	CL5 DISPLAY (W/O WIFI) CL5 AFFICHAGE (W/O WIFI)	1					FOR RUS WITHOUT Wi-Fi FOR RUS WITHOUT Wi-Fi
2	6YM–22480–00	.SEAL ASSY .JEU DE JOINT	1					
3	6YM–83956–00	.CAP 1 .COUVERCLE	1					
4	6YD–83957–00	.CAP 2 .COUVERCLE	1					
5	6YM–83512–00	.RIM .JANTE	2					
6	6YM–87278–00	.COVER, METER .COUVERCLE, COMPTEUR	1					

FIG. 42 OPTIONAL PARTS 2 — PIECES OPTIONNELLES 2

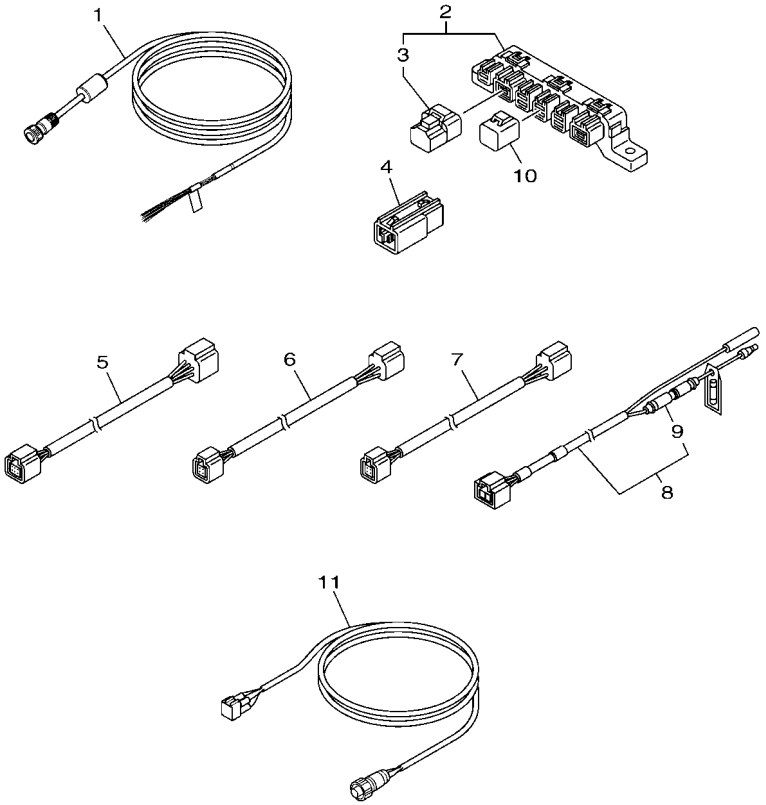

6ALH300-V420

REF. NO.	PART NO. N° PIECES	DESCRIPTION DESCRIPTION	6ALL	6ASK	6AML	6ATK		REMARKS REMARQUES
1	6YD–8356N–00	WIRE, LEAD FIL	1					FOR RUS FOR RUS
2	6Y8–81920–01	MULTI HUB ASSY BORNE	1					FOR RUS FOR RUS
3	6Y8–85371–01	.END OF LINE RESISTOR .RESISTANCE DE FIN DE LIGNE	1					
4	6Y8–81920–11	IN-LINE HUB ASSY BORNE	1					FOR RUS FOR RUS
5	6Y8–82553–31	25FT MAIN BUS EXTENSION, FAISCEAU	1					FOR RUS FOR RUS
6	6Y8–82521–11	2FT PIGTAIL BUS FAISCEAU (L: 2FT.)	1					FOR RUS FOR RUS
7	6Y8–82521–51	12FT PIGTAIL BUS FAISCEAU (L: 12FT.)	1					FOR RUS FOR RUS
8	6Y8–83553–02	8FT POWER WIRE FIL	1					FOR RUS FOR RUS
9	6G1–82151–01	.FUSE (10A) .FUSIBLE (10A)	1					
10	6Y8–82582–11	CAP 1 (4PIN) COUVERCLE 1 (4P)	2					FOR RUS FOR RUS
11	6YM–83553–00	CONVERSION HARNESS FIL	1					FOR RUS FOR RUS

FIG. 43 OPTIONAL PARTS 3 — PIECES OPTIONNELLES 3

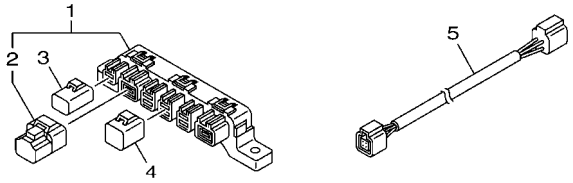

6ALH300-V430

REF. NO.	PART NO. N° PIECES	DESCRIPTION DESCRIPTION	6ALL	6ASK	6AML	6ATK		REMARKS REMARQUES
1	6Y8–81920–01	MULTI HUB ASSY BORNE			1			FOR RUS FOR RUS
2	6Y8–85371–01	.END OF LINE RESISTOR .RESISTANCE DE FIN DE LIGNE			1			
3	6Y8–82582–01	CAP 1 (2PIN) COUVERCLE 1			1			FOR RUS FOR RUS
4	6Y8–82582–11	CAP 1 (4PIN) COUVERCLE 1 (4P)			3			FOR RUS FOR RUS
5	6Y8–82521–51	12FT PIGTAIL BUS FAISCEAU (L: 12FT.)			1			FOR RUS FOR RUS

FIG. 44 OPTIONAL PARTS 4 — PIECES OPTIONNELLES 4

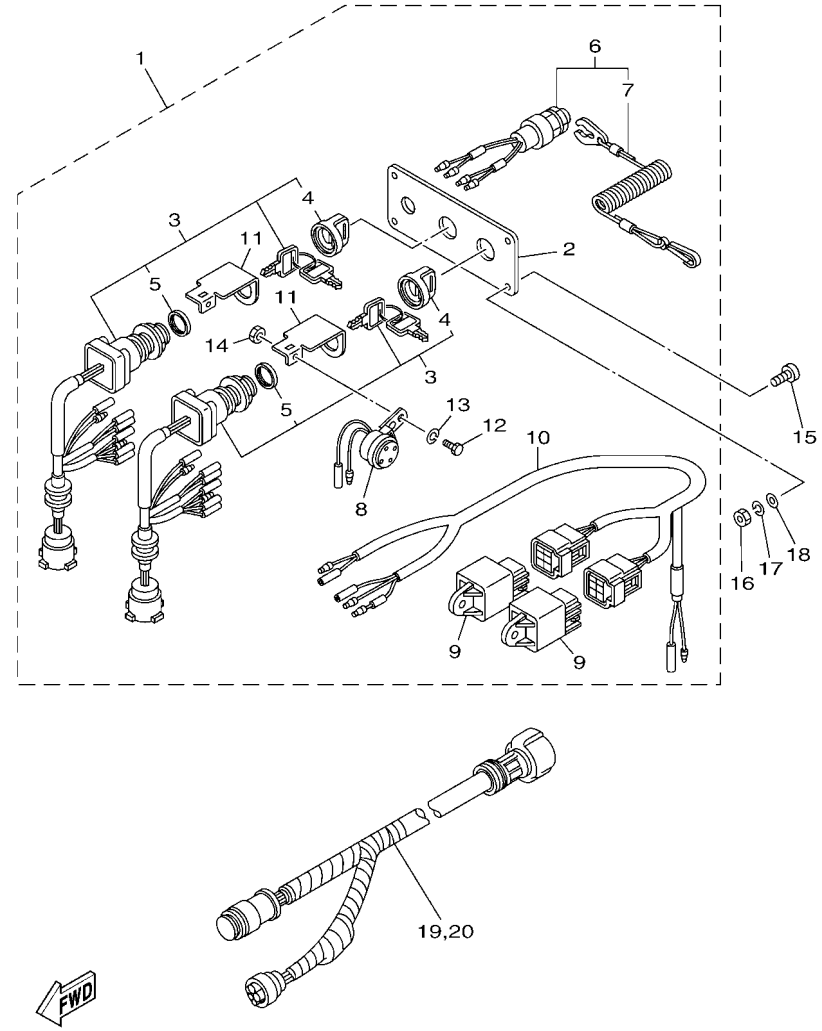

REF. NO.	PART NO. N° PIECES	DESCRIPTION DESCRIPTION	6ALL	6ASK	6AML	6ATK		REMARKS REMARQUES
1	6Y8–82570–05	PANEL SWITCH ASSY PLATINE D'INTERRUPEUR CPLT			1			FOR RUS FOR RUS
2	6Y8–82571–01	.PLATE, PANEL SWITCH .TABLEAU, CONTACTEUR			1			
3	6Y8–82510–03	.MAIN SWITCH ASSY .CONTACTEUR A CLEF COMPLET			2			
4	676–82577–01	..CAP, KEY ..CABOCHON			1			
5	703–82532–00	..CAP ..COUVERCLE			1			
6	6K1–82575–01	.ENGINE STOP SWITCH ASSY .COUPE CIRCUIT CPLT			1			
7	682–82556–00	..LANYARD, STOP SWITCH ..CORDON DU COUPE CIRCUIT			1			
8	6R5–83383–00	.BUZZER .RONFLEUR			2			
9	68V–81950–00	.RELAY ASSY .RELAIS COMPLET			2			
10	6Y8–82507–00	.LEAD, IGNITION SWITCH RELAY .FIL			1			
11	64D–82581–00	.STAY, CORD CLAMP .SUPPORT, COLLIER DE CORDON			2			
12	97003–05012	.BOLT .BOULON			2			
13	92903–05100	.WASHER, SPRING .RONDELLE, GROWER			2			
14	95303–05700	.NUT .ECROU			2			
15	90149–05M05	SCREW VIS			4			FOR RUS FOR RUS
16	95380–05600	NUT ECROU			4			FOR RUS FOR RUS
17	92990–05100	WASHER, SPRING RONDELLE, GROWER			4			FOR RUS FOR RUS
18	92990–05600	WASHER, PLATE RONDELLE, PLATE			4			FOR RUS FOR RUS
19	6K1–8258A–41	EXTENSION, WIRE HARNESS (8M) EXTENSION, FAISCEAU DE FILS(8M			1			FOR RUS (10P) FOR RUS (10P)
20	61B–8258A–02	EXTENSION, WIRE HARNESS (9.5M) EXTENSION, FAISCEAU DE FILS(9.			1			FOR RUS (10P) FOR RUS (10P)

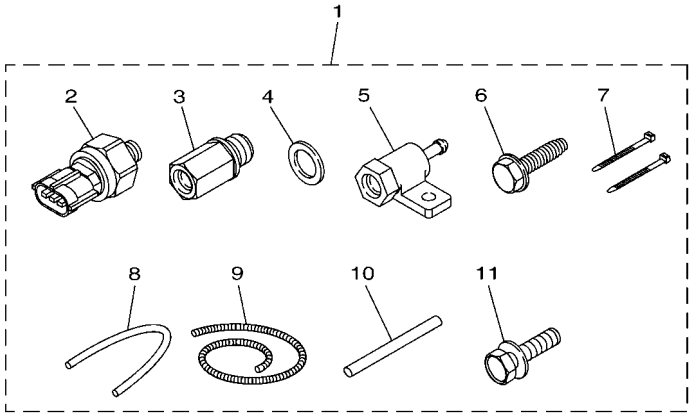

6CL6370-P440

FIG. 45 OPTIONAL PARTS 5 — PIECES OPTIONNELLES 5

REF. NO.	PART NO. N° PIECES	DESCRIPTION DESCRIPTION	6ALL	6ASK	6AML	6ATK		REMARKS REMARQUES
1	63P–8A4L2–07	SENSOR, MODULE 2 SENSOR (ENS.) 2	1					FOR RUS FOR RUS
2	6AW–8366B–10	.SENSOR, WATER PRESSURE .SONDE DE PRESSION D'EAU	2					
3	63P–8366C–00	.ADAPTOR, INPUT .CONNECTEUR 2	1					
4	90430–14115	.GASKET .JOINT	1					
5	60V–8366D–00	.ADAPTOR, INPUT .CONNECTEUR 3	1					
6	90109–06M81	.BOLT .BOULON	1					
7	90465–11M10	.CLAMP .BRIDE	2					
8	90445–07017	.HOSE (L: 550MM) .DURITE (L: 550MM)	1					
9	90447–07013	.HOSE, COVER (L: 700MM) .DURITE, COUVERCLE (L: 700MM)	1					
10	60V–42629–01	.SEAL .JOINT	1					
11	97E95–06516	.BOLT, HEXAGON W/W DEEP RECESS .VIS HEXAGONAL AVC RONDELLE	1					

FIG. 46 OPTIONAL PARTS 6 — PIECES OPTIONNELLES 6

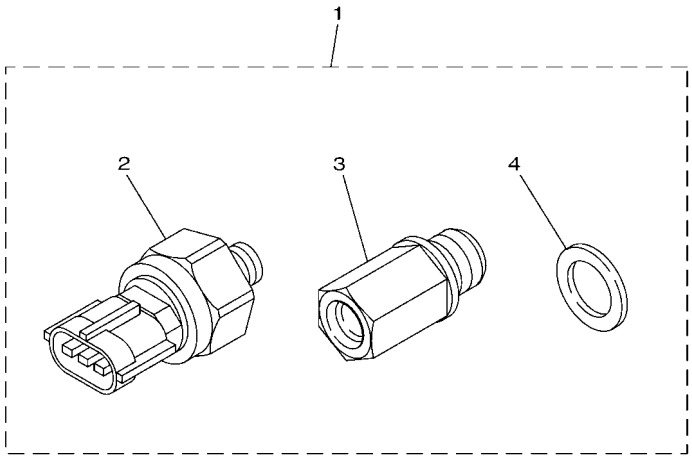

6P2B300-N410

REF. NO.	PART NO. N° PIECES	DESCRIPTION DESCRIPTION	6ALL	6ASK	6AML	6ATK		REMARKS REMARQUES
1	63P–8A4L0–12	SENSOR, MODULE SENSOR (ENS.)			1			FOR RUS FOR RUS
2	6AW–8366B–10	.SENSOR, WATER PRESSURE .SONDE DE PRESSION D'EAU			1			
3	63P–8366C–00	.ADAPTOR, INPUT .CONNECTEUR 2			1			
4	90430–14115	.GASKET .JOINT			1			

FIG. 47 OPTIONAL PARTS 7 — PIECES OPTIONNELLES 7

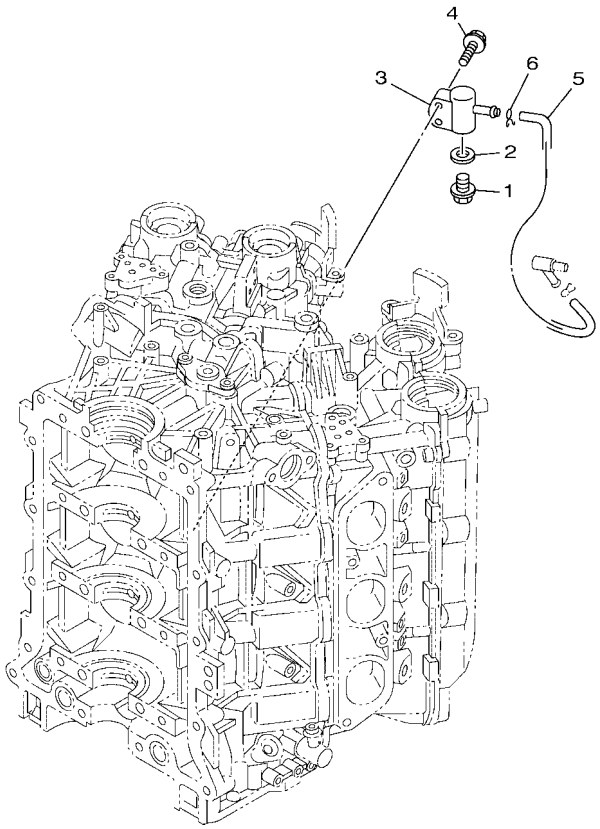

6ALB100-P340

REF. NO.	PART NO. N° PIECES	DESCRIPTION DESCRIPTION	6ALL	6ASK	6AML	6ATK		REMARKS REMARQUES
1	90340–14M06	PLUG, STRAIGHT SCREW PLOT, FILETE DROIT	1	1	1	1		
2	90430–14115	GASKET JOINT	1	1	1	1		
3	6P2–83652–00	CONNECTOR CONNECTEUR	1	1	1	1		
4	97E95–06530	BOLT, HEXAGON W/W DEEP RECESS VIS HEXAGONAL AVC RONDELLE	2	2	2	2		
5	6H4–24311–00	PIPE, FUEL 1 DURITE A ESSENCE	1	1	1	1		
6	90467–08M18	CLIP JONC	1	1	1	1		

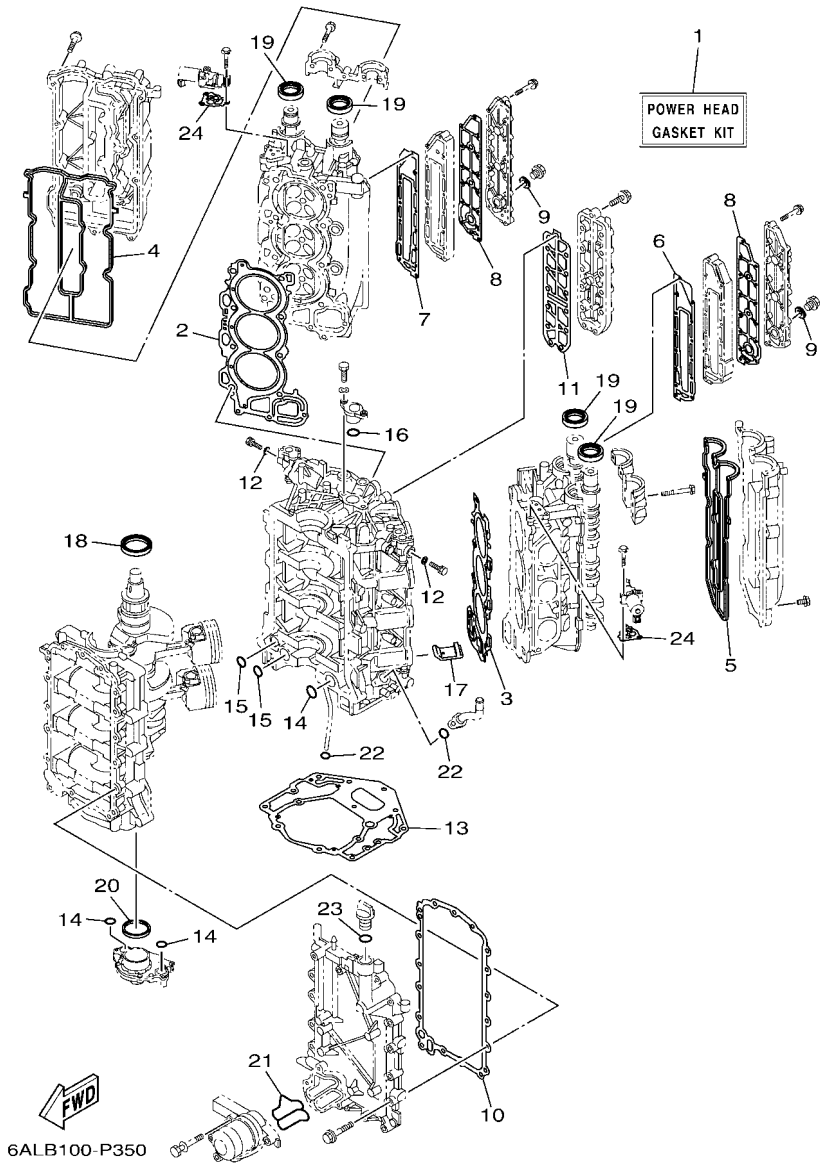

FIG. 48 REPAIR KIT 1 — KITS DE REPARATION 1

REF. NO.	PART NO. N° PIECES	DESCRIPTION DESCRIPTION	6ALL	6ASK	6AML	6ATK		REMARKS REMARQUES
1	6P2–W0001–04	POWER HEAD GASKET KIT POCHETTE DE JINTS TETE MOTRICE	1	1	1	1		
2	6P2–11181–00	.GASKET, CYLINDER HEAD 1 .JOINT, DE CULASSE 1	1	1	1	1		
3	6P2–11182–00	.GASKET, CYLINDER HEAD 2 .JOINT, CULASSE 2	1	1	1	1		
4	6P2–11193–00	.GASKET, HEAD COVER 1 .JOINT, COUVERCLE DE CULASSE 1	1	1	1	1		
5	6P2–11194–00	.GASKET, HEAD COVER 2 .JOINT, COUVERCLE DE CULASSE 2	1	1	1	1		
6	6P2–41112–00	.GASKET, EXHAUST INNER COVER .JOINT, PLAQUE D'ECHAPPEMENT	1	1	1	1		
7	6P2–41122–00	.GASKET, EXHAUST INNER COVER .JOINT, PLAQUE D'EHAPPEMENT	1	1	1	1		
8	6P2–41114–00	.GASKET, EXHAUST OUTER COVER .JOINT, COUVERCLE D'ECHAPPEMENT	2	2	2	2		
9	90201–186F1	.WASHER, PLATE .RONDELLE, PLATE	2	2	2	2		
10	69J–15451–01	.GASKET, CRANKCASE COVER 1 .JOINT, COUVERCLE DE CARTER 1	1	1	1	1		
11	6P2–1131B–00	.GASKET, COVER .JOINT, COUVERCLE	1	1	1	1		
12	90430–05002	.GASKET .JOINT	2	2	2	2		
13	69J–11351–12	.GASKET, CYLINDER .JOINT, D'EMBASE	1	1	1	1		
14	93210–25552	.O-RING .JOINT TORIQUE	3	3	3	3		
15	93210–19MJ1	.O-RING .JOINT TORIQUE	2	2	2	2		
16	93210–25647	.O-RING .JOINT TORIQUE	1	1	1	1		
17	69J–14664–00	.GROMMET, WATER SHUT .PASSE-FIL	2	2	2	2		
18	93102–63004	.OIL SEAL .JOINT SPY	1	1	1	1		
19	93102–38008	.OIL SEAL .JOINT SPY	4	4	4	4		
20	69J–11355–00	.SEAL, CYLINDER 1 .JOINT, SPY CYLINDRE	1	1	1	1		
21	6P2–13477–00	.GASKET .JOINT	1	1	1	1		
22	93210–19MJ3	.O-RING .JOINT TORIQUE	2	2	2	2		
23	93210–24M79	.O-RING .JOINT TORIQUE	1	1	1	1		
24	6CB–1242F–00	.GASKET, FILTER .JOINT, FILTRE	2	2	2	2		

FIG. 49 REPAIR KIT 2 — KITS DE REPARATION 2

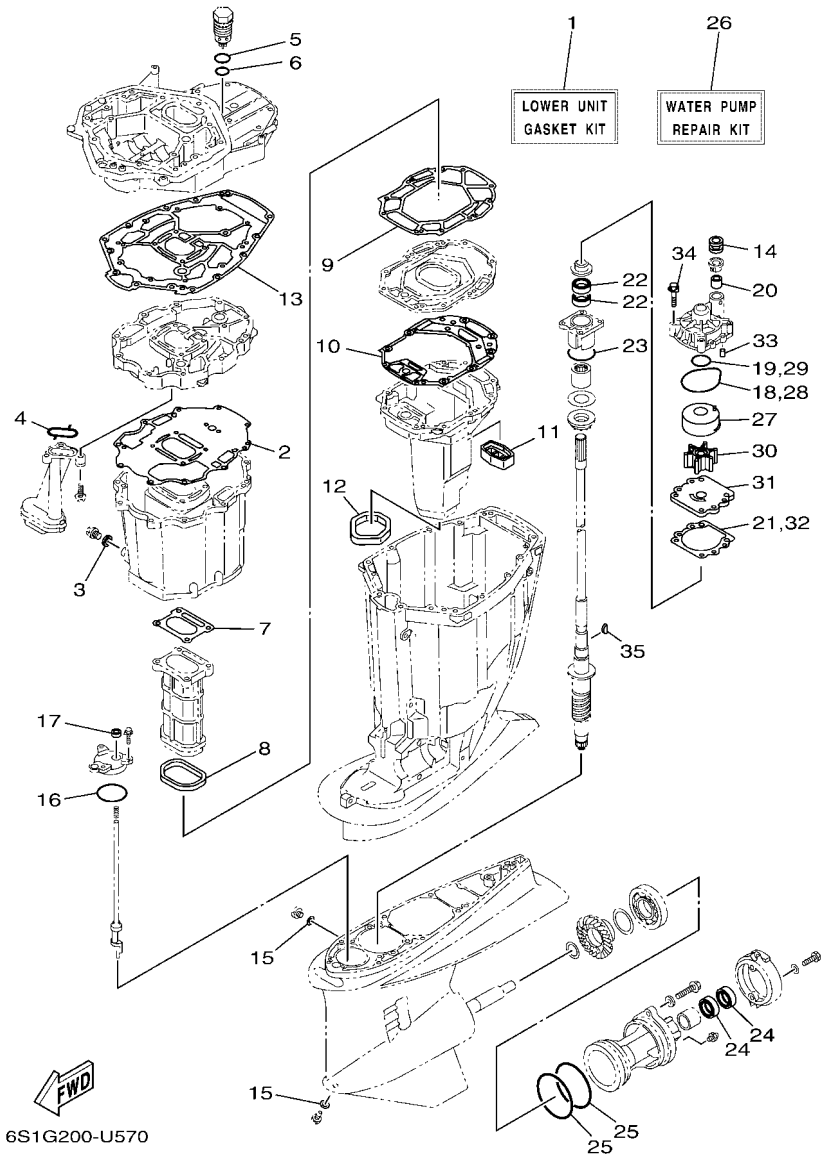

REF. NO.	PART NO. N° PIECES	DESCRIPTION DESCRIPTION	6ALL	6ASK	6AML	6ATK		REMARKS REMARQUES
1	6P2–W0001–24	LOWER UNIT GASKET KIT POCHETTE DE JOINTS EMBASE	1	1	1	1		
2	69J–15312–02	.GASKET, OIL PAN .JOINT DE VENTILATEUR D'HUILE	1	1	1	1		
3	90430–14M09	.GASKET .JOINT	1	1	1	1		
4	69J–13415–00	.SEAL, OIL STRAINER .JOINT, FILTRE A HUILE	1	1	1	1		
5	93210–347A1	.O-RING .JOINT TORIQUE	1	1	1	1		
6	93210–28543	.O-RING .JOINT TORIQUE	1	1	1	1		
7	6P2–41134–00	.GASKET, EXHAUST MANIFOLD .JOINT, PIPE D'ECHAPPEMENT	1	1	1	1		
8	69J–41138–00	.SEAL, EXT. 1 .JOINT DE GROUPE 1	1	1	1	1		
9	69J–41135–A0	.GASKET, EXHAUST MANIFOLD .JOINT, PIPE D'ECHAPPEMENT	1	1	1	1		
10	6S1–41136–01	.GASKET, EXHAUST MANIFOLD 4 .JOINT, PIPE D'ECHAPPEMENT 4	1	1	1	1		
11	69J–45127–01	.SEAL .JOINT	1	1	1	1		
12	69J–45123–00	.GASKET, MUFFLER .JOINT, POT DE DETENTE	1	1	1	1		
13	69J–45113–21	.GASKET, UPPER CASING .JOINT, TUBE D'ARBRE	1	1	1	1		
14	6E5–44366–01	.DAMPER, WATER SEAL 2 .JOINT, TUBE D'EAU 2	1	1	1	1		
15	90430–08003	.GASKET .JOINT	2	2	2	2		
16	93210–64488	.O-RING .JOINT TORIQUE	1	1	1	1		
17	93106–09014	.OIL SEAL .JOINT SPY	1	1	1	1		
18	93210–86M38	.O-RING .JOINT TORIQUE	1	1	1	1		
19	93210–37160	.O-RING .JOINT TORIQUE	1	1	1	1		
20	6E5–44365–01	.DAMPER, WATER SEAL 1 .JOINT, TUBE D'EAU 1	1	1	1	1		
21	6E5–44315–A0	.GASKET, WATER PUMP .JOINT, POMPE A EAU	1	1	1	1		
22	93101–28019	.OIL SEAL .JOINT SPY	2	2	2	2		
23	93210–55M14	.O-RING .JOINT TORIQUE	1	1	1	1		
24	93101–30030	.OIL SEAL .JOINT SPY	2	2	2	2		
25	93211–04384	.O-RING .JOINT TORIQUE	2	2	2	2		
26	61A–W0078–A4	WATER PUMP REPAIR KIT KIT DE REPARATION DE LA POMPE	1	1	1	1		
27	61A–44322–02	.INSERT, CARTRIDGE .CUVETTE	1	1	1	1		

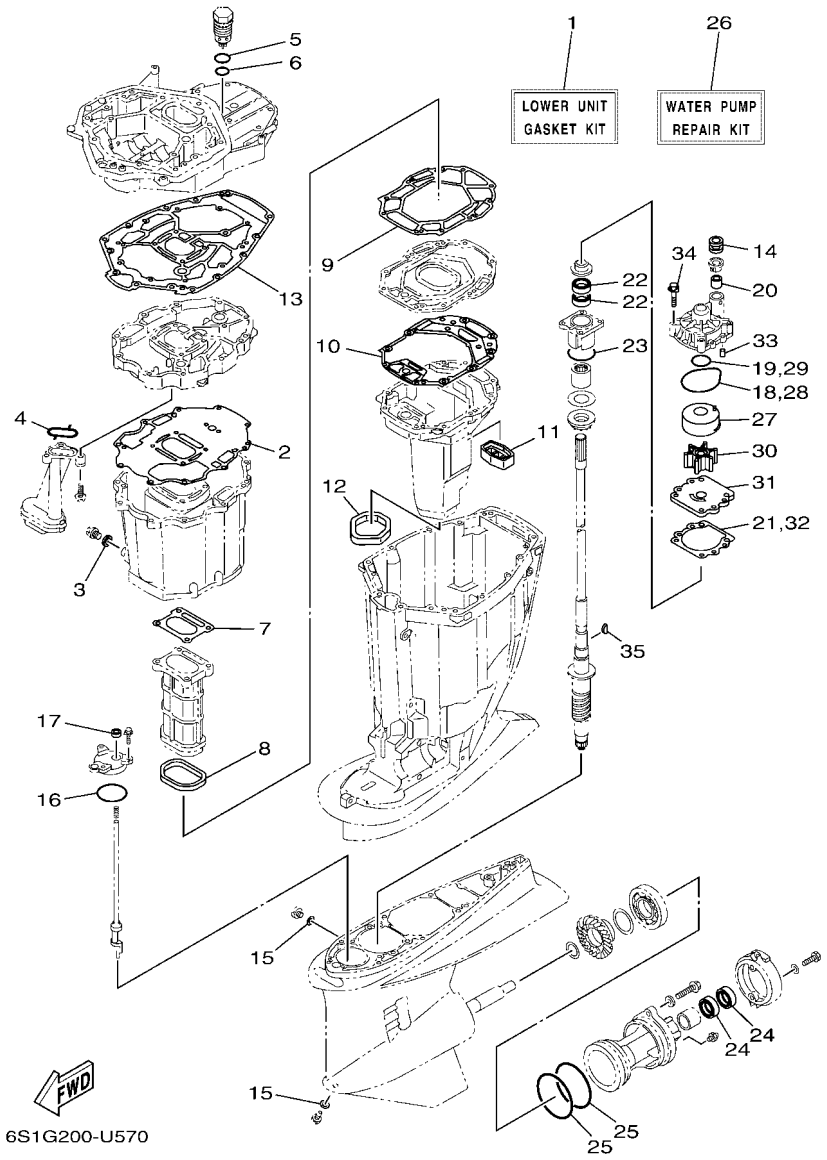

FIG. 49 REPAIR KIT 2 — KITS DE REPARATION 2

REF. NO.	PART NO. N° PIECES	DESCRIPTION DESCRIPTION	6ALL	6ASK	6AML	6ATK		REMARKS REMARQUES
28	93210–86M38	.O-RING .JOINT TORIQUE	1	1	1	1		
29	93210–37160	.O-RING .JOINT TORIQUE	1	1	1	1		
30	6E5–44352–01	.IMPELLER .TURBINE	1	1	1	1		
31	6G5–44323–01	.OUTER PLATE, CARTRIDGE .PLAQUE EXTERIEURE	1	1	1	1		
32	6E5–44315–A0	.GASKET, WATER PUMP .JOINT, POMPE A EAU	1	1	1	1		
33	93606–12019	.PIN, DOWEL .GOUPILLE	2	2	2	2		
34	90119–08191	.BOLT, WITH WASHER .BOULON, AVEC RONDELLE	4	4	4	4		
35	90280–04M05	.KEY, WOODRUFF .CLAVETTE, DEMI-LUNE	1	1	1	1		

PART NO. N° PIECES	REF. NO.
6P2–11000–06	3 – 1
6P2–11110–12–9S	5 – 2
69J–11119–00	3 – 13
6P2–11119–00	6 – 16
6P2–1111E–00	6 – 17
6P2–11120–12–9S	5 – 10
6S5–11133–10	5 – 3
	5 – 11
6P2–11135–00	5 – 34
6P2–11181–00	5 – 22
	48 – 2
6P2–11182–00	5 – 27
	48 – 3
6P2–11191–00–9S	5 – 33
6P2–11192–00–9S	5 – 40
6P2–11193–00	5 – 36
	48 – 4
6P2–11194–00	5 – 41
	48 – 5
69J–11301–02	5 – 16
69J–11313–00	3 – 40
6P2–1131B–00	3 – 18
	48 – 11
6P2–1131C–00–9S	3 – 15
6E5–11325–00	1 – 1
	1 – 8
	1 – 15
	3 – 16
	6 – 9
	20 – 10
6ML–11325–00	1 – 5
	5 – 17
6P2–11325–00	1 – 7
	6 – 8
6P3–11325–00	1 – 3
	3 – 24
	3 – 61
67F–11328–01	5 – 18
69J–11351–12	3 – 37
	48 – 13
69J–11355–00	31 – 16
	48 – 20
6AW–11371–10	30 – 7
676–11372–00	5 – 5
6P2–11372–00	8 – 25
6P2–11377–00	8 – 28
6P2–11410–10	4 – 1
6P2–11416–00	4 – 4

PART NO. N° PIECES	REF. NO.
6P2–11416–10	4 – 4
6P2–11416–20	4 – 4
6P2–11417–00	4 – 5
6P2–11417–10	4 – 5
6P2–11417–20	4 – 5
6AW–11426–01	4 – 6
6AW–11427–01	4 – 7
6CB–11478–00	4 – 2
6FA–11567–00	7 – 17
6P2–11590–03	7 – 25
63P–11603–01	4 – 12
63P–11604–00	4 – 12
6P2–11631–11–93	4 – 11
63P–11633–10	4 – 13
63P–11634–00	4 – 14
6P2–11635–10	4 – 11
6P2–11650–00	4 – 8
63P–11654–10	4 – 9
6S1–11656–00	4 – 10
6S1–11656–10	4 – 10
6S1–11656–20	4 – 10
6P2–12111–10	7 – 1
6CB–12113–00	7 – 4
51Y–12119–00	7 – 7
6DX–12121–00	7 – 2
6P2–12171–11	7 – 9
6P2–12172–11	7 – 13
6P2–12181–11	7 – 11
6P2–12182–11	7 – 15
69J–12233–00	30 – 10
6P2–1240H–00–9S	3 – 22
6P3–1240H–00–9S	3 – 59
67F–12411–01	1 – 2
	3 – 20
67F–12412–00	3 – 21
6CB–1242F–00	6 – 20
	48 – 24
6P2–1243A–00	3 – 28
6P2–1243E–00	3 – 29
6P2–1243F–00	3 – 30
6P2–12481–12	9 – 34
6P2–12482–00	9 – 6
6P2–12483–00	9 – 8
6P2–12484–01	9 – 2
6P2–12485–00	9 – 16
6P2–1248A–00	9 – 17
6P2–1248E–00	9 – 18
6P2–12491–00	20 – 8

PART NO. N° PIECES	REF. NO.
6DR–12572–00	24 – 13
6R3–12581–00	24 – 14
6R3–12582–00	24 – 15
6R3–12583–00	24 – 16
6P2–12615–00	7 – 22
6P2–12623–00	7 – 19
6P2–12645–22	7 – 18
6P2–12663–00	7 – 20
6S5–12858–00	3 – 45
6CB–13016–00	1 – 10
	13 – 5
6AW–13119–00	31 – 14
6KA–13132–00	13 – 26
6P2–13160–11	12 – 1
6P2–13161–00	12 – 2
6P2–13170–11	12 – 6
6P2–13171–00	12 – 7
6P2–13300–00	31 – 12
69J–13329–01	31 – 13
69J–13411–01	31 – 8
69J–13415–00	31 – 10
	49 – 4
60L–13437–63	17 – 20
69J–13440–04	1 – 4
	3 – 44
6P2–13446–00–9S	3 – 46
67F–13448–00	2 – 13
6P2–13448–00	5 – 45
6P2–13477–00	3 – 47
	48 – 21
6P2–13532–10	11 – 3
6P2–13533–00	11 – 2
6P2–13545–00	11 – 7
6P2–13546–00	11 – 10
6P2–13547–00	11 – 18
6P2–13548–10	11 – 19
6P2–13556–00	10 – 4
6P2–13557–00	10 – 5
6P2–13564–00	8 – 3
6P2–13573–00	10 – 11
6P2–13574–00	10 – 21
6P2–13577–00	12 – 5
	12 – 10
68V–13577–01	14 – 7
	14 – 14
6P2–13578–00	10 – 8
6P2–13588–01	10 – 7
6CB–13593–00	13 – 23

PART NO. N° PIECES	REF. NO.
6P2–13594–00	8 – 4
6P2–13595–00	11 – 4
69J–13631–00	31 – 15
6P2–13641–00	8 – 13
6P2–13642–00	8 – 16
6P2–13645–00	8 – 14
	8 – 17
6P2–13646–00	8 – 15
6P2–13647–00	8 – 18
6P2–13711–00	10 – 3
63P–13716–00	13 – 22
6P2–13750–14	10 – 1
6P2–13751–04	10 – 2
6P2–13758–00	11 – 14
6P2–13761–11	12 – 3
	12 – 8
6AW–13781–00	13 – 30
6AW–13784–00	13 – 33
6CB–13906–01	13 – 8
6P2–13907–22	13 – 24
63P–13915–00	1 – 11
	13 – 25
6P2–13973–30	14 – 10
6P2–13974–30	14 – 11
6C5–1410B–00	12 – 4
	12 – 9
6CB–14146–00	13 – 10
6P2–14149–00	14 – 2
6P2–14159–00	10 – 13
69J–14164–00	10 – 22
6P2–14180–57	13 – 1
6AW–14181–11	13 – 15
6AW–14182–11	13 – 2
6P2–14191–00	13 – 16
68V–14216–00	13 – 12
6CB–14216–00	13 – 6
6CB–14239–00	13 – 17
6P2–14255–00	10 – 12
6P2–14349–00	11 – 1
68V–14356–00	10 – 24
6P2–14360–00	10 – 6
6P2–14386–00	13 – 37
6P2–1441J–01	8 – 22
6CB–14429–01	13 – 19
63P–14435–00	8 – 32
6P2–14440–00	8 – 21
6LH–1447B–00	13 – 29
6P2–14496–00	10 – 9

PART NO. N° PIECES	REF. NO.
6CB–14546–00	13 – 28
6CB–14564–00	13 – 9
63P–14567–00	13 – 21
69J–14624–01	30 – 45
69J–14664–00	48 – 17
69J–14664–01	3 – 43
69J–14711–00–9S	30 – 22
2D1–14737–01	20 – 3
6P2–14752–00	9 – 19
6P2–1475A–10	11 – 5
6P2–1475E–00	11 – 6
6P2–1475F–00	11 – 8
6P2–1475G–00	11 – 9
68V–1475H–00	13 – 13
68V–1475J–00	13 – 14
6CB–14984–00	1 – 12
	13 – 39
6CB–14985–00	13 – 27
6P2–15100–11	3 – 2
6P2–15142–00	5 – 38
6P2–15143–00	5 – 43
6P2–15187–00	3 – 5
69J–15311–10–CA	31 – 1
69J–15312–02	30 – 47
	49 – 2
69J–15316–01	30 – 32
6P2–15362–10	31 – 19
6G8–15363–00	3 – 49
6P2–15373–02	8 – 19
6P2–15377–10	31 – 20
6P2–15411–01–9S	3 – 8
69J–15451–01	3 – 9
	48 – 10
6P2–15481–00	3 – 6
6P2–15512–00	7 – 26
69J–15761–00	31 – 2
6P2–2134X–00	10 – 14
6E5–21744–00	9 – 7
	11 – 16
6YM–22480–00	41 – 2
6P2–24135–00	11 – 12
6P2–24136–00	11 – 13
6P2–24137–00	11 – 15
6P2–2416A–00	11 – 11
6P2–24170–00	10 – 19
6P2–2419A–00	10 – 15
6CB–24217–00	13 – 7
6P2–24300–01	14 – 13

PART NO. N° PIECES	REF. NO.
6AW–24300–11	14 – 12
6YK–24307–43	16 – 1
6Y2–24307–52	16 – 2
6H4–24311–00	47 – 5
6P2–24313–50	15 – 17
6P2–24314–00	15 – 2
61A–24316–00	9 – 20
6AW–24317–20	14 – 5
6AW–24323–20	14 – 3
6AW–24324–30	14 – 4
6E5–24351–51	16 – 4
6Y2–24360–60	16 – 6
6P2–24376–00	11 – 20
6CE–24376–01	9 – 3
6R3–24377–00	15 – 24
6R3–24377–10	15 – 4
688–24378–00	9 – 21
	9 – 22
	9 – 23
	9 – 24
	9 – 25
	11 – 17
69J–24378–00	2 – 14
6E5–24378–00	14 – 8
6S1–24378–00	3 – 31
6E5–24379–00	24 – 10
68V–24379–10	13 – 11
6GR–24410–02	13 – 31
6P2–24419–00	8 – 8
6P2–24422–10	8 – 6
6CB–24452–10	13 – 18
4SV–24453–00	13 – 34
6CB–24460–00	13 – 4
6P3–24469–00	15 – 9
6CB–24482–00	13 – 20
6AW–24491–10	13 – 32
6CB–24492–00	13 – 36
6CB–24501–01	1 – 9
	13 – 3
6P3–24519–00	15 – 10
6P3–24560–04	15 – 6
6P3–24562–03	15 – 8
6P3–24563–02	1 – 13
	15 – 7
6P3–24564–00	1 – 14
	15 – 11
6P2–24566–11	15 – 12
6CB–24592–00	13 – 38

PART NO. N° PIECES	REF. NO.
68V–2481H–00	10 – 25
69J–28100–03	15 – 25
6CB–2812A–00	20 – 36
6P2–28199–7L–D0	15 – 26
6P2–28199–7L–E0	15 – 26
6P2–28199–7L–F0	15 – 26
6P2–28199–7L–G0	15 – 26
6P2–28199–7L–H0	15 – 26
6P2–28199–7L–S0	15 – 26
6P2–28199–8L–K0	15 – 27
6P2–28199–8L–L0	15 – 27
6P2–28199–8L–M0	15 – 27
6P2–28199–8L–N0	15 – 27
6P2–28199–8L–P0	15 – 27
6P2–28199–8L–R0	15 – 27
69J–41111–01–9S	6 – 1
6P2–41112–00	6 – 5
	48 – 6
69J–41113–02–9S	6 – 3
6P2–41114–00	6 – 7
	48 – 8
69J–41121–01–9S	6 – 2
6P2–41122–00	6 – 6
	48 – 7
69J–41123–02–9S	6 – 4
69J–41131–11–CA	30 – 13
69J–41132–20–9S	30 – 15
6P2–41134–00	30 – 16
	49 – 7
69J–41135–A0	30 – 19
	49 – 9
6S1–41136–01	30 – 21
	49 – 10
69J–41137–10–CA	30 – 1
69J–41138–00	30 – 18
	49 – 8
6CB–41273–00	25 – 39
69J–42510–00–8D	27 – 5
6AL–42610–22	2 – 1
6AS–42610–22	2 – 1
6P2–42615–00	23 – 8
6P2–4261A–02	2 – 2
60V–42629–01	45 – 10
68F–42647–01	2 – 3
69J–42647–01	2 – 4
68F–42648–01	2 – 11
60V–42651–01	2 – 8
60V–42652–00	2 – 12

PART NO. N° PIECES	REF. NO.
68F–42663–01	2 – 10
69J–42663–01	2 – 5
6AS–42675–00	2 – 19
6AS–42676–00	2 – 20
6AL–42677–00	2 – 21
6AS–42677–00	2 – 21
6AL–42678–10	2 – 18
6AS–42678–10	2 – 18
63P–42681–20	2 – 22
6P2–42710–00–8D	23 – 1
648–42715–00	25 – 27
69J–42716–01	23 – 9
61A–42717–00	23 – 18
6P2–42717–00	23 – 3
69J–42717–01	23 – 17
6P2–42718–00	23 – 4
6P2–42722–00	23 – 28
69J–42723–01	21 – 20
6E5–42724–01	30 – 6
6P2–42725–02	23 – 7
6H1–42726–22	23 – 13
61A–42727–01	23 – 15
6P2–42738–00–8D	23 – 2
69J–42741–00–8D	24 – 1
6P2–42743–00	23 – 48
6H4–42748–01	23 – 6
68F–42753–00	23 – 55
6P2–42761–00	3 – 34
67F–42761–01	3 – 33
6P2–42766–20	23 – 50
69J–42769–01	30 – 28
69J–42771–00–8D	24 – 3
69J–42774–10	24 – 7
6EE–42794–40	23 – 59
6EE–42794–50	23 – 60
69J–42815–00–8D	23 – 30
69J–42816–00–8D	23 – 39
69J–42817–00–8D	23 – 31
63P–42818–01	23 – 34
68V–42818–01	23 – 42
6P2–42828–00–9S	23 – 27
69J–42828–02–9S	23 – 26
68F–42828–11–9S	23 – 37
69J–43111–03–8D	26 – 1
69J–43112–03–8D	26 – 11
6E5–43126–10	26 – 38
6R3–43131–00	26 – 17
61A–43132–01	26 – 9

PART NO. N° PIECES	REF. NO.
61A–43133–01	26 – 12
64D–43144–00	23 – 45
6G5–43144–00	26 – 28
6E5–43145–01	36 – 8
6G5–43148–00	26 – 33
61A–43181–01	26 – 30
6G5–43185–02	26 – 31
61A–43311–22–8D	26 – 25
6AW–43376–00	27 – 3
69J–43800–13–8D	28 – 1
69J–43801–01	28 – 4
6KA–43804–01	29 – 3
6KA–43805–00	29 – 2
6KA–43806–00	29 – 5
6CE–4380P–00	28 – 12
6CE–43810–01	28 – 3
61A–43811–00	28 – 9
63P–43812–20	28 – 76
61A–43813–02	28 – 18
6H1–43814–11	28 – 17
69J–43816–00	28 – 62
69J–43817–00	28 – 67
61A–43818–00	28 – 25
69J–4381C–00	28 – 30
	28 – 35
69J–4381J–00	28 – 63
69J–43820–01	28 – 78
61A–43821–02	28 – 77
69J–43828–00	28 – 70
6H1–43829–00	28 – 73
69J–4382E–00	28 – 11
69J–43830–01	28 – 33
69J–43831–00	28 – 65
69J–43833–02	28 – 21
69J–43835–10	28 – 19
6CE–43840–01	28 – 2
6CJ–43841–00	28 – 42
6CJ–43843–00	28 – 53
6H1–43844–10	28 – 55
63P–43844–20	28 – 50
69J–43845–00	28 – 28
69A–4384F–00	28 – 39
69J–4384G–00	28 – 58
6H1–4384G–11	28 – 54
69J–4384H–00	28 – 10
61A–4384H–10	28 – 81
6CJ–4384M–00	28 – 38
69J–43851–00	28 – 49

PART NO. N° PIECES	REF. NO.
69J–43853–00	28 – 45
69J–43854–00	28 – 57
69J–43855–00	28 – 52
6H1–43856–10	28 – 56
61A–43861–00	28 – 14
	28 – 16
	28 – 74
63P–43861–20	28 – 6
6KA–43862–00	29 – 14
6D8–43863–00	28 – 27
	28 – 75
61A–43864–00	28 – 80
60V–4386A–00	28 – 44
6KA–4386K–00	29 – 6
61A–43871–00	28 – 15
69J–43871–00	28 – 61
6H1–43872–00	28 – 7
61A–43874–00	28 – 79
6H1–43875–00	28 – 29
61A–43875–10	28 – 82
61A–43876–01	28 – 26
6KA–43879–00	29 – 8
6KA–4387G–00	29 – 9
69J–43880–20	29 – 1
69J–43881–20	29 – 10
6KA–43882–00	29 – 13
6H1–43883–00	28 – 43
69J–43888–00	28 – 71
69J–4388E–01	28 – 23
69J–4388F–00	28 – 68
6KA–4388F–00	29 – 12
69J–4388H–00	28 – 66
69J–4388J–00	28 – 20
6KA–43892–00	29 – 4
6CJ–43893–00	28 – 46
69J–43894–00	28 – 41
69J–43899–01	28 – 31
61A–4389H–01	28 – 8
69J–4389J–00	28 – 32
	28 – 36
69J–44117–00	25 – 7
69J–44118–00	25 – 26
69J–44120–02	25 – 32
69J–44120–12	25 – 32
6P2–44121–00	25 – 21
69J–44122–00	25 – 22
6P2–44139–00	25 – 38
69J–44150–00	32 – 15

PART NO. N° PIECES	REF. NO.
69K–44150–00	34 – 17
69J–44176–01	25 – 9
703–44189–20	39 – 36
703–44189–30	39 – 42
6X3–44191–00	39 – 47
6DA–44194–00	27 – 29
61A–44311–01	32 – 18
	34 – 20
6E5–44312–00	32 – 23
	34 – 25
6E5–44315–A0	32 – 27
	34 – 29
	49 – 21
	49 – 32
61A–44322–02	32 – 19
	34 – 21
	49 – 27
6G5–44323–01	32 – 26
	34 – 28
	49 – 31
6E5–44352–01	32 – 24
	34 – 26
	49 – 30
6S1–44361–02	33 – 3
	35 – 3
6S1–44361–12	33 – 3
6D0–44362–01	33 – 15
	35 – 15
6D0–44365–00	33 – 16
	35 – 16
6E5–44365–01	32 – 22
	33 – 1
	34 – 24
	35 – 1
	49 – 20
663–44366–01	32 – 6
	34 – 8
6D0–44366–01	33 – 17
	35 – 17
6E5–44366–01	30 – 49
	33 – 2
	35 – 2
	49 – 14
6D0–44367–00	33 – 14
	35 – 14
6P2–44391–00	23 – 16
61A–44511–01	27 – 32
69J–44514–00	27 – 23

PART NO. N° PIECES	REF. NO.
6G5–44526–00	26 – 3
69J–44532–00	27 – 26
69J–44533–00	27 – 31
68F–44533–02	3 – 35
69J–44551–00–8D	27 – 10
61A–44552–01–CA	27 – 21
60X–44555–00	27 – 13
61A–44575–01	27 – 12
69J–45111–10–8D	30 – 27
69J–45113–21	30 – 29
	49 – 13
69J–45123–00	30 – 26
	49 – 12
69J–45127–01	30 – 25
	49 – 11
69J–45151–00–8D	24 – 8
69J–45152–10	30 – 33
61A–45155–01	30 – 37
69J–45159–00	30 – 51
69J–45181–10–9S	30 – 20
69J–45211–02–8D	30 – 48
61A–45214–11	33 – 8
	35 – 8
61A–45215–11	33 – 9
	35 – 9
6G5–45251–02	1 – 16
	26 – 2
6AS–45300–00–8D	32 – 1
6AT–45300–00–8D	34 – 1
6AS–45300–10–8D	32 – 1
6P2–45301–00–8D	32 – 2
	34 – 2
69J–45318–01	30 – 35
61A–45321–01	32 – 11
	34 – 13
61A–45331–00–9S	32 – 30
	34 – 32
6DX–45332–00	32 – 60
6DY–45332–00	34 – 62
688–45341–10	32 – 8
	34 – 10
6E5–45344–00	32 – 39
	34 – 41
6D0–45361–00–8D	32 – 72
	34 – 77
6CE–45373–00	1 – 19
	33 – 12
	35 – 12

PART NO. N° PIECES	REF. NO.
6D0–45375–01	33 – 7
	35 – 7
61A–45376–00	32 – 10
	34 – 12
61A–45378–00	30 – 42
61B–45383–00	34 – 68
6DY–45384–00	34 – 69
6P2–45501–01	32 – 41
	34 – 43
6P2–45501–11	32 – 41
61B–45538–01	34 – 4
6FJ–45551–00	32 – 42
	34 – 44
6FJ–45560–00	32 – 45
6FK–45560–00	34 – 47
61A–45567–00	32 – 5
	34 – 7
61A–45567–10	32 – 5
	34 – 7
61A–45567–20	32 – 5
	34 – 7
61A–45567–30	32 – 5
	34 – 7
61A–45567–40	32 – 5
	34 – 7
61A–45567–50	32 – 5
	34 – 7
61A–45567–60	32 – 5
	34 – 7
6FJ–45571–00	32 – 63
6FK–45571–00	34 – 65
61A–45577–00	32 – 65
69K–45577–00	34 – 70
61A–45577–10	32 – 65
69K–45577–10	34 – 70
61A–45577–20	32 – 65
69K–45577–20	34 – 70
61A–45577–30	32 – 65
69K–45577–30	34 – 70
61A–45577–40	32 – 65
69K–45577–40	34 – 70
61A–45577–50	32 – 65
69K–45577–50	34 – 70
61A–45577–60	32 – 65
69K–45577–60	34 – 70
6P2–45578–00	32 – 64
6K1–45578–01	34 – 67
6K1–45578–10	34 – 67

PART NO. N° PIECES	REF. NO.
6P2–45578–10	32 – 64
6K1–45578–20	34 – 67
6P2–45578–20	32 – 64
6K1–45578–30	34 – 67
6P2–45578–30	32 – 64
6K1–45578–40	34 – 67
6P2–45578–40	32 – 64
6K1–45578–50	34 – 67
6K1–45578–60	34 – 67
61A–45587–00	32 – 33
	34 – 35
61A–45587–10	32 – 33
	34 – 35
61A–45587–20	32 – 33
	34 – 35
61A–45587–30	32 – 33
	34 – 35
61A–45587–40	32 – 33
	34 – 35
61A–45587–50	32 – 33
	34 – 35
61A–45587–60	32 – 33
	34 – 35
69J–45611–00	32 – 48
69K–45611–01	34 – 50
69J–45631–00	32 – 52
	34 – 54
61A–45632–00	32 – 51
	34 – 53
61A–45633–00	32 – 53
	34 – 55
61A–45634–01	32 – 50
	34 – 52
61A–45635–00	32 – 55
	34 – 57
61B–45641–01	34 – 51
61A–45641–02	32 – 49
6H1–45668–00	32 – 54
	34 – 56
61A–45972–00	33 – 24
61B–45972–00	35 – 24
69J–45987–00	33 – 18
	35 – 18
688–45997–01	33 – 19
	35 – 19
6BR–45B70–00	33 – 23
6BS–45B70–00	35 – 23
6BR–45B72–00	33 – 23

PART NO. N° PIECES	REF. NO.
6BS–45B72–00	35 – 23
6BR–45B74–00	33 – 23
6BS–45B74–00	35 – 23
6P2–46241–02	7 – 24
704–48119–60	40 – 11
EL8–48127–00	40 – 24
704–48128–00	40 – 64
703–48128–10	39 – 39
703–48129–00	39 – 41
704–48129–11	40 – 2
704–48129–60	40 – 69
704–48144–20	40 – 53
703–48152–10	39 – 6
703–48153–00	39 – 61
704–48153–00	40 – 58
704–48156–00	40 – 65
EL8–48164–00	40 – 42
704–48166–00	40 – 70
704–48167–30	40 – 72
704–48176–10	40 – 54
704–48178–00	40 – 71
703–48189–00	39 – 19
EL8–48191–00	40 – 17
704–48192–00	40 – 46
704–48192–P0	40 – 55
703–48198–00	39 – 16
703–48207–25	38 – 1
	39 – 1
704–48207–R2	38 – 2
	40 – 1
703–48211–10	39 – 25
703–48212–10	39 – 26
703–48213–10	39 – 27
703–48215–11	39 – 46
704–48215–70	40 – 13
703–48219–10	39 – 34
704–48219–R0	40 – 52
703–48221–10	39 – 28
704–48221–R0	40 – 43
703–48222–20	39 – 31
704–48222–20	40 – 62
704–48222–30	40 – 33
703–48223–10	39 – 32
704–48224–R0	40 – 49
703–48225–10	39 – 33
704–48225–R0	40 – 45
703–48227–00	39 – 30
704–48229–20	40 – 60

PART NO. N° PIECES	REF. NO.
704–48229–30	40 – 36
704–48231–00	40 – 26
703–48232–00	39 – 2
704–48232–P1	40 – 41
704–48233–00	40 – 56
703–48234–00	39 – 20
704–48234–00	40 – 51
703–48235–00	39 – 5
704–48235–00	40 – 57
703–48236–00	39 – 18
703–48238–00	39 – 24
704–48238–00	40 – 40
EL8–48241–00	40 – 27
704–48242–10	40 – 44
703–48243–00	39 – 17
703–48244–00	39 – 23
EL8–48244–00	40 – 30
703–48245–00	39 – 13
EL8–48245–00	40 – 31
701–48246–00	40 – 5
703–48246–00	39 – 29
701–48248–00	39 – 15
	40 – 39
EL8–48251–00	40 – 3
703–48252–00	39 – 14
EL8–48254–00	40 – 28
EL8–48259–00	40 – 7
704–48261–00	40 – 16
703–48261–01	39 – 4
704–48262–00	40 – 8
703–48264–00	39 – 8
704–48264–00	40 – 9
704–48265–00	40 – 4
703–48265–10	39 – 11
703–48268–00	39 – 7
703–48271–00	39 – 3
704–48271–00	40 – 23
EL8–48279–00	40 – 50
703–48281–00	39 – 35
704–48281–00	40 – 14
EL8–48281–00	40 – 12
704–48283–00	40 – 18
703–48284–10	39 – 58
704–48284–P0	40 – 67
704–48285–20	40 – 68
701–48287–00	39 – 45
704–48287–00	40 – 21
703–48293–11	39 – 44

PART NO. N° PIECES	REF. NO.
701–48320–50	38 – 3
701–48320–60	38 – 3
701–48320–80	38 – 3
6E5–48344–00	25 – 5
	25 – 41
703–48345–01	39 – 21
	40 – 20
701–48350–00	38 – 3
701–48350–20	38 – 3
703–48358–01	39 – 22
	40 – 25
6P2–48531–00	25 – 1
63P–48538–00	25 – 3
6E5–61303–01	37 – 5
6E5–61310–00	37 – 1
6E5–61311–11	37 – 3
6E5–61313–00	37 – 2
6E5–61315–00	37 – 4
6E5–61350–02	36 – 1
6E5–61351–01	36 – 2
6E5–61355–00	36 – 5
6P2–81128–00	17 – 19
6P2–81332–00	17 – 13
6P2–81337–02	17 – 15
6P2–81443–00	17 – 3
6P2–81450–00	17 – 1
6P2–81460–00	17 – 2
6P2–81614–10	20 – 2
6BR–81800–02	22 – 1
69J–81801–11	22 – 5
67F–81807–00	22 – 10
67F–81808–00	22 – 8
67F–81809–00	22 – 19
67F–81810–00	22 – 3
67F–81813–00	22 – 6
67F–81820–00	22 – 7
67F–81821–00	22 – 13
6K7–81826–11	22 – 24
69J–81828–00	22 – 25
67F–81830–00	22 – 17
67F–81832–00	22 – 11
67F–81836–00	22 – 12
6C5–81839–00	22 – 21
67F–8183R–00	22 – 15
60V–8183T–00	22 – 18
6P2–8183X–00	20 – 26
69J–81840–11	22 – 4
67F–81841–00	22 – 14

PART NO. N° PIECES	REF. NO.
69J–81842–00	22 – 20
6P2–81845–10	19 – 6
67F–81846–00	22 – 26
67F–81850–00	22 – 2
67F–81857–00	22 – 9
6C5–81869–00	22 – 23
67F–81891–00	22 – 16
6DA–81919–11	20 – 43
6Y8–81920–01	42 – 2
	43 – 1
6Y8–81920–11	42 – 4
6P2–81923–00	20 – 44
6P2–81925–01	20 – 13
63P–81941–00	22 – 22
6P2–81948–10	20 – 17
69J–81949–03	21 – 24
63P–81950–00	20 – 23
68V–81950–00	44 – 9
704–81950–11	40 – 59
6P2–81960–12	20 – 1
6P2–81972–00–9S	20 – 5
60V–81975–A0	20 – 4
6FM–81980–01	21 – 3
6EE–81994–40	17 – 21
6EE–81994–50	17 – 22
6AH–81996–00	23 – 61
6P2–82105–03	20 – 48
6P2–82113–00	20 – 37
6P2–82119–00	20 – 28
69J–82147–00	26 – 27
6E5–82148–00	26 – 7
6H1–82148–00	26 – 5
6E5–82149–00	27 – 16
6CB–82151–00	20 – 31
6G1–82151–01	42 – 9
6CB–82151–10	20 – 32
6CB–82151–20	20 – 33
6CB–82151–30	20 – 34
6CB–82151–41	20 – 30
6DA–82170–12	20 – 29
6P2–82310–03	18 – 1
6P2–82314–21	19 – 17
6P2–82316–01	19 – 3
6A0–82317–01	19 – 14
	20 – 20
663–82317–02	17 – 16
6P2–82380–00	10 – 10
6P2–82389–10	3 – 54

PART NO. N° PIECES	REF. NO.
6Y8–82507–00	44 – 10
6Y8–82510–03	44 – 3
703–82510–45	39 – 48
6Y8–82521–11	42 – 6
6Y8–82521–51	42 – 7
	43 – 5
703–82531–00	39 – 51
6K1–82532–00	39 – 50
703–82532–00	44 – 5
703–82540–00	39 – 55
704–82540–30	40 – 10
6P3–82553–00	21 – 18
6Y8–82553–31	42 – 5
6P2–82554–00	23 – 23
682–82556–00	39 – 53
	44 – 7
6P2–82560–01	3 – 51
69J–82563–01	21 – 17
703–82563–21	39 – 57
704–82563–70	40 – 35
704–82563–80	40 – 61
704–82563–90	40 – 66
6Y8–82570–05	44 – 1
6Y8–82571–01	44 – 2
6K1–82575–01	44 – 6
688–82575–02	39 – 52
703–82577–00	39 – 49
676–82577–01	44 – 4
6P2–8257V–00	17 – 4
64D–82581–00	44 – 11
6AW–82582–00	21 – 6
6DA–82582–00	21 – 4
6Y8–82582–01	43 – 3
6DA–82582–10	21 – 5
6Y8–82582–11	21 – 2
	42 – 10
	43 – 4
69J–82587–01	21 – 21
6E5–82588–00	23 – 19
61A–82588–01	25 – 16
6P2–82588–01	3 – 53
6P2–82589–10	21 – 9
6P2–8258A–00	10 – 23
61B–8258A–02	44 – 20
688–8258A–20	39 – 54
6K1–8258A–41	44 – 19
704–82590–10	40 – 63
6P2–82590–72	21 – 1

PART NO. N° PIECES	REF. NO.
703–82591–00	39 – 59
703–82592–00	39 – 60
6P2–82594–00	23 – 57
704–82594–00	40 – 34
6EM–82599–00	21 – 7
69J–8259F–00	25 – 15
60V–8259F–01	25 – 14
6P2–8259M–10	20 – 42
6R5–83383–00	44 – 8
703–83383–11	39 – 56
6YM–83512–00	41 – 5
6YM–83553–00	42 – 11
6Y8–83553–02	42 – 8
6E5–83558–00	30 – 39
6YD–8356N–00	42 – 1
6P2–83597–00	3 – 56
69J–83614–10	21 – 22
6AW–83651–01	3 – 55
6P2–83652–00	47 – 3
6AW–8366B–10	45 – 2
	46 – 2
63P–8366C–00	45 – 3
	46 – 3
60V–8366D–00	45 – 5
69J–8366G–02	23 – 52
69J–83672–12	27 – 1
6YM–83710–17	41 – 1
6YM–83956–00	41 – 3
6YD–83957–00	41 – 4
6P2–85075–00	18 – 6
	18 – 9
6Y8–85371–01	42 – 3
	43 – 2
6CB–85544–10	20 – 35
689–85547–01	15 – 1
6P2–85580–00	17 – 6
6P2–85722–00	21 – 13
6P2–85780–01	3 – 57
61A–85790–01	18 – 3
63P–85886–00	8 – 31
6P2–85896–00	18 – 5
6P2–85897–00	18 – 8
6AL–8591A–33	19 – 1
6AS–8591A–33	19 – 1
6C5–86120–00	10 – 20
6CB–86120–00	6 – 19
6YM–87278–00	41 – 6
6P2–8A410–02	25 – 37

PART NO. N° PIECES	REF. NO.
63P–8A4L0–12	46 – 1
63P–8A4L2–07	45 – 1
K0F–A3741–00	7 – 5
K0F–A3742–00	7 – 6
K0F–A3743–00	7 – 3
K0F–A3751–00	7 – 8
K0F–A3751–10	7 – 8
K0F–A3751–20	7 – 8
K0F–A3751–30	7 – 8
K0F–A3751–40	7 – 8
K0F–A3751–50	7 – 8
K0F–A3751–60	7 – 8
K0F–A3751–70	7 – 8
K0F–A3751–80	7 – 8
K0F–A3751–90	7 – 8
K0F–A3751–A0	7 – 8
K0F–A3751–B0	7 – 8
K0F–A3751–C0	7 – 8
K0F–A3751–D0	7 – 8
K0F–A3751–E0	7 – 8
K0F–A3751–F0	7 – 8
K0F–A3751–G0	7 – 8
K0F–A3751–H0	7 – 8
K0F–A3751–J0	7 – 8
K0F–A3751–K0	7 – 8
K0F–A3751–L0	7 – 8
K0F–A3751–M0	7 – 8
K0F–A3751–N0	7 – 8
K0F–A3751–P0	7 – 8
K0F–A3751–R0	7 – 8
K0F–A3751–S0	7 – 8
K0F–A3751–T0	7 – 8
K0F–A3753–00	7 – 8
K0F–A3753–10	7 – 8
K0F–A3753–20	7 – 8
K0F–A3753–30	7 – 8
K0F–A3753–40	7 – 8
K0F–A3753–50	7 – 8
K0F–A3753–60	7 – 8
K0F–A3753–70	7 – 8
6P2–W0001–04	48 – 1
6P2–W0001–24	49 – 1
61A–W0078–A4	1 – 20
	49 – 26
6P2–W009A–07–9S	5 – 1
6P2–W009C–07–9S	5 – 9
90101–09M70	37 – 9
90101–12065	26 – 42

PART NO. N° PIECES	REF. NO.
90101–12065	26 – 42
90101–12066	26 – 42
90101–14002	27 – 17
90101–14003	27 – 27
90105–05012	3 – 25
	3 – 62
90105–06035	6 – 21
90105–06M07	5 – 19
90105–06M09	3 – 14
	6 – 18
90105–08049	32 – 69
	34 – 74
90105–10M00	33 – 13
	35 – 13
90109–06M80	3 – 23
	3 – 60
90109–06M81	23 – 20
	45 – 6
90109–06M82	23 – 5
	23 – 29
	23 – 38
	23 – 49
90109–06M86	21 – 23
	23 – 22
	23 – 24
	23 – 46
	23 – 53
	23 – 58
	25 – 2
90109–06MA1	17 – 18
90109–08019	25 – 12
90110–06038	8 – 5
90110–06150	5 – 39
	5 – 44
90111–06142	24 – 5
90111–06144	24 – 4
	24 – 9
90116–10012	30 – 52
90116–10027	3 – 12
90119–06025	3 – 48
90119–06027	6 – 13
90119–06286	32 – 14
	34 – 16
90119–06289	10 – 16
	19 – 16
90119–06294	20 – 22
90119–06296	12 – 11
90119–06297	25 – 40

PART NO. N° PIECES	REF. NO.
90119–06299	8 – 10
90119–06309	15 – 13
	30 – 44
90119–06311	8 – 24
90119–06M92	19 – 19
90119–06MA3	20 – 6
90119–06MA4	3 – 19
90119–06MA5	20 – 7
90119–06MA6	8 – 12
90119–07001	5 – 7
90119–07234	5 – 8
	5 – 15
90119–07235	5 – 14
90119–08009	3 – 11
90119–08021	5 – 26
	5 – 31
90119–08182	30 – 2
90119–08187	23 – 10
90119–08191	32 – 29
	34 – 31
	49 – 34
90119–08M66	3 – 7
90119–08M91	5 – 25
	5 – 30
90119–10007	30 – 30
90119–10008	33 – 6
90119–10009	30 – 55
90119–10024	26 – 24
	27 – 22
	27 – 33
90119–10050	7 – 21
90119–10072	33 – 6
	35 – 6
90119–10M07	7 – 28
90149–05M05	44 – 15
90151–06M02	6 – 11
90152–05003	33 – 10
	35 – 10
90155–10009	5 – 24
	5 – 29
90170–09M05	37 – 10
90170–14M06	37 – 6
90170–16M19	32 – 44
	34 – 46
90171–18M04	33 – 21
	35 – 21
90173–06001	24 – 2
90179–08003	22 – 28

PART NO. N° PIECES	REF. NO.
90179–24002	17 – 12
90183–02M03	32 – 57
	34 – 59
90185–05002	33 – 11
	35 – 11
90185–09M01	36 – 6
	37 – 11
90185–14M00	27 – 19
	27 – 28
90185–22M11	26 – 20
90201–02M00	32 – 56
	34 – 58
90201–06068	23 – 36
	23 – 44
90201–08023	32 – 70
	34 – 75
90201–09M02	25 – 35
90201–10M01	7 – 29
90201–10M20	36 – 7
90201–10M76	37 – 8
90201–12426	26 – 44
90201–13M01	26 – 43
90201–15M58	27 – 18
90201–16015	27 – 24
90201–16016	27 – 15
90201–16M00	32 – 43
	34 – 45
90201–186F1	6 – 15
	48 – 9
90201–24014	17 – 11
90201–26M59	26 – 19
90201–40M00	27 – 6
90201–42014	32 – 36
	34 – 38
90202–08M20	25 – 23
90202–28M46	27 – 25
90202–32M19	27 – 14
90202–40M47	27 – 9
90206–15M18	23 – 33
	23 – 41
90249–06M19	26 – 34
90269–05005	23 – 51
90280–04M05	32 – 25
	34 – 27
	49 – 35
90280–05015	17 – 10
90340–08002	32 – 7
	34 – 9

PART NO. N° PIECES	REF. NO.
90340–14M06	31 – 6
	47 – 1
90340–18M09	6 – 14
90344–51019	5 – 4
	5 – 12
90386–06M12	25 – 25
90386–10M16	26 – 32
90386–12069	25 – 11
90386–15M73	23 – 32
	23 – 40
90386–18M14	26 – 40
	28 – 24
90386–18M63	26 – 39
90386–25M31	26 – 18
90386–39M89	27 – 7
90386–90M90	25 – 34
90387–06037	30 – 11
90387–06044	19 – 18
90387–06119	19 – 15
	20 – 21
90387–06263	31 – 9
90387–06289	10 – 18
	15 – 15
90387–06M26	21 – 10
90387–08M37	23 – 12
90387–10M05	26 – 35
90387–10M61	36 – 3
90430–05002	3 – 26
	3 – 63
	48 – 12
90430–06M03	5 – 20
90430–08003	1 – 18
	32 – 9
	34 – 11
	49 – 15
90430–14115	45 – 4
	46 – 4
	47 – 2
90430–14M09	1 – 17
	31 – 7
	49 – 3
90445–07010	30 – 41
90445–07012	30 – 41
90445–07017	45 – 8
90445–09040	9 – 1
90445–09041	9 – 12
90445–09097	9 – 14
90445–09220	9 – 15

PART NO. N° PIECES	REF. NO.
90445–09224	9 – 13
90445–09304	9 – 32
90445–11028	24 – 17
90445–11182	2 – 17
90445–11699	2 – 16
90445–11M27	2 – 15
90445–11M47	24 – 11
90445–13511	15 – 3
90445–13M25	16 – 3
90446–10M01	9 – 9
90447–07013	45 – 9
90447–13009	24 – 12
90462–08026	20 – 39
90462–08032	18 – 10
90462–20001	23 – 21
90464–06001	3 – 52
	17 – 5
90464–08004	19 – 8
90464–09010	25 – 20
90464–09013	9 – 26
90464–09M47	23 – 25
90464–10M57	21 – 19
90464–12009	14 – 17
	15 – 19
	15 – 22
90464–12010	14 – 15
	15 – 20
90464–12012	14 – 1
90464–12183	19 – 12
	19 – 13
90464–13249	19 – 9
90464–14010	21 – 15
90464–18004	11 – 21
	11 – 22
	20 – 12
	23 – 54
	24 – 20
90464–18005	14 – 16
90464–19M45	19 – 4
	21 – 12
90464–20011	8 – 29
90464–20024	15 – 21
90464–20258	23 – 56
90464–21002	9 – 35
90464–23199	19 – 5
	19 – 11
90464–60067	9 – 10
	9 – 33

PART NO. N° PIECES	REF. NO.
90464–99004	8 – 23
90465–06M86	25 – 19
90465–08M83	26 – 15
	26 – 22
90465–11M10	3 – 58
	8 – 30
	9 – 4
	9 – 11
	9 – 27
	9 – 28
	9 – 29
	9 – 31
	15 – 5
	15 – 18
	15 – 23
	23 – 14
	24 – 18
	25 – 18
	26 – 21
	30 – 40
	45 – 7
90465–11M52	20 – 15
	20 – 18
90465–11M59	3 – 32
90465–13M18	8 – 20
	21 – 16
90465–14M66	19 – 10
	20 – 19
	21 – 8
	21 – 11
90467–08M18	5 – 46
	9 – 30
	9 – 36
	47 – 6
90467–09M03	9 – 5
90467–09M09	9 – 37
90467–140A9	14 – 9
90467–141A2	14 – 6
90468–18008	25 – 6
	25 – 24
	25 – 42
90480–06M19	16 – 5
90480–10M23	10 – 17
90480–12314	17 – 17
90480–14018	15 – 14
90480–14M17	24 – 6
90480–22M81	23 – 11
90501–10M77	32 – 58

PART NO. N° PIECES	REF. NO.
90501–10M77	34 – 60
90501–11M10	32 – 17
	34 – 19
90501–12082	25 – 29
90501–450A2	32 – 38
	34 – 40
90506–16003	26 – 37
90506–18M40	23 – 47
90508–20020	25 – 13
90560–12M01	36 – 4
91318–05025	28 – 59
91318–05040	28 – 64
91490–20015	25 – 36
91490–40030	33 – 22
	35 – 22
91690–30010	25 – 4
	25 – 31
91690–30020	26 – 36
91690–40010	6 – 12
91809–08006	5 – 6
	5 – 13
91814–18002	3 – 4
92780–06020	40 – 29
92903–05100	44 – 13
92903–08100	20 – 47
92990–05100	44 – 17
92990–05300	40 – 37
92990–05600	44 – 18
92990–06100	2 – 6
92990–06300	40 – 48
92990–08600	39 – 38
92990–10600	18 – 4
92990–18200	33 – 20
	35 – 20
92995–10600	30 – 53
92995–14600	27 – 20
	27 – 30
93101–28019	32 – 31
	34 – 33
	49 – 22
93101–30030	32 – 67
	34 – 72
	49 – 24
93102–38008	7 – 23
	48 – 19
93102–63004	4 – 3
	48 – 18
93106–09014	32 – 13

PART NO. N° PIECES	REF. NO.
93106–09014	34 – 15
	49 – 17
93106–19001	28 – 5
93210–064A5	28 – 51
93210–08391	28 – 48
93210–09165	25 – 33
	28 – 72
93210–16275	36 – 9
93210–17239	28 – 22
93210–19MJ1	3 – 39
	48 – 15
93210–19MJ3	8 – 26
	31 – 21
	48 – 22
93210–24M79	3 – 50
	48 – 23
93210–25552	3 – 38
	31 – 18
	48 – 14
93210–25647	3 – 41
	48 – 16
93210–28543	30 – 9
	49 – 6
93210–347A1	30 – 8
	49 – 5
93210–35321	27 – 8
93210–37160	32 – 21
	34 – 23
	49 – 19
	49 – 29
93210–55M14	32 – 37
	34 – 39
	49 – 23
93210–64488	32 – 12
	34 – 14
	49 – 16
93210–66001	28 – 69
93210–86M38	32 – 20
	34 – 22
	49 – 18
	49 – 28
93211–04384	32 – 68
	34 – 73
	49 – 25
93306–210U0	32 – 62
93311–83280	32 – 3
	34 – 3
93315–43064	32 – 66

PART NO. N° PIECES	REF. NO.
93315–43064	34 – 71
93315–660W3	34 – 5
93317–330U2	32 – 32
	34 – 34
93317–62891	32 – 46
	34 – 48
93332–00048	34 – 64
93332–000W1	32 – 4
93341–34019	32 – 35
	34 – 37
93341–440U5	34 – 66
93341–670V0	34 – 6
93341–93020	32 – 34
	34 – 36
93410–18M05	26 – 41
93410–37M04	27 – 11
93420–36M01	30 – 36
93430–06024	39 – 12
	40 – 6
93450–37097	32 – 47
	34 – 49
93501–04011	32 – 59
	34 – 61
93501–04M02	25 – 28
93501–08001	28 – 47
93503–16003	28 – 37
93505–32038	28 – 13
	28 – 34
93604–35236	28 – 60
93605–10108	7 – 10
	7 – 12
	7 – 14
	7 – 16
93606–12019	3 – 3
	3 – 10
	30 – 43
	32 – 28
	34 – 30
	49 – 33
93606–19M23	30 – 24
93608–12M05	30 – 50
	33 – 4
	35 – 4
93608–16M16	30 – 5
	30 – 14
	30 – 31
	31 – 5
93700–06002	26 – 14

PART NO. N° PIECES	REF. NO.
93700–06002	26 – 26
93700–06M01	25 – 10
93700–09M00	32 – 71
	34 – 76
94702–00400	1 – 6
	5 – 47
95303–05700	44 – 14
95333–08600	20 – 46
95380–05600	39 – 9
	40 – 22
	44 – 16
95380–06600	2 – 7
	39 – 43
	40 – 38
95380–10600	30 – 54
95380–12600	26 – 45
95380–14700	37 – 7
95780–10300	27 – 4
95812–06025	31 – 11
95D95–06010	30 – 38
95D95–06016	31 – 22
97003–05012	44 – 12
97380–05025	39 – 10
97380–06018	40 – 19
97380–08030	39 – 37
97513–06525	20 – 25
97513–08545	22 – 27
97585–06510	26 – 23
97602–04306	29 – 7
97602–04308	29 – 11
97607–04208	5 – 35
97780–50620	20 – 38
97780–60520	24 – 19
97885–06010	26 – 10
	26 – 13
97890–05016	40 – 73
97890–05025	40 – 15
97890–06018	40 – 47
97980–05312	17 – 7
97980–06216	30 – 46
97985–04116	25 – 17
97985–06210	17 – 14
97985–06212	26 – 8
	26 – 16
97985–06216	27 – 2
97D95–06012	30 – 34
97D95–06020	23 – 35
	23 – 43

PART NO. N° PIECES	REF. NO.
97D95–08016	20 – 45
97E75–06516	8 – 7
	8 – 9
97E75–06535	25 – 30
97E75–06540	31 – 17
97E75–08535	30 – 23
	31 – 4
97E75–08540	5 – 21
	8 – 1
	8 – 11
97E75–08560	31 – 3
97E75–08590	30 – 17
97E75–10535	30 – 4
97E75–10545	30 – 3
97E95–06510	26 – 6
97E95–06512	18 – 11
	20 – 9
	26 – 29
97E95–06514	15 – 16
97E95–06516	2 – 9
	19 – 7
	20 – 40
	45 – 11
97E95–06520	3 – 42
	18 – 2
	18 – 7
	19 – 2
	30 – 12
97E95–06525	3 – 27
	3 – 36
	26 – 4
97E95–06530	5 – 32
	5 – 37
	5 – 42
	47 – 4
97E95–06535	21 – 14
	25 – 8
97E95–06610	20 – 24
97E95–06616	20 – 27
	20 – 41
97E95–06620	8 – 27
97E95–06635	17 – 9
97E95–08516	20 – 16
97E95–08520	20 – 14
	32 – 73
	34 – 78
97E95–08525	32 – 40
	34 – 42

PART NO. N° PIECES	REF. NO.
97E95–10645	33 – 5
	35 – 5
98507–04008	13 – 35
98580–04006	39 – 40
98780–04015	20 – 11
98780–04016	3 – 17
	6 – 10
98780–05018	40 – 32
99001–08600	32 – 16
	34 – 18
99002–03600	28 – 40
99530–08012	17 – 8
99530–10114	8 – 2
99530–14016	5 – 23
	5 – 28
	7 – 27
99590–10114	32 – 61
	34 – 63

PART NO. N° PIECES	REF. NO.

PART NO. N° PIECES	REF. NO.

PART NO. N° PIECES	REF. NO.