YAMAHA

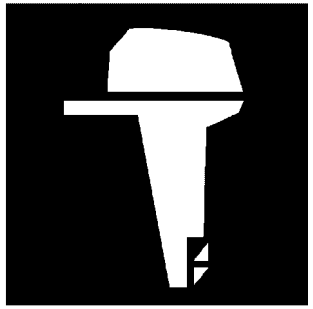

PARTS CATALOGUE
CATALOGUE DE PIECES DETACHEES

XF450

YAMAHA
GENUINE
Parts & Accessories

1Y6LB-300FA

( )

XF400/XF450
PARTS CATALOGUE
©2024 by Yamaha Motor Co., Ltd.
1st edition, June 2024
All rights reserved.
Any reprinting or unauthorized use
without the written permission of
Yamaha Motor Co., Ltd.
is expressly prohibited.
Printed in Japan.

XF400/XF450
CATALOGUE DE PIECES DETACHEES
©2024 par Yamaha Motor Co., Ltd.
1re édition, juin 2024
Tous droits réservés
Toute réimpression ou utilisation
non autorisée sans la permission écrite
de Yamaha Motor Co., Ltd.
est formellement interdite.
Imprimé au Japon

FOREWORD

This Parts Catalogue is related to the parts for the model(s) on the cover page. When you are ordering replacement parts, please refer to this Parts Catalogue and quote both part numbers and part names correctly.

1. Modifications or additions which have been made after the issue of the Parts Catalogue will be announced in the Parts News.
   It is advisable that you make the necessary corrections to the Parts Catalogue according to the Parts News.

2. Abbreviations
   The following abbreviations are used in this Parts Catalogue.
   "UR" Use specified parts number.
   "UN" Use as many as needed.
   "AP" Alternate Parts
   "LM" Locally Made (Parts need to be ordered locally)
   "F#" Frame No. (Applicable machine No.)
   "O/S" Over Size

3. The number of components for assembly
   - Parts, which are to be supplied in an assembly, are listed with a dot (.) in front of the part name as shown below.
   - The numeral appearing to the right of each component part indicates the quantity of parts for each assembly unit.

PART NO.	DESCRIPTION	Q'TY	REMARKS
2F5–83310–60	FRONT FLASHER LIGHT ASSY	2	
115–83311–60	.BULB (6V–18W)	1	

4. Applicable colours of graphics are represented in the "REMARKS" as shown below.

PART NO.	DESCRIPTION	Q'TY	REMARKS
2N4–24110–00–X5	FUEL TANK COMP.	2	MXR
3J1–24240–10	.GRAPHIC, FUEL TANK	1	FOR MXR

5. Note that the illustrations for reference in finding parts numbers are not to be used for assembling. When assembling, please use the applicable service manual.

6. The asterisk (*) before a reference number indicates modified items after the first edition.

7. Applicable Serial No.
   Engine Serial No.

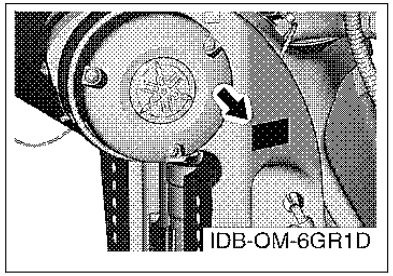

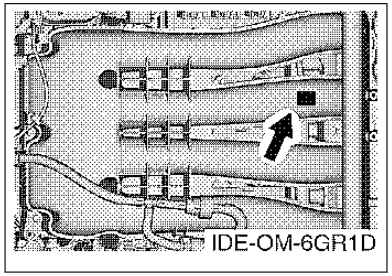

8. Applicable Engine Starting Serial No.

Model	Serial No.	Model	Serial No.
XF450	6KN-1002408	XF400	6LB-1000055

9. Applicable Colour Code

Abbreviation	Colour Name	Colour Code
DBN1	DARK BLUISH GRAY 1	008D
WPA	WHITE PEARL A	00CE

10. Quantity Column Information

Column No.	Name Of Q'ty Column	Applicable Model
1	6KN3	XF450NSA, XF450NSA2
2	6LB3	XF400NSA, XF400NSA2

AVANT–PROPOS

Ce catalogue de pièces détachées concerne les pièces pour le(s) modèle(s) indiqué(s) sur la page de couverture. Lorsque vous commandez des pièces de rechange, veuillez vous référer à ce catalogue de pieces détachées et indiquer clairement les numéros et les noms des pièces détachées.

1. Les modifications ou ajouts ayant été effectués après la parution du catalogue de pièces détachées seront décrits dans les Bulletins d'information concernant les pièces détachées.
   Il est recommandé que vous apportiez les corrections nécessaires au catalogue des pièces détachées en vous référant aux Bulletins d'information.

2. Abréviations
   Dans ce catalogue, les abréviations suivantes sont utilisées:
   "UR" Utiliser le numéro de pièces spécifié.
   "UN" Utiliser autant que nécessaire.
   "AP" Pièces de substitution
   "LM" Fabrication locale (les pièces doivent être commandées localement.)
   "F#" N° de cadre (applicable au N° de série)
   "O/S" Surdimensionné

3. Nombre de pièces d'un assemblage
   - Les pièces fournies comme composants d'un assemblage sont précédées d'un point (.) de la manière indiquée ci–dessous.
   - Le chiffre apparaissant à la droite de chaque composant indique la quantité de pièces pour chaque unité d'assemblage.

N° PIECES	DESCRIPTION	QTE	REMARQUES
2F5–83310–60	ENS. CLIGNOTANT AVANT	2	
115–83311–60	.AMPOULE (6V–18W)	1	

4. Les couleurs concernant les graphiques sont indiquées dans la colonne "REMARQUES", comme indiqué ci–dessous.

N° PIECES	DESCRIPTION	QTE	REMARQUES
2N4–24110–00–X5	RESERVOIR A ESSENCE.	2	MXR
3J1–24240–10	.GRAPHIQUE	1	POUR MXR

5. Veuillez noter que les illustrations sont indiquées à titre de référence pour trouver les numéros de pièces, non pour être utilisées lors de l'assemblage. Lors de l'assemblage, veuillez utiliser le manuel d'entretien adéquat.

6. L'astérisque (*) placé devant un numéro de référence indique des éléments qui ont été modifiés après la première édition.

7. N° de série applicable
   N° de Série du moteur

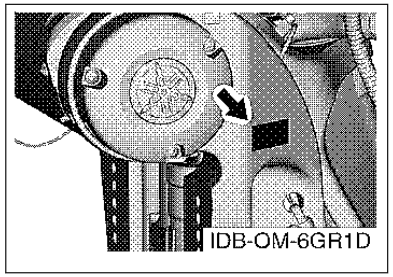

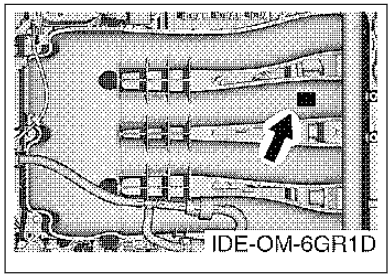

8. N° de série initial du moteur applicable

Modèle	N° de série	Modèle	N° de série
XF450	6KN-1002408	XF400	6LB-1000055

9. Code couleur applicable

Abréviation	Nom de la couleur	Code couleur
DBN1	DARK BLUISH GRAY 1	008D
WPA	WHITE PEARL A	00CE

10. Informations relatives à la colonne Quantité

N° de la colonne	Nom de la colonne Qté	Modèle applicable
1	6KN3	XF450NSA, XF450NSA2
2	6LB3	XF400NSA, XF400NSA2

CONTENTS

SCHEDULED SERVICE PARTS....1
TOP COWLING....2
CYLINDER & CRANKCASE 1....4
CRANKSHAFT & PISTON....6
CYLINDER & CRANKCASE 2....8
CYLINDER & CRANKCASE 3....10
CYLINDER & CRANKCASE 4....11
VALVE 1....12
VALVE 2....14
INTAKE....15
THROTTLE BODY ASSY....16
OIL PUMP....17
EXHAUST 1....18
EXHAUST 2....19
VAPOR SEPARATOR....21
FUEL 1....22
FUEL 2....24
FUEL 3....25
FUEL 4....27
GENERATOR....28
ELECTRICAL 1....30
ELECTRICAL 2....32
ELECTRICAL 3....34
ELECTRICAL 4....35
ELECTRICAL 5....37
ELECTRICAL 6....38
ELECTRICAL 7....39
STARTING MOTOR....40
BOTTOM COWLING 1....41
BOTTOM COWLING 2....43
BOTTOM COWLING 3....45
BOTTOM COWLING 4....46
GRAPHIC & TOOL....47
CONTROL....48
BRACKET 1....49
BRACKET 2....51
BRACKET 3....53
POWER TRIM & TILT ASSY 1....55
POWER TRIM & TILT ASSY 2....57
UPPER CASING 1....59
UPPER CASING 2....61
UPPER CASING 3....63
OIL PAN....64
LOWER CASING & DRIVE 1....66
LOWER CASING & DRIVE 2....69
LOWER CASING & DRIVE 3....72
LOWER CASING & DRIVE 4....74
LOWER CASING & DRIVE 5....77
LOWER CASING & DRIVE 6....80
OPTIONAL PARTS 1....82
OPTIONAL PARTS 2....83
REPAIR KIT 1....84
REPAIR KIT 2....85

INDEX

NUMERICAL INDEX....87

TABLE DES MATIERES

PIECES MAINTENANCE PERIODIQUE.....1
CAPOT SUPERIEUR..... 2
CYLINDRE & CARTER 1..... 4
VILEBREQUIN & PISTON.....6
CYLINDRE & CARTER 2..... 8
CYLINDRE & CARTER 3..... 10
CYLINDRE & CARTER 4..... 11
SOUPAPE 1..... 12
SOUPAPE 2..... 14
ADMISSION.....15
CARTER D'ACCELERATEUR.....16
POMPE A HUILE.....17
ECHAPPEMENT 1..... 18
ECHAPPEMENT 2..... 19
VAPEUR SEPARATEUR.....21
CARBURANT 1..... 22
CARBURANT 2..... 24
CARBURANT 3..... 25
CARBURANT 4..... 27
GENERATRICE.....28
PARTIE ELECTRIQUE 1.....30
PARTIE ELECTRIQUE 2.....32
PARTIE ELECTRIQUE 3.....34
PARTIE ELECTRIQUE 4.....35
PARTIE ELECTRIQUE 5.....37
PARTIE ELECTRIQUE 6.....38
PARTIE ELECTRIQUE 7.....39
DEMARREUR ELECTRIQUE.....40
CAPOT INFERIEUR 1.....41
CAPOT INFERIEUR 2.....43
CAPOT INFERIEUR 3.....45
CAPOT INFERIEUR 4.....46
GRAPHIQUE & OUTIL..... 47
COMMANDE..... 48
SUPPORT 1..... 49
SUPPORT 2..... 51
SUPPORT 3..... 53
PUISSANCE PARER ET INCLINER 1..... 55
PUISSANCE PARER ET INCLINER 2..... 57
FOURREAU 1.....59
FOURREAU 2.....61
FOURREAU 3.....63
VENTILATEUR D'HUILE..... 64
BOITIER D'HELICE TRANSMISSION1.....66
BOITIER D'HELICE TRANSMISSION2.....69
BOITIER D'HELICE TRANSMISSION3.....72
BOITIER D'HELICE TRANSMISSION4.....74
BOITIER D'HELICE TRANSMISSION5.....77
BOITIER D'HELICE TRANSMISSION6.....80
PIECES OPTIONNELLES 1..... 82
PIECES OPTIONNELLES 2..... 83
KITS DE REPARATION 1..... 84
KITS DE REPARATION 2..... 85

INDEX

INDEX NUMERIQUE.....87

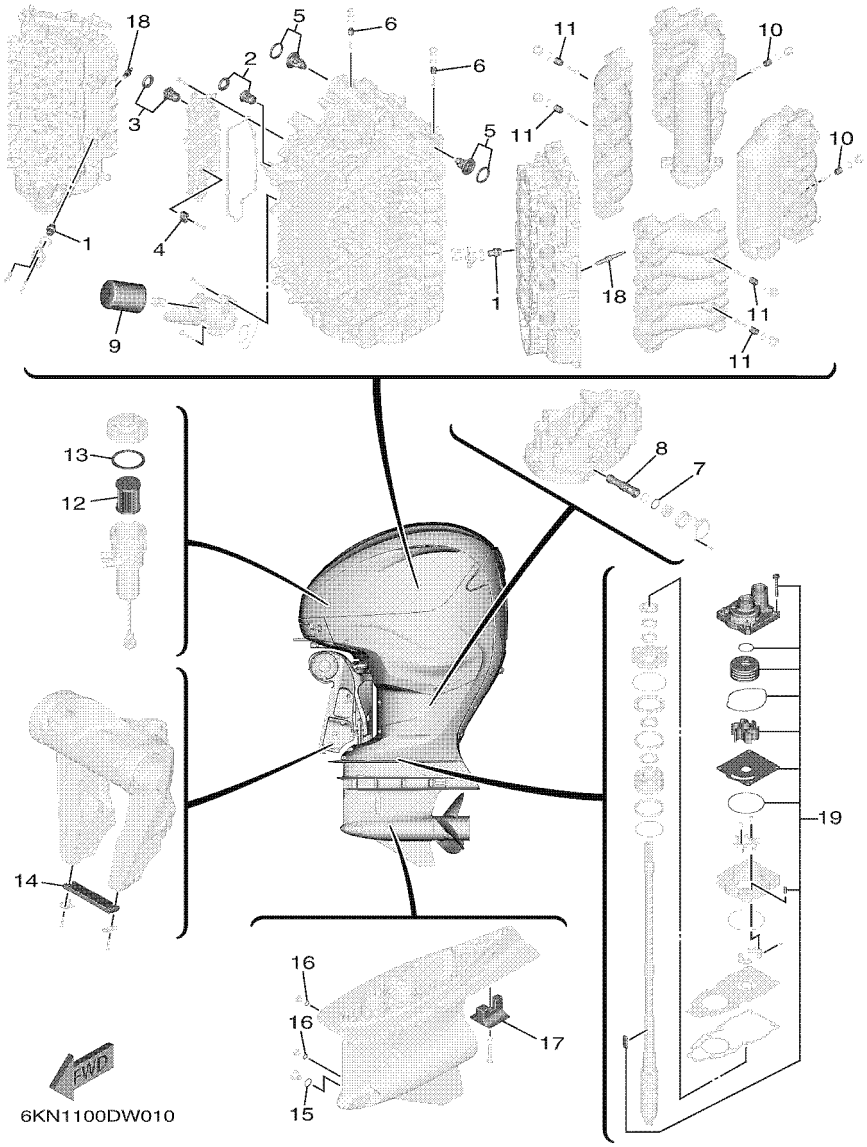

FIG. 1 SCHEDULED SERVICE PARTS — PIECES MAINTENANCE PERIODIQUE

REF. NO.	PART NO. N° PIECES	DESCRIPTION DESCRIPTION	6KN3	6LB3				REMARKS REMARQUES
1	6ML–11325–00	ANODE ANODE	4	4				
2	6H3–12411–20	THERMOSTAT THERMOSTAT	1	1				
3	66M–12411–01	THERMOSTAT THERMOSTAT	1	1				
4	6AW–1132P–00	ANODE 5 ANODE 5	3	3				
5	6GR–12411–00	THERMOSTAT THERMOSTAT	2	2				
6	6G8–11325–00	ANODE ANODE	2	2				
7	93210–34633	O-RING JOINT TORIQUE	1	1				
8	6GR–13411–00	STRAINER, OIL FILTRE, HUILE	1	1				
9	N26–13440–03	ELEMENT ASSY, OIL CLEANER ELEMENT, FILTRE A HUILE	1	1				
10	6G8–11325–00	ANODE ANODE	2	2				
11	6G8–11325–00	ANODE ANODE	4	4				
12	6P3–24563–02	ELEMENT, FILTER ELEMENT, FILTRE	1	1				
13	6P3–24564–00	GASKET JOINT	1	1				
14	6AW–45251–00	ANODE ANODE	1	1				
15	93210–19123	O-RING JOINT TORIQUE	1	1				
16	93210–09165	O-RING JOINT TORIQUE	2	2				
17	6AW–45373–00	ANODE ANODE	1	1				
18	94702–00447	PLUG, SPARK (NGK ILMAR7H9) BOUGIE D,ALLUMAGE (NGK ILMAR7H	8	8				
19	6GR–W0078–01	WATER PUMP REPAIR KIT KIT DE REPARATION DE LA POMPE	1	1				

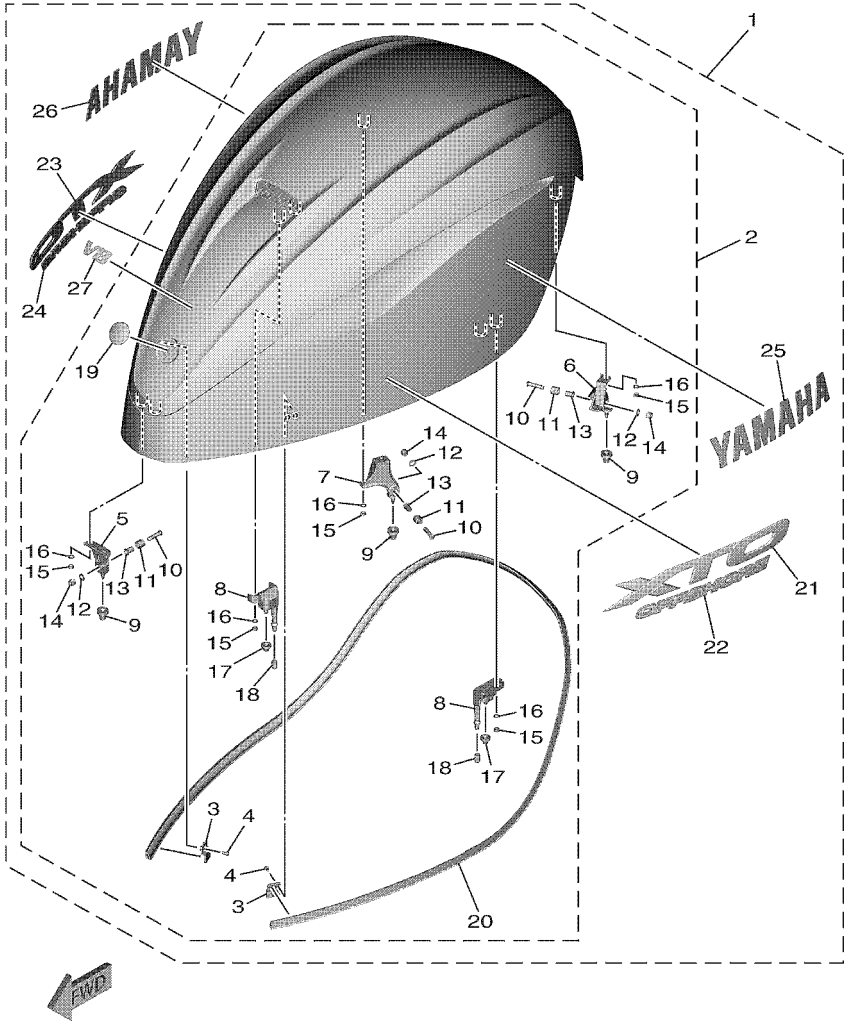

6KN1100DW020

FIG. 2 TOP COWLING — CAPOT SUPERIEUR

REF. NO.	PART NO. N° PIECES	DESCRIPTION DESCRIPTION	6KN3	6LB3				REMARKS REMARQUES
1	6KN–42610–00–8D	TOP COWLING ASSY CAPOT (ENS.)	1	1				UR GRAY UR GRAY
	6KN–42610–00–CE	TOP COWLING ASSY CAPOT (ENS.)	1	1				UR WHITE UR WHITE
2	6KN–4261A–00–8D	.TOP COWLING W/O GRAPHICS .CAPOT SUPERIEUR SANS GRAPHIQUE	1	1				UR GRAY UR GRAY
	6KN–4261A–00–CE	.TOP COWLING W/O GRAPHICS .CAPOT SUPERIEUR SANS GRAPHIQUE	1	1				UR WHITE UR WHITE
3	6GR–42477–00	..PLATE, LOCK ..PLAQUE BUTEE	2	2				
4	97985–05210	..SCREW, WITH WASHER ..VIS, AVEC RONDELLE	4	4				
5	6GR–42647–00	..HOLDER, CLAMP BAND ..SUPPORT, SANDOW DE SERRAGE	1	1				
6	6GR–42648–00	..HOLDER, CLAMP BAND ..SUPPORT, SANDOW DE SERRAGE	1	1				
7	6GR–42649–00	..HOLDER, CLAMP BAND ..SUPPORT, SANDOW DE SERRAGE	1	1				
8	6GR–42643–00	..PLATE, CLAMP ..PLAQUE, PRESSE	2	2				
9	6AW–42663–01	..DAMPER 2 ..AMORTISSEUR 2	3	3				
10	90111–08078	..BOLT, HEXAGON SOCKET BUTTON ..BOULON	3	3				
11	90387–10094	..COLLAR ..COLLERETTE	3	3				
12	92990–08600	..WASHER, PLATE ..RONDELLE, PLATE	3	3				
13	90387–08M45	..COLLAR ..COLLERETTE	3	3				
14	95780–08300	..NUT, FLANGE ..ECROU	3	3				
15	95380–06600	..NUT, HEXAGON ..ECROU	10	10				
16	92990–06100	..WASHER, SPRING ..RONDELLE, GROWER	10	10				
17	663–42662–01	..DAMPER ..AMORTISSEUR	2	2				
18	67F–13448–00	..CAP ..CAPUCHON	2	2				
19	6LB–42697–00	..TUNING FORK MARK ..MARQUE, YAMAHA	1	1				
20	6KN–42629–00	..SEAL ..JOINT	1	1				
21	6KN–42675–00	.GRAPHIC, SIDE 1 .EMBLEME	1	1				
22	6KN–53184–00	.GRAPHIC, 1 .GRAPHIQUE, 1	1	1				
23	6KN–42676–00	.GRAPHIC, SIDE 2 .EMBLEME	1	1				
24	6KN–53185–00	.GRAPHIC, 2 .GRAPHIQUE, 2	1	1				
25	6KN–2153A–00	.EMBLEM, YAMAHA .EMBLEME, YAMAHA	1	1				

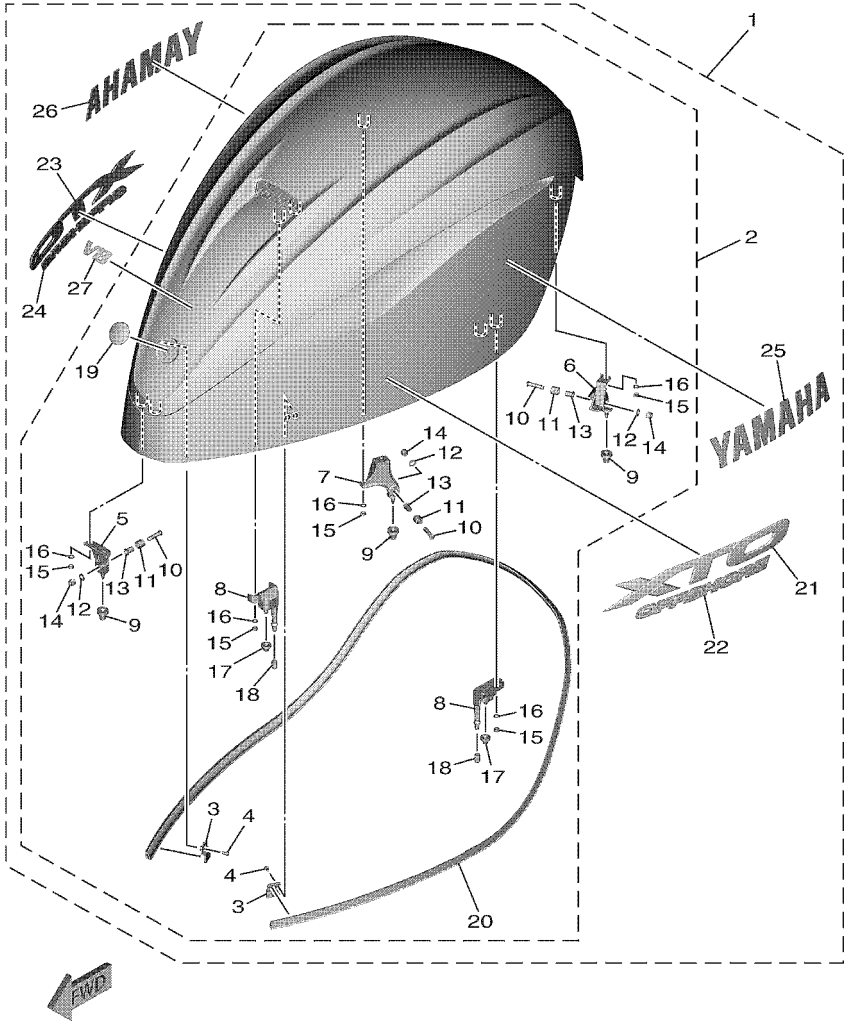

6KN1100DW020

FIG. 2 TOP COWLING — CAPOT SUPERIEUR

REF. NO.	PART NO. N° PIECES	DESCRIPTION DESCRIPTION	6KN3	6LB3				REMARKS REMARQUES
26	6KN–2153B–00	.EMBLEM, YAMAHA .EMBLEME, YAMAHA	1	1				
27	6GR–42677–00	.GRAPHIC, FRONT .ADHESIF, AVANT	1	1				

FIG. 3 CYLINDER & CRANKCASE 1 — CYLINDRE & CARTER 1

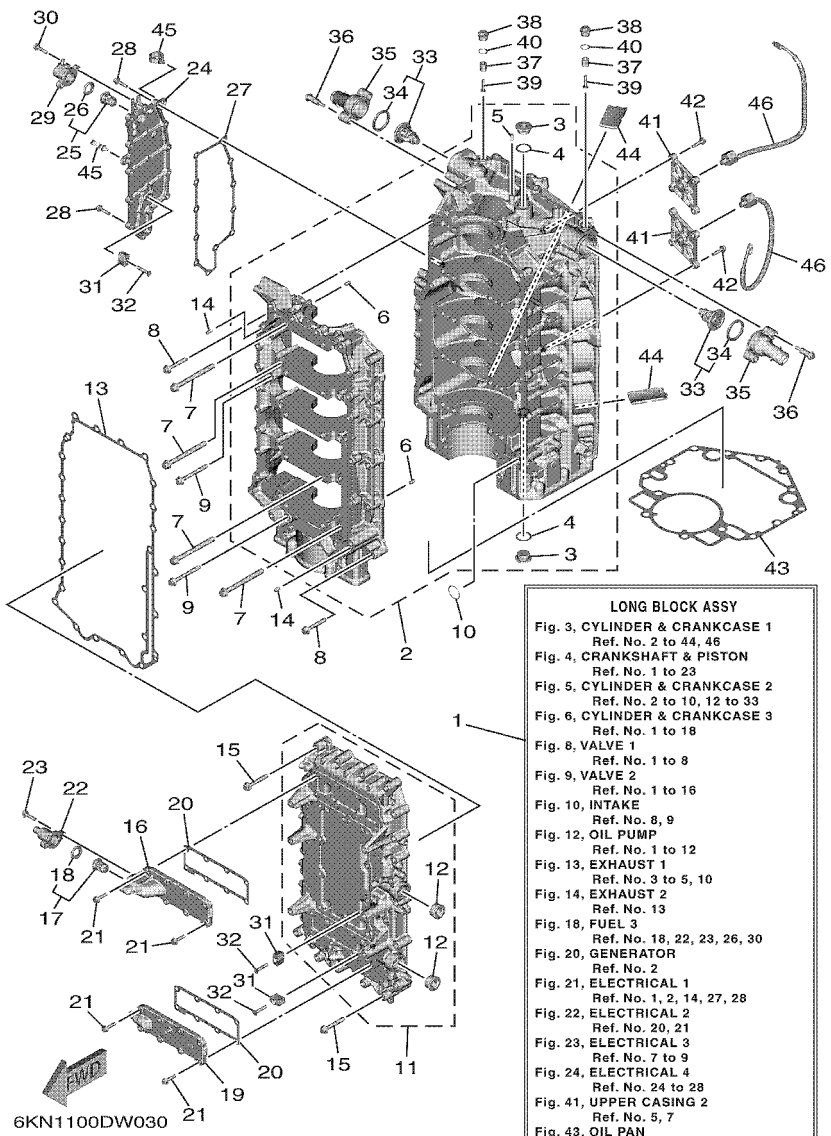

REF. NO.	PART NO. N° PIECES	DESCRIPTION DESCRIPTION	6KN3	6LB3				REMARKS REMARQUES
1	6KN–11000–00	LONG BLOCK ASSY SOUS-ASSEMBLEE DU MOTEUR	1	1				
2	6KN–15109–00–9S	CRANKCASE ASSY CARTER DE MOTEUR COMPLET	1	1				
3	90340–24001	.PLUG, STRAIGHT SCREW .PLOT, FILETE DROIT	2	2				
4	90430–24239	.GASKET .JOINT	2	2				
5	93606–12019	.PIN, DOWEL .GOUPILLE	1	1				
6	93606–12019	.PIN, DOWEL .GOUPILLE	10	10				
7	6P2–15187–00	BOLT BOULON	20	20				
8	90105–08175	BOLT, FLANGE BOULON, A COLLERETTE	10	10				
9	90105–08220	BOLT, FLANGE BOULON, A COLLERETTE	6	6				
10	93210–26658	O-RING JOINT TORIQUE	1	1				
11	6KN–15411–01–9S	COVER, CRANKCASE 1 COUVERCLE 1, CARTER MOTEUR	1	1				
12	90340–27001	.PLUG, STRAIGHT SCREW .PLOT, FILETE DROIT	2	2				
13	6GR–15451–01	GASKET, CRANKCASE COVER 1 JOINT, COUVERCLE DE CARTER 1	1	1				
14	93606–12019	PIN, DOWEL GOUPILLE	2	2				
15	90105–08175	BOLT, FLANGE BOULON, A COLLERETTE	26	26				
16	6GR–15414–01–9S	COVER 1 COUVERCLE 1	1	1				
17	6H3–12411–20	THERMOSTAT THERMOSTAT	1	1				
18	6H3–12412–10	.SEAL, THERMOSTAT .JOINT, THERMOSTAT	1	1				
19	6GR–15423–00–9S	COVER 2 COUVERCLE 2	1	1				
20	6GR–1131B–00	GASKET, COVER JOINT, COUVERCLE	2	2				
21	90105–06037	BOLT, FLANGE BOULON, A COLLERETTE	16	16				
22	6KN–12417–00–9S	HOUSING, THERMOSTAT BOITIER, THERMOSTAT	1	1				
23	90105–06037	BOLT, FLANGE BOULON, A COLLERETTE	2	2				
24	6GR–15413–00–9S	COVER COUVERCLE	1	1				
25	66M–12411–01	THERMOSTAT THERMOSTAT	1	1				
26	688–12412–00	.SEAL, THERMOSTAT .JOINT, THERMOSTAT	1	1				
27	6GR–15353–00	GASKET, DRAIN JOINT, PLOT DE VIDANGE	1	1				

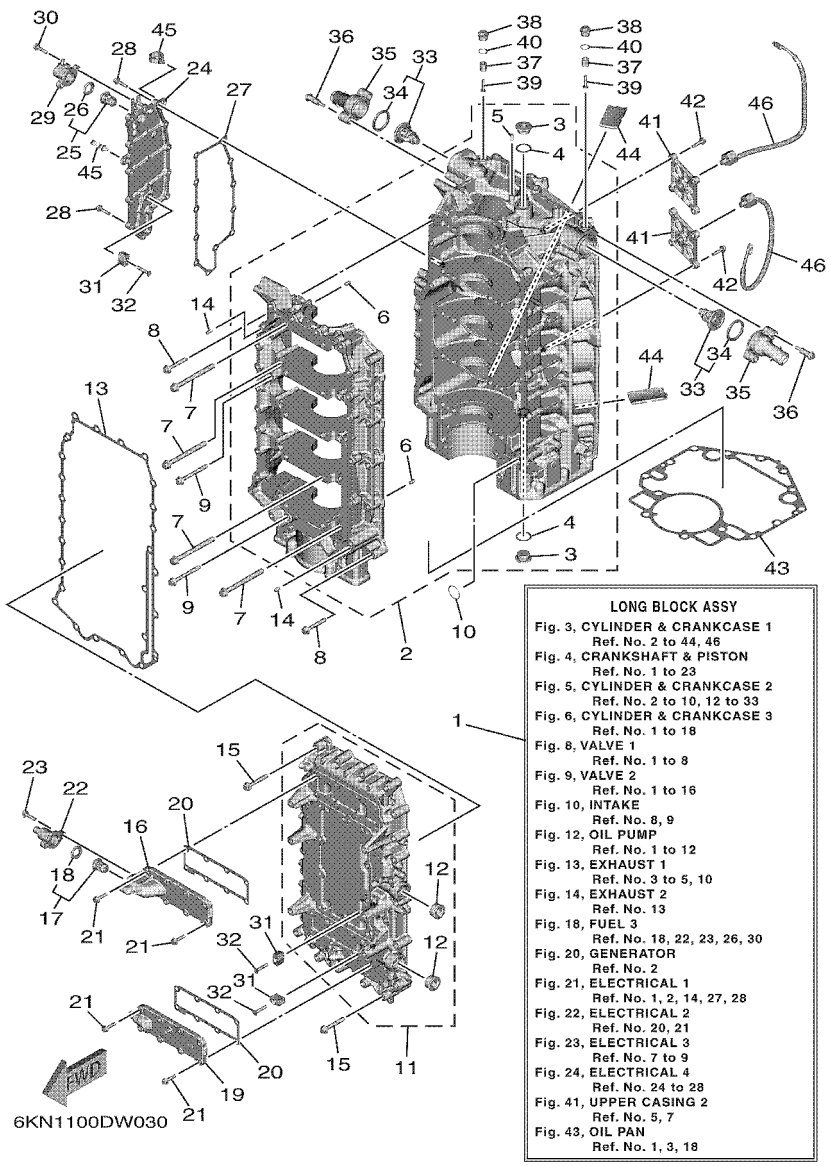

FIG. 3 CYLINDER & CRANKCASE 1 — CYLINDRE & CARTER 1

REF. NO.	PART NO. N° PIECES	DESCRIPTION DESCRIPTION	6KN3	6LB3				REMARKS REMARQUES
28	90105–06037	BOLT, FLANGE BOULON, A COLLERETTE	12	12				
29	6GR–1241B–00–9S	COVER, THERMOSTAT 2 COUVERCLE, THERMOSTAT 2	1	1				
30	90105–06037	BOLT, FLANGE BOULON, A COLLERETTE	2	2				
31	6AW–1132P–00	ANODE 5 ANODE 5	3	3				
32	90151–06069	SCREW, COUNTERSUNK VIS, TETE NOYEE	3	3				
33	6GR–12411–00	THERMOSTAT THERMOSTAT	2	2				
34	6GR–12412–00	.SEAL, THERMOSTAT .JOINT, THERMOSTAT	1	1				
35	6GR–12413–00	COVER, THERMOSTAT COUVERCLE, THERMOSTAT	2	2				
36	90109–06286	BOLT BOULON	4	4				
37	6G8–11325–00	ANODE ANODE	2	2				
38	6G8–11197–A0	PLUG, BLIND PLOT, BORGNE	2	2				
39	98980–05025	SCREW, BIND VIS, DE PRESSION	2	2				
40	93210–13M63	O-RING JOINT TORIQUE	2	2				
41	6GR–1135A–00	BRACKET SUPPORT	2	2				
42	90105–06037	BOLT, FLANGE BOULON, A COLLERETTE	8	8				
43	6GR–11351–01	GASKET, CYLINDER JOINT, D'EMBASE	1	1				
44	6GR–14664–01	GROMMET, WATER SHUT PASSE-FIL	2	2				
45	90464–20181	CLAMP BRIDE	2	2				
46	6CJ–85780–01	SENSOR, KNOCK SONDE DE COGNEMENT	2	2				

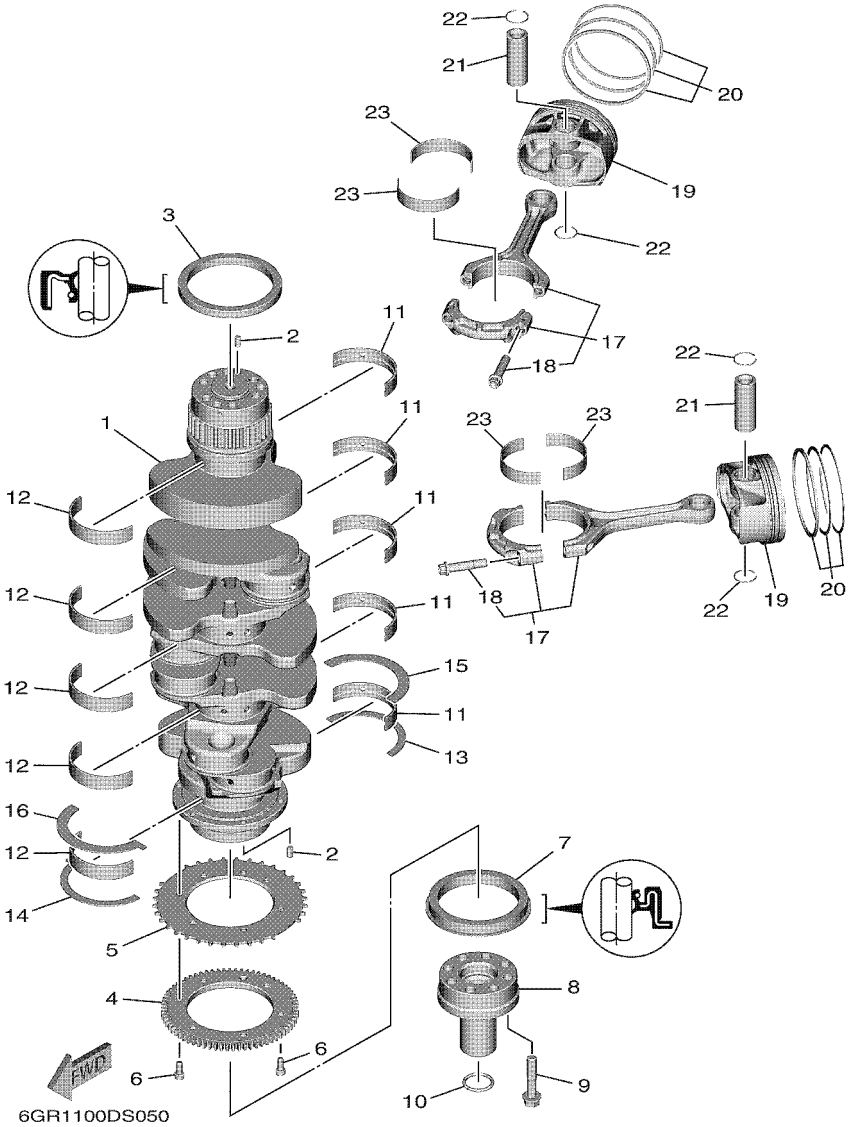

FIG. 4 CRANKSHAFT & PISTON — VILEBREQUIN & PISTON

REF. NO.	PART NO. N° PIECES	DESCRIPTION DESCRIPTION	6KN3	6LB3				REMARKS REMARQUES
1	6GR–11411–01	CRANKSHAFT VILEBREQUIN COMPLET	1	1				
2	93606–12019	PIN, DOWEL GOUPILLE	2	2				
3	93102–90004	OIL SEAL JOINT SPY	1	1				
4	6GR–13188–00	GEAR, DRIVE PIGNON SECONDAIRE	1	1				
5	6GR–81673–00	ROTOR ROTOR	1	1				
6	91317–06014	BOLT, HEXAGON SOCKET HEAD BOULON, TETE HEXAGONALE CREUSE	6	6				
7	93102–85010	OIL SEAL JOINT SPY	1	1				
8	6GR–12199–00	FLANGE COLLERETTE	1	1				
9	90105–10446	BOLT, FLANGE BOULON, A COLLERETTE	8	8				
10	93210–260A5	O-RING JOINT TORIQUE	1	1				
11	6GR–11416–00	PLANE BEARING, CRANKSHAFT 1 COUSSINET DE VILEBREQUIN 1	5	5				UR BLACK UR BLACK
	6GR–11416–10	PLANE BEARING, CRANKSHAFT 1 COUSSINET DE VILEBREQUIN 1	5	5				UR BLUE UR BLUE
	6GR–11416–20	PLANE BEARING, CRANKSHAFT 1 COUSSINET DE VILEBREQUIN 1	5	5				UR PINK UR PINK
	6GR–11416–30	PLANE BEARING, CRANKSHAFT 1 COUSSINET DE VILEBREQUIN 1	5	5				UR WHITE UR WHITE
12	6GR–11417–00	PLANE BEARING, CRANKSHAFT 2 COUSSINET DE VILEBREQUIN 2	5	5				UR BLACK UR BLACK
	6GR–11417–10	PLANE BEARING, CRANKSHAFT 2 COUSSINET DE VILEBREQUIN 2	5	5				UR BLUE UR BLUE
	6GR–11417–20	PLANE BEARING, CRANKSHAFT 2 COUSSINET DE VILEBREQUIN 2	5	5				UR PINK UR PINK
	6GR–11417–30	PLANE BEARING, CRANKSHAFT 2 COUSSINET DE VILEBREQUIN 2	5	5				UR WHITE UR WHITE
13	6CB–11426–03	BEARING, THRUST 1 ROULEMENT DE BUTEE 1	1	1				
14	6CB–11427–03	BEARING, THRUST 2 ROULEMENT DE BUTEE 2	1	1				
15	6GR–11426–00	BEARING, THRUST 1 ROULEMENT DE BUTEE 1	1	1				
16	6GR–11427–00	BEARING, THRUST 2 ROULEMENT DE BUTEE 2	1	1				
17	6GR–W1165–10	CONNECTING ROD ASSY BIELLE COMPLETTE	8	8				
18	63P–11654–10	.BOLT, CONNECTING ROD .BOULON, BIELLE	2	2				
19	6KN–11631–00	PISTON (STD) PISTON (STD)	8	8				
20	6GR–11603–00	PISTON RING SET (STD) JEU DE SEGMENTS (STD)	8	8				
21	6GR–11633–00	PIN, PISTON AXE, PISTON	8	8				

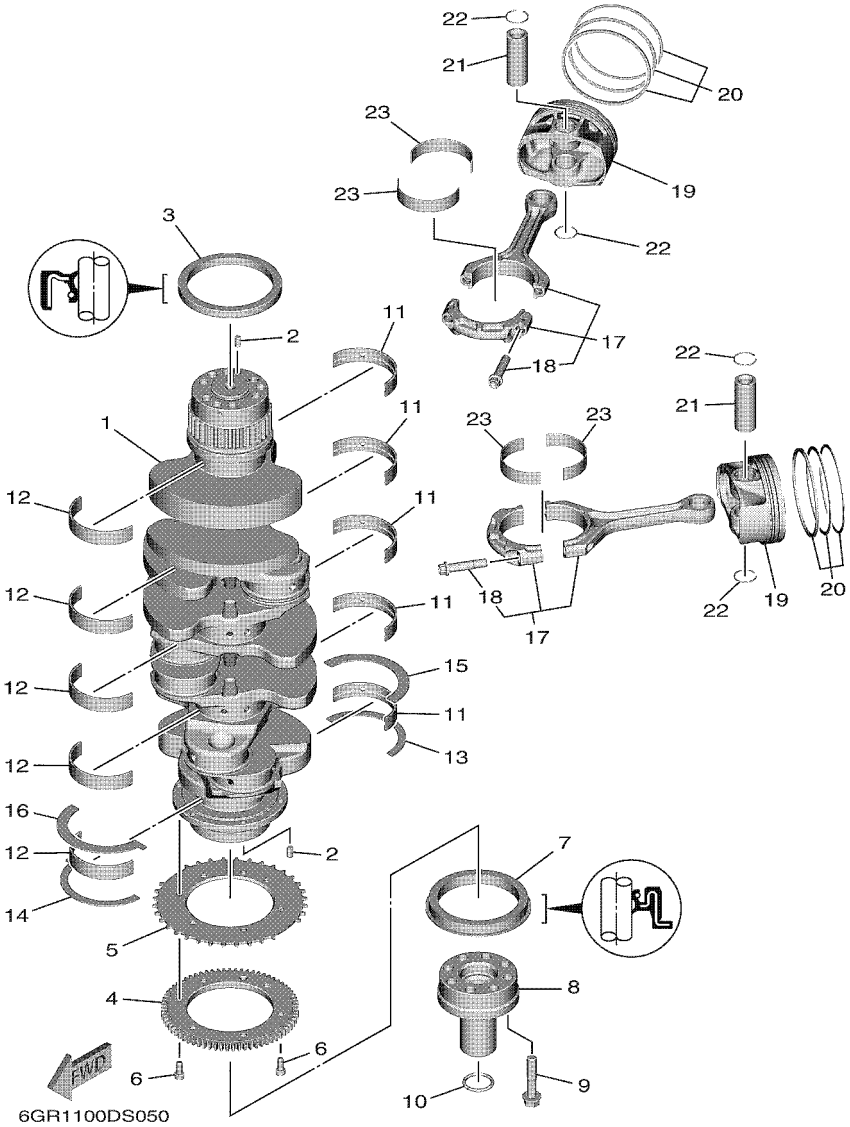

FIG. 4 CRANKSHAFT & PISTON — VILEBREQUIN & PISTON

REF. NO.	PART NO. N° PIECES	DESCRIPTION DESCRIPTION	6KN3	6LB3				REMARKS REMARQUES
22	6GR–11634–00	CLIP, PISTON PIN AGRAFE, AXE DE PISTON	16	16				
23	6GR–11656–00	PLANE BEARING, CONNECTING ROD ROULEMENT DE BIELLE	16	16				UR YELLOW UR YELLOW
	6GR–11656–10	PLANE BEARING, CONNECTING ROD ROULEMENT DE BIELLE	16	16				UR GREEN UR GREEN
	6GR–11656–20	PLANE BEARING, CONNECTING ROD ROULEMENT DE BIELLE	16	16				UR BLUE UR BLUE

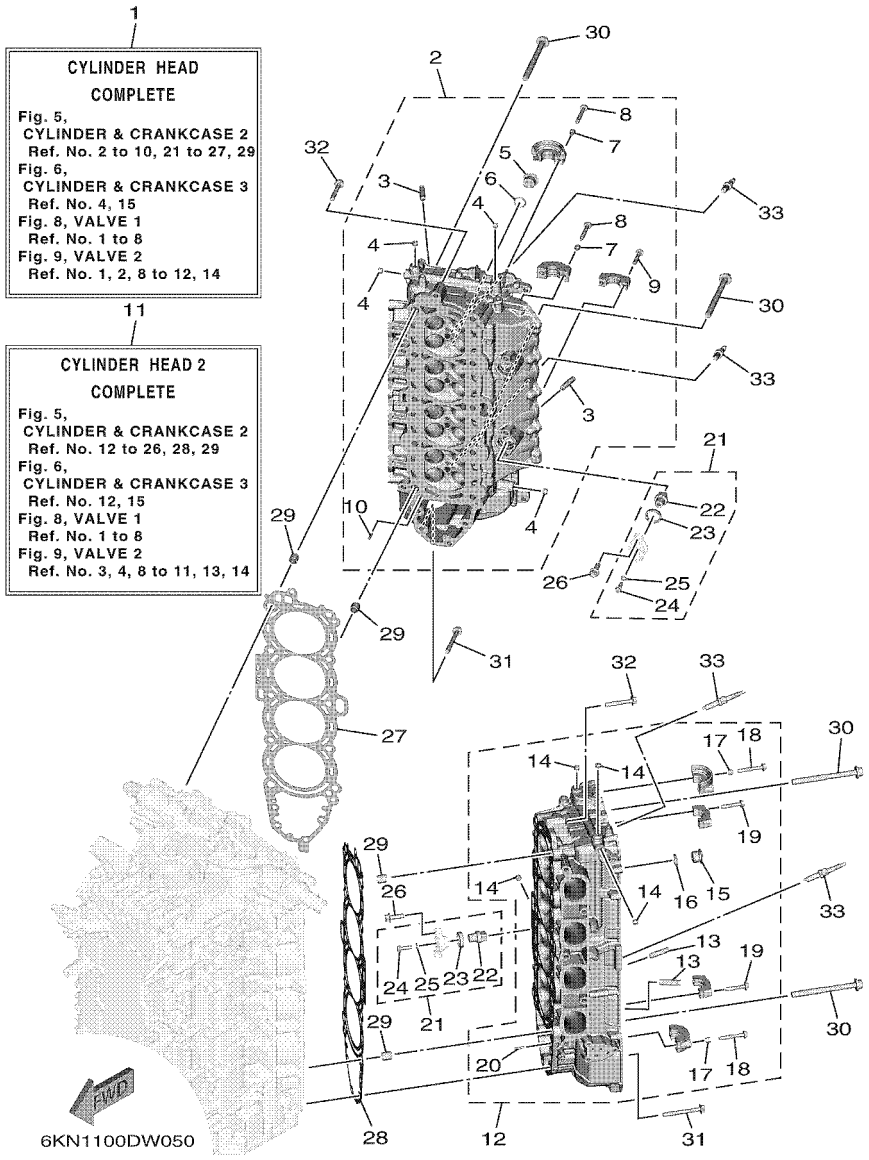

FIG. 5 CYLINDER & CRANKCASE 2 — CYLINDRE & CARTER 2

REF. NO.	PART NO. N° PIECES	DESCRIPTION DESCRIPTION	6KN3	6LB3				REMARKS REMARQUES
1	6KN–W009A–01–9S	CYLINDER HEAD COMPLETE CULASSE (ENS.)	1	1				
2	6KN–11110–00	CYLINDER HEAD ASSY JEU DE CULASSE	1	1				
3	6DA–11133–10	.GUIDE, VALVE 1 .GUIDE, SOUPAPE 1	16	16				
4	90344–51019	.PLUG, TAPER SCREW .PLOT, FILETE CONIQUE	4	4				
5	90340–97002	.PLUG, STRAIGHT SCREW .PLOT, FILETE DROIT	3	3				
6	93210–18322	.O-RING .JOINT TORIQUE	3	3				
7	91809–08006	.PIN, DOWEL .GOUJON, D'ASSEMBLAGE	4	4				
8	90119–07235	.BOLT/WASHER-CAM CAPS .BOULON, AVEC RONDELLE	4	4				
9	90119–07234	.BOLT, WITH WASHER .BOULON, AVEC RONDELLE	18	18				
10	91690–40018	.PIN, SPRING .AGRAFFE	1	1				
11	6KN–W009C–01–9S	CYLINDER HEAD 2 COMPLETE CULASSE 2	1	1				
12	6KN–11120–00	CYLINDER HEAD ASSY 2 CULASSE 2	1	1				
13	6DA–11133–10	.GUIDE, VALVE 1 .GUIDE, SOUPAPE 1	16	16				
14	90344–51019	.PLUG, TAPER SCREW .PLOT, FILETE CONIQUE	4	4				
15	90340–97002	.PLUG, STRAIGHT SCREW .PLOT, FILETE DROIT	3	3				
16	93210–18322	.O-RING .JOINT TORIQUE	3	3				
17	91809–08006	.PIN, DOWEL .GOUJON, D'ASSEMBLAGE	4	4				
18	90119–07235	.BOLT/WASHER-CAM CAPS .BOULON, AVEC RONDELLE	4	4				
19	90119–07234	.BOLT, WITH WASHER .BOULON, AVEC RONDELLE	18	18				
20	91690–40018	.PIN, SPRING .AGRAFFE	1	1				
21	6ML–11301–00	ANODE COVER ASSY COUVERCLE ANODE (ENS.)	4	4				
22	6ML–11325–00	.ANODE .ANODE	1	1				
23	67F–11328–01	.GROMMET, ANODE .PASSE-FIL	1	1				
24	90105–06M07	.BOLT, FLANGE .BOULON, A COLLERETTE	1	1				
25	90430–06M03	.GASKET .JOINT	1	1				
26	95D95–08025	BOLT, FLANGE DEEP RECESS BOULON FIXATION	8	8				
27	6KN–11181–00	GASKET, CYLINDER HEAD 1 JOINT, DE CULASSE 1	1	1				

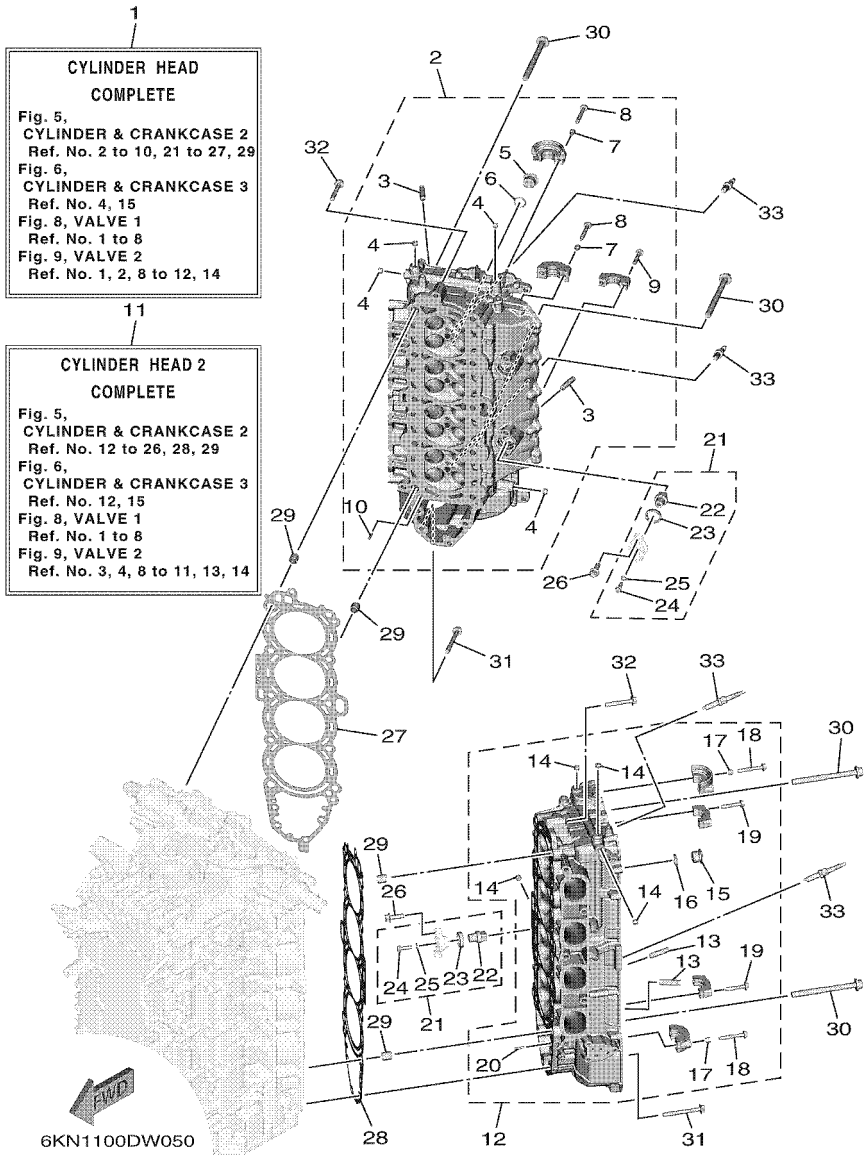

FIG. 5 CYLINDER & CRANKCASE 2 — CYLINDRE & CARTER 2

REF. NO.	PART NO. N° PIECES	DESCRIPTION DESCRIPTION	6KN3	6LB3				REMARKS REMARQUES
28	6KN–11182–00	GASKET, CYLINDER HEAD 2 JOINT, CULASSE 2	1	1				
29	90387–11005	COLLAR COLLERETTE	4	4				
30	90149–11001	SCREW VIS	20	20				
31	90105–08220	BOLT, FLANGE BOULON, A COLLERETTE	8	8				
32	90105–08175	BOLT, FLANGE BOULON, A COLLERETTE	2	2				
33	94702–00447	PLUG, SPARK (NGK ILMAR7H9) BOUGIE D,ALLUMAGE (NGK ILMAR7H	8	8				

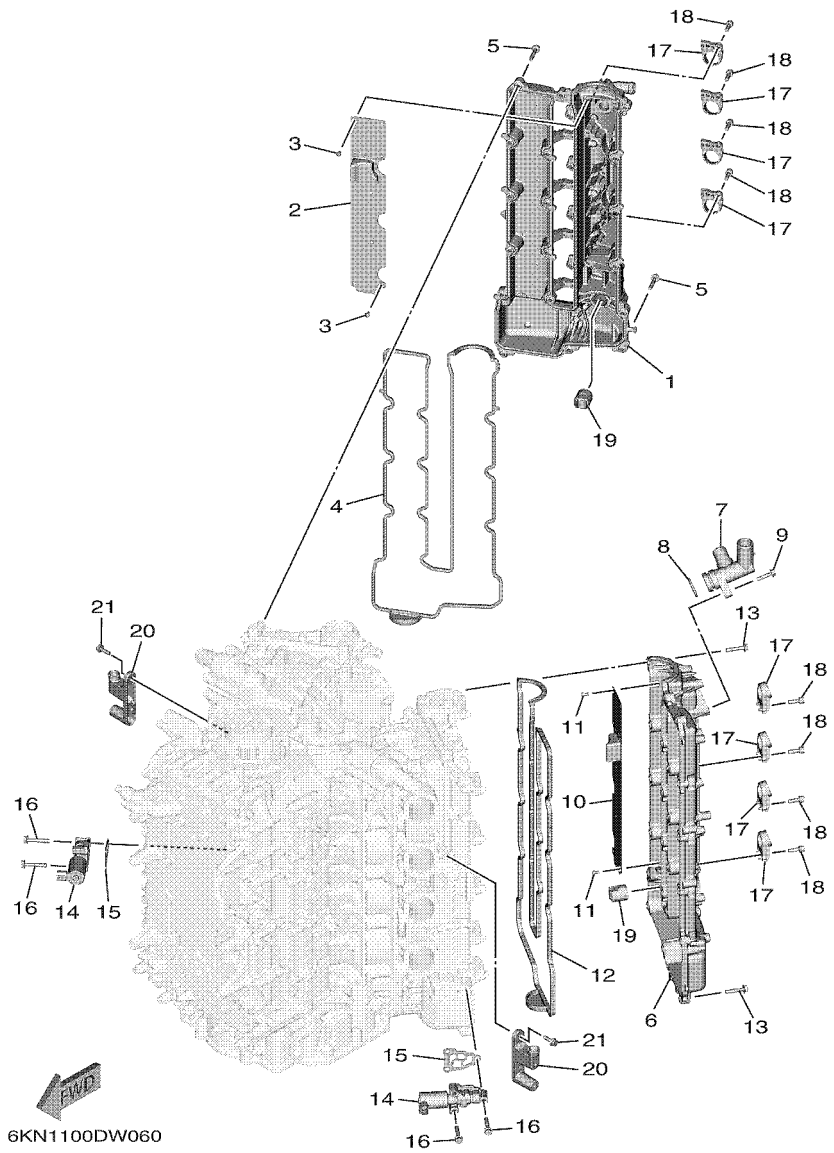

FIG. 6 CYLINDER & CRANKCASE 3 — CYLINDRE & CARTER 3

REF. NO.	PART NO. N° PIECES	DESCRIPTION DESCRIPTION	6KN3	6LB3				REMARKS REMARQUES
1	6GR–11191–00–9S	COVER, CYLINDER HEAD 1 COUVERCLE, CULASSE 1	1	1				
2	6GR–11135–00	PLATE, BREATHER 3 PLAQUE, RENIFLARD 3	1	1				
3	97607–04208	SCREW, WITH WASHER VIS, AVEC RONDELLE	8	8				
4	6GR–11193–00	GASKET, HEAD COVER 1 JOINT, COUVERCLE DE CULASSE 1	1	1				
5	95D95–06030	BOLT, FLANGE DEEP RECESS BOULON FIXATION	22	22				
6	6GR–11192–00–9S	COVER, CYLINDER HEAD 2 COUVERCLE, CULASSE 2	1	1				
7	6GR–11372–00	NIPPLE, HOSE RACCORD, TUYAU	1	1				
8	93210–28646	O-RING JOINT TORIQUE	1	1				
9	95D95–06025	BOLT, FLANGE DEEP RECESS BOULON FIXATION	1	1				
10	6GR–11136–00	PLATE, BREATHER 4 PLAQUE, RENIFLARD 4	1	1				
11	97607–04208	SCREW, WITH WASHER VIS, AVEC RONDELLE	8	8				
12	6GR–11194–00	GASKET, HEAD COVER 2 JOINT, COUVERCLE DE CULASSE 2	1	1				
13	95D95–06030	BOLT, FLANGE DEEP RECESS BOULON FIXATION	22	22				
14	6GR–86120–00	SOLENOID VALVE ASSY SOLENOIDE	2	2				
15	6CB–1242F–00	GASKET, FILTER JOINT, FILTRE	2	2				
16	90105–06035	BOLT, FLANGE BOULON, A COLLERETTE	6	6				
17	6GR–82316–00	BRACKET, IGNITION COIL SUPPORT, BOBINE D'ALLUMAGE	8	8				
18	90110–06038	BOLT, HEXAGON SOCKET HEAD BOULON, TETE HEXAGONALE CREUSE	16	16				
19	6GR–11927–00	LIFTER POUSSOIR	2	2				
20	6GR–42743–00	BRACKET SUPPORT	2	2				
21	95D95–06020	BOLT, FLANGE DEEP RECESS BOULON FIXATION	4	4				

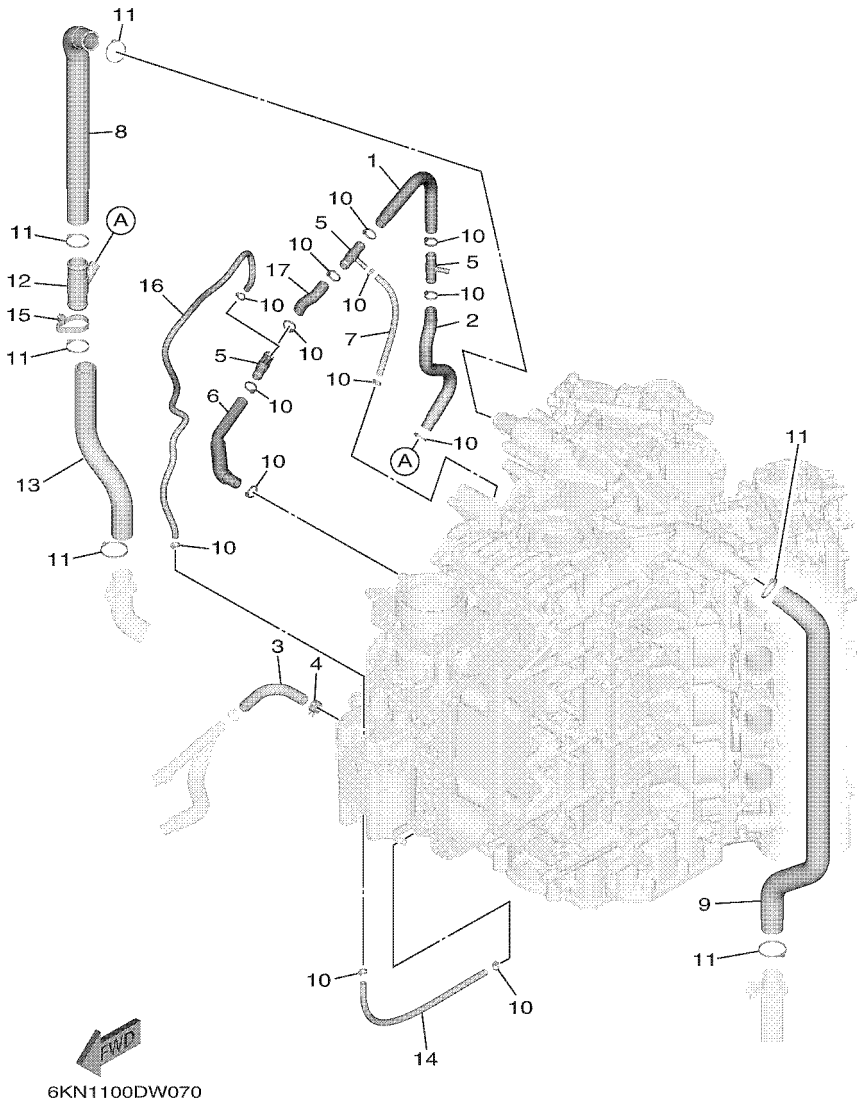

FIG. 7 CYLINDER & CRANKCASE 4 — CYLINDRE & CARTER 4

REF. NO.	PART NO. N° PIECES	DESCRIPTION DESCRIPTION	6KN3	6LB3				REMARKS REMARQUES
1	6KN–12576–00	HOSE 1 TUYAU 1	1	1				
2	6KN–12579–00	HOSE 4 TUYAU 4	1	1				
3	6GR–42541–00	PIPE 1 TUYAU 1	1	1				
4	90467–150A5	CLIP JONC	1	1				
5	6GR–24376–00	PIPE, JOINT 1 DURITE 1, RACCORDEMENT	3	3				
6	6KN–12551–00	HOSE 7 DURITE 7	1	1				
7	90445–09M00	HOSE (L180) DURITE (L180)	1	1				
8	6GR–1243A–00	HOSE 1 DURITE 1	1	1				
9	6GR–1243E–00	HOSE 2 DURITE 2	1	1				
10	90465–11M10	CLAMP BRIDE	14	14				
11	90465–11M59	CLAMP BRIDE	6	6				
12	6GR–12594–00	JOINT, HOSE 4 JOINT DE TUYAU 4	1	1				
13	6GR–1244H–00	HOSE 5 DURITE 5	1	1				
14	90445–09304	HOSE (L310) DURITE (L310)	1	1				
15	90465–13M24	CLAMP BRIDE	1	1				
16	6KN–12588–00	HOSE 5 TUYAU 5	1	1				
17	6KN–12589–00	HOSE 6 TUYAU 6	1	1				

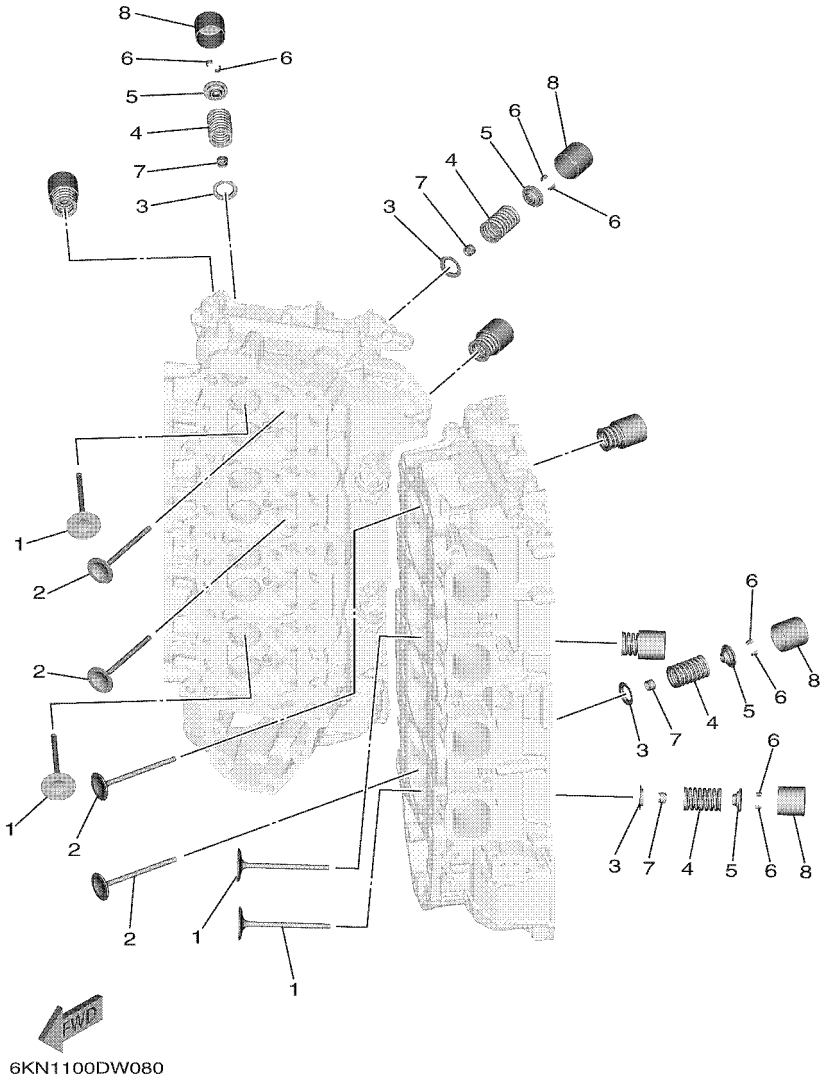

6KN1100DW080

FIG. 8 VALVE 1 — SOUPAPE 1

REF. NO.	PART NO. N° PIECES	DESCRIPTION DESCRIPTION	6KN3	6LB3				REMARKS REMARQUES
1	6GR–12111–00	VALVE, INTAKE SOUPAPE, ADMISSION	16	16				
2	6KN–12121–00	VALVE, EXHAUST SOUPAPE, ECHAPPEMENT	16	16				
3	K0F–A3743–00	SEAT, VALVE SPRING SIEGE, RESSORT DE SOUPAPE	32	32				
4	6CB–12113–00	SPRING, VALVE INNER RESSORT DE SOUPAPE, INTERNE	32	32				
5	K0F–A3741–00	RETAINER, VALVE SPRING BUTEE DE RESSORT DE SOUPAPA	32	32				
6	K0F–A3742–00	LOCK, VALVE SPRING RETAINER FRAISE, SOUPAPE	64	64				
7	51Y–12119–00	SEAL, VALVE STEM JOINT, QUEUE DE SOUPAPE	32	32				
8	6GR–12153–00	LIFTER, VALVE (3.000) LEVE-SOUPAPE (3.000)	32	32				UR UR
	6GR–12153–10	LIFTER, VALVE (3.025) LEVE-SOUPAPE (3.025)	32	32				UR UR
	6GR–12153–20	LIFTER, VALVE (3.050) LEVE-SOUPAPE (3.050)	32	32				UR UR
	6GR–12153–30	LIFTER, VALVE (3.075) LEVE-SOUPAPE (3.075)	32	32				UR UR
	6GR–12153–40	LIFTER, VALVE (3.100) LEVE-SOUPAPE (3.100)	32	32				UR UR
	6GR–12153–50	LIFTER, VALVE (3.120) LEVE-SOUPAPE (3.120)	32	32				UR UR
	6GR–12153–60	LIFTER, VALVE (3.140) LEVE-SOUPAPE (3.140)	32	32				UR UR
	6GR–12153–70	LIFTER, VALVE (3.160) LEVE-SOUPAPE (3.160)	32	32				UR UR
	6GR–12153–80	LIFTER, VALVE (3.180) LEVE-SOUPAPE (3.180)	32	32				UR UR
	6GR–12153–90	LIFTER, VALVE (3.200) LEVE-SOUPAPE (3.200)	32	32				UR UR
	6GR–12153–A0	LIFTER, VALVE (3.220) LEVE-SOUPAPE (3.220)	32	32				UR UR
	6GR–12153–B0	LIFTER, VALVE (3.240) LEVE-SOUPAPE (3.240)	32	32				UR UR
	6GR–12153–C0	LIFTER, VALVE (3.260) LEVE-SOUPAPE (3.260)	32	32				UR UR
	6GR–12153–D0	LIFTER, VALVE (3.280) LEVE-SOUPAPE (3.280)	32	32				UR UR
	6GR–12153–E0	LIFTER, VALVE (3.300) LEVE-SOUPAPE (3.300)	32	32				UR UR
	6GR–12153–F0	LIFTER, VALVE (3.320) LEVE-SOUPAPE (3.320)	32	32				UR UR
	6GR–12153–G0	LIFTER, VALVE (3.340) LEVE-SOUPAPE (3.340)	32	32				UR UR
	6GR–12153–H0	LIFTER, VALVE (3.360) LEVE-SOUPAPE (3.360)	32	32				UR UR
	6GR–12153–J0	LIFTER, VALVE (3.380) LEVE-SOUPAPE (3.380)	32	32				UR UR
	6GR–12153–K0	LIFTER, VALVE (3.400) LEVE-SOUPAPE (3.400)	32	32				UR UR

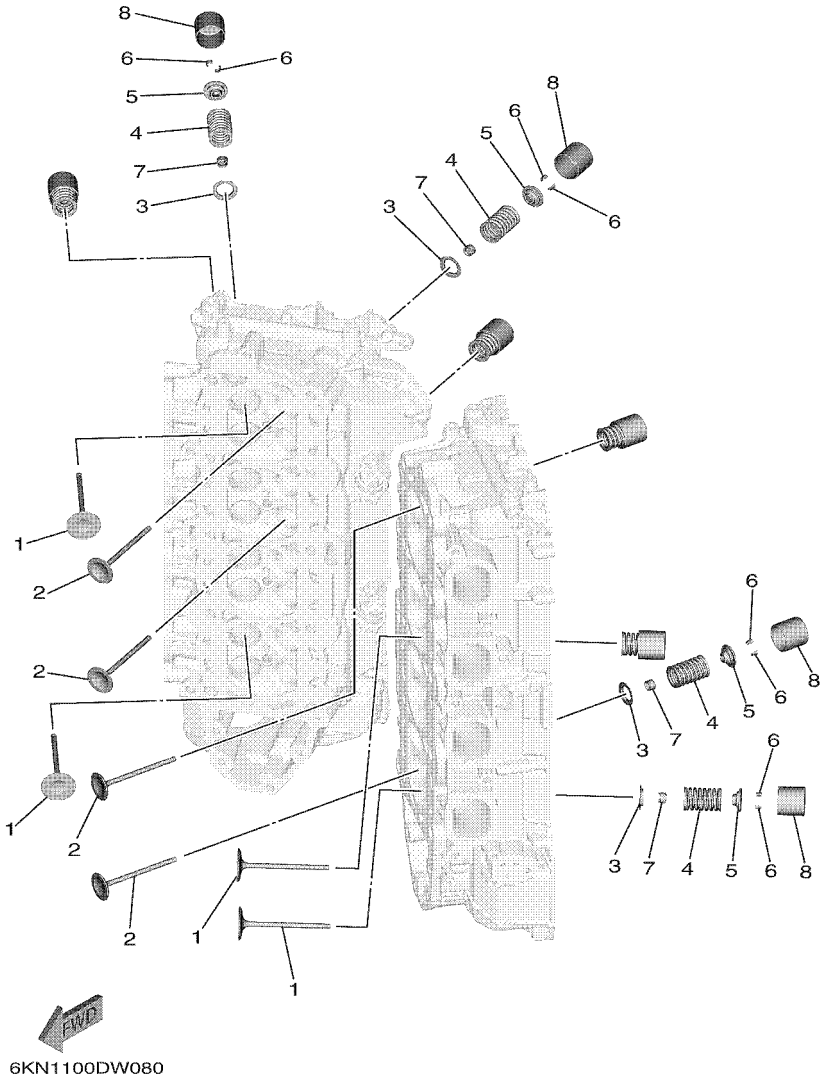

6KN1100DW080

FIG. 8 VALVE 1 — SOUPAPE 1

REF. NO.	PART NO. N° PIECES	DESCRIPTION DESCRIPTION	6KN3	6LB3				REMARKS REMARQUES
8	6GR–12153–L0	LIFTER, VALVE (3.420) LEVE-SOUPAPE (3.420)	32	32				UR UR
	6GR–12153–M0	LIFTER, VALVE (3.440) LEVE-SOUPAPE (3.440)	32	32				UR UR
	6GR–12153–N0	LIFTER, VALVE (3.460) LEVE-SOUPAPE (3.460)	32	32				UR UR
	6GR–12153–P0	LIFTER, VALVE (3.480) LEVE-SOUPAPE (3.480)	32	32				UR UR
	6GR–12153–R0	LIFTER, VALVE (3.500) LEVE-SOUPAPE (3.500)	32	32				UR UR
	6GR–12153–S0	LIFTER, VALVE (3.520) LEVE-SOUPAPE (3.520)	32	32				UR UR
	6GR–12153–T0	LIFTER, VALVE (3.540) LEVE-SOUPAPE (3.540)	32	32				UR UR
	6GR–12145–00	LIFTER, VALVE (3.560) LEVE-SOUPAPE (3.560)	32	32				UR UR
	6GR–12145–10	LIFTER, VALVE (3.580) LEVE-SOUPAPE (3.580)	32	32				UR UR
	6GR–12145–20	LIFTER, VALVE (3.600) LEVE-SOUPAPE (3.600)	32	32				UR UR
	6GR–12145–30	LIFTER, VALVE (3.625) LEVE-SOUPAPE (3.625)	32	32				UR UR
	6GR–12145–40	LIFTER, VALVE (3.650) LEVE-SOUPAPE (3.650)	32	32				UR UR
	6GR–12145–50	LIFTER, VALVE (3.675) LEVE-SOUPAPE (3.675)	32	32				UR UR
	6GR–12145–60	LIFTER, VALVE (3.700) LEVE-SOUPAPE (3.700)	32	32				UR UR

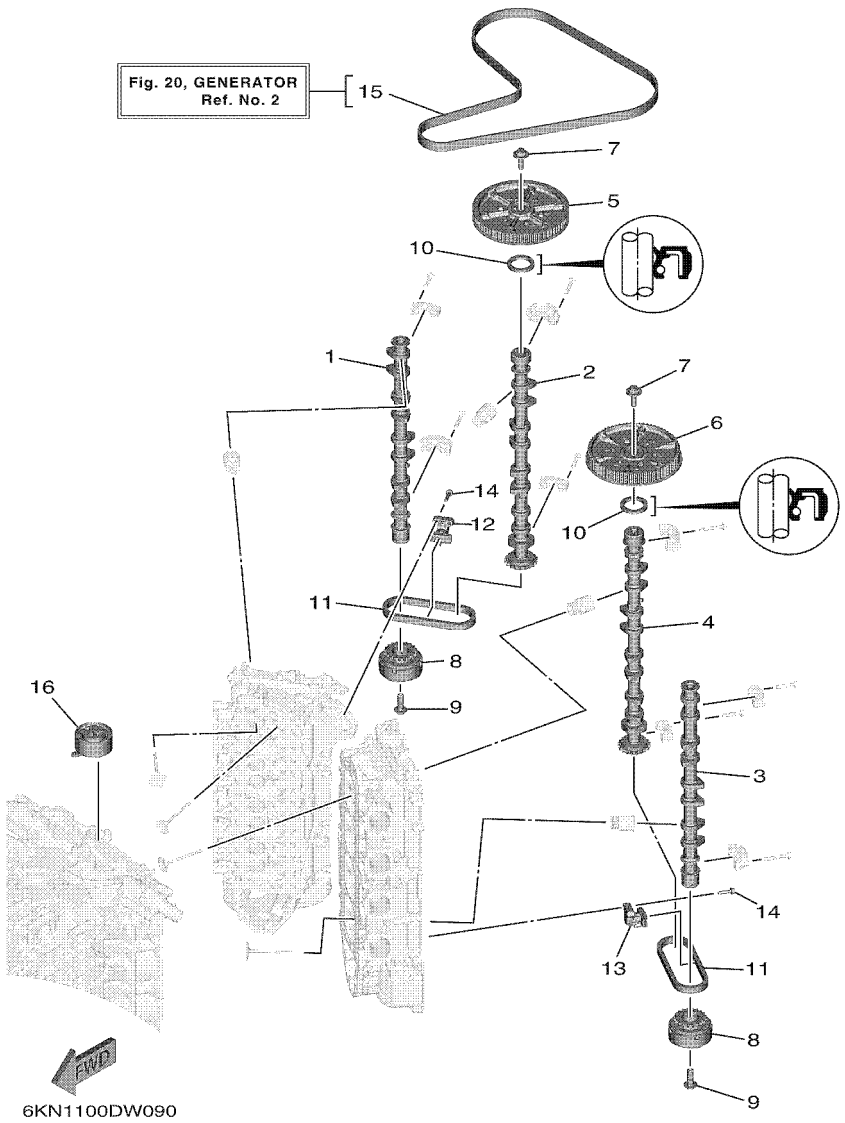

FIG. 9 VALVE 2 — SOUPAPE 2

REF. NO.	PART NO. N° PIECES	DESCRIPTION DESCRIPTION	6KN3	6LB3				REMARKS REMARQUES
1	6KN–12171–00	CAMSHAFT 1 ARBRE A CAMES 1	1	1				
2	6KN–12181–00	CAMSHAFT 2 ARBRE A CAMES 2	1	1				
3	6KN–12172–00	CAMSHAFT 3 ARBRE A CAMES 3	1	1				
4	6KN–12182–00	CAMSHAFT 4 ARBRE A CAMES 4	1	1				
5	6GR–115A0–00	DRIVEN GEAR ASSY CLOCHE D'EMBRAYAGE	1	1				
6	6GR–11567–00	GEAR, DRIVEN 2 PIGNON SECONDAIRE 2	1	1				
7	90119–10050	BOLT, WITH WASHER BOULON, AVEC RONDELLE	2	2				
8	6GR–12645–00	PULLEY ASSY 1 POULIE COMPLET 1	2	2				
9	90401–12002	BOLT, UNION BOULON, RACCORD	2	2				
10	93102–38008	OIL SEAL JOINT SPY	2	2				
11	94581–99044	CHAIN CHAINE	2	2				
12	6GR–12210–00	TENSIONER ASSY, CAM CHAIN TENDEUR DE CHAINE DISTRIBUTION	1	1				
13	6GR–12230–00	TENSIONER ASSY, CAM CHAIN 2 TENDEUR DE CHAINE DISTRIBUTION	1	1				
14	90105–06037	BOLT, FLANGE BOULON, A COLLERETTE	4	4				
15	6GR–W4624–00	BELT (WITH ROTOR BOLTS) COURROIE (AVEC BOULON)	1	1				
16	6P2–11590–03	TENSIONER ASSY TENDEUR (ENS.)	1	1				

FIG. 10 INTAKE — ADMISSION

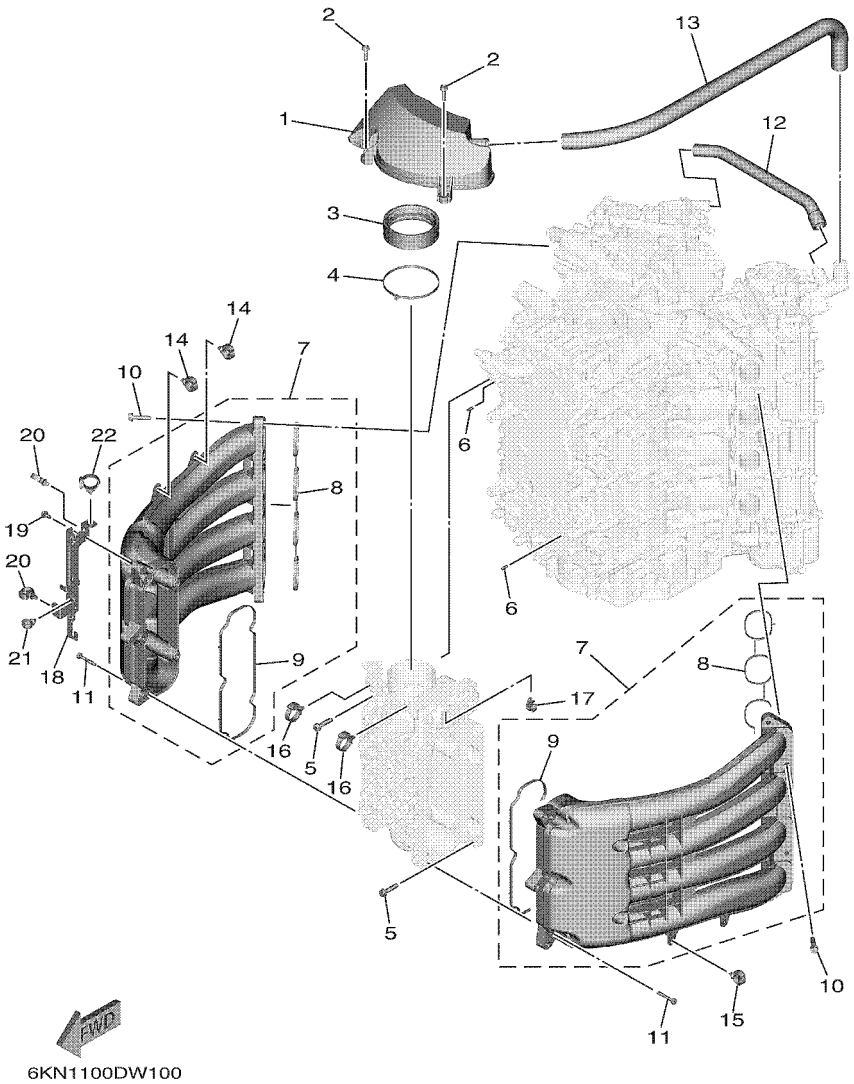

REF. NO.	PART NO. N° PIECES	DESCRIPTION DESCRIPTION	6KN3	6LB3				REMARKS REMARQUES
1	6KN–14440–00	SILENCER ASSY, INTAKE SIENCIEUX D'ADMISSION	1	1				
2	95D95–06025	BOLT, FLANGE DEEP RECESS BOULON FIXATION	2	2				
3	6AW–1441J–01	PIPE, SILENCER DURITE, DE SILENCIEUX	1	1				
4	90464–99004	CLAMP BRIDE	1	1				
5	90119–08022	BOLT, WITH WASHER BOULON, AVEC RONDELLE	6	6				
6	91690–50014	PIN, SPRING AGRAFFE	2	2				
7	6GR–13641–00	MANIFOLD, INTAKE 1 TUBULURE, ADMISSION 1	2	2				
8	6GR–13645–00	.GASKET, MANIFOLD 1 .JOINT, TUBULURE 1	1	1				
9	6GR–13646–00	.GASKET, MANIFOLD 2 .JOINT, TUBULURE 2	1	1				
10	90119–08022	BOLT, WITH WASHER BOULON, AVEC RONDELLE	10	10				
11	90119–06MA6	BOLT, WITH WASHER BOULON, AVEC RONDELLE	10	10				
12	6GR–1531A–00	HOSE, BREATHER 1 DURITE DE RENIFLARD 1	1	1				
13	6KN–1531A–10	HOSE, BREATHER 1 DURITE DE RENIFLARD 1	1	1				
14	90464–20181	CLAMP BRIDE	2	2				
15	90464–20181	CLAMP BRIDE	1	1				
16	90464–12183	CLAMP BRIDE	2	2				
17	90464–13249	CLAMP BRIDE	1	1				
18	6KN–8257G–00	CLAMP, CORD COLLIER, CORDON	1	1				
19	95D95–06012	BOLT, FLANGE DEEP RECESS BOULON FIXATION	2	2				
20	90464–20181	CLAMP BRIDE	2	2				
21	90464–13249	CLAMP BRIDE	1	1				
22	90464–12183	CLAMP BRIDE	1	1				

FIG. 11 THROTTLE BODY ASSY — CARTER D'ACCELERATEUR

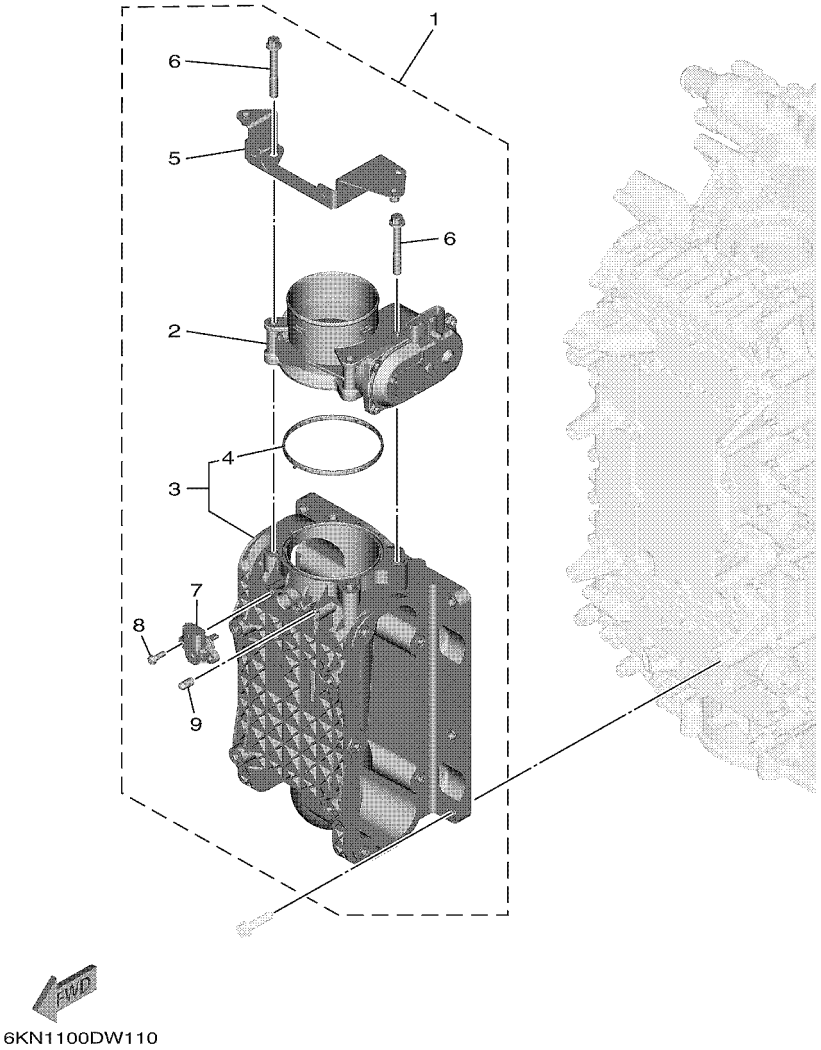

REF. NO.	PART NO. N° PIECES	DESCRIPTION DESCRIPTION	6KN3	6LB3				REMARKS REMARQUES
1	6KN–13750–00	THROTTLE BODY ASSY CARTER D'ACCELERATEUR COMPLET	1	1				
2	6GR–13751–00	.BODY, THROTTLE 1 .CARTER 1	1	1				
3	6GR–13711–00	.MIXING BODY .CHAMBRE DE MELANGE	1	1				
4	6GR–13556–00	..GASKET, MANIFOLD ..JOINT, TUBULURE	1	1				
5	6KN–13898–00	.HOLDER .SUPPORT	1	1				
6	90105–08M36	.BOLT, FLANGE .BOULON, A COLLERETTE	4	4				
7	68F–83688–10	.SENSOR ASSY .SONDE (ENS.)	1	1				
8	68V–81147–00	.SCREW 3 .VIS 3	2	2				
9	63P–13643–00	.COVER, MANIFOLD .COUVERCLE, TUBULURE	1	1				

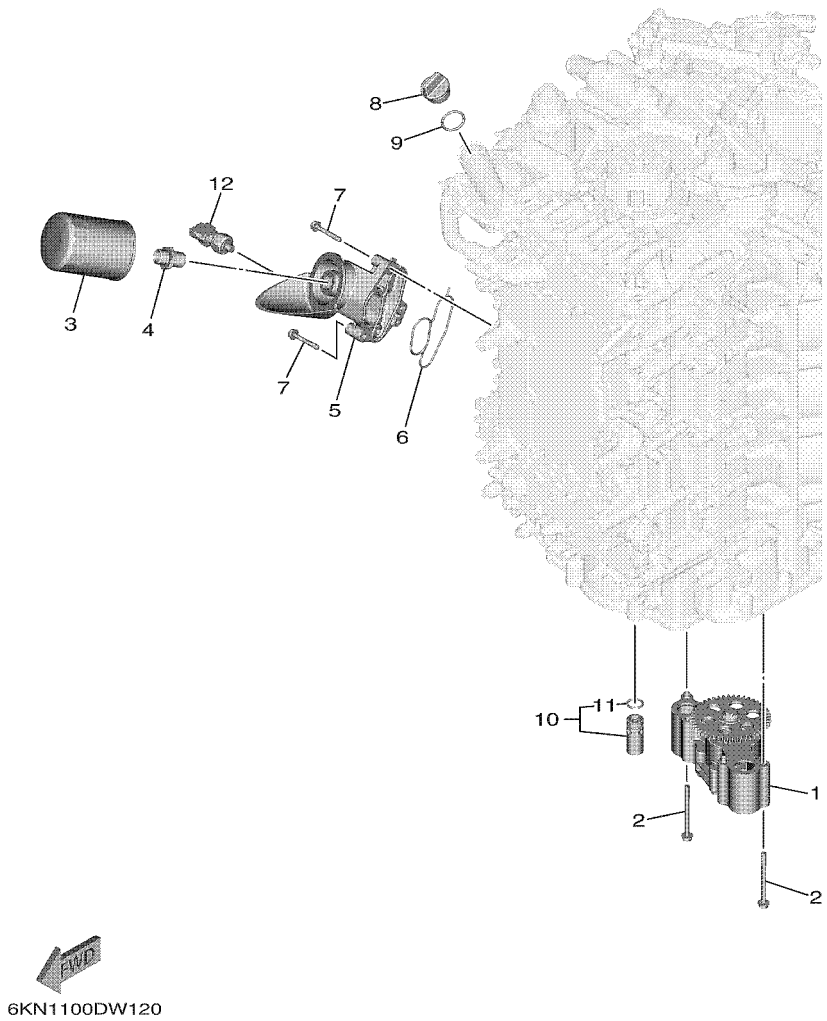

FIG. 12 OIL PUMP — POMPE A HUILE

REF. NO.	PART NO. N° PIECES	DESCRIPTION DESCRIPTION	6KN3	6LB3				REMARKS REMARQUES
1	6GR–13300–01	OIL PUMP ASSY POMPE A HUILE COMPLETE	1	1				
2	95817–06075	BOLT, FLANGE BOULON, A COLLERETTE	4	4				
3	N26–13440–03	ELEMENT ASSY, OIL CLEANER ELEMENT, FILTRE A HUILE	1	1				
4	90401–19001	BOLT, UNION BOULON, RACCORD	1	1				
5	6GR–13446–00	CONNECTOR CONNECTEUR	1	1				
6	6GR–13477–00	GASKET JOINT	1	1				
7	90105–06151	BOLT, FLANGE BOULON, A COLLERETTE	3	3				
8	6G8–15363–00	PLUG, OIL PLOT, HUILE	1	1				
9	93210–24M79	O-RING JOINT TORIQUE	1	1				
10	6GR–13490–00	RELIEF VALVE ASSY SOUPAPE DE SECURITE COMPLET	1	1				
11	6GR–13473–00	.O-RING .JOINT TORIQUE	1	1				
12	6AW–83651–01	SENDER, OIL PRESSURE RACCORD, PRESSION D'HUILE	1	1				

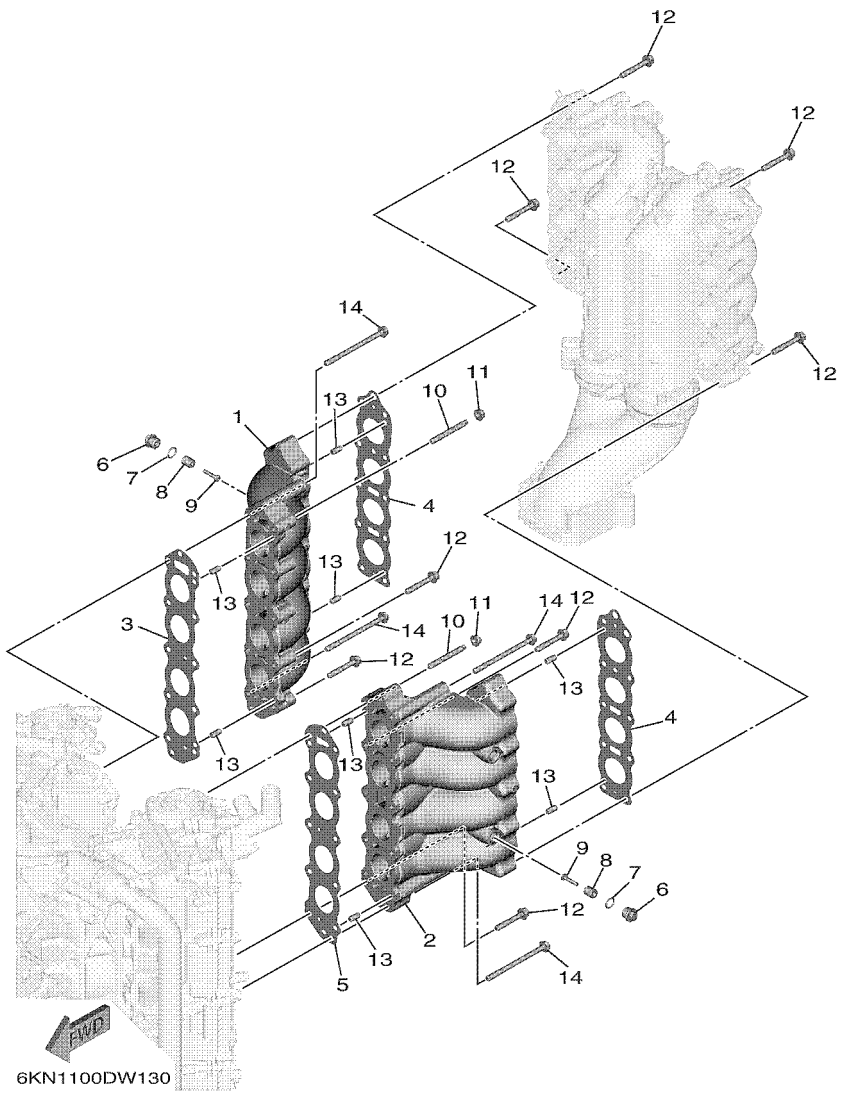

FIG. 13 EXHAUST 1 — ECHAPPEMENT 1

REF. NO.	PART NO. N° PIECES	DESCRIPTION DESCRIPTION	6KN3	6LB3				REMARKS REMARQUES
1	6KN–14615–00–9S	JOINT, EXHAUST 1 JOINT D'ECHAPPEMENT	1	1				
2	6KN–14625–00–9S	JOINT, EXHAUST 2 JOINT D'ECHAPPEMENT	1	1				
3	6KN–14613–00	GASKET, EXHAUST PIPE JOINT DE COUDE D'ECHAPPEMENT	1	1				
4	6KN–14623–00	GASKET, EXHAUST PIPE JOINT	2	2				
5	6KN–14643–00	GASKET 3 JOINT 3	1	1				
6	6G8–11197–A0	PLUG, BLIND PLOT, BORGNE	4	4				
7	93210–13M63	O-RING JOINT TORIQUE	4	4				
8	6G8–11325–00	ANODE ANODE	4	4				
9	98980–05025	SCREW, BIND VIS, DE PRESSION	4	4				
10	90116–08037	BOLT, STUD GOUJON	4	4				
11	90179–08M34	NUT ECROU	4	4				
12	90105–08175	BOLT, FLANGE BOULON, A COLLERETTE	22	22				
13	93608–16M16	PIN, DOWEL AXE	8	8				
14	90105–08279	BOLT, FLANGE BOULON, A COLLERETTE	10	10				

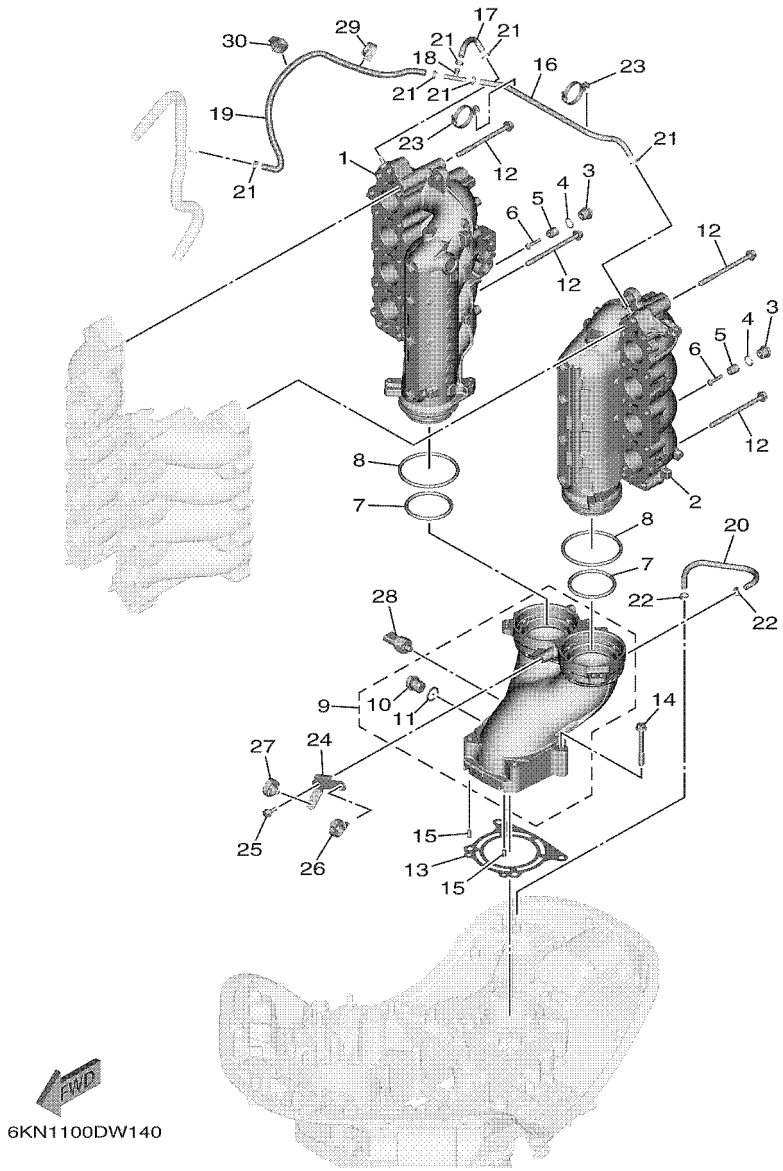

FIG. 14 EXHAUST 2 — ECHAPPEMENT 2

REF. NO.	PART NO. N° PIECES	DESCRIPTION DESCRIPTION	6KN3	6LB3				REMARKS REMARQUES
1	6KN–14635–00–9S	JOINT, EXHAUST 3 JOINT, ECHAPPEMENT 3	1	1				
2	6KN–14645–00–9S	JOINT, EXHAUST 4 CALE, AXE DE KICK	1	1				
3	6G8–11197–A0	PLUG, BLIND PLOT, BORGNE	2	2				
4	93210–13M63	O-RING JOINT TORIQUE	2	2				
5	6G8–11325–00	ANODE ANODE	2	2				
6	98980–05025	SCREW, BIND VIS, DE PRESSION	2	2				
7	93210–65001	O-RING JOINT TORIQUE	2	2				
8	93210–85003	O-RING JOINT TORIQUE	2	2				
9	6KN–14656–00–9S	JOINT, EXHAUST 5 JOINT, ECHAPPEMENT 5	1	1				
10	90340–18M09	.PLUG, STRAIGHT SCREW .PLOT, FILETE DROIT	1	1				
11	90201–186F1	.WASHER, PLATE .RONDELLE, PLATE	1	1				
12	90105–08277	BOLT, FLANGE BOULON, A COLLERETTE	10	10				
13	6GR–41134–00	GASKET, EXHAUST MANIFOLD JOINT, PIPE D'ECHAPPEMENT	1	1				
14	90105–08220	BOLT, FLANGE BOULON, A COLLERETTE	4	4				
15	93606–12019	PIN, DOWEL GOUPILLE	2	2				
16	90445–09104	HOSE (L300) DURITE (L300)	1	1				
17	90445–09063	HOSE (L80) DURITE (L80)	1	1				
18	688–24378–00	PIPE, JOINT 3 DURITE RACCORDEMENT 3	1	1				
19	6KN–12481–00	PIPE 1 DURITE 1	1	1				
20	90445–09095	HOSE (L215) DURITE (L215)	1	1				
21	90465–11M10	CLAMP BRIDE	6	6				
22	90465–11M10	CLAMP BRIDE	2	2				
23	90464–09028	CLAMP BRIDE	2	2				
24	6KN–82588–00	PLATE PLAQUE	1	1				
25	95D95–06016	BOLT, FLANGE DEEP RECESS BOULON FIXATION	1	1				
26	90464–20181	CLAMP BRIDE	1	1				
27	90464–20181	CLAMP BRIDE	1	1				

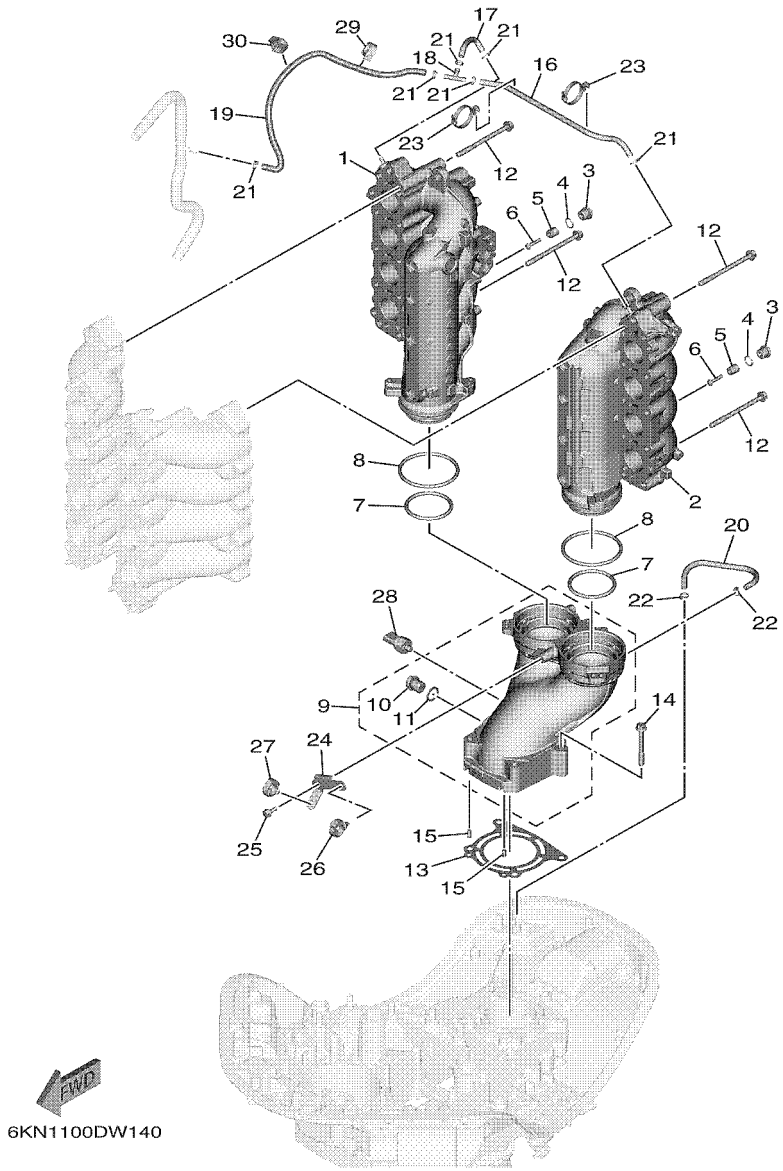

FIG. 14 EXHAUST 2 — ECHAPPEMENT 2

REF. NO.	PART NO. N° PIECES	DESCRIPTION DESCRIPTION	6KN3	6LB3				REMARKS REMARQUES
28	6GR–8366B–00	SENSOR, WATER PRESSURE SONDE DE PRESSION D'EAU	1	1				
29	90464–18004	CLAMP BRIDE	1	1				
30	90464–18004	CLAMP BRIDE	1	1				

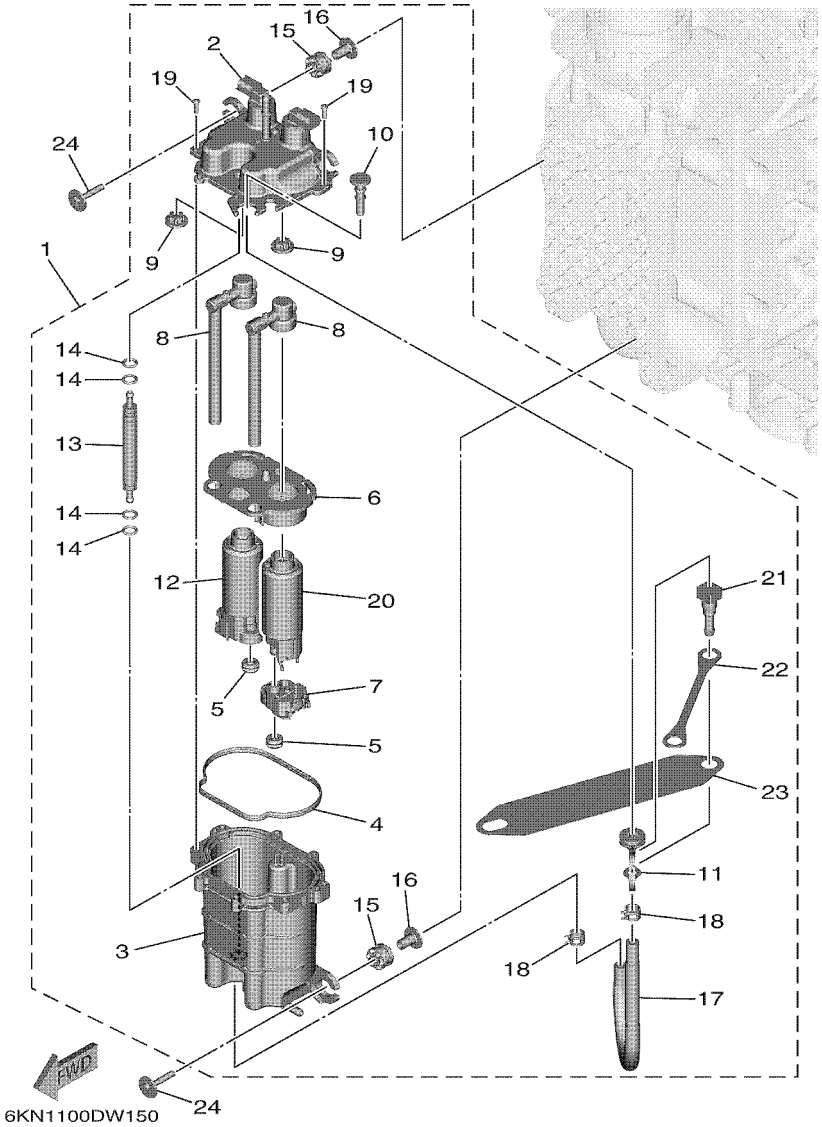

FIG. 15 VAPOR SEPARATOR — VAPEUR SEPARATEUR

REF. NO.	PART NO. N° PIECES	DESCRIPTION DESCRIPTION	6KN3	6LB3				REMARKS REMARQUES
1	6GR–24220–03	FUEL TANK COMP. 2 RESERVOIR A ESSENCE 2	1	1				
2	6GR–24223–00	.COVER, FUEL TANK ASSY .COUVERTURE, RESERVOIR DE CARBU	1	1				
3	6GR–24224–01	.CASE, FUEL TANK ASSY. .CAS, RESERVOIR DE CARBURANT	1	1				
4	6GR–24218–00	.GASKET .JOINT	1	1				
5	6GR–13781–00	.DAMPER, PUMP .AMORTISSEUR, POMPE	2	2				
6	6GR–2441R–00	.PLATE, BAFFLE 1 .SEPARATEUR 1	1	1				
7	6GR–244A1–00	.CASE, PUMP 1 .CARTER DE POMPE 1	1	1				
8	6GR–13938–00	.PIPE .DURITE	2	2				
9	6GR–13593–00	.DAMPER .AMORTISSEUR	2	2				
10	6GR–24196–00	.PLUG, DRAIN .PLOT, VIDANGE	1	1				
11	6GR–2419A–00	.HOLDER .SUPPORT	1	1				
12	6GR–24430–00	.FUEL PUMP ASSY .POMPE A ESSENCE	1	1				
13	6GR–21841–00	.COOLER .RADIATEUR	1	1				
14	6FM–14562–00	.O-RING .JOINT TORIQUE	4	4				
15	6CB–13593–00	.DAMPER .AMORTISSEUR	4	4				
16	6GR–13716–00	.COLLAR .COLLERETTE	4	4				
17	6GR–14197–00	.PIPE .DURITE	1	1				
18	68V–13577–01	.CLIP .AGRAFE	2	2				
19	6GR–14567–00	.SCREW .VIS	8	8				
20	6GR–24420–10	.FUEL PUMP ASSY .POMPE A ESSENCE	1	1				
21	6AW–24300–11	.FUEL PIPE JOINT .DURITE RACCORDEMT. A ESSENCE	1	1				
22	6GR–24113–00	.PLATE, CONNECTING .PLAQUE DE CONNEXION	1	1				
23	6GR–2415H–00	.LABEL, WARNING .ETIQUETTE, AVERTISSEMENT	1	1				
24	90119–06299	BOLT, WITH WASHER BOULON, AVEC RONDELLE	4	4				

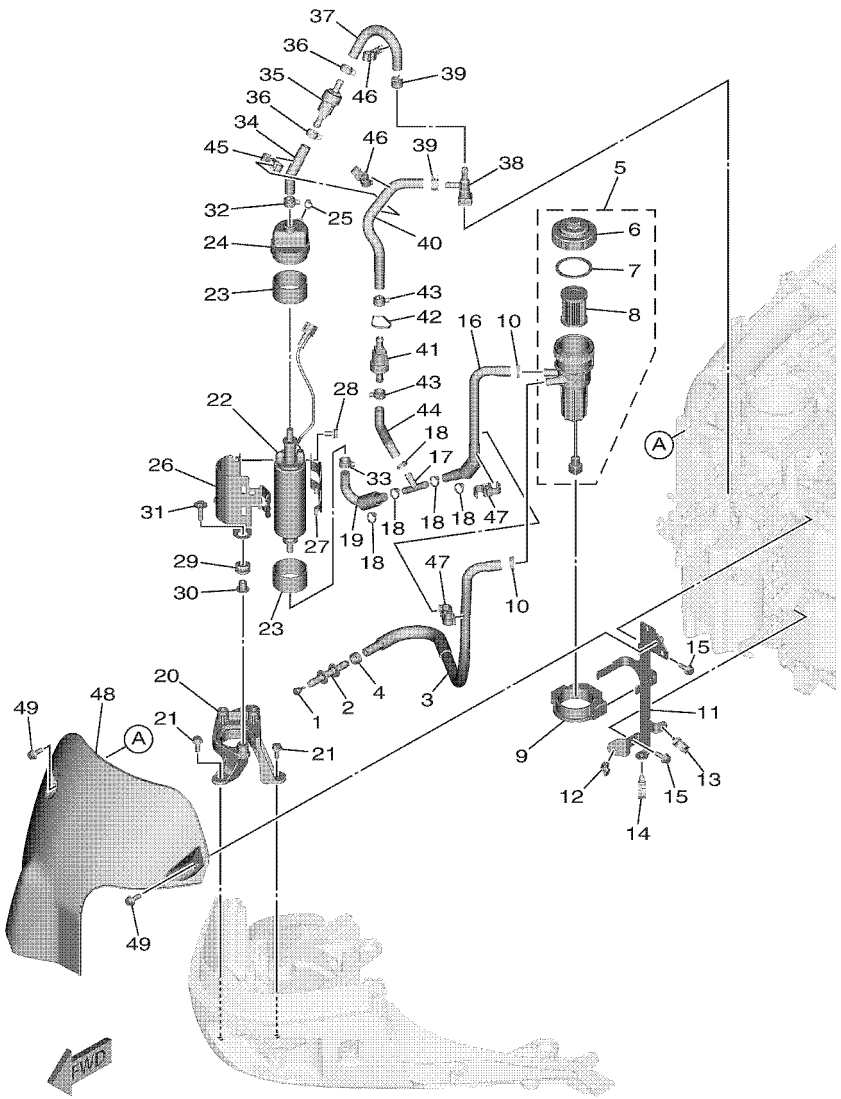

FIG. 16 FUEL 1 — CARBURANT 1

REF. NO.	PART NO. N° PIECES	DESCRIPTION DESCRIPTION	6KN3	6LB3				REMARKS REMARQUES
1	689–85547–01	DAMPER AMORTISSEUR	1	1				
2	6AW–24377–01	PIPE, JOINT 2 DURITE RACCORDEMENT 2	1	1				
3	6GR–24311–00	PIPE, FUEL 1 DURITE A ESSENCE	1	1				
4	6E5–24351–51	BAND 1 COLLIER 1	1	1				
5	6GR–24560–01	FILTER ASSY ENS FILTRE	1	1				
6	6GR–24561–00	.BODY,FILTER .TAMIS, FILTRE	1	1				
7	6P3–24564–00	.GASKET .JOINT	1	1				
8	6P3–24563–02	.ELEMENT, FILTER .ELEMENT, FILTRE	1	1				
9	6GR–24568–01	BAND, FILTER COLLIER, FILTRE	1	1				
10	90465–11M10	CLAMP BRIDE	2	2				
11	6GR–24566–00	BRACKET, FILTER SUPPORT, FILTRE	1	1				
12	90464–11121	CLAMP BRIDE	1	1				
13	90464–13249	CLAMP BRIDE	1	1				
14	90464–18246	CLAMP BRIDE	1	1				
15	95D95–06016	BOLT, FLANGE DEEP RECESS BOULON FIXATION	2	2				
16	6GR–24312–01	PIPE 2 DURITE 2	1	1				
17	6E5–24378–00	PIPE, JOINT 3 DURITE, RACCORDEMENT 3	1	1				
18	90465–11M10	CLAMP BRIDE	5	5				
19	6GR–24321–01	PIPE 10 DURITE 10	1	1				
20	6GR–24425–00	BRACKET, FUEL PUMP 1 SUPPORT, POMPE A ESSENCE 1	1	1				
21	95D95–06016	BOLT, FLANGE DEEP RECESS BOULON FIXATION	3	3				
22	6GR–24410–02	FUEL PUMP ASSY POMPE A ESSENCE	1	1				
23	6DA–24492–01	BUSH, FUEL PUMP BAGUE	2	2				
24	6GR–24462–01	CAP, BLIND COUVERCLE, BORGNE	1	1				
25	90465–11M10	CLAMP BRIDE	1	1				
26	6GR–24491–00	BRACKET, FUEL PUMP SUPPORT, POMPE A ESSENCE	1	1				
27	6GR–24426–00	BRACKET, FUEL PUMP 2 SUPPORT, POMPE A ESSENCE 2	1	1				

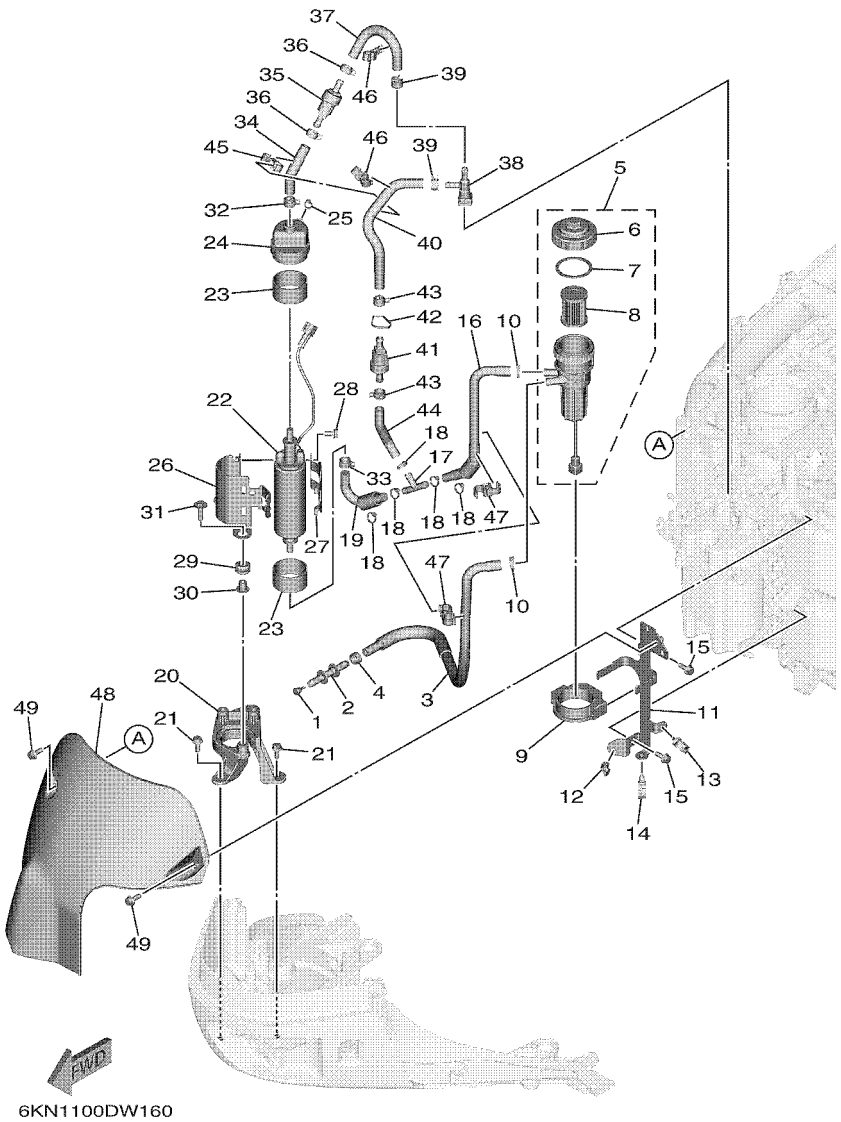

FIG. 16 FUEL 1 — CARBURANT 1

REF. NO.	PART NO. N° PIECES	DESCRIPTION DESCRIPTION	6KN3	6LB3				REMARKS REMARQUES
28	95D95–06012	BOLT, FLANGE DEEP RECESS BOULON FIXATION	2	2				
29	90480–10M23	GROMMET PASSE-FIL	3	3				
30	90387–06289	COLLAR COLLERETTE	3	3				
31	90119–06309	BOLT, WITH WASHER BOULON, AVEC RONDELLE	3	3				
32	90467–140A9	CLIP JONC	1	1				
33	90467–141A2	CLIP JONC	1	1				
34	6GR–24322–00	PIPE 11 DURITE 11	1	1				
35	6R5–24408–10	FUEL FEED ASSY ALIMENT D'ESSENCE	1	1				
36	90467–140A9	CLIP JONC	2	2				
37	6GR–24323–00	PIPE 12 DURITE 12	1	1				
38	6P2–24300–01	FUEL PIPE JOINT DURITE RACCORDEMT. A ESSENCE	1	1				
39	90467–120A7	CLIP JONC	2	2				
40	6GR–24324–00	PIPE 13 DURITE 13	1	1				
41	6GR–24460–20	RELIEF VALVE ASSY SOUPAPE DE SECURITE COMPLET	1	1				
42	90465–13M60	CLAMP BRIDE	1	1				
43	90467–140A9	CLIP JONC	2	2				
44	6GR–24325–01	PIPE 14 DURITE 14	1	1				
45	90464–12009	CLAMP BRIDE	1	1				
46	90464–12010	CLAMP BRIDE	2	2				
47	90464–12009	CLAMP BRIDE	2	2				
48	6GR–24596–01	COVER COUVERCLE	1	1				
49	95D95–06016	BOLT, FLANGE DEEP RECESS BOULON FIXATION	3	3				

FIG. 17 FUEL 2 — CARBURANT 2

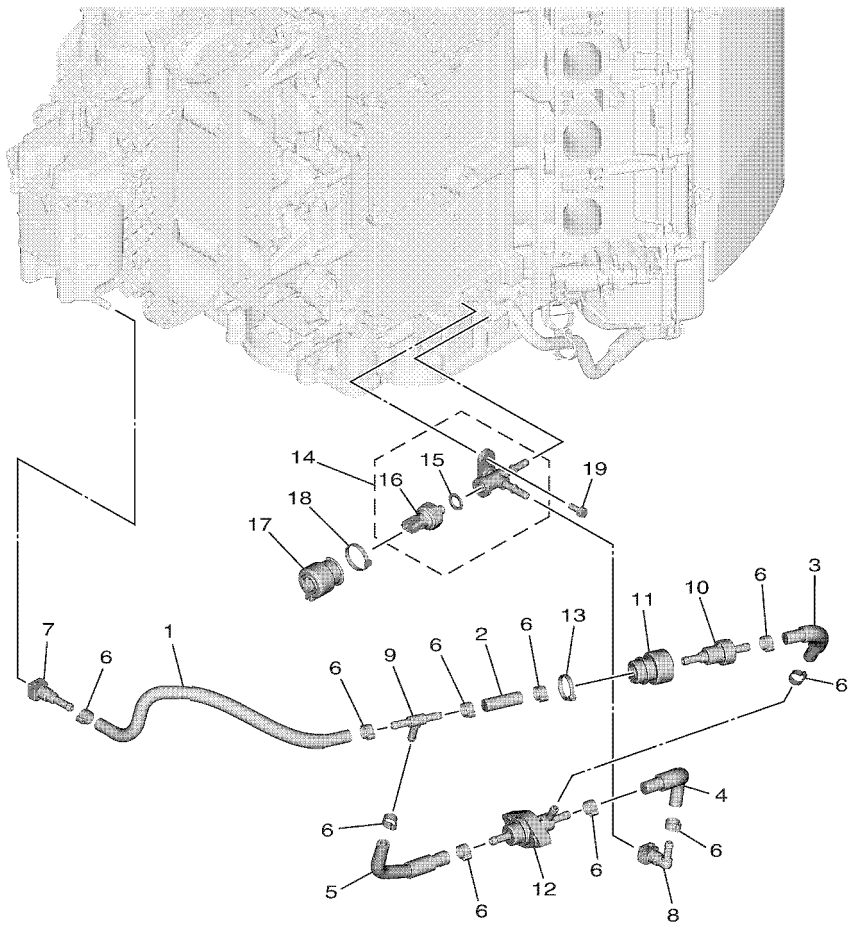

6GR3010DU170

REF. NO.	PART NO. N° PIECES	DESCRIPTION DESCRIPTION	6KN3	6LB3				REMARKS REMARQUES
1	6GR–24313–00	PIPE 3 DURITE 3	1	1				
2	6GR–24314–00	PIPE 4 DURITE 4	1	1				
3	6GR–24315–00	PIPE 5 DURITE 5	1	1				
4	6GR–24316–00	PIPE 6 DURITE 6	1	1				
5	6GR–24317–10	PIPE 7 DURITE 7	1	1				
6	90467–141A1	CLIP JONC	10	10				
7	6AW–24300–11	FUEL PIPE JOINT DURITE RACCORDEMT. A ESSENCE	1	1				
8	6AW–24300–01	FUEL PIPE JOINT DURITE RACCORDEMT. A ESSENCE	1	1				
9	6CB–24461–00	PIPE, JOINT DURITE, RACCORDEMENT	1	1				
10	6GR–24408–01	FUEL FEED ASSY ALIMENT D'ESSENCE	1	1				
11	6GR–24217–00	COVER COUVERCLE	1	1				
12	6GR–24460–01	RELIEF VALVE ASSY SOUPAPE DE SECURITE COMPLET	1	1				
13	90465–13M97	CLAMP BRIDE	1	1				
14	6GR–8A411–00	SENSOR UNIT 1 CAPTEUR UNIT1	1	1				
15	6GR–825A8–00	.SEAL, SENSOR .SEAL, CAPTEUR	1	1				
16	6GR–82421–00	.SENSOR, FUEL PRESSURE .CAPTEUR, PRESSION DE CARBURANT	1	1				
17	6GR–2464E–01	COVER, CAP COUVERCLE	1	1				
18	90465–13M97	CLAMP BRIDE	1	1				
19	97E95–06516	BOLT, HEXAGON W/W DEEP RECESS VIS HEXAGONAL AVC RONDELLE	1	1				

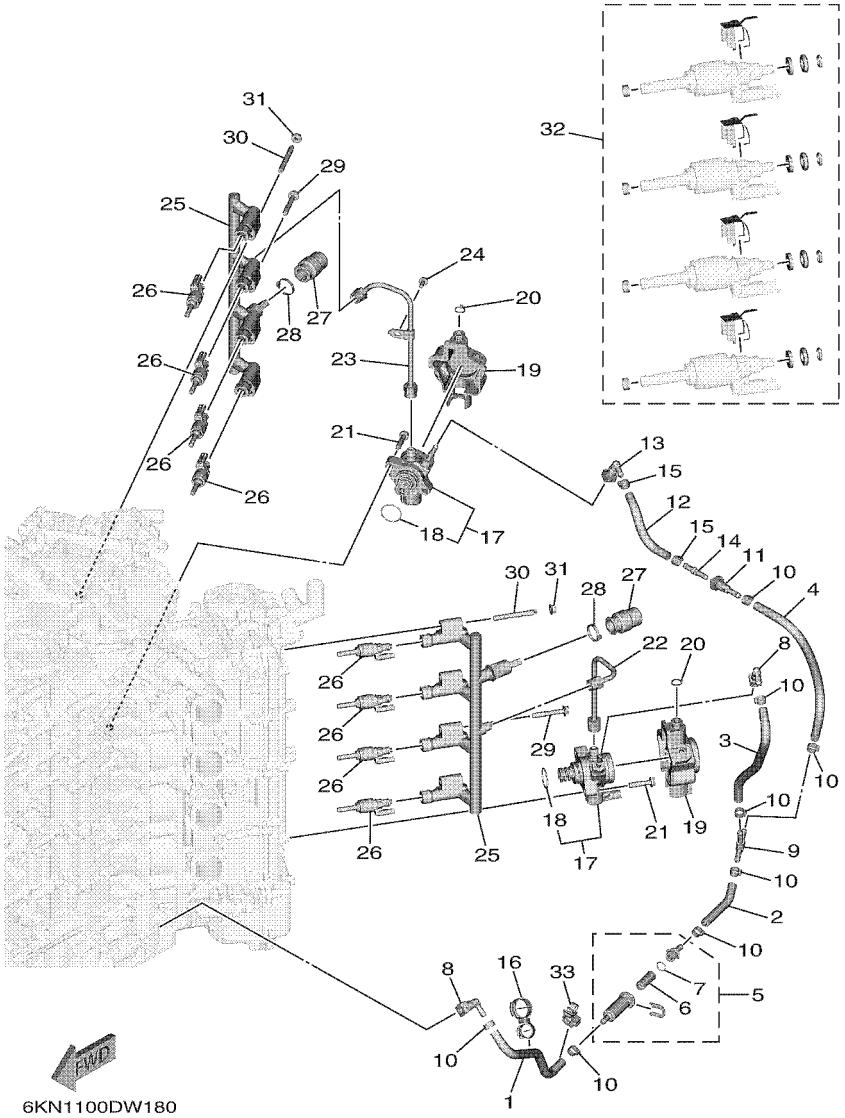

FIG. 18 FUEL 3 — CARBURANT 3

REF. NO.	PART NO. N° PIECES	DESCRIPTION DESCRIPTION	6KN3	6LB3				REMARKS REMARQUES
1	6GR–243A1–00	PIPE 15 DURITE 15	1	1				
2	6GR–243A2–00	PIPE 16 DURITE 16	1	1				
3	6GR–243A3–00	PIPE 17 DURITE 17	1	1				
4	6KN–243A1–00	PIPE 15 DURITE 15	1	1				
5	6GR–24251–00	STRAINER 1 FILTRE 1	1	1				
6	6GR–24501–00	.FILTER, FUEL .FILTRE	1	1				
7	6GR–13016–00	.O-RING .JOINT TORIQUE	1	1				
8	6AW–24300–01	FUEL PIPE JOINT DURITE RACCORDEMT. A ESSENCE	2	2				
9	6CB–24461–00	PIPE, JOINT DURITE, RACCORDEMENT	1	1				
10	90467–141A1	CLIP JONC	8	8				
11	6AW–24300–11	FUEL PIPE JOINT DURITE RACCORDEMT. A ESSENCE	1	1				
12	6KN–243A2–00	PIPE 16 DURITE 16	1	1				
13	6AW–24300–01	FUEL PIPE JOINT DURITE RACCORDEMT. A ESSENCE	1	1				
14	6KN–24461–00	PIPE, JOINT DURITE, RACCORDEMENT	1	1				
15	90467–141A1	CLIP JONC	2	2				
16	90464–29223	CLAMP BRIDE	1	1				
17	6GR–13910–00	FUEL PUMP ASSY POMPE A ESSENCE COMPLET	2	2				
18	6GR–12439–00	.O-RING .JOINT TORIQUE	1	1				
19	6GR–24595–01	PROTECTOR PROTECTEUR	2	2				
20	90465–11M10	CLAMP BRIDE	2	2				
21	97E95–08535	BOLT, HEXAGON W/W DEEP RECESS VIS HEXAGONAL AVC RONDELLE	4	4				
22	6GR–14295–00	PIPE, FUEL DURITE A ESSENCE	1	1				
23	6GR–14296–00	PIPE, FUEL 2 DURITE A ESSENCE 2	1	1				
24	95D95–06014	BOLT, FLANGE DEEP RECESS BOULON FIXATION	1	1				
25	6GR–13160–09	DELIVERY PIPE ASSY 1 ENS. TUBE DE REFOULEMENT 1	2	2				
26	6GR–13761–00	INJECTOR INJECTEUR	8	8				
27	6GR–24599–01	CAP CAPUCHON	2	2				

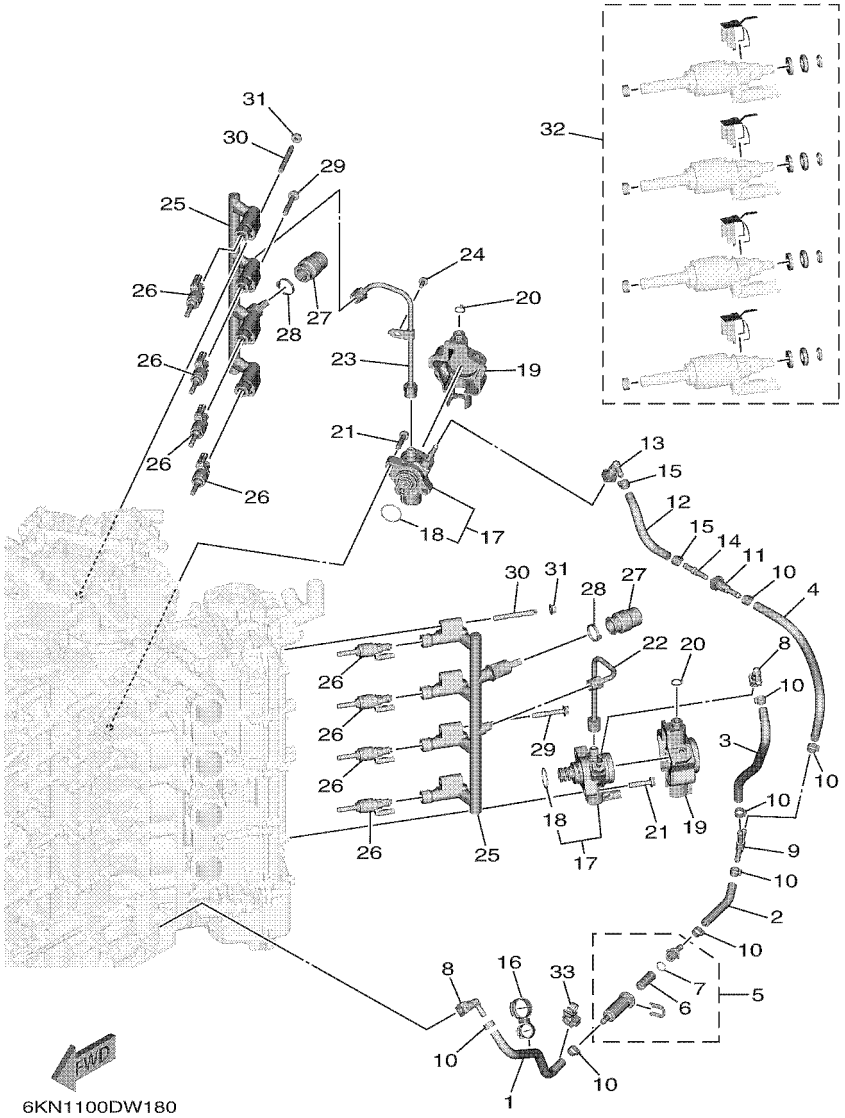

FIG. 18 FUEL 3 — CARBURANT 3

REF. NO.	PART NO. N° PIECES	DESCRIPTION DESCRIPTION	6KN3	6LB3				REMARKS REMARQUES
28	90465–13M97	CLAMP BRIDE	2	2				
29	90105–08175	BOLT, FLANGE BOULON, A COLLERETTE	4	4				
30	90116–08037	BOLT, STUD GOUJON	4	4				
31	90179–08M34	NUT ECROU	4	4				
32	6GR–W0005–00	O-RING SET JEU DE JOINTS TORIQUE	2	2				
33	90464–16015	CLAMP BRIDE	1	1				

FIG. 19 FUEL 4 — CARBURANT 4

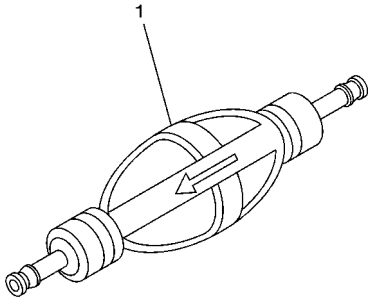

68V9110-J110

REF. NO.	PART NO. N° PIECES	DESCRIPTION DESCRIPTION	6KN3	6LB3				REMARKS REMARQUES
1	6AW–24360–02	PRIMER PUMP ASSY POMPE D'AMORCAGE	1	1				AP AP

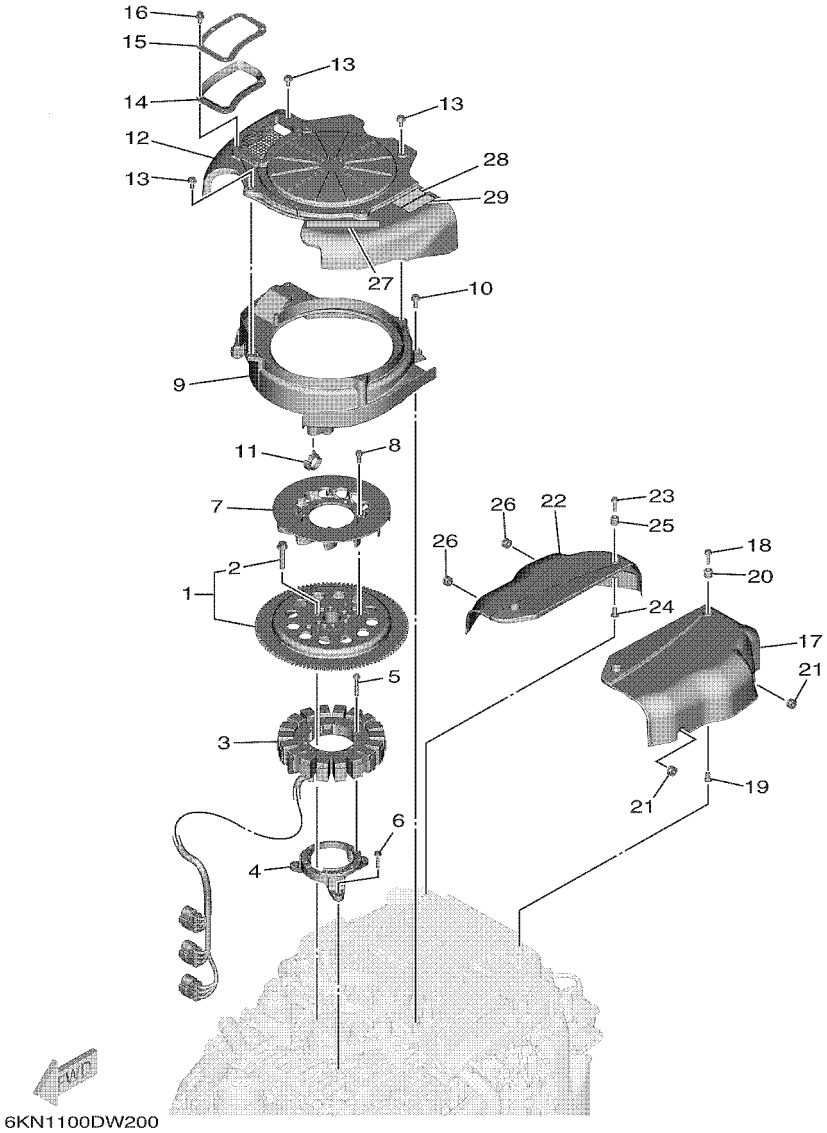

FIG. 20 GENERATOR — GENERATRICE

REF. NO.	PART NO. N° PIECES	DESCRIPTION DESCRIPTION	6KN3	6LB3				REMARKS REMARQUES
1	6KN–W8145–00	ROTOR ASSY WITH BOLTS ROTOR COMPLET AVEC BOULON	1	1				
2	6EK–W9010–00	.BOLT SET .BOULON ENS.	1	1				
3	6GR–81410–00	STATOR ASSY STATOR COMPLET	1	1				
4	6GR–85561–01	BASE, MAGNETO BASE, MAGNETO	1	1				
5	95022–06035	BOLT, FLANGE BOULON, A COLLERETTE	6	6				
6	95D95–06030	BOLT, FLANGE DEEP RECESS BOULON FIXATION	3	3				
7	6GR–85586–01	FAN VENTILATEUR	1	1				
8	97E95–06516	BOLT, HEXAGON W/W DEEP RECESS VIS HEXAGONAL AVC RONDELLE	4	4				
9	6GR–12651–00	AIR SHROUD, CYLINDER 1 COUVERCLE, CYLINDRE 1	1	1				
10	95D95–06016	BOLT, FLANGE DEEP RECESS BOULON FIXATION	3	3				
11	90464–12183	CLAMP BRIDE	1	1				
12	6GR–12653–01	AIR SHROUD, CYLINDER 3 COUVERCLE, CYLINDRE 3	1	1				
13	95D95–06012	BOLT, FLANGE DEEP RECESS BOULON FIXATION	5	5				
14	6GR–12659–00	DAMPER, AIR SHROUD 2 AMORTISSEUR, COUVERCLE 2	1	1				
15	6KN–12535–00	PLATE PLAQUE	1	1				
16	90269–05005	RIVET RIVET	5	5				
17	6GR–81942–01	COVER COUVERCLE	1	1				
18	95D95–06025	BOLT, FLANGE DEEP RECESS BOULON FIXATION	2	2				
19	90387–06119	COLLAR COLLERETTE	2	2				
20	6A0–82317–01	DAMPER, IGNITION COIL AMORTISSEUR, BOBINE D'ALLUM	2	2				
21	90480–12314	GROMMET PASSE-FIL	2	2				
22	6GR–81639–01	COVER COUVERCLE	1	1				
23	95D95–06025	BOLT, FLANGE DEEP RECESS BOULON FIXATION	2	2				
24	90387–06119	COLLAR COLLERETTE	2	2				
25	6A0–82317–01	DAMPER, IGNITION COIL AMORTISSEUR, BOBINE D'ALLUM	2	2				
26	90480–12314	GROMMET PASSE-FIL	2	2				
27	6GR–13437–61	MARK, CAUTION MAKER	1	1				

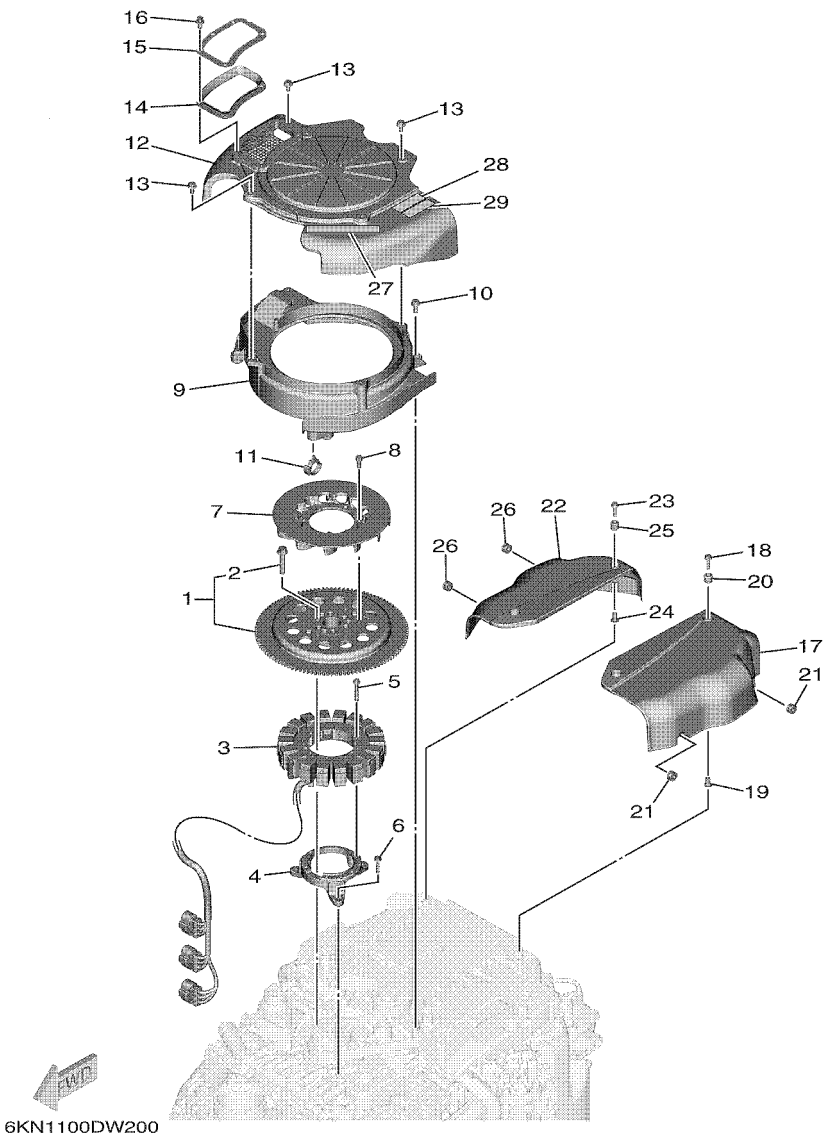

FIG. 20 GENERATOR — GENERATRICE

REF. NO.	PART NO. N° PIECES	DESCRIPTION DESCRIPTION	6KN3	6LB3				REMARKS REMARQUES
28	6EE–81994–40	LABEL, SAFETY ETIQUETTE, SECURITE	1	1				
29	6EE–81994–50	LABEL, SAFETY ETIQUETTE, SECURITE	1	1				

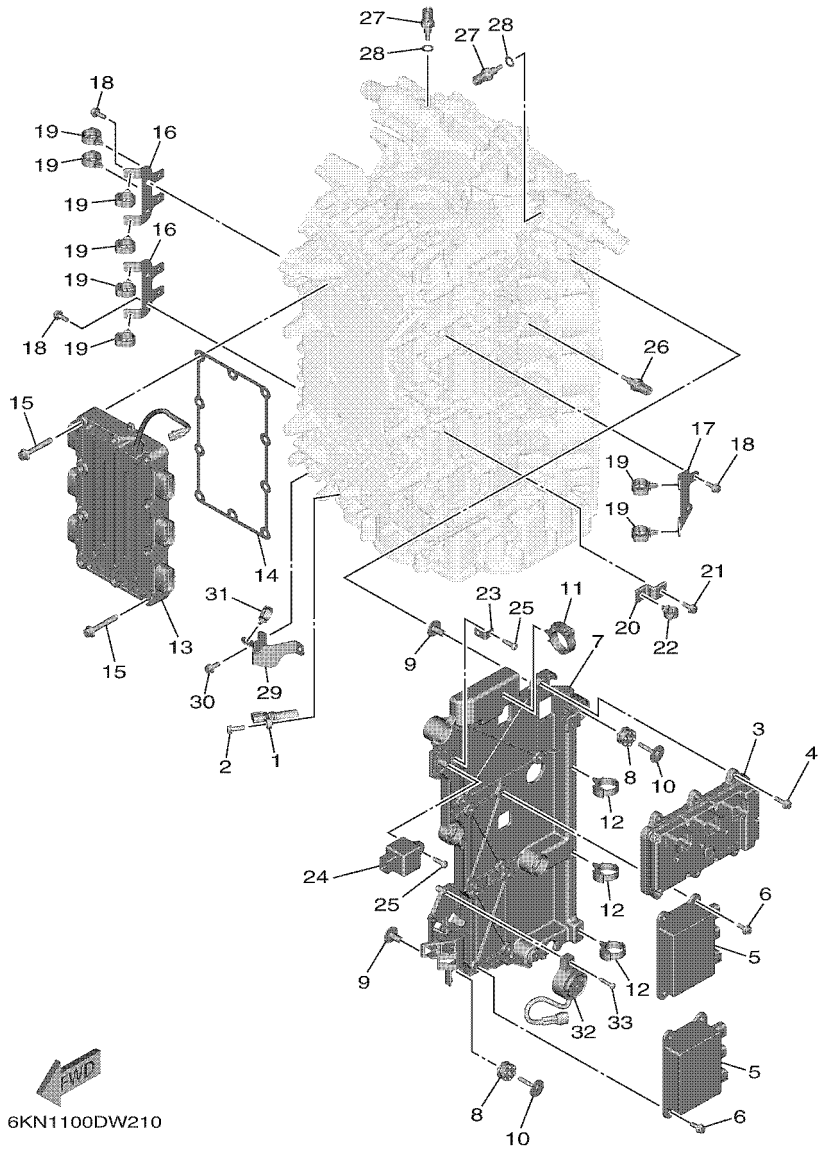

FIG. 21 ELECTRICAL 1 — PARTIE ELECTRIQUE 1

REF. NO.	PART NO. N° PIECES	DESCRIPTION DESCRIPTION	6KN3	6LB3				REMARKS REMARQUES
1	6GR–85895–00	CRANK POSITION SENSOR CAPTEUR DE POSITION MANIVELLE	1	1				
2	97E95–06520	BOLT, HEXAGON W/W DEEP RECESS VIS HEXAGONAL AVC RONDELLE	1	1				
3	6KN–8591A–00	ENGINE CONTROL UNIT ASSY BLOC DE CONTROL	1					
	6LB–8591A–00	ENGINE CONTROL UNIT ASSY BLOC DE CONTROL		1				
4	95D95–06020	BOLT, FLANGE DEEP RECESS BOULON FIXATION	4	4				
5	6GR–8591B–00	DRIVER, INJECTOR ASSY OUTIL D'INSERTION,INJECTEUR	2	2				
6	95D95–06016	BOLT, FLANGE DEEP RECESS BOULON FIXATION	8	8				
7	6GR–81948–02	BRACKET SUPPORT	1	1				
8	60V–85564–00	GROMMET RONDELLE CAOUTCHOUC	6	6				
9	90387–06176	COLLAR COLLERETTE	6	6				
10	68F–85119–00	BOLT BOULON	6	6				
11	90464–32002	CLAMP BRIDE	1	1				
12	90464–12183	CLAMP BRIDE	3	3				
13	6GR–81960–10	RECTIFIER & REGULATOR ASSY REDRESSEUR REGULATEUR CPLT	1					
	6GR–81960–00	RECTIFIER & REGULATOR ASSY REDRESSEUR REGULATEUR CPLT		1				
14	6GR–81975–00	PLATE, RECTIFIER FITTING PLAQUE, FIXATION DU REDRESSEUR	1	1				
15	90105–08175	BOLT, FLANGE BOULON, A COLLERETTE	10	10				
16	6GR–8132G–00	PLATE PLAQUE	2	2				
17	6GR–818D2–00	PLATE, 2 PLAQUE, 2	1	1				
18	95D95–06016	BOLT, FLANGE DEEP RECESS BOULON FIXATION	6	6				
19	90464–20181	CLAMP BRIDE	8	8				
20	6DA–82388–00	PLATE PLAQUETTE	1	1				
21	95D95–06016	BOLT, FLANGE DEEP RECESS BOULON FIXATION	1	1				
22	90464–13249	CLAMP BRIDE	1	1				
23	68V–85548–01	HOLDER SUPPORT	1	1				
24	68V–81950–00	RELAY ASSY RELAIS COMPLET	1	1				
25	97780–60620	SCREW, TAPPING VIS, TETE BOMBEE	2	2				

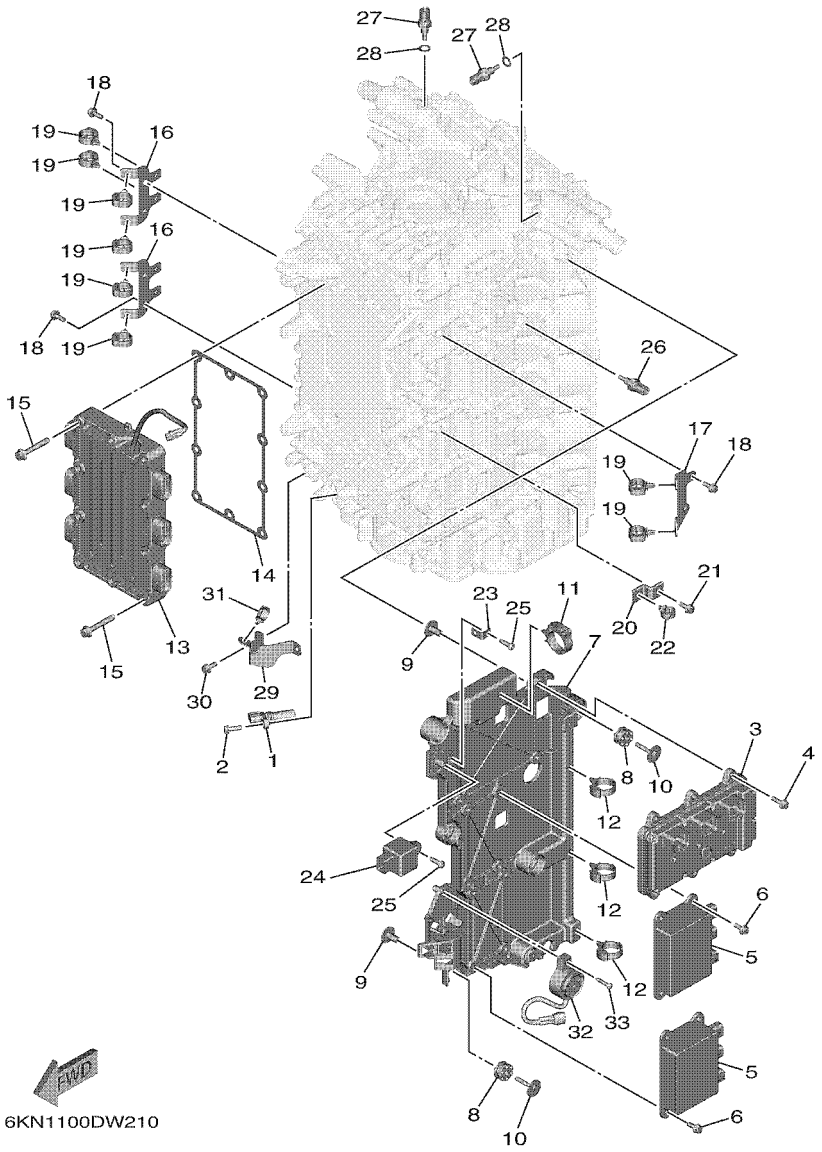

FIG. 21 ELECTRICAL 1 — PARTIE ELECTRIQUE 1

REF. NO.	PART NO. N° PIECES	DESCRIPTION DESCRIPTION	6KN3	6LB3				REMARKS REMARQUES
26	4P9–83591–00	THERMO UNIT THERMOSTAT	1	1				
27	6GR–85790–00	THERMOSENSOR ASSY SENSITOMETRE	2	2				
28	90430–10004	GASKET JOINT	2	2				
29	6GR–83614–00	BRACKET SUPPORT	1	1				
30	95D95–06016	BOLT, FLANGE DEEP RECESS BOULON FIXATION	2	2				
31	90464–13249	CLAMP BRIDE	1	1				
32	6KA–83383–01	BUZZER RONFLEUR	1	1				
33	97780–50625	SCREW, TAPPING VIS, TETE BOMBEE	1	1				

FIG. 22 ELECTRICAL 2 — PARTIE ELECTRIQUE 2

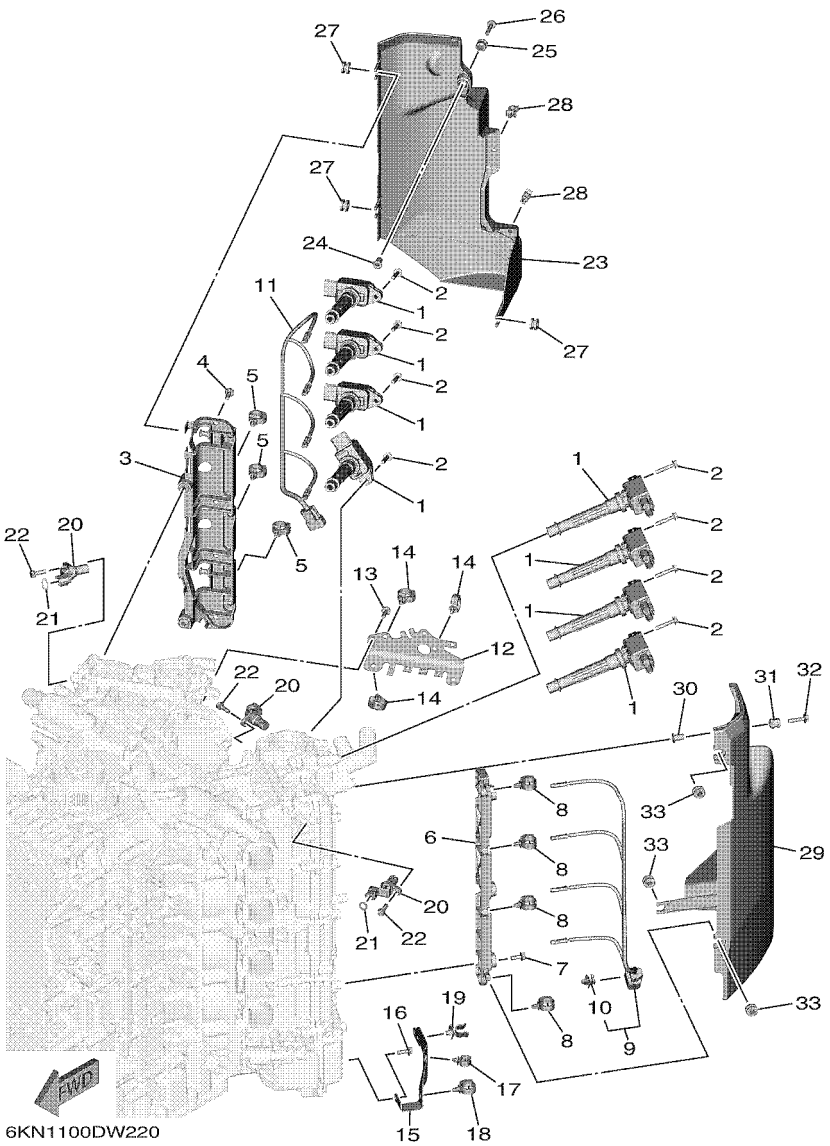

REF. NO.	PART NO. N° PIECES	DESCRIPTION DESCRIPTION	6KN3	6LB3				REMARKS REMARQUES
1	6GR–82310–03	IGNITION COIL ASSY BOBINE D'ALLUMAGE	8	8				
2	90105–06028	BOLT, FLANGE BOULON, A COLLERETTE	8	8				
3	6GR–8272F–01	PLATE, GUIDE 1 PLAQUE, GUIDE 1	1	1				
4	95D95–06016	BOLT, FLANGE DEEP RECESS BOULON FIXATION	5	5				
5	90464–20181	CLAMP BRIDE	3	3				
6	6GR–8272G–01	PLATE, GUIDE 2 PLAQUE, GUIDE 2	1	1				
7	95D95–06016	BOLT, FLANGE DEEP RECESS BOULON FIXATION	3	3				
8	90464–20181	CLAMP BRIDE	4	4				
9	6GR–82386–00	EXTENSION, WIRE HARNESS EXTENSION, FAISCEAU	1	1				
10	90464–09M47	.CLAMP .BRIDE	1	1				
11	6GR–82386–10	EXTENSION, WIRE HARNESS EXTENSION, FAISCEAU	1	1				
12	6GR–82388–01	PLATE PLAQUETTE	1	1				
13	95D95–06016	BOLT, FLANGE DEEP RECESS BOULON FIXATION	2	2				
14	90464–20181	CLAMP BRIDE	3	3				
15	6GR–82389–00	PLATE 2 PLAQUETTE 2	1	1				
16	95D95–06016	BOLT, FLANGE DEEP RECESS BOULON FIXATION	3	3				
17	90464–13249	CLAMP BRIDE	1	1				
18	90464–20181	CLAMP BRIDE	1	1				
19	90464–12015	CLAMP BRIDE	1	1				
20	6GR–85896–00	SENSOR, CAM POSITION SONDE DE CAME	3	3				
21	93210–11001	O-RING JOINT TORIQUE	2	2				
22	97E95–06520	BOLT, HEXAGON W/W DEEP RECESS VIS HEXAGONAL AVC RONDELLE	3	3				
23	6GR–11186–01	COVER, CYLINDER HEAD SIDE 2 COUVERCLE LATERAL DE CULASSE 2	1	1				
24	90387–06119	COLLAR COLLERETTE	1	1				
25	6A0–82317–01	DAMPER, IGNITION COIL AMORTISSEUR, BOBINE D'ALLUM	1	1				
26	95D95–06025	BOLT, FLANGE DEEP RECESS BOULON FIXATION	1	1				
27	90480–12314	GROMMET PASSE-FIL	3	3				

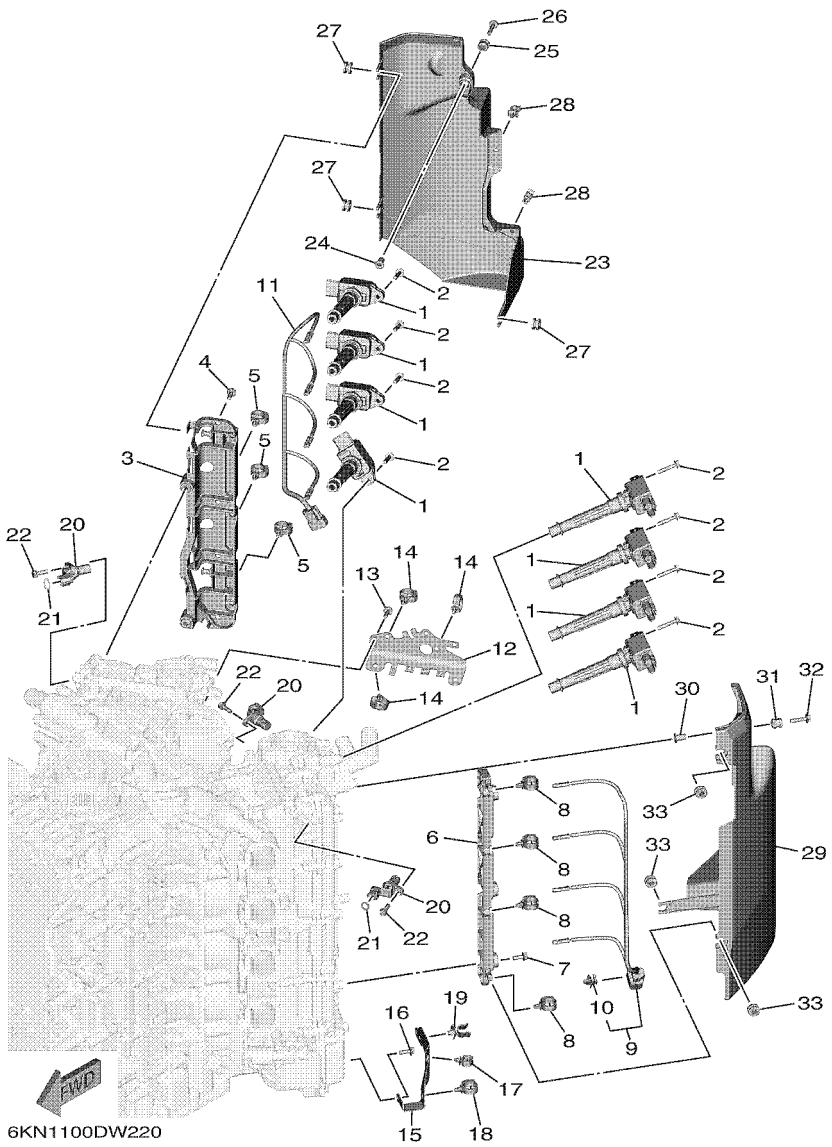

FIG. 22 ELECTRICAL 2 — PARTIE ELECTRIQUE 2

REF. NO.	PART NO. N° PIECES	DESCRIPTION DESCRIPTION	6KN3	6LB3				REMARKS REMARQUES
28	90464–09129	CLAMP BRIDE	2	2				
29	6GR–11187–01	COVER, CYLINDER HEAD SIDE 3 COUVERCLE LATERAL DE CULASSE 3	1	1				
30	90387–06119	COLLAR COLLERETTE	1	1				
31	6A0–82317–01	DAMPER, IGNITION COIL AMORTISSEUR, BOBINE D'ALLUM	1	1				
32	95D95–06025	BOLT, FLANGE DEEP RECESS BOULON FIXATION	1	1				
33	90480–12314	GROMMET PASSE-FIL	3	3				

FIG. 23 ELECTRICAL 3 — PARTIE ELECTRIQUE 3

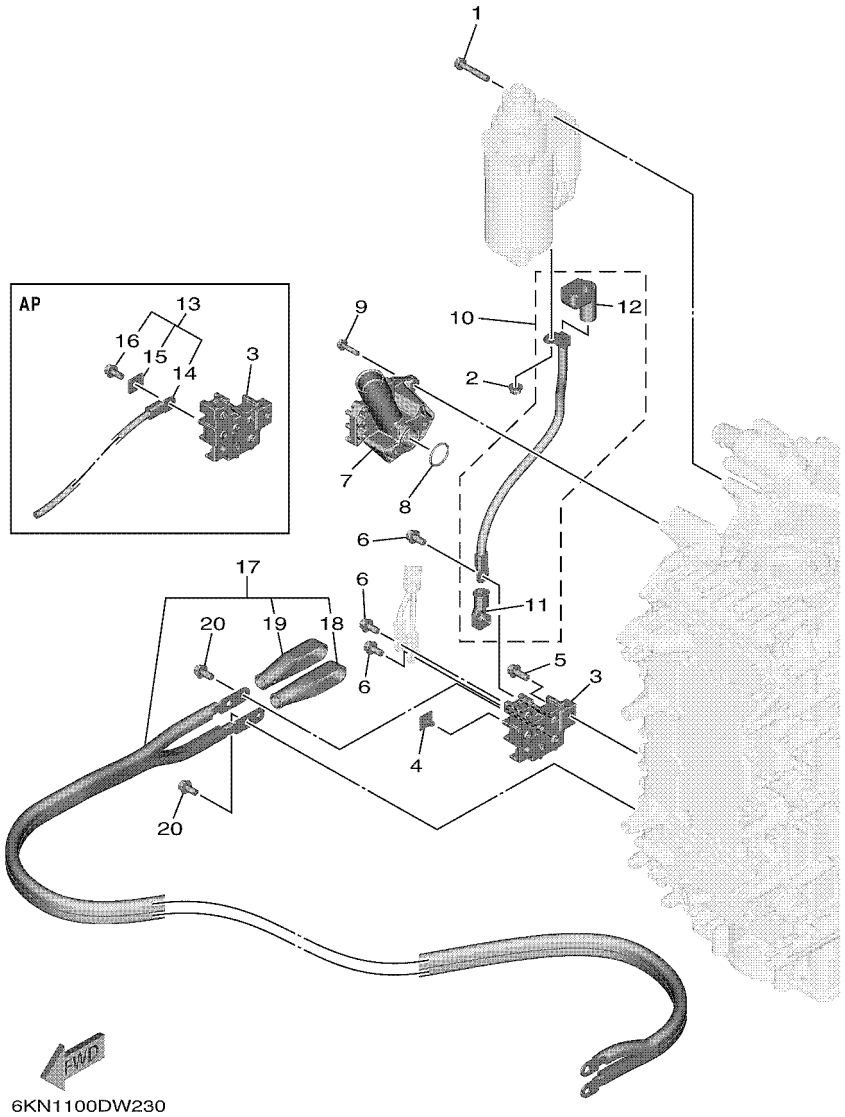

REF. NO.	PART NO. N° PIECES	DESCRIPTION DESCRIPTION	6KN3	6LB3				REMARKS REMARQUES
1	97513–08545	BOLT, WITH WASHER VIS HEXAGONAL AVC RONDELLE	3	3				
2	90179–08003	NUT ECROU	1	1				
3	6GR–81925–00	TERMINAL BORNE	1	1				
4	6GR–81916–00	COVER, TERMINAL COUVERCLE, BORNE	1	1				
5	95D95–08020	BOLT, FLANGE DEEP RECESS BOULON FIXATION	2	2				
6	95D95–08016	BOLT, FLANGE DEEP RECESS BOULON FIXATION	3	3				
7	6GR–81929–00–9S	BRACKET, TERMINAL SUPPORT	1	1				
8	93210–27370	O-RING JOINT TORIQUE	1	1				
9	95D95–06025	BOLT, FLANGE DEEP RECESS BOULON FIXATION	3	3				
10	6GR–82117–01	WIRE, LEAD FIL	1	1				
11	6GR–82119–10	.COVER, LEAD WIRE .GARNITURE, FIL	1	1				
12	6AW–82119–11	.COVER, LEAD WIRE .GARNITURE, FIL	1	1				
13	6GR–762W0–01	WIRE HARNESS KIT FAISCEAU DE FILS COMPLET	1	1				ASK TO MARINE DIV ASK TO MARINE DIV
14	6GR–81949–01	.WIRE, LEAD (ISOLATOR, 3.8M) .FIL (ISOLATOR, 3.8M)	1	1				
15	6P2–81923–00	.WASHER .RONDELLE	1	1				
16	95D95–08016	.BOLT, FLANGE DEEP RECESS .BOULON FIXATION	1	1				
17	6GR–82105–02	WIRE HARNESS FAISCEAU DE FILS	1	1				AP AP
18	6AW–82119–00	.COVER, LEAD WIRE .GARNITURE, FIL	1	1				
19	6AW–82119–20	.COVER, LEAD WIRE .GARNITURE, FIL	1	1				
20	95D95–08016	BOLT, FLANGE DEEP RECESS BOULON FIXATION	3	3				AP AP

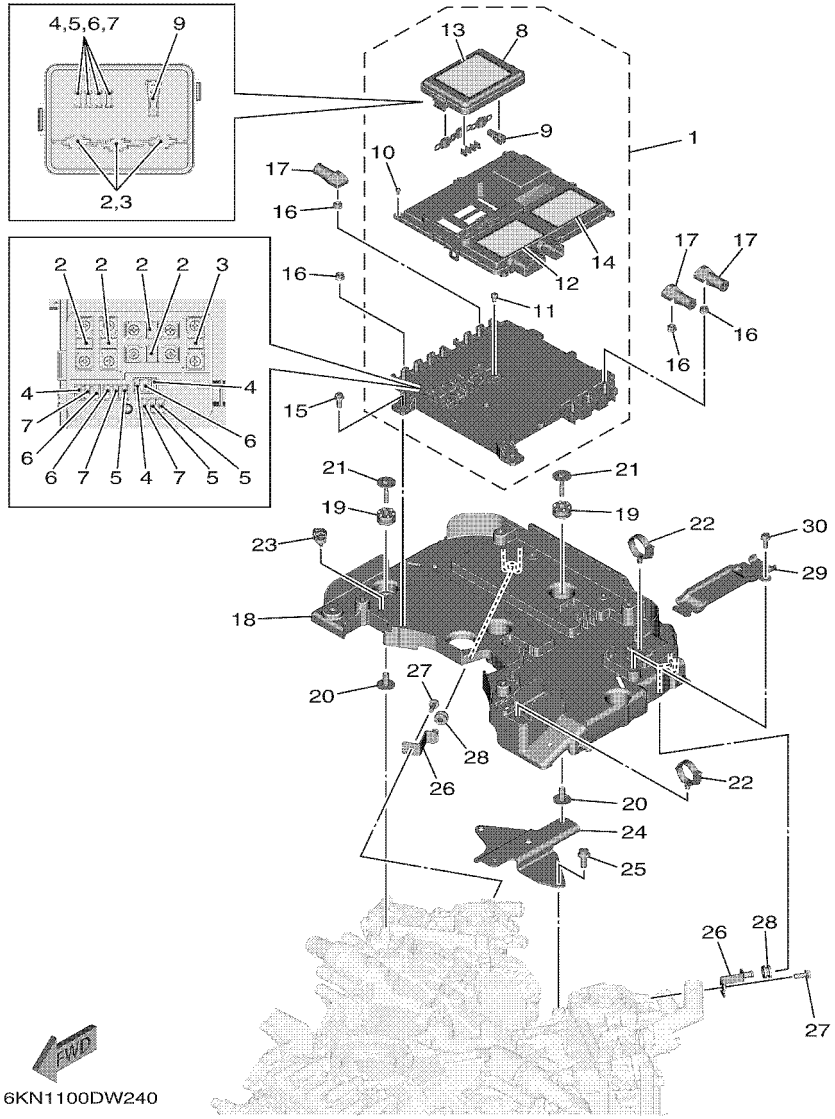

FIG. 24 ELECTRICAL 4 — PARTIE ELECTRIQUE 4

REF. NO.	PART NO. N° PIECES	DESCRIPTION DESCRIPTION	6KN3	6LB3				REMARKS REMARQUES
1	6GR–W85AA–02	ELECTRIC POWER MANAGEMENT UNIT UNITE DE ELECTRIQUE PUISSANCE	1	1				
2	6GR–82151–10	.FUSE (70A) .FUSIBLE (70A)	6	6				
3	6GR–82151–00	.FUSE (100A) .FUSIBLE (100A)	2	2				
4	6CB–82151–00	.FUSE (10A) .FUSIBLE (10A)	4	4				
5	6CB–82151–10	.FUSE (15A) .FUSIBLE (15A)	4	4				
6	6CB–82151–20	.FUSE (20A) .FUSIBLE (20A)	4	4				
7	6CB–82151–30	.FUSE (30A) .FUSIBLE (30A)	4	4				
8	6GR–85544–00	.CASE .BOITIER	1	1				
9	6CB–2812A–00	.PULLER, FUSE .TENDEUR, FUSIBLE	1	1				
10	6P2–82113–00	.SCREW (M3) .VIS (M3)	7	7				
11	68F–82846–00	.SCREW, PAN HEAD (M5) .VIS, TETE TRONCONIQUE (M5)	10	10				
12	6GR–81919–01	.GRAPHIC, REGULATOR .ADHESIF, REGULATEUR	1	1				
13	6GR–81919–11	.GRAPHIC, REGULATOR .ADHESIF, REGULATEUR	1	1				
14	6GR–81919–20	.GRAPHIC, REGULATOR .ADHESIF, REGULATEUR	1	1				
15	95D95–06016	BOLT, FLANGE DEEP RECESS BOULON FIXATION	4	4				
16	95780–06500	NUT, FLANGE ECROU	10	10				
17	6GR–82119–00	COVER, LEAD WIRE GARNITURE, FIL	3	3				
18	6GR–82589–00	PROTECTER, WIRE HARNESS PROTECTEUR, FAISCEAU DE FILS	1	1				
19	68F–85516–01	SPACER ENTRETOISE	4	4				
20	90387–06176	COLLAR COLLERETTE	4	4				
21	68F–85119–00	BOLT BOULON	4	4				
22	90464–30001	CLAMP BRIDE	2	2				
23	90464–13249	CLAMP BRIDE	1	1				
24	6KN–82171–00	STAY, FUSE BOX SUPPORT, BOITE A FUSIBLES	1	1				
25	95D95–08020	BOLT, FLANGE DEEP RECESS BOULON FIXATION	2	2				
26	6GR–8272U–00	PLATE, JOINT PLAQUE, RACCORD	2	2				
27	95D95–06016	BOLT, FLANGE DEEP RECESS BOULON FIXATION	2	2				

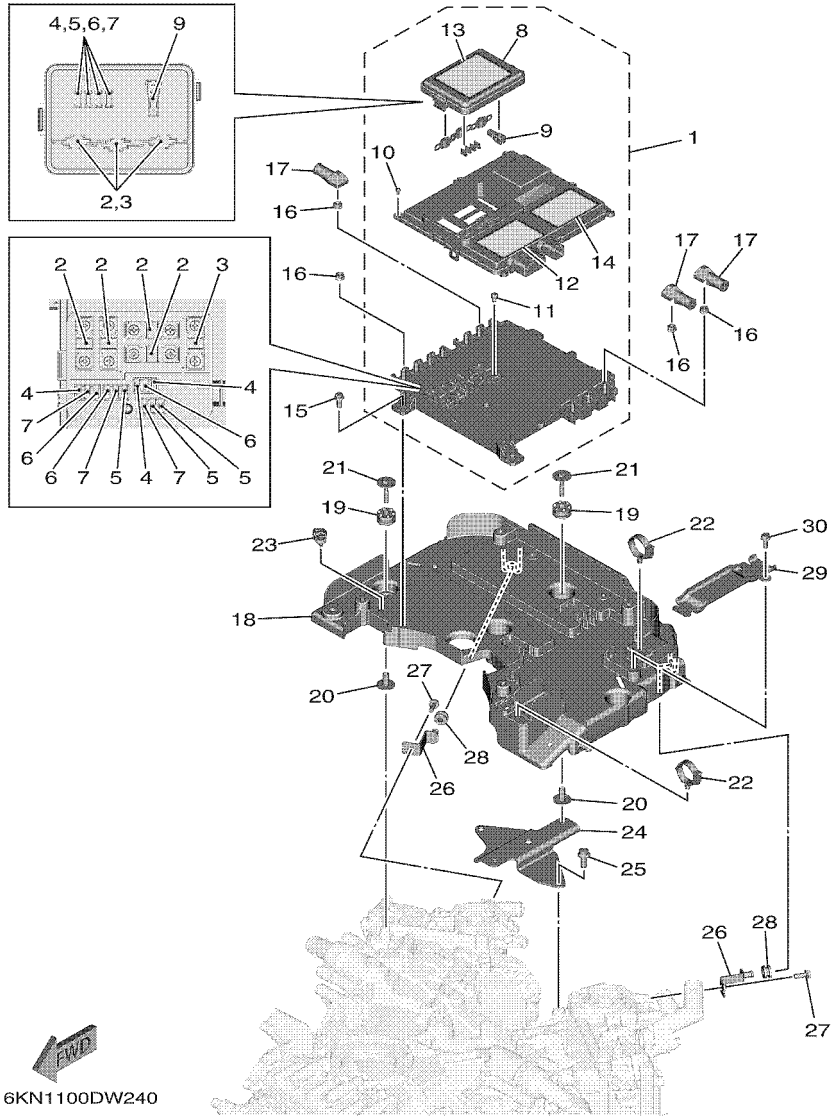

6KN1100DW240

FIG. 24 ELECTRICAL 4 — PARTIE ELECTRIQUE 4

REF. NO.	PART NO. N° PIECES	DESCRIPTION DESCRIPTION	6KN3	6LB3				REMARKS REMARQUES
28	90480–12314	GROMMET PASSE-FIL	2	2				
29	6GR–85525–00	COVER CAPUCHON	1	1				
30	95D95–06016	BOLT, FLANGE DEEP RECESS BOULON FIXATION	1	1				

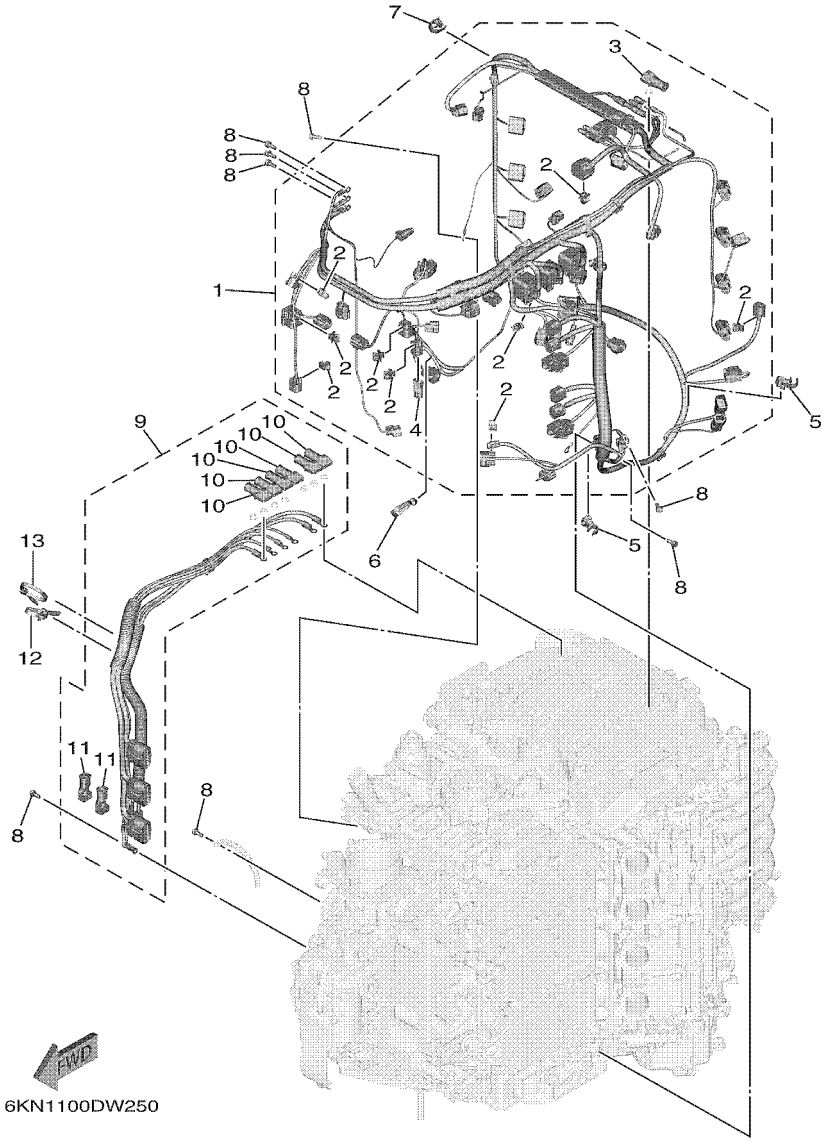

FIG. 25 ELECTRICAL 5 — PARTIE ELECTRIQUE 5

REF. NO.	PART NO. N° PIECES	DESCRIPTION DESCRIPTION	6KN3	6LB3				REMARKS REMARQUES
1	6KN–82590–01	WIRE HARNESS ASSY FAISCEAU DE FILS COMPLET	1					
	6LB–82590–01	WIRE HARNESS ASSY FAISCEAU DE FILS COMPLET		1				
2	90464–09M47	.CLAMP .BRIDE	9	9				
3	6GR–82119–00	.COVER, LEAD WIRE .GARNITURE, FIL	1	1				
4	68V–82582–10	.CAP 1 (2P) .COUVERCLE 1 (2P)	1	1				
5	90464–12012	CLAMP BRIDE	2	2				
6	90465–13M24	CLAMP BRIDE	1	1				
7	90464–18004	CLAMP BRIDE	1	1				
8	97E95–06516	BOLT, HEXAGON W/W DEEP RECESS VIS HEXAGONAL AVC RONDELLE	8	8				
9	6GR–8259M–00	WIRE HARNESS ASSY 2 FAISCEAU DE FILS	1	1				
10	6GR–82119–00	.COVER, LEAD WIRE .GARNITURE, FIL	6	6				
11	6GR–82119–10	.COVER, LEAD WIRE .GARNITURE, FIL	2	2				
12	90464–44002	CLAMP BRIDE	1	1				
13	90464–15195	CLAMP BRIDE	1	1				

FIG. 26 ELECTRICAL 6 — PARTIE ELECTRIQUE 6

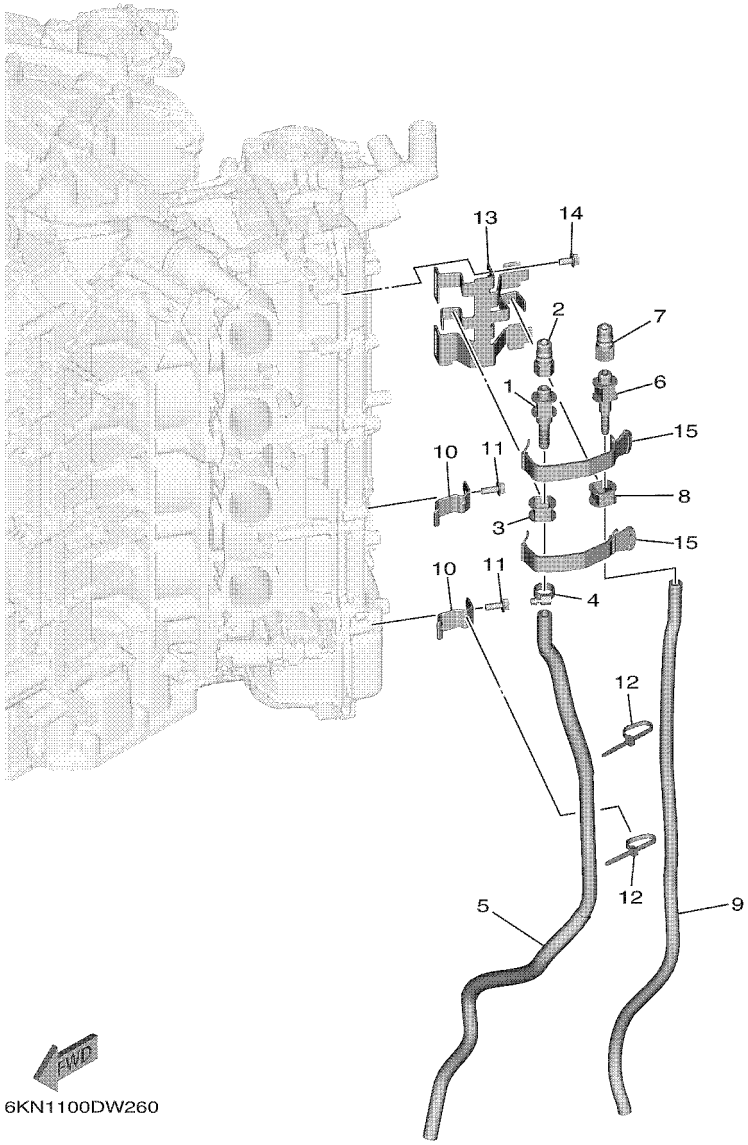

6KN1100DW260

REF. NO.	PART NO. N° PIECES	DESCRIPTION DESCRIPTION	6KN3	6LB3				REMARKS REMARQUES
1	6GR–45394–01	HOSE, FITTING 1 TUYAU, RACCORD 1	1	1				
2	6GR–45393–00	COUPLER COUPLEUR	1	1				
3	6GR–81662–00	COVER, CONNECTER COUVERCLE, CONNECTEUR	1	1				
4	90450–14M05	HOSE CLAMP ASSY BRIDE, DE DURITE	1	1				
5	6GR–4383E–01	HOSE, OIL 2 DURITE A HUILE	1	1				
6	6GR–45395–00	HOSE, FITTING 2 TUYAU, RACCORD 2	1	1				
7	6GR–45393–00	COUPLER COUPLEUR	1	1				
8	6GR–82599–00	COVER, CONNECTOR COUVERCLE, CONNECTEUR	1	1				
9	6GR–2318K–00	HOSE, AIR 2 TUYAU, A AIR 2	1	1				
10	6GR–81443–00	CLAMP, LEAD 1 BRIDE, FIL 1	2	2				
11	95D95–06016	BOLT, FLANGE DEEP RECESS BOULON FIXATION	2	2				
12	90465–13M97	CLAMP BRIDE	2	2				
13	6GR–81845–00	PLATE PLAQUE	1	1				
14	95D95–06012	BOLT, FLANGE DEEP RECESS BOULON FIXATION	2	2				
15	6GR–82131–01	BAND, BATTERY BANDE, DE BATTERIE	2	2				

FIG. 27 ELECTRICAL 7 — PARTIE ELECTRIQUE 7

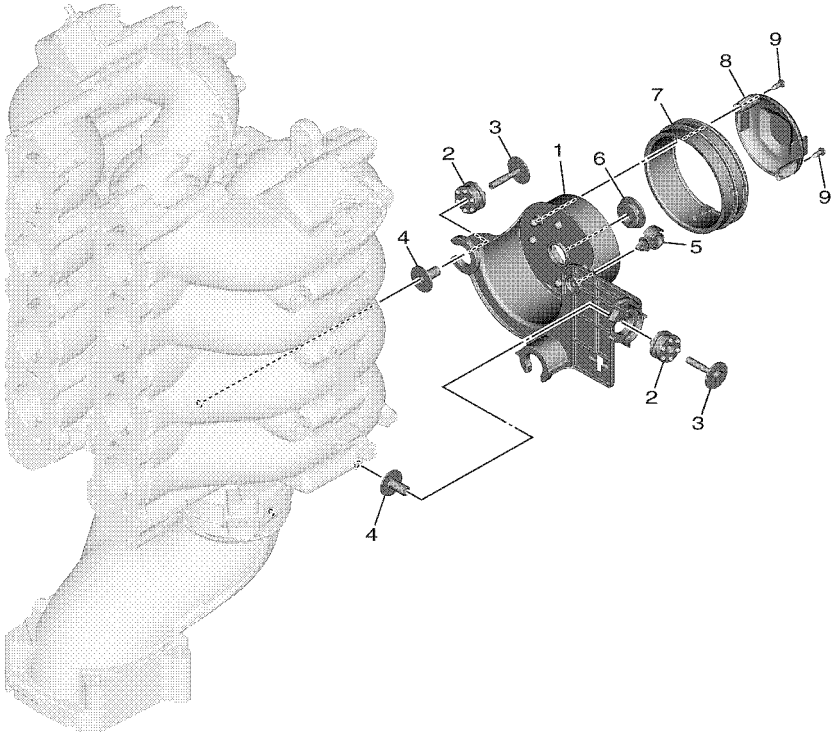

6KN1100DW270

REF. NO.	PART NO. N° PIECES	DESCRIPTION DESCRIPTION	6KN3	6LB3				REMARKS REMARQUES
1	6KN–85112–00	BRACKET, REFLECTOR 1 SUPPORT, CATADIOPTRE 1	1	1				
2	68F–85516–01	SPACER ENTRETOISE	3	3				
3	68F–85119–00	BOLT BOULON	3	3				
4	90387–06176	COLLAR COLLERETTE	3	3				
5	90464–13249	CLAMP BRIDE	1	1				
6	676–42726–00	GROMMET PASSE-FIL	1	1				
7	6KN–41273–00	GROMMET PASSE-FIL	1	1				
8	6KN–42532–00	COVER COUVERCLE	1	1				
9	97780–40112	SCREW, OVAL HEAD TAPPING VIS, TETE BOMBEE	2	2				

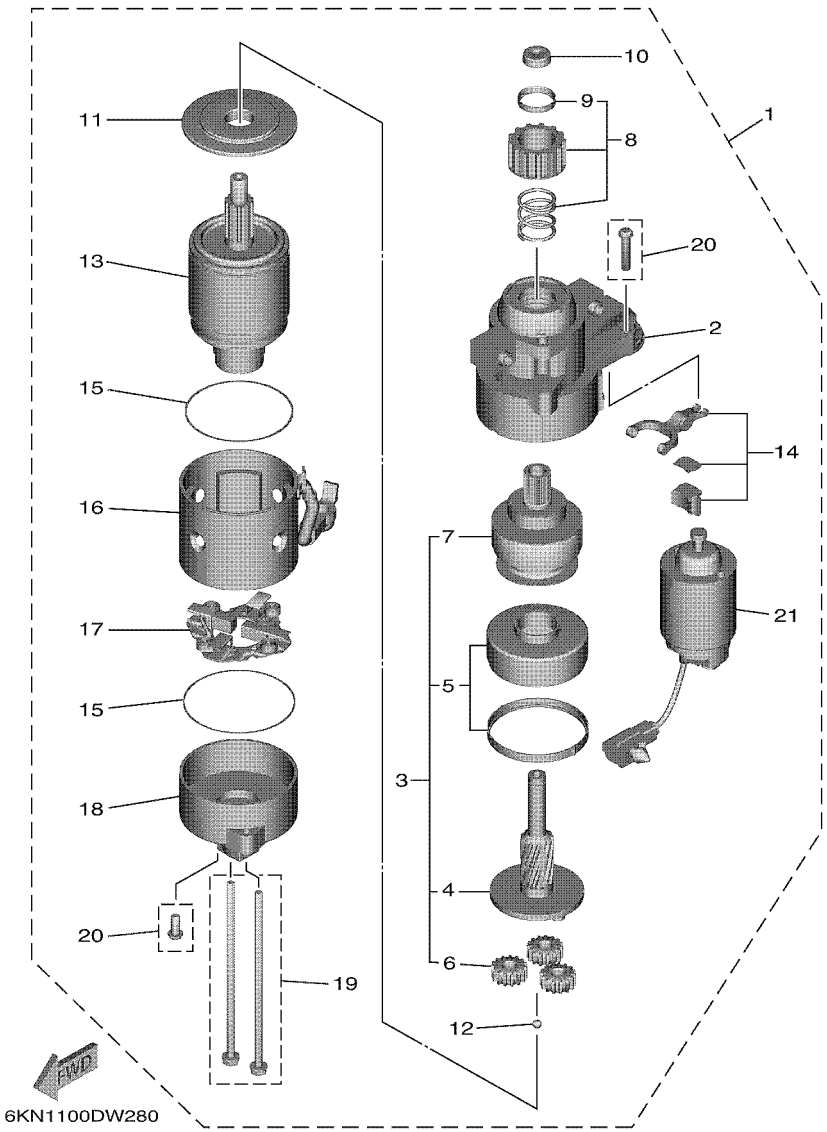

FIG. 28 STARTING MOTOR — DEMARREUR ELECTRIQUE

REF. NO.	PART NO. N° PIECES	DESCRIPTION DESCRIPTION	6KN3	6LB3				REMARKS REMARQUES
1	6AW–81800–01	STARTING MOTOR ASSY DEMARREUR ELECTRIQUE COMPLET	1	1				
2	6AW–81830–00	.FRONT BRACKET ASSY .SUPPORT AVANT	1	1				
3	6AW–81807–01	.GEAR ASSY, STARTING MOTOR .PIGNON, DEMARREUR ELECTRIQUE	1	1				
4	6AW–81836–00	..SHAFT, PINION ..AXE, PIGNON	1	1				
5	6AW–81891–01	..GEAR, RING ..ROUE DENTEE	1	1				
6	6AW–8183T–00	..GEAR, IDLER ..PIGNON, INTERMEDIAIRE	3	3				
7	6AW–81832–00	..CLUTCH, OVER RUN ..EMBRAYAGE, ROUE LIBRE	1	1				
8	6AW–81808–00	.PINION ASSY .PIGNON	1	1				
9	6AW–81857–00	..PINION STOPPER SET ..BUTEE PIGNON	1	1				
10	6AW–81862–00	.CAP .COUVERCLE	1	1				
11	6AW–8183R–01	.PLATE .PLAQUE	1	1				
12	6AW–81854–00	.BALL, STEEL .BALLE, ACIER	1	1				
13	6AW–81850–00	.ARMATURE ASSY .INDUIT	1	1				
14	6AW–81839–00	.LEVER ASSY .LEVIER COMPLET	1	1				
15	6AW–81842–00	.PACKING .JOINTS	2	2				
16	6AW–81810–00	.STATOR ASSY .STATOR COMPLET	1	1				
17	6AW–81840–00	.BRUSH HOLDER ASSY .SUPPORT DE CHARBON	1	1				
18	6AW–81820–00	.REAR BRACKET ASSY .SUPPORT ARRIERE COMPLET	1	1				
19	6AW–81826–00	.BOLT .BOULON	1	1				
20	6AW–81846–00	.SCREW .VIS	1	1				
21	6AW–81941–00	.STARTER RELAY ASSY .LANCEUR RELAIS (ENS.)	1	1				

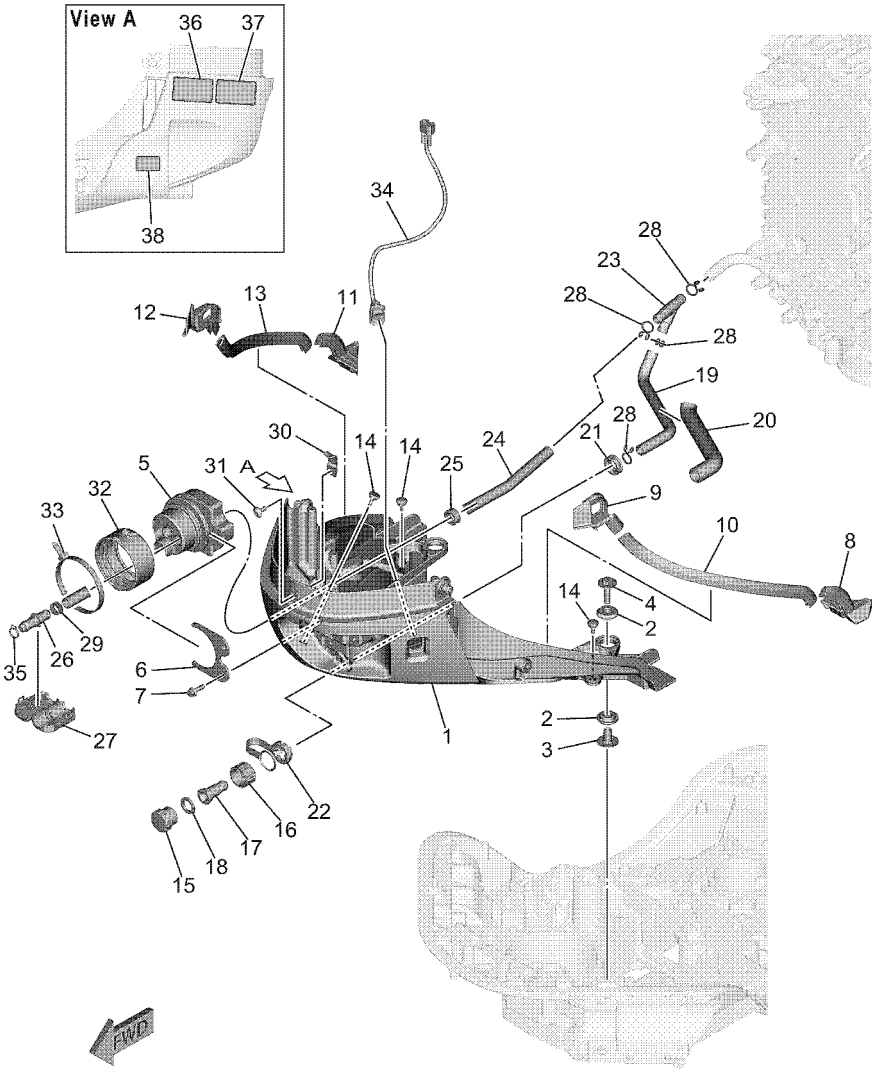

6KN210EDX290

FIG. 29 BOTTOM COWLING 1 — CAPOT INFERIEUR 1

REF. NO.	PART NO. N° PIECES	DESCRIPTION DESCRIPTION	6KN3	6LB3				REMARKS REMARQUES
1	6KN–42711–00–8D	COWLING, BOTTOM 1 CUVETTE 1	1	1				UR GRAY UR GRAY
	6KN–42711–00–CE	COWLING, BOTTOM 1 CUVETTE 1	1	1				UR WHITE UR WHITE
2	90480–22M81	GROMMET PASSE-FIL	4	4				
3	90387–08M37	COLLAR COLLERETTE	2	2				
4	90119–08187	BOLT, WITH WASHER BOULON, AVEC RONDELLE	2	2				
5	6GR–42725–02	GROMMET PASSE-FIL	1	1				
6	6GR–42761–00	STOPPER PLAQUETTE	1	1				
7	95D95–06020	BOLT, FLANGE DEEP RECESS BOULON FIXATION	2	2				
8	6KN–42717–00	RUBBER, SEAL 2 JOINT EN CAOUTCHOUC 2	1	1				
9	6KN–42726–00	GROMMET PASSE-FIL	1	1				
10	6KN–42617–00	DAMPER, FORM BOURRELET, CAOUTCHOUC	1	1				
11	6KN–42718–00	RUBBER, SEAL 3 JOINT	1	1				
12	6KN–42727–00	GROMMET PASSE-FIL	1	1				
13	6KN–42617–00	DAMPER, FORM BOURRELET, CAOUTCHOUC	1	1				
14	6H4–42748–01	GROMMET PASSE-FIL	3	3				
15	6KN–11313–00	PLUG, BLIND PLOT, BORGNE	1	1				
16	6R3–12581–00	JOINT, HOSE 1 JOINT DE TUYAU	1	1				
17	6KN–12582–00	JOINT, HOSE 2 RACCORD DE TUYAU 1	1	1				
18	6R3–12583–00	GASKET, HOSE JOINT JOINT	1	1				
19	6KN–12577–00	HOSE 2 TUYAU 2	1	1				
20	6KN–12578–00	HOSE 3 TUYAU 3	1	1				
21	6KN–82535–00	GROMMET RONDELLE CAOUTCHOUC	1	1				
22	6KN–26393–00	HOLDER SUPPORT	1	1				
23	6GR–24378–10	PIPE, JOINT 3 DURITE RACCORDEMENT 3	1	1				
24	90445–16025	HOSE (L290) DURITE (L290)	1	1				
25	90480–20M05	GROMMET PASSE-FIL	1	1				
26	6GR–83558–00	END, NIPPLE RACCORD DE NIPPLE	1	1				

FIG. 29 BOTTOM COWLING 1 — CAPOT INFERIEUR 1

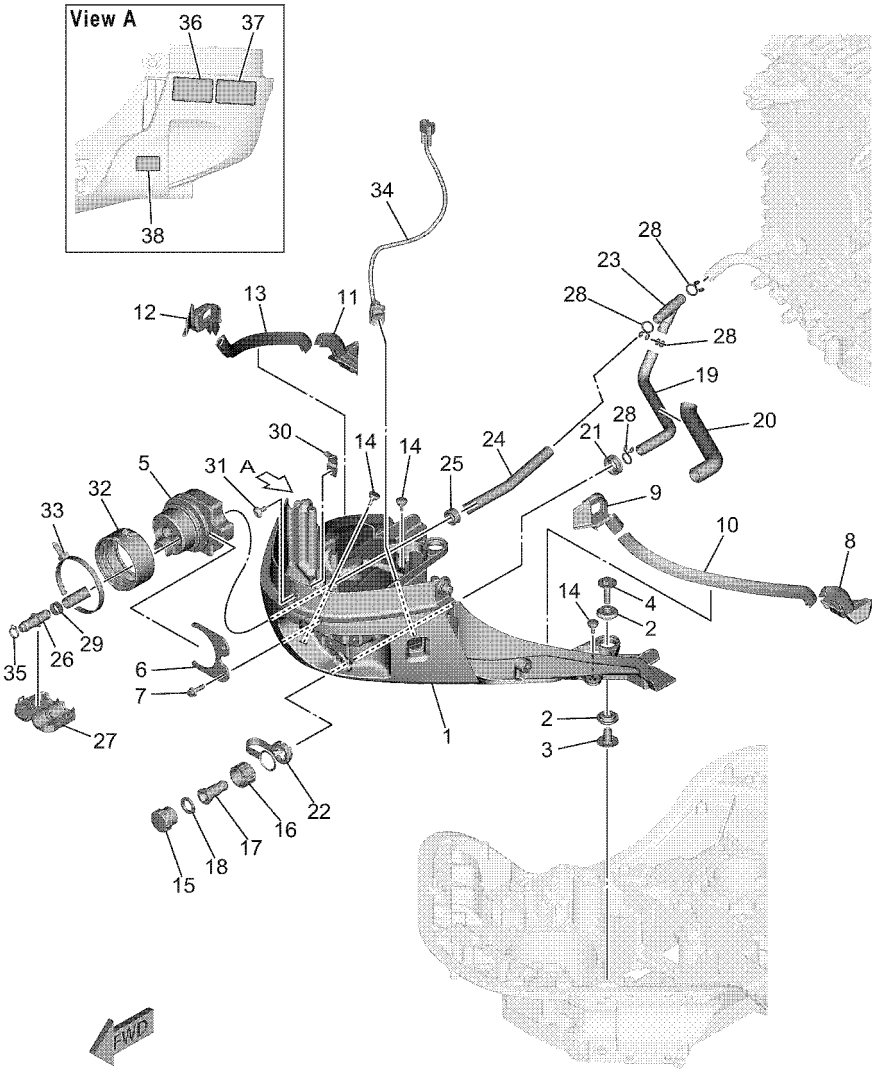

6KN210EDX290

REF. NO.	PART NO. N° PIECES	DESCRIPTION DESCRIPTION	6KN3	6LB3				REMARKS REMARQUES
27	6GR–24452–00	COVER COUVERCLE	1	1				
28	90467–160A7	CLIP JONC	4	4				
29	90467–150A5	CLIP JONC	1	1				
30	6GR–44554–00	PLATE PLAQUETTE	1	1				
31	90111–06144	BOLT, HEXAGON SOCKET BUTTON BOULON	1	1				
32	6GR–42753–00	FASTNER ATTACHE	1	1				AP AP
33	90464–99006	CLAMP BRIDE	1	1				AP AP
34	6GR–82563–00	TRIM & TILT SWITCH ASSY INCLINER ET PARER COMMUTATEUR	1	1				
35	90460–15227	CLAMP, HOSE BRIDE, DE DURITE	1	1				AP AP
36	6EE–42794–40	LABEL, WARNING (GENERAL) ETIQUETTE, AVERTISSEMENT	1	1				
37	6EE–42794–50	LABEL, WARNING (GENERAL) ETIQUETTE, AVERTISSEMENT	1	1				
38	6AH–81996–00	MARK MARQUE	1	1				

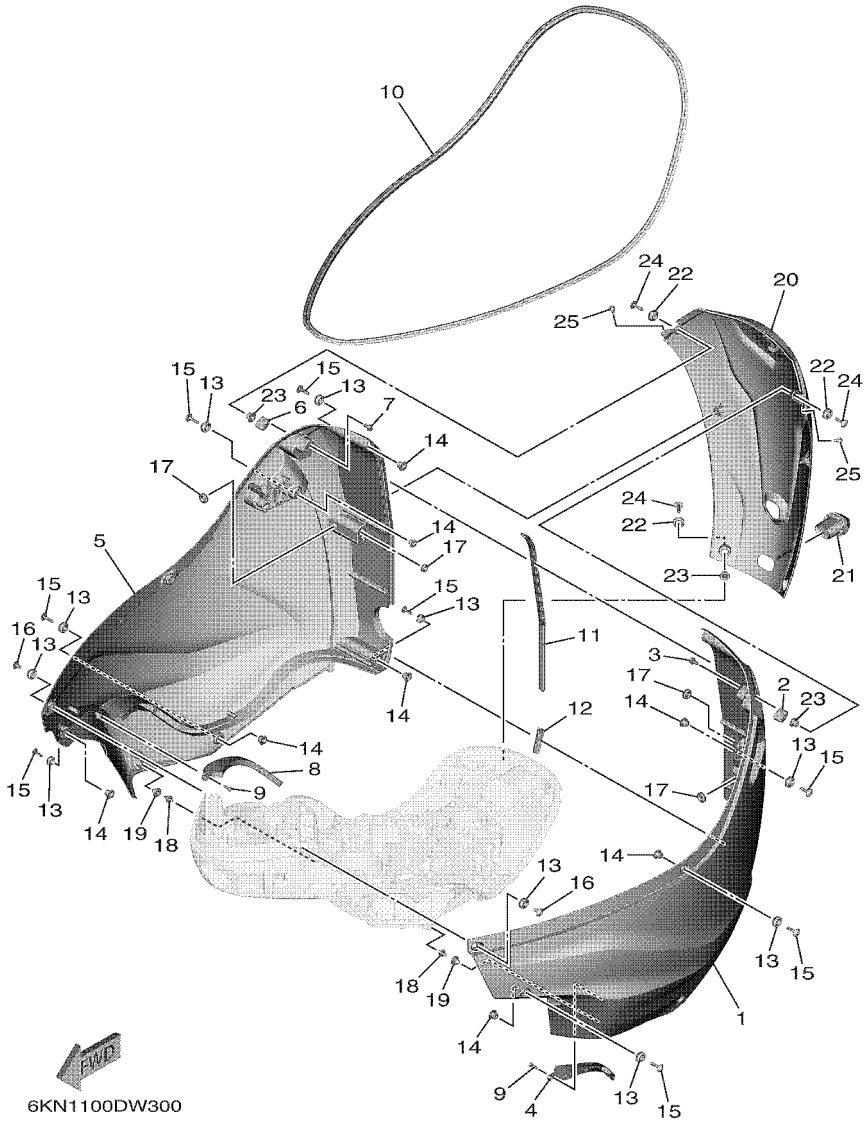

FIG. 30 BOTTOM COWLING 2 — CAPOT INFERIEUR 2

REF. NO.	PART NO. N° PIECES	DESCRIPTION DESCRIPTION	6KN3	6LB3				REMARKS REMARQUES
1	6KN–42712–00–8D	COWLING, BOTTOM 2 CUVETTE 2	1	1				UR GRAY UR GRAY
	6KN–42712–00–CE	COWLING, BOTTOM 2 CUVETTE 2	1	1				UR WHITE UR WHITE
2	6GR–42744–00	STAY SUPPORT	1	1				
3	95D95–06012	BOLT, FLANGE DEEP RECESS BOULON FIXATION	2	2				
4	6GR–42622–01	SIDE, MOLE COWLING 1 COTE, MOULURE CARENAGE 1	1	1				
5	6KN–42713–00–8D	COWLING, BOTTOM 3 CUVETTE 3	1	1				UR GRAY UR GRAY
	6KN–42713–00–CE	COWLING, BOTTOM 3 CUVETTE 3	1	1				UR WHITE UR WHITE
6	6GR–42744–00	STAY SUPPORT	1	1				
7	95D95–06012	BOLT, FLANGE DEEP RECESS BOULON FIXATION	2	2				
8	6GR–42623–01	SIDE, MOLE COWLING 2 COTE, MOULURE CARENAGE 2	1	1				
9	90167–05017	SCREW, TAPPING VIS, TETE FRAISEE	4	4				
10	6GR–42615–00	SEAL JOINT	1	1				
11	6KN–42769–00	SEAL, RUBBER BOURRELET, CAOUTCHOUC	1	1				
12	6KN–44522–00	SEAL JOINT	1	1				
13	90480–16015	GROMMET PASSE-FIL	14	14				
14	6GR–42758–00	COLLAR ENTRETOISE	12	12				
15	90111–06175	BOLT, HEXAGON SOCKET BUTTON BOULON	12	12				
16	90111–06176	BOLT, HEXAGON SOCKET BUTTON BOULON	2	2				
17	90480–13034	GROMMET PASSE-FIL	4	4				
18	69J–42774–10	STAY, APRON 1 COUSSINET	2	2				
19	6GR–42768–01	DAMPER AMORTISSEUR	2	2				
20	6KN–42625–00–8D	PANEL, REAR PANNEAU	1	1				UR GRAY UR GRAY
	6KN–42625–00–CE	PANEL, REAR PANNEAU	1	1				UR WHITE UR WHITE
21	6GR–42748–01	GROMMET PASSE-FIL	1	1				
22	90480–16015	GROMMET PASSE-FIL	4	4				
23	6GR–42758–00	COLLAR ENTRETOISE	4	4				
24	90111–06175	BOLT, HEXAGON SOCKET BUTTON BOULON	4	4				

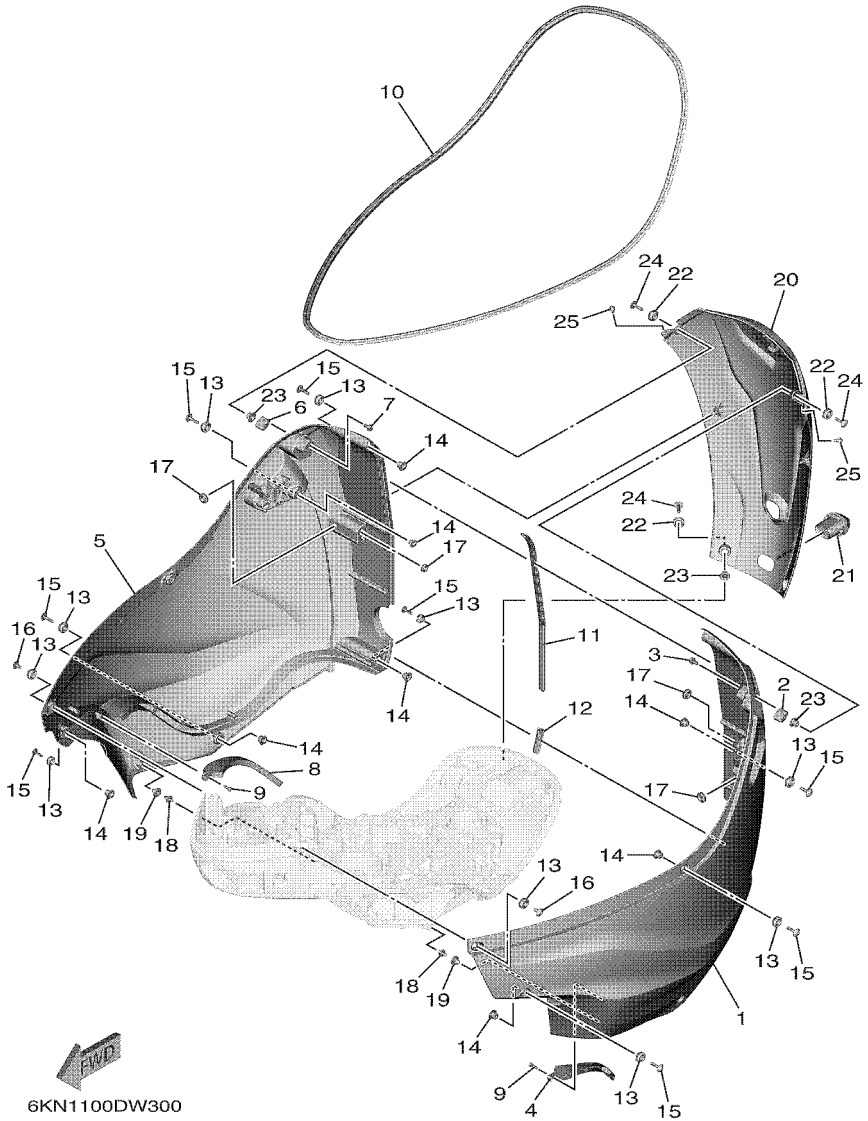

FIG. 30 BOTTOM COWLING 2 — CAPOT INFERIEUR 2

REF. NO.	PART NO. N° PIECES	DESCRIPTION DESCRIPTION	6KN3	6LB3				REMARKS REMARQUES
25	90338–07012	PLUG PLOT	2	2				

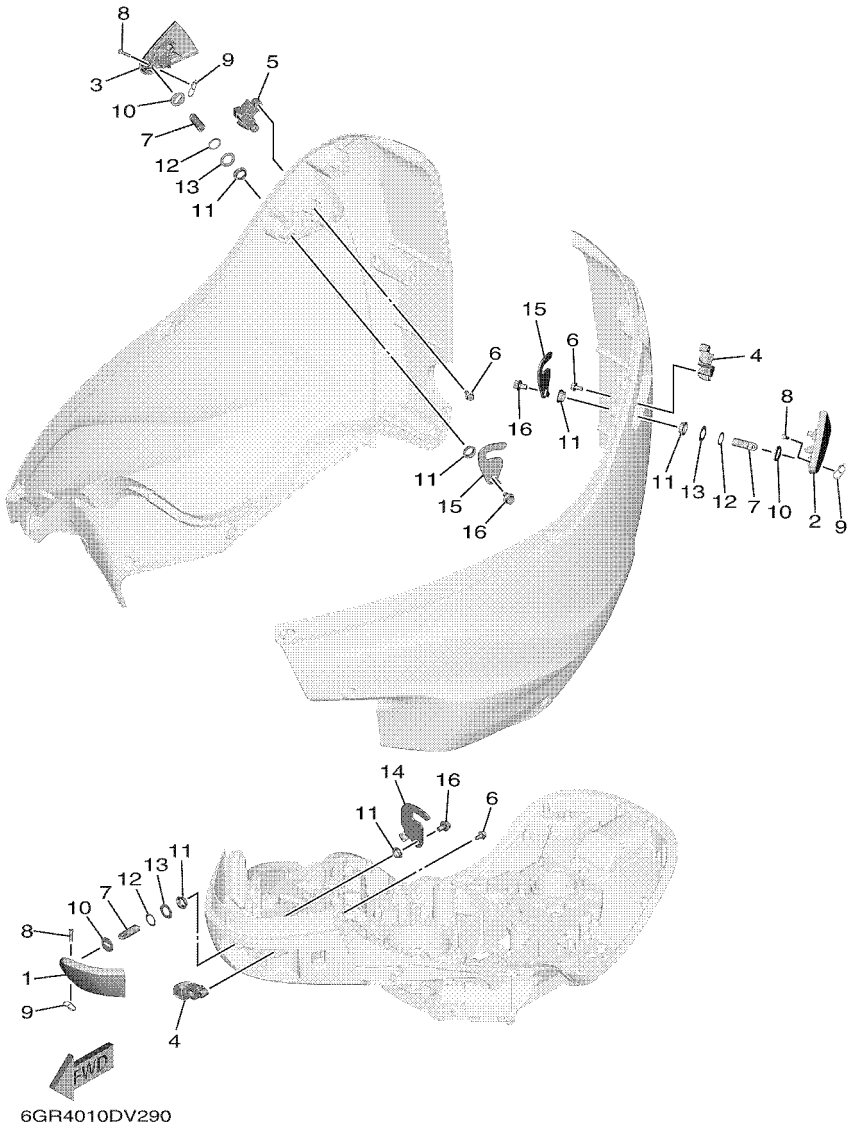

FIG. 31 BOTTOM COWLING 3 — CAPOT INFERIEUR 3

REF. NO.	PART NO. N° PIECES	DESCRIPTION DESCRIPTION	6KN3	6LB3				REMARKS REMARQUES
1	6GR–42815–00–8D	LEVER, CLAMP 1 LEVIER, PRESSE 1	1	1				UR GRAY UR GRAY
	6GR–42815–00–CE	LEVER, CLAMP 1 LEVIER, PRESSE 1	1	1				UR WHITE UR WHITE
2	6GR–42816–01–8D	LEVER, CLAMP 2 LEVIER, PRESSE 2	1	1				UR GRAY UR GRAY
	6GR–42816–01–CE	LEVER, CLAMP 2 LEVIER, PRESSE 2	1	1				UR WHITE UR WHITE
3	6GR–42817–01–8D	LEVER, CLAMP 3 LEVIER, PRESSE 3	1	1				UR GRAY UR GRAY
	6GR–42817–01–CE	LEVER, CLAMP 3 LEVIER, PRESSE 3	1	1				UR WHITE UR WHITE
4	6GR–42828–00	PLATE, CLAMP PLAQUE, PRESSE	2	2				
5	6GR–42829–00	PLATE, CLAMP 2 PLAQUE, PRESSE 2	1	1				
6	95D95–06012	BOLT, FLANGE DEEP RECESS BOULON FIXATION	6	6				
7	6GR–42835–00	PIN, SET 1 GOUPILLE, ELASTIQUE 1	3	3				
8	90240–05002	PIN, CLEVIS BOULON, A GOUPILLE	3	3				
9	68T–42835–00	PIN, SET 1 GOUPILLE, ELASTIQUE 1	3	3				
10	6GR–42833–00	WASHER, PLAIN RONDELLE, PLATE	3	3				
11	90386–15M73	BUSH DOUILLE	6	6				
12	90206–15M18	WASHER, WAVE RONDELLE, ONDULEE	3	3				
13	90201–156J2	WASHER, PLATE RONDELLE, PLATE	3	3				
14	6GR–42818–00	LEVER, CLAMP 4 LEVIER, PRESSE 4	1	1				
15	6GR–42819–00	LEVER, CLAMP 5 LEVIER, PRESSE 5	2	2				
16	95D95–08012	BOLT, FLANGE DEEP RECESS BOULON FIXATION	3	3				

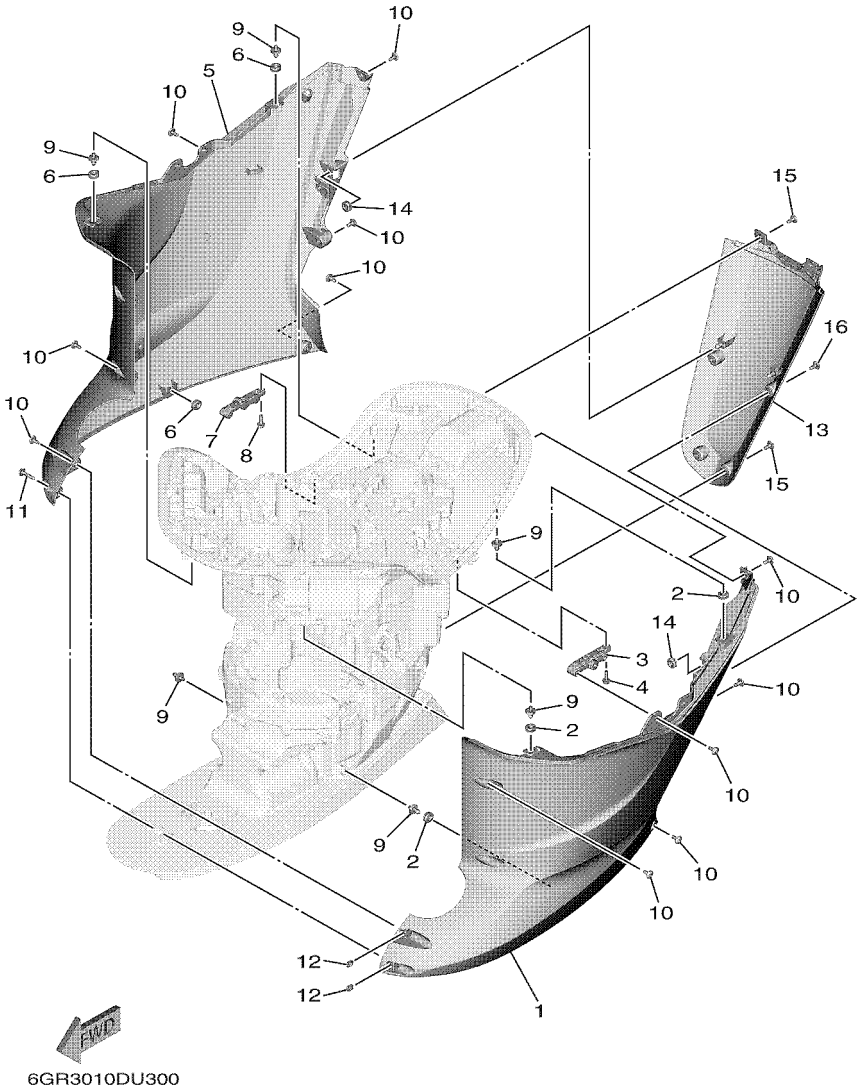

FIG. 32 BOTTOM COWLING 4 — CAPOT INFERIEUR 4

REF. NO.	PART NO. N° PIECES	DESCRIPTION DESCRIPTION	6KN3	6LB3				REMARKS REMARQUES
1	6GR–42740–00–8D	APRON COMPLETE 1 CAPOT LATERAL COMPLETE 1	1	1				UR GRAY UR GRAY
	6GR–42740–00–CE	APRON COMPLETE 1 CAPOT LATERAL COMPLETE 1	1	1				UR WHITE UR WHITE
2	90480–14M17	GROMMET PASSE-FIL	3	3				
3	6GR–42774–00–CA	STAY, APRON 1 COUSSINET	1	1				
4	95D95–06020	BOLT, FLANGE DEEP RECESS BOULON FIXATION	2	2				
5	6GR–42770–00–8D	APRON COMPLETE 2 CAPOT LATERAL COMPLETE 2	1	1				UR GRAY UR GRAY
	6GR–42770–00–CE	APRON COMPLETE 2 CAPOT LATERAL COMPLETE 2	1	1				UR WHITE UR WHITE
6	90480–14M17	GROMMET PASSE-FIL	3	3				
7	6GR–42775–00–CA	STAY, APRON 2 COUSSINET	1	1				
8	95D95–06020	BOLT, FLANGE DEEP RECESS BOULON FIXATION	2	2				
9	69J–42774–10	STAY, APRON 1 COUSSINET	6	6				
10	90111–06144	BOLT, HEXAGON SOCKET BUTTON BOULON	15	15				
11	90111–06142	BOLT, HEXAGON SOCKET BUTTON BOULON	1	1				
12	90173–06001	NUT, SQUARE ECROU, CARRE	2	2				
13	6GR–45141–00–8D	COVER, UPPER CASING CAPUCHON, FOURREAU	1	1				UR GRAY UR GRAY
	6GR–45141–00–CE	COVER, UPPER CASING CAPUCHON, FOURREAU	1	1				UR WHITE UR WHITE
14	90480–14M17	GROMMET PASSE-FIL	2	2				
15	90111–06144	BOLT, HEXAGON SOCKET BUTTON BOULON	4	4				
16	90111–06142	BOLT, HEXAGON SOCKET BUTTON BOULON	2	2				

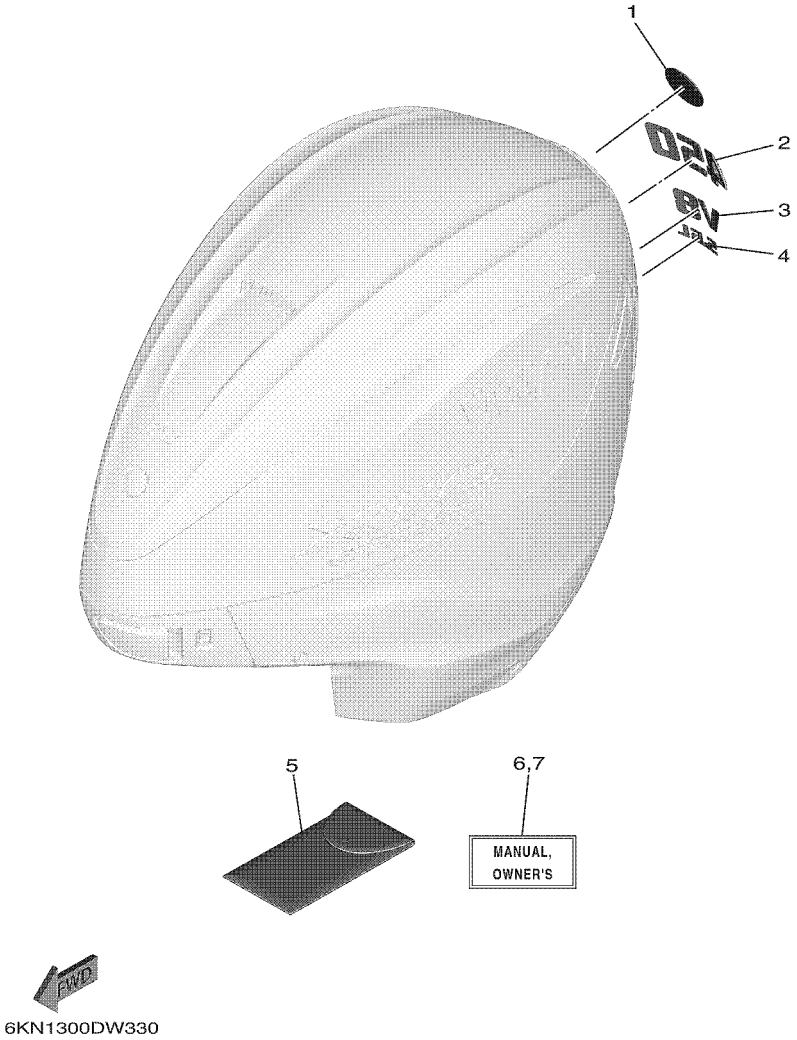

FIG. 33 GRAPHIC & TOOL — GRAPHIQUE & OUTIL

REF. NO.	PART NO. N° PIECES	DESCRIPTION DESCRIPTION	6KN3	6LB3				REMARKS REMARQUES
1	6KN–42697–00	TUNING FORK MARK MARQUE, YAMAHA	1	1				
2	6KN–4267A–00	GRAPHIC, REAR 2 ADHESIF, ARRIERE 2	1					
	6LB–4267A–00	GRAPHIC, REAR 2 ADHESIF, ARRIERE 2		1				
3	6GR–42678–00	GRAPHIC, REAR ADHESIF, ARRIERE	1	1				
4	6GR–42682–00	MARK, COWLING ADHESIF, CAPOT	1	1				
5	6GR–28100–11	TOOL KIT TROUSSE A OUTILS	1	1				
6	6KN–28199–72–E0	MANUAL,OWNER'S MANUEL D'UTILISATION	1	1				UR (E) UR (E)
	6KN–28199–72–F0	MANUAL,OWNER'S MANUEL D'UTILISATION	1	1				UR (F) UR (F)
	6KN–28199–72–S0	MANUAL,OWNER'S MANUEL D'UTILISATION	1	1				UR (ES) UR (ES)
	6KN–28199–72–G0	MANUAL,OWNER'S MANUEL D'UTILISATION	1	1				UR (D) UR (D)
	6KN–28199–72–D0	MANUAL,OWNER'S MANUEL D'UTILISATION	1	1				UR (NL) UR (NL)
	6KN–28199–72–H0	MANUAL,OWNER'S MANUEL D'UTILISATION	1	1				UR (I) UR (I)
7	6KN–28199–82–K0	MANUAL,OWNER'S MANUEL D'UTILISATION	1	1				UR (DK) UR (DK)
	6KN–28199–82–R0	MANUAL,OWNER'S MANUEL D'UTILISATION	1	1				UR (GR) UR (GR)
	6KN–28199–82–P0	MANUAL,OWNER'S MANUEL D'UTILISATION	1	1				UR (P) UR (P)
	6KN–28199–82–N0	MANUAL,OWNER'S MANUEL D'UTILISATION	1	1				UR (N) UR (N)
	6KN–28199–82–M0	MANUAL,OWNER'S MANUEL D'UTILISATION	1	1				UR (S) UR (S)
	6KN–28199–82–L0	MANUAL,OWNER'S MANUEL D'UTILISATION	1	1				UR (SF) UR (SF)

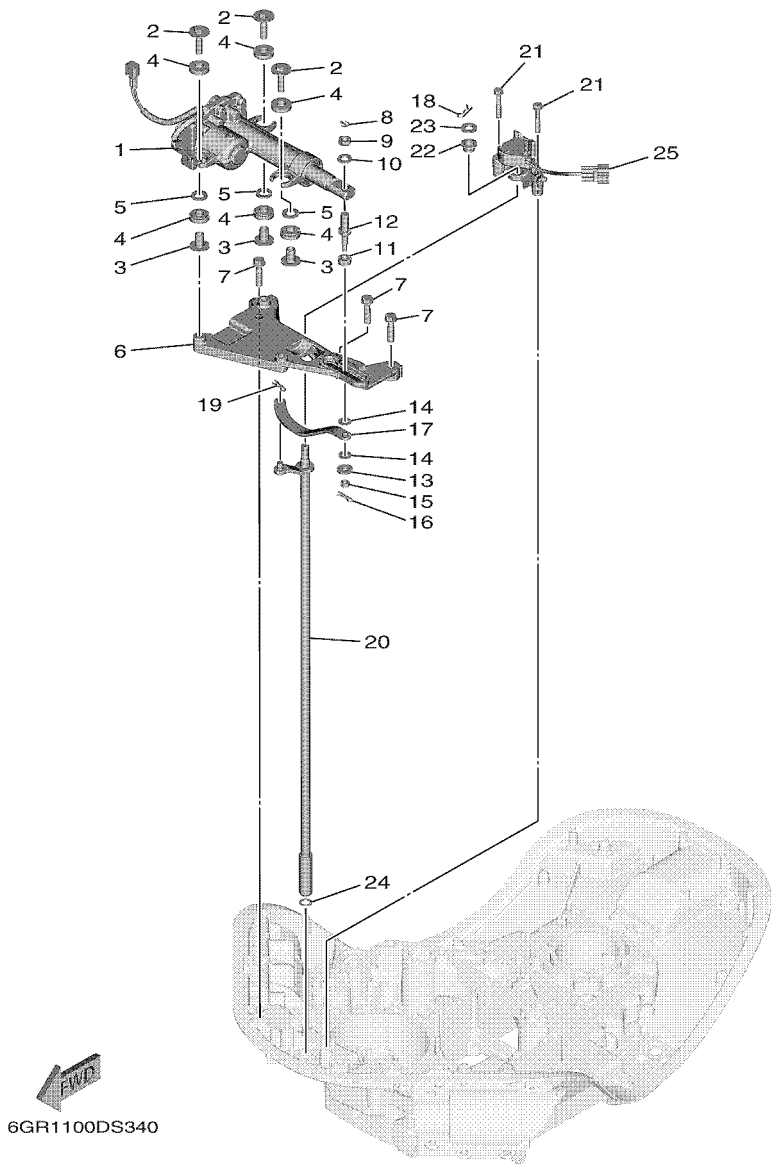

FIG. 34 CONTROL — COMMANDE

REF. NO.	PART NO. N° PIECES	DESCRIPTION DESCRIPTION	6KN3	6LB3				REMARKS REMARQUES
1	6GR–4820A–01	ACTUATOR UNIT ACTUATOR UNIT	1	1				
2	90119–08175	BOLT, WITH WASHER BOULON, AVEC RONDELLE	3	3				
3	90387–08104	COLLAR COLLERETTE	3	3				
4	6CE–85564–00	GROMMET RONDELLE CAOUTCHOUC	6	6				
5	90201–12064	WASHER, PLATE RONDELLE, PLATE	3	3				
6	6GR–44117–00	BRACKET SUPPORT	1	1				
7	97E75–08535	BOLT, HEXAGON W/W DEEP RECESS VIS HEXAGONAL AVC RONDELLE	3	3				
8	91490–20015	PIN. COTTER GOUPILLE	1	1				
9	95380–10700	NUT ECROU	1	1				
10	90201–10048	WASHER, PLATE RONDELLE, PLATE	1	1				
11	6CE–44122–00	BUSHING, SHIFT ROD LEVER DOUILLE, LEVIER D'EMBRAYAGE	1	1				
12	6GR–42195–00	PIN, JOINT 1 GOUPILLE	1	1				
13	90201–06068	WASHER, PLATE RONDELLE, PLATE	1	1				
14	90202–08M41	WASHER, PLATE RONDELLE, PLATE	2	2				
15	90185–06M07	NUT, SELF-LOCKING ECROU,AUTO-BLOQUANT	1	1				
16	90468–18008	CLIP JONC	1	1				
17	6GR–44121–00	LEVER, SHIFT ROD LEVIER, TIGE D'INVERSION	1	1				
18	90468–180A0	CLIP JONC	1	1				
19	90468–18008	CLIP JONC	1	1				
20	6GR–44120–01	HANDLE GEAR SHIFT ASSY LEVIER D'EMBRAYAGE	1	1				
21	97E95–06540	BOLT, HEXAGON W/W DEEP RECESS VIS HEXAGONAL AVC RONDELLE	2	2				
22	90386–12M61	BUSH DOUILLE	1	1				
23	90201–10081	WASHER, PLATE RONDELLE, PLATE	1	1				
24	93210–11073	O-RING JOINT TORIQUE	1	1				
25	6GR–68303–00	SENSOR ASSY SONDE (ENS.)	1	1				

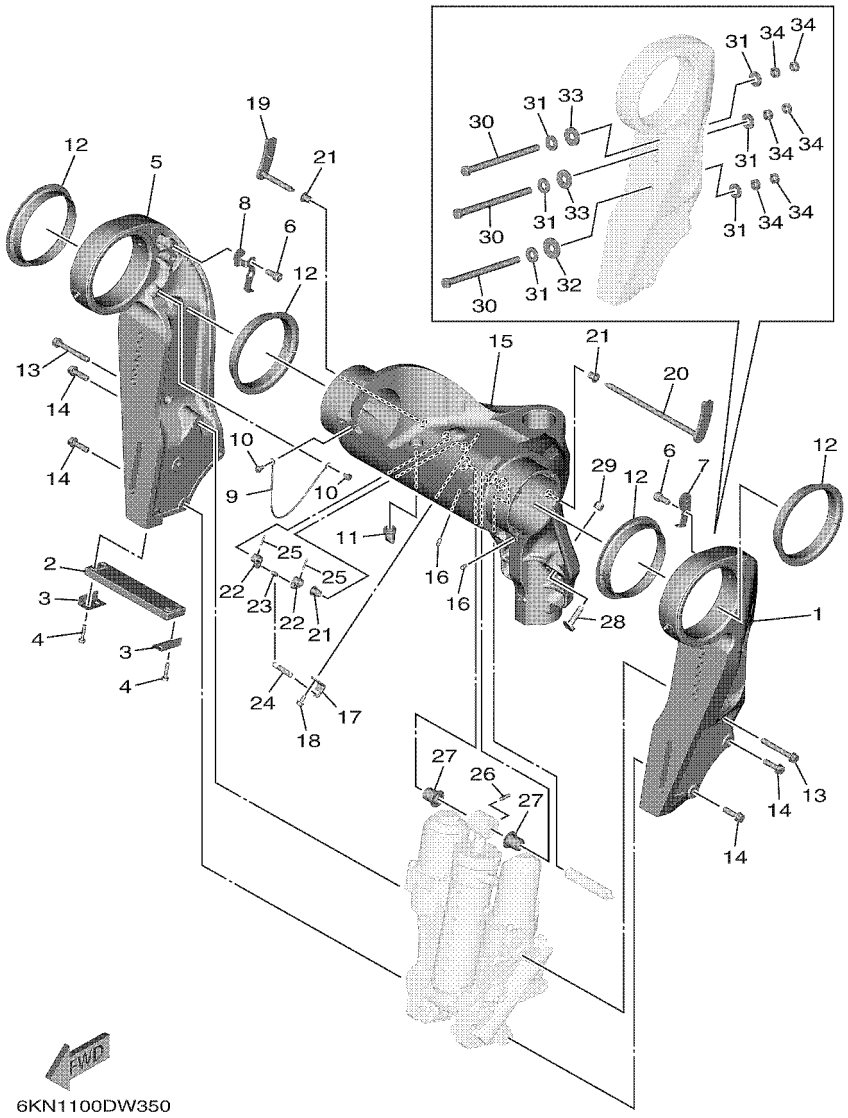

FIG. 35 BRACKET 1 SUPPORT 1

REF. NO.	PART NO. N° PIECES	DESCRIPTION DESCRIPTION	6KN3	6LB3				REMARKS REMARQUES
1	6GR–4311A–00–8D	BRACKET, CLAMP 1, W/NIPPLE PRESSE 1	1	1				UR GRAY UR GRAY
	6GR–4311A–00–CE	BRACKET, CLAMP 1, W/NIPPLE PRESSE 1	1	1				UR WHITE UR WHITE
2	6AW–45251–00	ANODE ANODE	1	1				
3	6G5–44526–00	PLATE PLAQUE	2	2				
4	97E95–06530	BOLT, HEXAGON W/W DEEP RECESS VIS HEXAGONAL AVC RONDELLE	4	4				
5	6GR–4311B–00–8D	BRACKET, CLAMP 2, W/NIPPLE PRESSE 2	1	1				UR GRAY UR GRAY
	6GR–4311B–00–CE	BRACKET, CLAMP 2, W/NIPPLE PRESSE 2	1	1				UR WHITE UR WHITE
6	91380–10020	BOLT BOULON	4	4				
7	6GR–4381E–00	BRACKET, 1 SUPPORT, 1	1	1				
8	6GR–4381F–00	BRACKET, 2 SUPPORT, 2	1	1				
9	6GR–82147–00	WIRE, LEAD 5 FIL 5	1	1				
10	97E95–06510	BOLT, HEXAGON W/W DEEP RECESS VIS HEXAGONAL AVC RONDELLE	2	2				
11	61A–42717–00	RUBBER, SEAL 2 JOINT EN CAOUTCHOUC 2	1	1				
12	6GR–43333–00	BUSH. , SWIVEL BRACKET BUISSON. , SUPPORT PIVOTANT	4	4				
13	90119–10064	BOLT, WITH WASHER BOULON, AVEC RONDELLE	2	2				
14	90119–10040	BOLT, WITH WASHER BOULON, AVEC RONDELLE	6	6				
15	6GR–43311–02–8D	BRACKET, SWIVEL 1 SUPPORT, PIVOT 1	1	1				UR GRAY UR GRAY
	6GR–43311–02–CE	BRACKET, SWIVEL 1 SUPPORT, PIVOT 1	1	1				UR WHITE UR WHITE
16	93700–06002	NIPPLE, GREASE PION	3	3				
17	6GR–43144–00	HOOK, SPRING CROCHET	1	1				
18	95D95–06012	BOLT, FLANGE DEEP RECESS BOULON FIXATION	1	1				
19	6GR–43181–00	LEVER, TILT STOP 1 LEVIER VERROUILLAGE RELEVAGE 1	1	1				
20	6GR–43185–00	LEVER, TILT STOP 2 LEVIER VERROUILLAGE RELEVAGE 2	1	1				
21	90386–10M16	BUSH DOUILLE	3	3				
22	6G5–43148–00	COLLAR, DISTANCE ENTRETOISE	2	2				
23	90249–06M19	PIN GOUPILLE	1	1				
24	90506–16010	SPRING, TENSION RESSORT, TENSION	1	1				

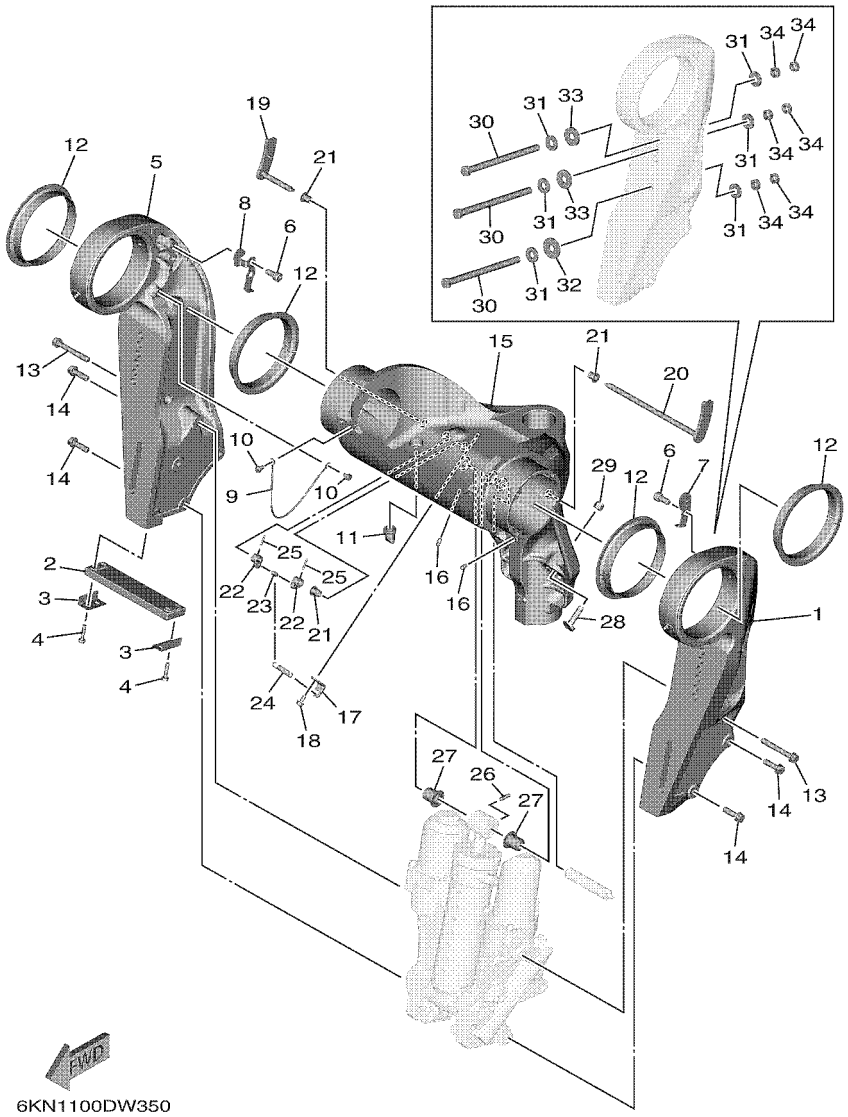

FIG. 35 BRACKET 1 SUPPORT 1

REF. NO.	PART NO. N° PIECES	DESCRIPTION DESCRIPTION	6KN3	6LB3				REMARKS REMARQUES
25	91690–30020	PIN, SPRING AGRAFFE	2	2				
26	91690–60022	PIN, SPRING AGRAFFE	1	1				
27	90386–20002	BUSH DOUILLE	2	2				
28	6GR–43376–01	BOLT, THRUST RECEIVER BOULON	2	2				
29	95780–10300	NUT, FLANGE ECROU	2	2				
30	90101–12073	BOLT (180MM) BOULON (180MM)	6	6				
	90101–12072	BOLT (110MM) BOULON (110MM)	2	2				AP AP
	90101–12067	BOLT (150MM) BOULON (150MM)	2	2				AP AP
	90101–12068	BOLT (170MM) BOULON (170MM)	2	2				AP AP
	90101–12073	BOLT (180MM) BOULON (180MM)	2	2				AP AP
	90101–12074	BOLT (200MM) BOULON (200MM)	2	2				AP AP
	90101–12069	BOLT (210MM) BOULON (210MM)	2	2				AP AP
	90101–12070	BOLT (230MM) BOULON (230MM)	2	2				AP AP
31	90201–12060	WASHER, PLATE RONDELLE, PLATE	12	12				
32	90201–12426	WASHER, PLATE RONDELLE, PLATE	2	2				
33	90201–13M19	WASHER, PLATE RONDELLE, PLATE	4	4				
34	95380–12600	NUT ECROU	12	12				

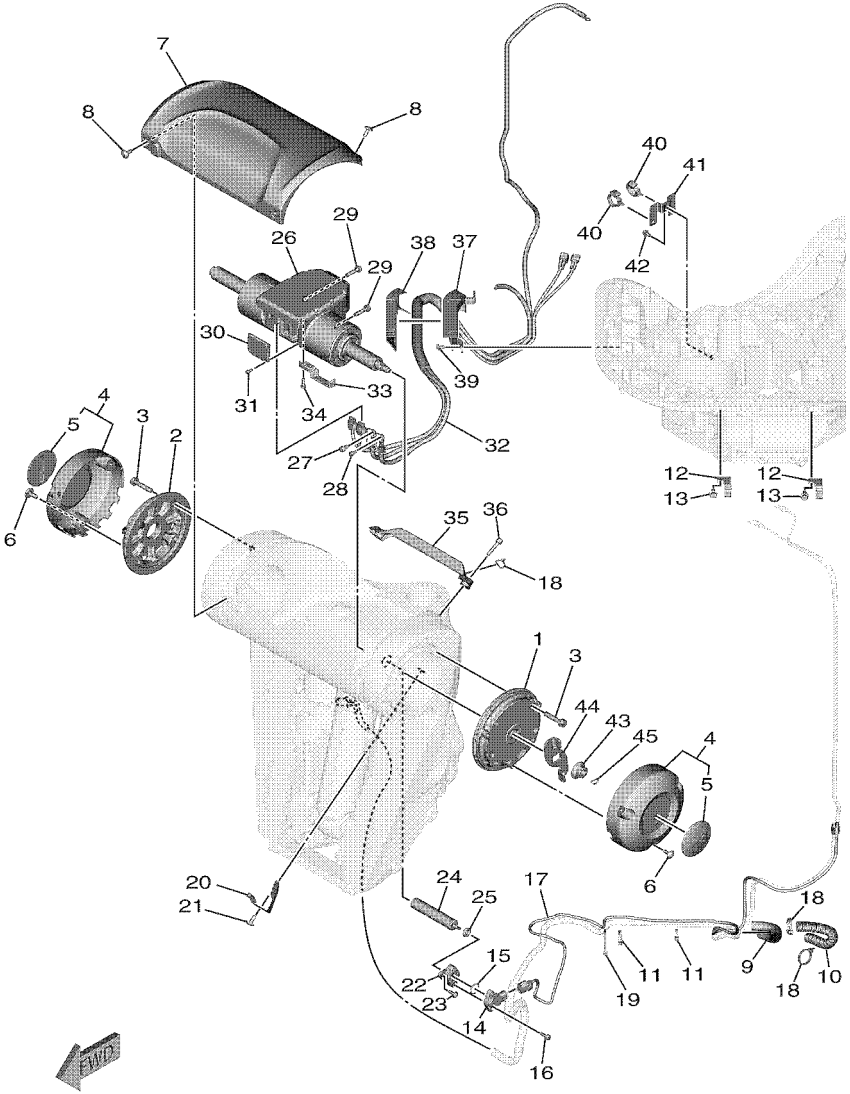

6KN1100DW360

FIG. 36 BRACKET 2 — SUPPORT 2

REF. NO.	PART NO. N° PIECES	DESCRIPTION DESCRIPTION	6KN3	6LB3				REMARKS REMARQUES
1	6GR–43341–00	COVER, SWIVEL SODE 1 COUVERCLE, PIVOTANT COTE 1	1	1				
2	6GR–43342–00	COVER, SWIVEL SODE 2 COUVERCLE, PIVOTANT COTE 2	1	1				
3	90119–08176	BOLT, WITH WASHER BOULON, AVEC RONDELLE	8	8				
4	6GR–W436G–00–8D	SBW SIDE COVER ASSY SBW COUVERCLE LATERAL ASSEMBLE	2	2				UR GRAY UR GRAY
	6GR–W436G–00–CE	SBW SIDE COVER ASSY SBW COUVERCLE LATERAL ASSEMBLE	2	2				UR WHITE UR WHITE
5	6DA–42697–00	.TUNING FORK MARK .MARQUE, YAMAHA	1	1				
6	90111–06144	BOLT, HEXAGON SOCKET BUTTON BOULON	6	6				
7	6GR–43318–00–8D	COVER CAPUCHON	1	1				UR GRAY UR GRAY
	6GR–43318–00–CE	COVER CAPUCHON	1	1				UR WHITE UR WHITE
8	90111–06144	BOLT, HEXAGON SOCKET BUTTON BOULON	4	4				
9	6GR–24864–00	TUBE DURITE	1	1				
10	6KN–24864–00	TUBE DURITE	1	1				
11	90465–11M10	CLAMP BRIDE	2	2				
12	90462–10033	CLAMP BRIDE	2	2				
13	95D95–06012	BOLT, FLANGE DEEP RECESS BOULON FIXATION	2	2				
14	6GR–85887–00	SENSOR ANGLE CAPTEUR DE COUPLE	1	1				
15	93210–17MF9	O-RING JOINT TORIQUE	1	1				
16	97595–05516	BOLT, WITH WASHER VIS HEXAGONAL AVC RONDELLE	2	2				
17	6GR–82553–00	EXTENSION, WIRE LEAD EXTENSION, FAISCEAU	1	1				
18	90464–36005	CLAMP BRIDE	3	3				
19	90464–55002	CLAMP BRIDE	1	1				
20	6GR–4381J–00	PLATE PLAQUE	1	1				
21	90111–06144	BOLT, HEXAGON SOCKET BUTTON BOULON	1	1				
22	6GR–4382A–00	ADAPTOR 1 ADAPTEUR 1	1	1				
23	90149–05044	SCREW VIS	2	2				
24	6GR–43126–00	PIN, UPPER SHOCK MOUNT AXE, SUPERIEUR AMORTISSEUR	1	1				
25	93210–06ME6	O-RING JOINT TORIQUE	1	1				

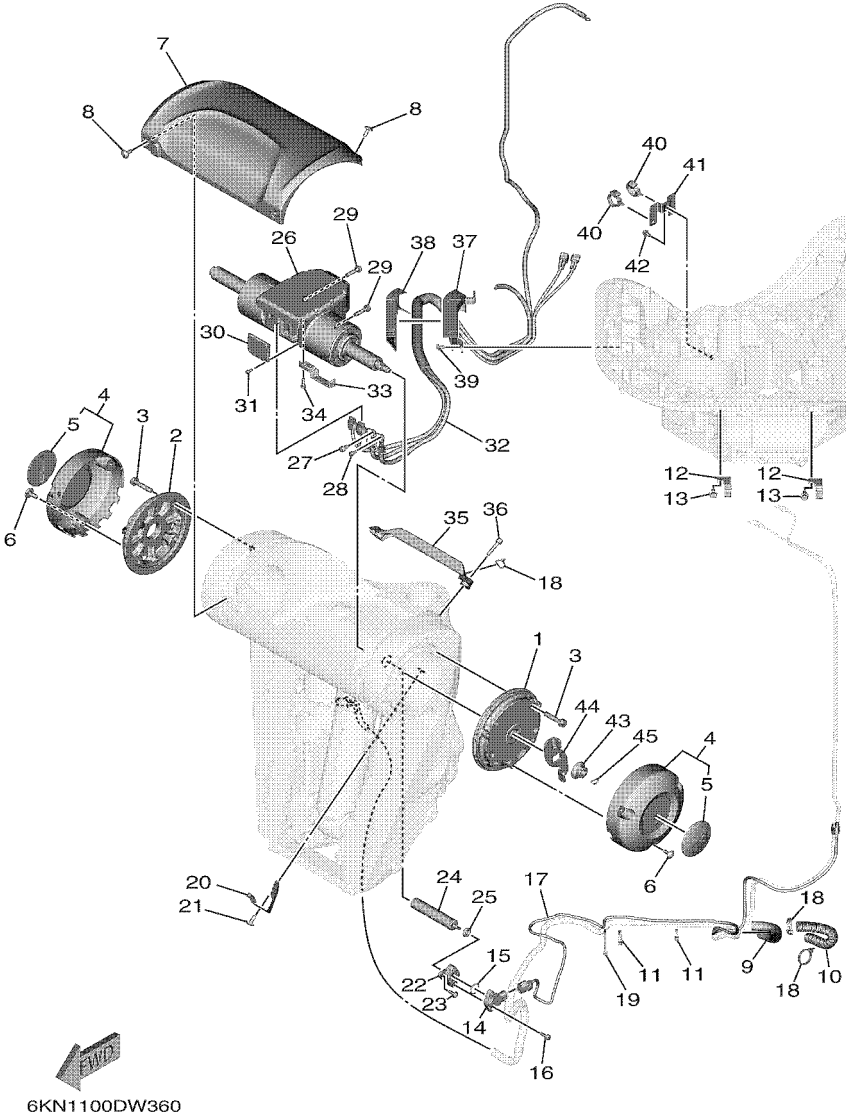

FIG. 36 BRACKET 2 — SUPPORT 2

REF. NO.	PART NO. N° PIECES	DESCRIPTION DESCRIPTION	6KN3	6LB3				REMARKS REMARQUES
26	6GR–42401–23	POWER STEERING CYLINDER ASSY CYLINDRE, DIRECTION ASSISTEE	1	1				
27	6GR–44331–00	BOLT, 1 BOULON, 1	1	1				
28	6GR–44332–00	BOLT, 2 BOULON, 2	1	1				
29	97580–08535	BOLT, WITH WASHER VIS HEXAGONAL AVC RONDELLE	4	4				
30	6GR–42134–00	COVER CAPOT	1	1				
31	91380–04010	BOLT BOULON	4	4				
32	6GR–438A0–02	STEERING, WIRE HARNESS ASSY DIRECTION, FAISCEAU DE FILS CO	1	1				
33	6GR–48538–00	CLAMP, CABLE 1 COLLIER	1	1				
34	97D95–06018	BOLT, HEXAGON DEEP RECESS VIS HEXAGONAL	2	2				
35	6GR–47716–00	COVER COUVERCLE	1	1				
36	90110–06191	BOLT, HEXAGON SOCKET HEAD BOULON, TETE HEXAGONALE CREUSE	2	2				
37	6GR–43121–00	PROTECTOR PROTECTEUR	1	1				
38	6GR–47445–00	PROTECTOR PROTECTEUR	1	1				
39	95D95–06012	BOLT, FLANGE DEEP RECESS BOULON FIXATION	2	2				
40	90464–12183	CLAMP BRIDE	2	2				
41	6GR–48539–00	CLAMP, CABLE 2 COLLIER, CABLE 2	1	1				
42	95D95–06012	BOLT, FLANGE DEEP RECESS BOULON FIXATION	1	1				
43	90179–14009	NUT ECROU	1	1				
44	6GR–43378–10	WASHER RONDELLE	1	1				
45	91490–20025	PIN. COTTER GOUPILLE	1	1				

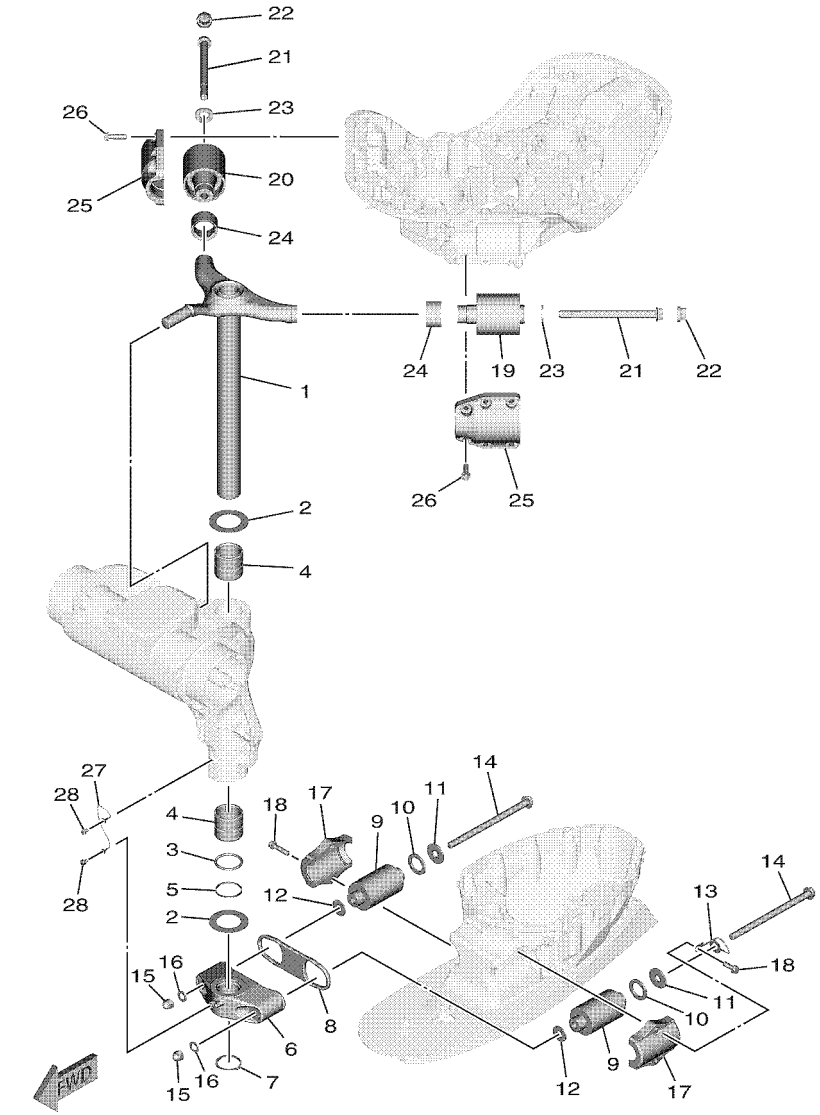

FIG. 37 BRACKET 3 — SUPPORT 3

REF. NO.	PART NO. N° PIECES	DESCRIPTION DESCRIPTION	6KN3	6LB3				REMARKS REMARQUES
1	6GR–42510–01–8D	STEERING BRACKET ASSY DIRECTION SUPPORT (ENS.)	1	1				
2	90201–51014	WASHER, PLATE RONDELLE, PLATE	2	2				
3	93210–49003	O-RING JOINT TORIQUE	1	1				
4	90386–49001	BUSH DOUILLE	2	2				
5	90202–51001	WASHER, PLATE RONDELLE, PLATE	1	1				
6	6GR–44551–00–CA	HOUSING, LOWER MOUNT RUBBER 1 BOITIER, SILENT-BLOC INFERIEUR	1	1				
7	93410–46099	CIRCLIP CIRCLIP	1	1				
8	6GR–44575–01	DAMPER, LOWER MOUNT RUBBER SILENT-BLOC, INFERIEUR	1	1				
9	6AW–44555–00	MOUNT DAMPER, LOWER SIDE SILENT-BLOC, INFERIEUR LATERAL	2	2				
10	90202–32M19	WASHER, PLATE RONDELLE, PLATE	2	2				
11	90201–16M55	WASHER, PLATE RONDELLE, PLATE	2	2				
12	90201–15M58	WASHER, PLATE RONDELLE, PLATE	2	2				
13	6GR–82149–00	WIRE, LEAD 3 FIL 3	1	1				
14	90105–14012	BOLT, FLANGE BOULON, A COLLERETTE	2	2				
15	95380–14800	NUT ECROU	2	2				
16	92995–14600	WASHER RONDELLE	2	2				
17	6AW–44552–00–CA	HOUSING, LOWER MOUNT RUBBER 2 BOITIER, SILENT-BLOC INFERIEUR	2	2				
18	90119–10024	BOLT, WITH WASHER BOULON, AVEC RONDELLE	4	4				
19	6GR–44514–00	MOUNT DAMPER, UPPER SIDE SILENT-BLOC, SUPERIEUR LATERAL	1	1				
20	6GR–44515–00	MOUNT RUBBER, UPPER SIDE SILENT-BLOC, SUPERIEUR LATERAL	1	1				
21	90105–16004	BOLT, FLANGE BOULON, A COLLERETTE	2	2				
22	6GR–44194–01	CAP CAPUCHON	2	2				
23	90201–18030	WASHER, PLATE RONDELLE, PLATE	2	2				
24	6GR–44533–00	DAMPER, UPPER MOUNT RUBBER COUVERCLE, SUSPENSION INFERIEU	2	2				
25	6GR–44511–00–CA	COVER, UPPER MOUNT COUVERCLE, SUSPENSION SUPERIEU	2	2				
26	90119–10058	BOLT, WITH WASHER BOULON, AVEC RONDELLE	12	12				
27	6T4–82117–00	WIRE, LEAD FIL	1	1				

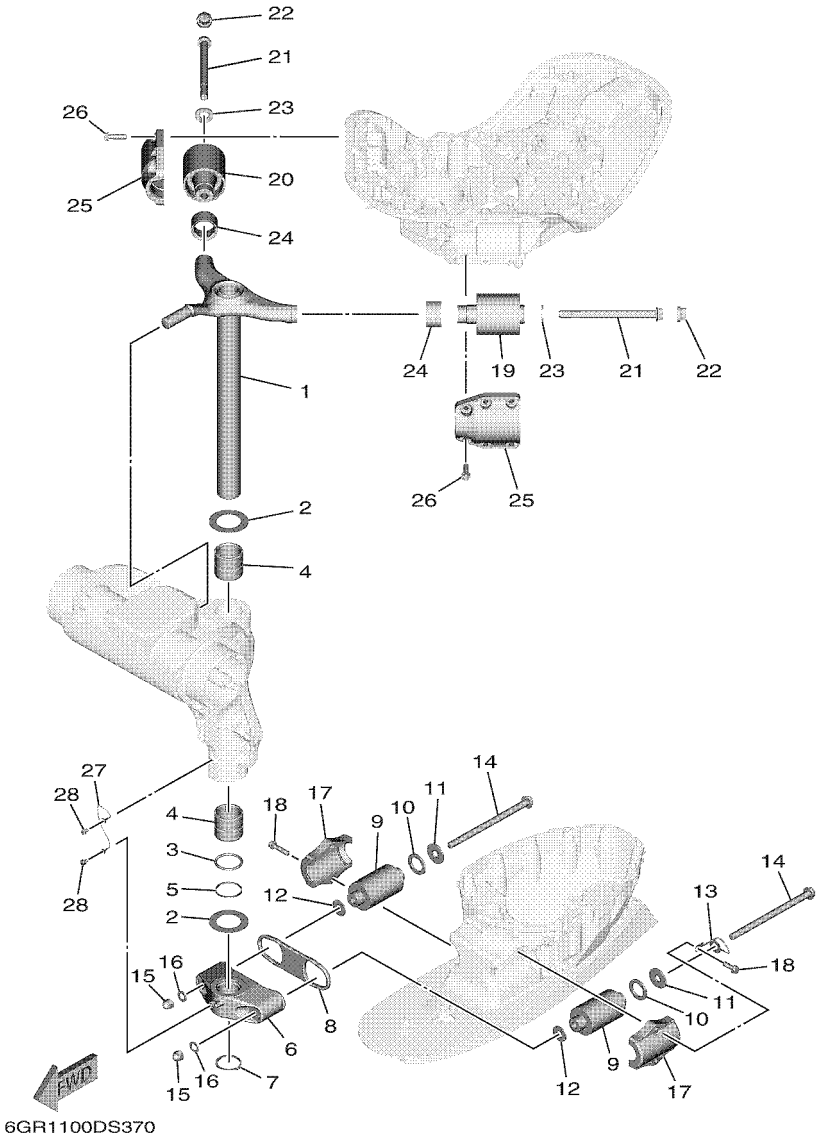

FIG. 37 BRACKET 3 — SUPPORT 3

REF. NO.	PART NO. N° PIECES	DESCRIPTION DESCRIPTION	6KN3	6LB3				REMARKS REMARQUES
28	97E95–06510	BOLT, HEXAGON W/W DEEP RECESS VIS HEXAGONAL AVC RONDELLE	2	2				

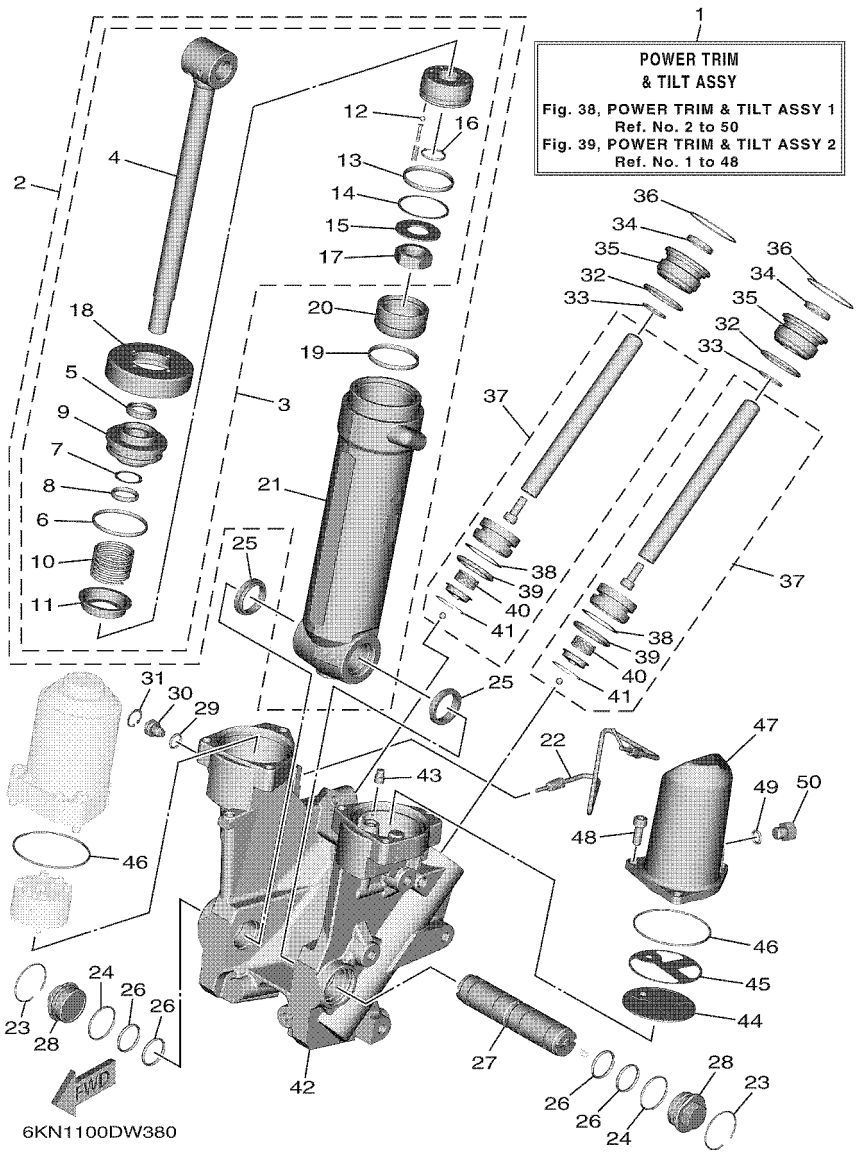

FIG. 38 POWER TRIM & TILT ASSY 1 — PUISSANCE PARER ET INCLINER 1

REF. NO.	PART NO. N° PIECES	DESCRIPTION DESCRIPTION	6KN3	6LB3				REMARKS REMARQUES
1	6KN–43800–00	POWER TRIM & TILT ASSY PUISSANCE PARER ET INCLINER (E	1	1				
2	6GR–43840–00	POWER TILT ASSY PUISSANCE INCLINER (ENS.)	1	1				
3	6GR–43810–00	.TILT PISTON SUB ASSY .INCLINER PISTON AUXILIAIRE(ENS	1	1				
4	6GR–43801–00	..ROD ..TIGE	1	1				
5	6GR–43812–00	..SEAL, DUST ..JOINT	1	1				
6	93210–49046	..O-RING ..JOINT TORIQUE	1	1				
7	6GR–43872–00	..RING, BACK UP ..RESSORT	1	1				
8	6GR–43863–00	..O-RING ..JOINT TORIQUE	1	1				
9	6GR–43811–00	..SCREW, CYLINDER END ..VIS, CYLINDRE RACCORD	1	1				
10	69J–4384H–00	..SPRING ..RESSORT	1	1				
11	6GR–4382E–00	..ADAPTOR 2 ..ADAPTEUR 2	1	1				
12	93505–32038	..BALL ..BILLE	4	4				
13	93210–44006	..O-RING ..JOINT TORIQUE	1	1				
14	6GR–43871–00	..RING, BACK UP ..SEGMENT	1	1				
15	90201–18029	..WASHER, PLATE ..RONDELLE, PLATE	1	1				
16	93210–18397	..O-RING ..JOINT TORIQUE	1	1				
17	6GR–43654–00	..NUT 1 ..ECROU 1	1	1				
18	6GR–43827–00	..RING SET ..BILLE	1	1				
19	93210–44006	.O-RING .JOINT TORIQUE	1	1				
20	6GR–43814–00	.PISTON, FREE .PISTON	1	1				
21	6GR–4380K–00	.CYLINDER, TILT SUB ASSY .CYLINDRE	1	1				
22	6GR–43835–00	PIPE TUYAU	1	1				
23	93450–42110	CIRCLIP CIRCLIP	2	2				
24	6GR–43862–00	O-RING JOINT TORIQUE	2	2				
25	6GR–4388F–00	SPACER ENTRETOISE	2	2				
26	6GR–43861–00	O-RING JOINT TORIQUE	4	4				
27	6GR–43818–00	PIN, LOWER SHOCK MOUNT AXE, INFERIEUR AMORTISSEUR	1	1				

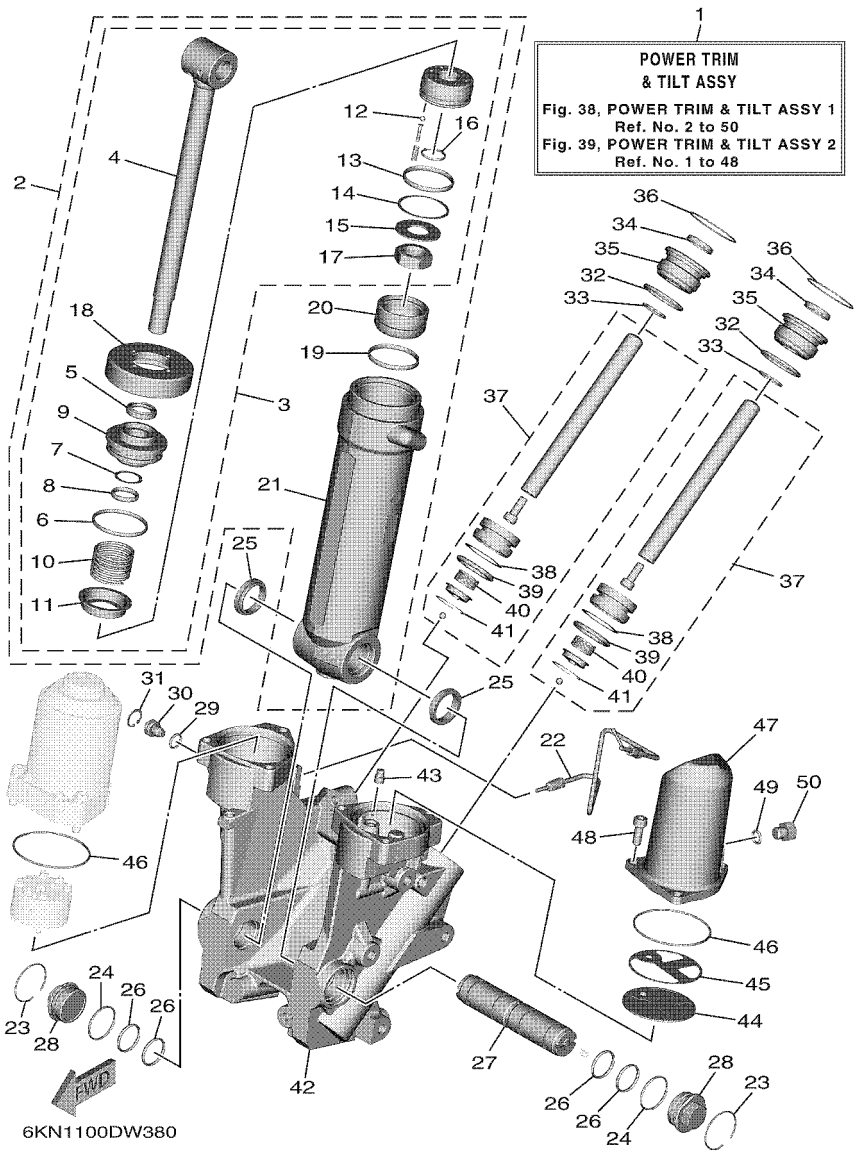

FIG. 38 POWER TRIM & TILT ASSY 1 — PUISSANCE PARER ET INCLINER 1

REF. NO.	PART NO. N° PIECES	DESCRIPTION DESCRIPTION	6KN3	6LB3				REMARKS REMARQUES
28	6GR–22472–00	CAP, CASE COUVERCLE DE BOITIER	2	2				
29	93210–12327	O-RING JOINT TORIQUE	1	1				
30	6GR–43845–00	SCREW, MANUAL RELEASE VIS	1	1				
31	61A–43876–01	RING, SNAP RESSORT	1	1				
32	61A–43861–00	O-RING JOINT TORIQUE	2	2				
33	6D8–43863–00	O-RING JOINT TORIQUE	2	2				
34	63P–43812–20	SEAL, DUST JOINT	2	2				
35	61A–43821–02	SCREW, TRIM CYLINDER END VIS	2	2				
36	6KN–25415–00	CIRCLIP CIRCLIP	2	2				
37	6GR–43820–00	TRIM PISTON SUB ASSY PARER PISTON AUXILIAIRE (ENS.)	2	2				
38	61A–43874–00	.RING, BACK UP .RESSORT	1	1				
39	61A–43864–00	.O-RING .JOINT TORIQUE	1	1				
40	61A–4384H–10	.SPRING .RESSORT	1	1				
41	61A–43875–10	.RING, SNAP .RESSORT	1	1				
42	6KN–4380L–00	HOUSING, TRIM & TILT SUB ASSY CARTER	1	1				
43	6GR–4388H–00	PLUG BOUCHON	1	1				
44	69J–43817–00	FILTER 2 FILTRE 2	1	1				
45	69J–4388F–00	SPACER ENTRETOISE	1	1				
46	93210–66001	O-RING JOINT TORIQUE	2	2				
47	6GR–43828–00	BODY, RESERVOIR CORPS	1	1				
48	69J–43888–00	BOLT, SOCKET BOULON	3	3				
49	93210–09165	O-RING JOINT TORIQUE	1	1				
50	6EK–43829–00	PLUG, RESERVOIR BOUCHON	1	1				

FIG. 39 POWER TRIM & TILT ASSY 2 — PUISSANCE PARER ET INCLINER 2

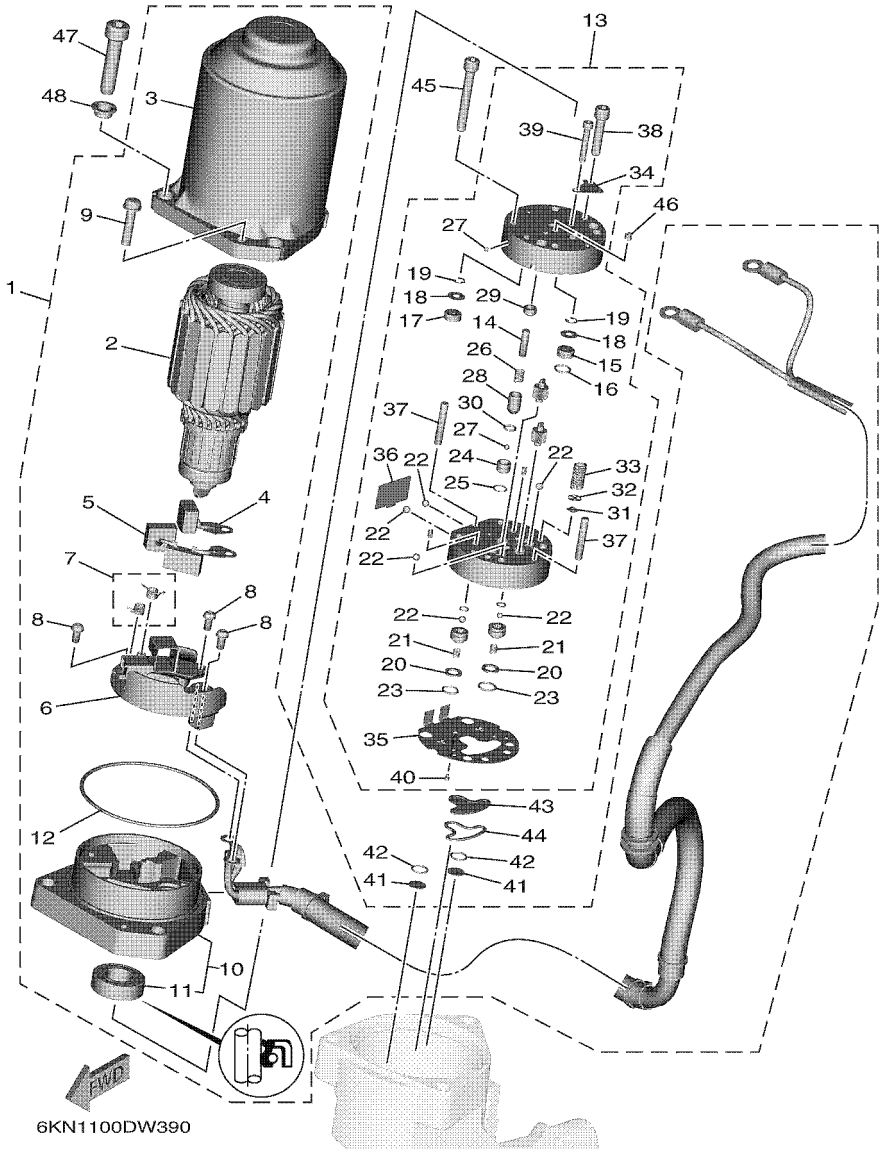

REF. NO.	PART NO. N° PIECES	DESCRIPTION DESCRIPTION	6KN3	6LB3				REMARKS REMARQUES
1	6KN–43880–00	MOTOR ASSY MOTEUR (ENS.)	1	1				
2	6GR–43805–00	.ARMATURE ASSY .INDUIT (ENS.)	1	1				
3	6GR–43804–00	.STATOR ASSY .STATOR (ENS.)	1	1				
4	6GR–43892–00	.BRUSH 2 .BALAI 2	1	1				
5	6GR–82181–00	.CIRCUIT BREAKER COMP. .RUPTEUR COMPLET	1	1				
6	6GR–4380F–00	.PLATE, BRUSH HOLDER .PLAQUE	1	1				
7	6GR–4386K–00	.SPRING, BRUSH .RESSORT, BALAI	1	1				
8	97602–04310	.SCREW, PAN HEAD WITH WASHER .VIS, AVEC RONDELLE	4	4				
9	67C–43879–10	.SCREW, WITH WASHER .VIS, AVEC RONDELLE	2	2				
10	6KN–43881–00	.FRAME, END .BATI	1	1				
11	6GR–43882–01	..OIL SEAL ..JOINT SPI	1	1				
12	6GR–43864–01	.O-RING .JOINT TORIQUE	1	1				
13	6GR–43830–00	GEAR PUMP ASSY POMPE A PIGNON (ENS.)	1	1				
14	93603–08072	.PIN, DOWEL .CLAVETTE	1	1				
15	6CJ–43841–00	.PISTON, SHUTTLE .PISTON	1	1				
16	6H1–43883–00	.O-RING .JOINT TORIQUE	1	1				
17	6CJ–4384M–00	.PISTON, SHUTTLE 2 .PISTON 2	1	1				
18	69A–4384F–00	.SEAL, MAIN VALVE .JOINT	2	2				
19	99002–03600	.CIRCLIP .CIRCLIP	2	2				
20	6C6–4387G–00	.WASHER .RONDELLE	2	2				
21	6C6–43853–00	.SPRING, MAIN VALVE .RESSORT	2	2				
22	93505–32038	.BALL .BILLE	6	6				
23	69J–4389J–00	.O-RING .JOINT TORIQUE	2	2				
24	6GR–43851–00	.SEAT, RELIEF VALVE .SIEGE	1	1				
25	93210–064A5	.O-RING .JOINT TORIQUE	1	1				
26	6C5–43855–10	.SPRING, UP RELIEF .RESSORT	1	1				
27	93501–08001	.BALL .BILLE	2	2				

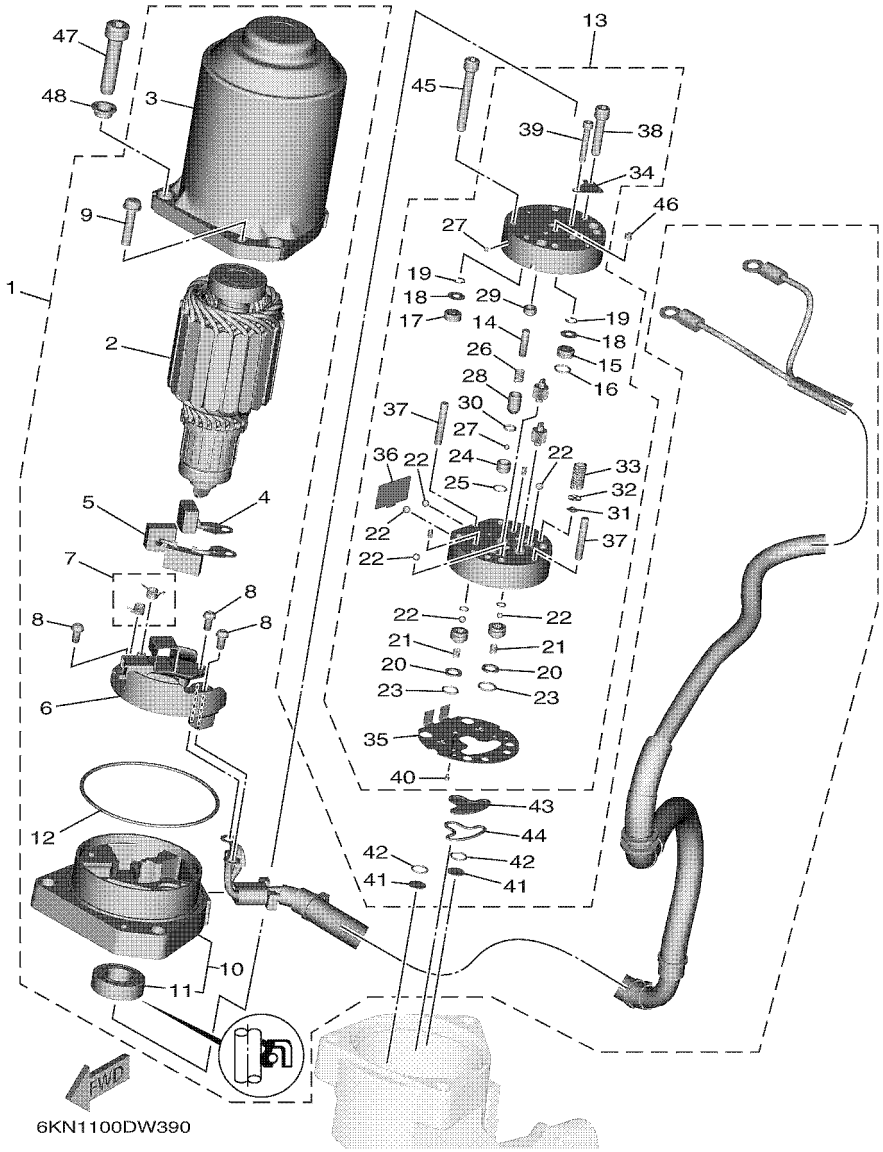

FIG. 39 POWER TRIM & TILT ASSY 2 — PUISSANCE PARER ET INCLINER 2

REF. NO.	PART NO. N° PIECES	DESCRIPTION DESCRIPTION	6KN3	6LB3				REMARKS REMARQUES
28	6D8–43844–00	.PIN, VALVE SUPPORT .GOUPILLE	1	1				
29	6D8–43843–00	.SCREW, VALVE LOCK .VIS	1	1				
30	93210–04N51	.O-RING .JOINT TORIQUE	1	1				
31	6H1–4384G–11	.SEAL, RELIEF VALVE .JOINT	1	1				
32	6H1–43844–10	.PIN, VALVE SUPPORT .GOUPILLE	1	1				
33	6GR–43856–00	.SPRING, DOWN RELIEF .RESSORT	1	1				
34	6D8–4382L–00	.CAP, RELIEF VALVE .CAPUCHON	1	1				
35	6GR–43895–00	.SEAT, RELIEF VALVE .SIEGE	1	1				
36	6C5–43854–00	.SPRING, MANUAL RELEASE .RESSORT	1	1				
37	93604–26256	.PIN, DOWEL .CLAVETTE	2	2				
38	91318–05030	.BOLT .BOULON	2	2				
39	91318–03025	.BOLT .BOULON	2	2				
40	91318–03005	.BOLT .BOULON	1	1				
41	6C6–43817–00	FILTER 2 FILTRE 2	2	2				
42	69J–4389J–00	O-RING JOINT TORIQUE	2	2				
43	6C5–43816–00	FILTER 1 FILTRE 1	1	1				
44	6C5–4380G–00	PLATE PLAQUE	1	1				
45	91318–05045	BOLT BOULON	4	4				
46	69J–43831–00	CONNECTOR, SHAFT RACCORD	1	1				
47	90110–08M05	BOLT, HEXAGON SOCKET HEAD BOULON, TETE HEXAGONALE CREUSE	3	3				
48	6GR–23113–00	COLLAR COLLIER	3	3				

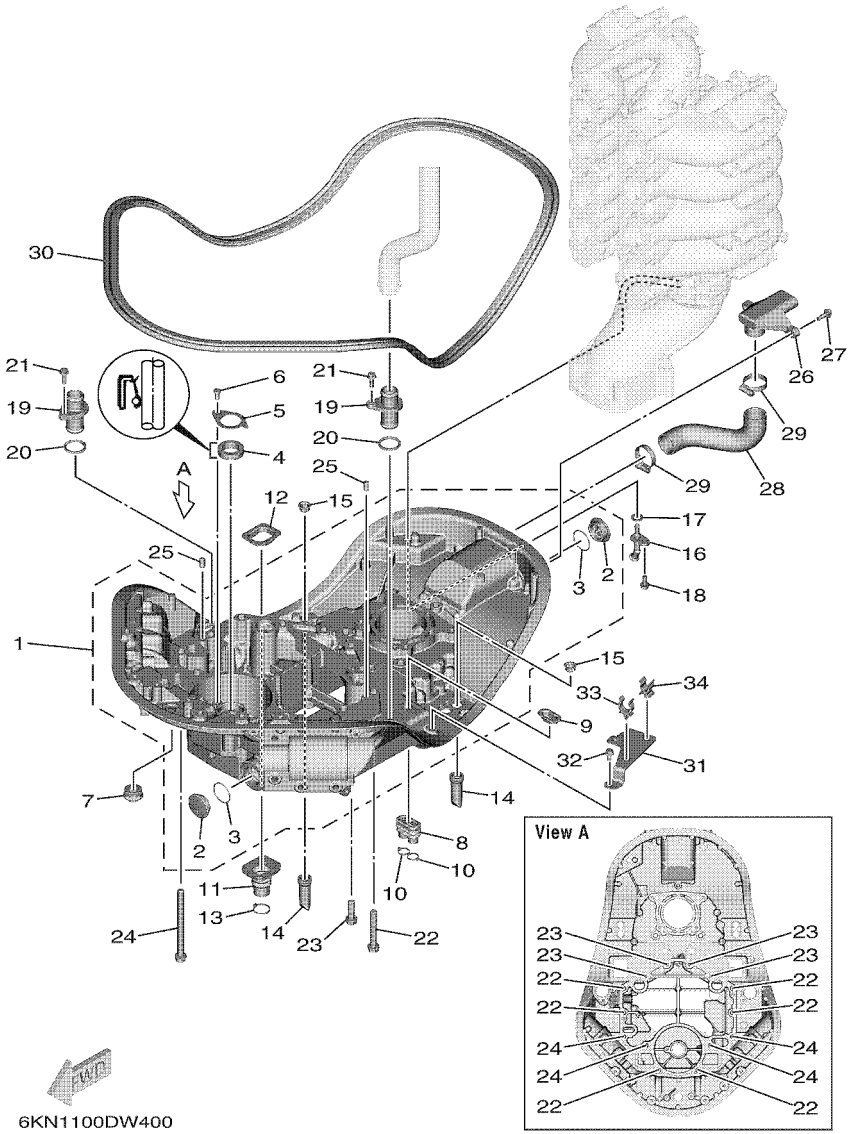

FIG. 40 UPPER CASING 1 — FOURREAU 1

REF. NO.	PART NO. N° PIECES	DESCRIPTION DESCRIPTION	6KN3	6LB3				REMARKS REMARQUES
1	6GR–41137–00	GUIDE, EXHAUST COLLECTEUR D'ECHAPPEMENT	1	1				
2	90340–32011	.PLUG, STRAIGHT SCREW .PLOT, FILETE DROIT	2	2				
3	93210–32172	.O-RING .JOINT TORIQUE	2	2				
4	93102–26004	OIL SEAL JOINT SPY	1	1				
5	6GR–41297–00	WASHER, 1 RONDELLE 1	1	1				
6	97D95–06012	BOLT, HEXAGON DEEP RECESS VIS HEXAGONAL	1	1				
7	6AW–42724–01	GROMMET PASSE-FIL	1	1				
8	6H1–42726–22	GROMMET PASSE-FIL	2	2				
9	6BG–42384–00	SEAL, CAP JOINT, CAPUCHON	2	2				
10	90465–11M10	CLAMP BRIDE	4	4				
11	6GR–42724–01	GROMMET PASSE-FIL	1	1				
12	6GR–42384–00	SEAL, CAP JOINT, CAPUCHON	1	1				
13	90465–11M59	CLAMP BRIDE	1	1				
14	6DA–42717–01	RUBBER, SEAL 2 JOINT EN CAOUTCHOUC 2	4	4				
15	6DA–42384–00	SEAL, CAP JOINT, CAPUCHON	4	4				
16	6GR–44391–00	NIPPLE, HOSE RACCORD D'ESSENCE	1	1				
17	60V–42747–10	PAD PASTILLE	1	1				
18	95D95–06016	BOLT, FLANGE DEEP RECESS BOULON FIXATION	1	1				
19	6GR–12584–00	JOINT, HOSE 3 JOINT DE TUYAU 3	2	2				
20	6GR–44366–01	DAMPER, WATER SEAL 2 JOINT, TUBE D'EAU 2	2	2				
21	95D95–06020	BOLT, FLANGE DEEP RECESS BOULON FIXATION	2	2				
22	97E75–10570	BOLT, HEXAGON W/W DEEP RECESS VIS HEXAGONAL AVC RONDELLE	6	6				
23	90119–10040	BOLT, WITH WASHER BOULON, AVEC RONDELLE	4	4				
24	90119–10075	BOLT, WITH WASHER BOULON, AVEC RONDELLE	4	4				
25	93608–16M16	PIN, DOWEL AXE	2	2				
26	6GR–14753–00	SILENCER, EXHAUST SIELENCIEUX, ECHAPPEMENT	1	1				
27	95D95–06020	BOLT, FLANGE DEEP RECESS BOULON FIXATION	2	2				

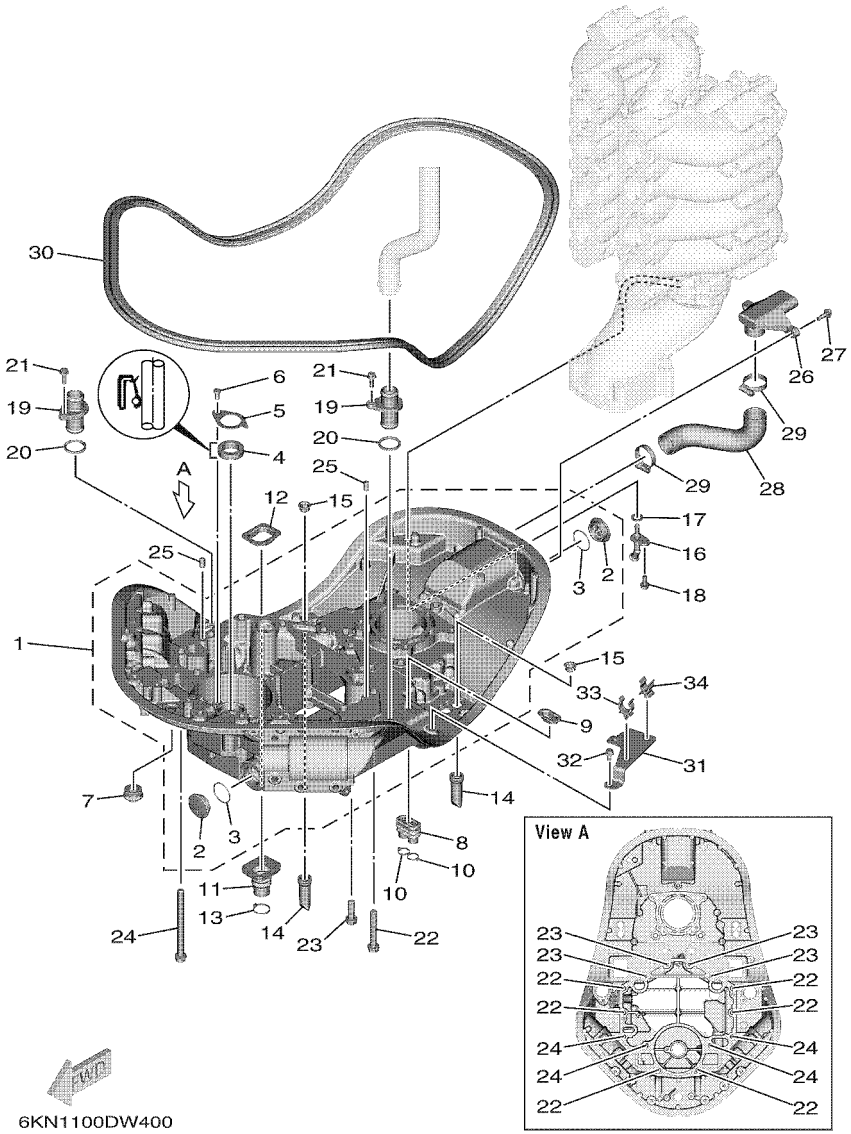

FIG. 40 UPPER CASING 1 — FOURREAU 1

REF. NO.	PART NO. N° PIECES	DESCRIPTION DESCRIPTION	6KN3	6LB3				REMARKS REMARQUES
28	6GR–45135–00	PIPE TUYAU	1	1				
29	90450–35003	HOSE CLAMP ASSY BRIDE, DE DURITE	2	2				
30	6GR–42716–00	RUBBER SEAL 1 JOINT EN CAOUTCHOUC 1	1	1				
31	6GR–82398–00	PLATE 3 PLAQUETTE 3	1	1				
32	95D95–06012	BOLT, FLANGE DEEP RECESS BOULON FIXATION	2	2				
33	90464–19M45	CLAMP BRIDE	1	1				
34	90464–12015	CLAMP BRIDE	1	1				

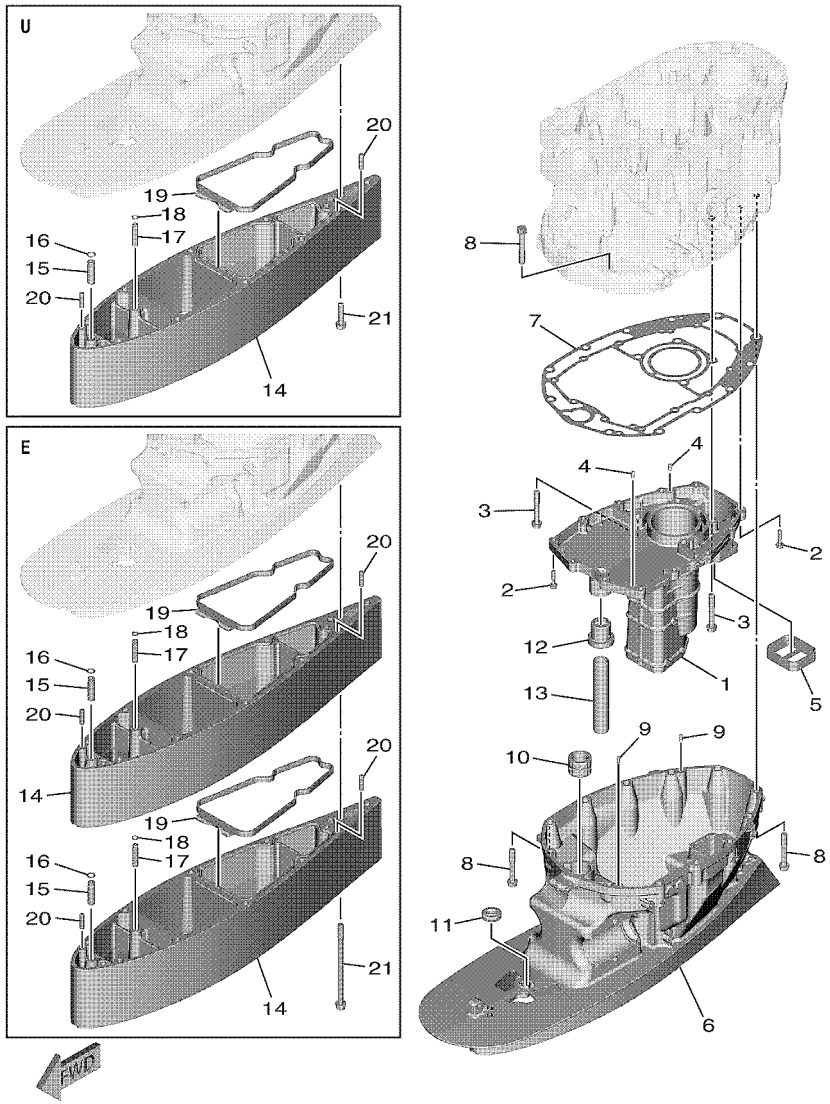

FIG. 41 UPPER CASING 2 — FOURREAU 2

REF. NO.	PART NO. N° PIECES	DESCRIPTION DESCRIPTION	6KN3	6LB3				REMARKS REMARQUES
1	6GR–14711–01	MUFFLER 1 POT D'ECHAPPEMENT 1	1	1				
2	95D95–06030	BOLT, FLANGE DEEP RECESS BOULON FIXATION	12	12				
3	97E75–10570	BOLT, HEXAGON W/W DEEP RECESS VIS HEXAGONAL AVC RONDELLE	4	4				
4	93606–12019	PIN, DOWEL GOUPILLE	2	2				
5	6GR–45127–00	SEAL JOINT	1	1				
6	6GR–45111–00–8D	CASING, UPPER FOURREAU	1	1				UR GRAY UR GRAY
	6GR–45111–00–CE	CASING, UPPER FOURREAU	1	1				UR WHITE UR WHITE
7	6GR–45113–00	GASKET, UPPER CASING JOINT, TUBE D'ARBRE	1	1				
8	97E75–10570	BOLT, HEXAGON W/W DEEP RECESS VIS HEXAGONAL AVC RONDELLE	12	12				
9	93606–12019	PIN, DOWEL GOUPILLE	2	2				
10	6GR–45318–00	BUSHING, DRIVE SHAFT DOUILLE, ARBRE MOTEUR	1	1				
11	6GR–44521–00	SEAL JOINT	1	1				
12	6GR–44367–01	DAMPER, WATER SEAL 3 JOINT TUBE D'EAU 3	1	1				
13	90440–27005	PIPE DURITE	1	1				UR X(25.2") UR X(25.2")
	90440–27006	PIPE DURITE	1	1				UR U(30.2") UR U(30.2")
	90440–27007	PIPE DURITE	1	1				UR E(35.2") UR E(35.2")
14	6GR–45211–00–8D	EXTENSION EXTENSION	1	1				UR GRAY, U(30.2") UR GRAY, U(30.2")
	6GR–45211–00–8D	EXTENSION EXTENSION	2	2				UR GRAY, E(35.2") UR GRAY, E(35.2")
	6GR–45211–00–CE	EXTENSION EXTENSION	1	1				UR WHITE,U(30.2") UR WHITE,U(30.2")
	6GR–45211–00–CE	EXTENSION EXTENSION	2	2				UR WHITE,E(35.2") UR WHITE,E(35.2")
15	6GR–45398–00	NIPPLE, 1 RACCORD, 1	1	1				UR U(30.2") UR U(30.2")
	6GR–45398–00	NIPPLE, 1 RACCORD, 1	2	2				UR E(35.2") UR E(35.2")
16	93210–10010	O-RING JOINT TORIQUE	1	1				UR U(30.2") UR U(30.2")
	93210–10010	O-RING JOINT TORIQUE	2	2				UR E(35.2") UR E(35.2")
17	6GR–45399–00	NIPPLE, 2 RACCORD, 2	1	1				UR U(30.2") UR U(30.2")
	6GR–45399–00	NIPPLE, 2 RACCORD, 2	2	2				UR E(35.2") UR E(35.2")
18	93210–07100	O-RING JOINT TORIQUE	1	1				UR U(30.2") UR U(30.2")

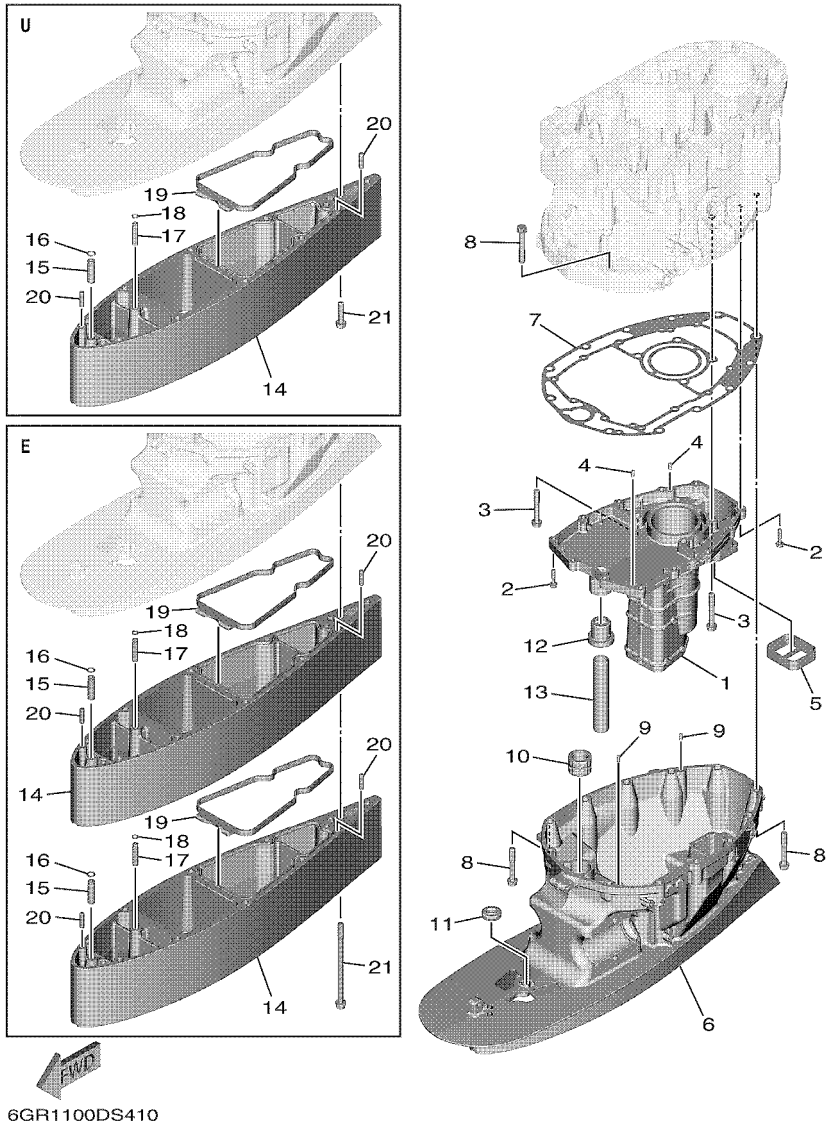

FIG. 41 UPPER CASING 2 — FOURREAU 2

REF. NO.	PART NO. N° PIECES	DESCRIPTION DESCRIPTION	6KN3	6LB3				REMARKS REMARQUES
18	93210–07100	O-RING JOINT TORIQUE	2	2				UR E(35.2") UR E(35.2")
19	6GR–45375–01	DAMPER, SEAL BOURRELET, CAOUTCHOUC	1	1				UR U(30.2") UR U(30.2")
	6GR–45375–01	DAMPER, SEAL BOURRELET, CAOUTCHOUC	2	2				UR E(35.2") UR E(35.2")
20	99480–08030	PIN GOUPILLE	2	2				UR U(30.2") UR U(30.2")
	99480–08030	PIN GOUPILLE	4	4				UR E(35.2") UR E(35.2")
21	90119–10024	BOLT, WITH WASHER BOULON, AVEC RONDELLE	1	1				UR U(30.2") UR U(30.2")
	90119–10009	BOLT, WITH WASHER BOULON, AVEC RONDELLE	1	1				UR E(35.2") UR E(35.2")

FIG. 42 UPPER CASING 3 — FOURREAU 3

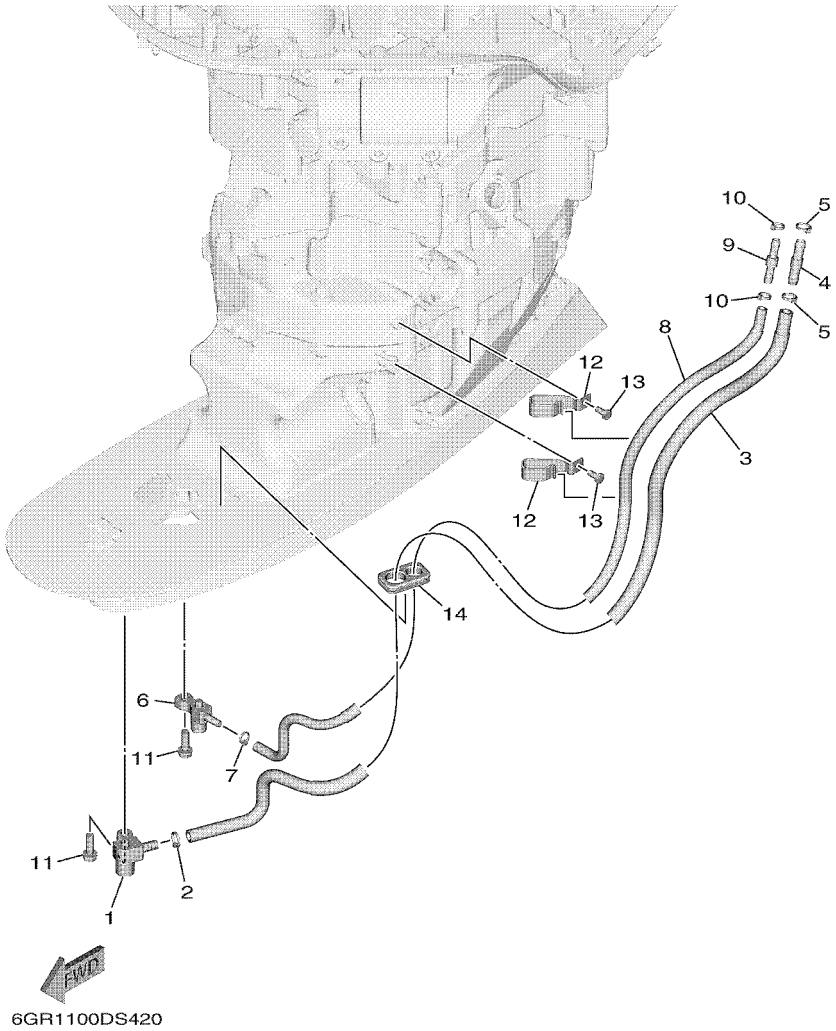

REF. NO.	PART NO. N° PIECES	DESCRIPTION DESCRIPTION	6KN3	6LB3				REMARKS REMARQUES
1	6GR–45368–00	JOINT, HOSE 1 JOINT DE TUYAU 1	1	1				
2	90465–11M10	CLAMP BRIDE	1	1				
3	6GR–4383K–00	HOSE, OIL 1 DURITE A HUILE	1	1				
4	6AW–42785–00	PIPE DURITE	1	1				
5	90465–11M10	CLAMP BRIDE	2	2				
6	6GR–45369–00	JOINT, HOSE 2 JOINT DE TUYAU 2	1	1				
7	90465–11M10	CLAMP BRIDE	1	1				
8	6GR–2318F–00	HOSE, AIR TUYAU A AIR	1	1				
9	6E5–24379–00	PIPE, JOINT 4 DURITE RACCORDEMENT 4	1	1				
10	90465–11M10	CLAMP BRIDE	2	2				
11	97E95–08525	BOLT, HEXAGON W/W DEEP RECESS VIS HEXAGONAL AVC RONDELLE	2	2				
12	6GR–12491–00	CLAMP 1 COLLIER 1	2	2				
13	97D95–06012	BOLT, HEXAGON DEEP RECESS VIS HEXAGONAL	2	2				
14	6GR–45159–01	DAMPER CAOUTCHOUC, JOINT	1	1				

FIG. 43 OIL PAN — VENTILATEUR D'HUILE

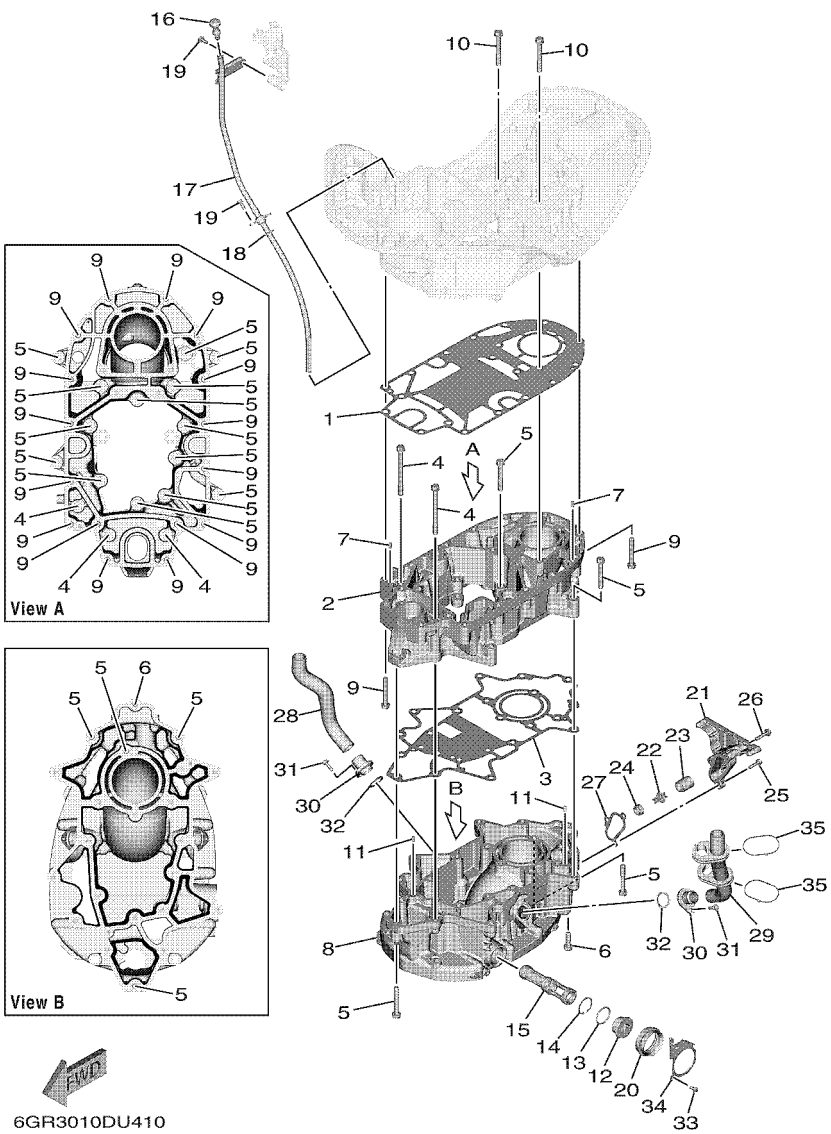

REF. NO.	PART NO. N° PIECES	DESCRIPTION DESCRIPTION	6KN3	6LB3				REMARKS REMARQUES
1	6GR–15312–01	GASKET, OIL PAN JOINT DE VENTILATEUR D'HUILE	1	1				
2	6GR–1531B–01	OIL PAN 2 VENTILATEUR D'HUILE 2	1	1				
3	6GR–1531C–01	GASKET, OIL PAN 2 JOINT DE VENTILATEUR D'HUILE 2	1	1				
4	90119–10074	BOLT, WITH WASHER BOULON, AVEC RONDELLE	3	3				
5	97E75–10570	BOLT, HEXAGON W/W DEEP RECESS VIS HEXAGONAL AVC RONDELLE	18	18				
6	90119–10040	BOLT, WITH WASHER BOULON, AVEC RONDELLE	1	1				
7	93606–12019	PIN, DOWEL GOUPILLE	2	2				
8	6GR–15311–01	OIL PAN VENTILATEUR D'HUILE	1	1				
9	97E75–10570	BOLT, HEXAGON W/W DEEP RECESS VIS HEXAGONAL AVC RONDELLE	16	16				
10	97E75–10580	BOLT, HEXAGON W/W DEEP RECESS VIS HEXAGONAL AVC RONDELLE	4	4				
11	93606–12019	PIN, DOWEL GOUPILLE	2	2				
12	6GR–15351–00	PLUG,DRAIN 1 PLOT, VIDANGE	1	1				
13	93210–34633	O-RING JOINT TORIQUE	1	1				
14	93420–36M01	CIRCLIP CIRCLIP, TYPE S	1	1				
15	6GR–13411–00	STRAINER, OIL FILTRE, HUILE	1	1				
16	6GR–15362–00	PLUG, OIL LEVEL PLOT, NIVEAU D'HUILE	1	1				
17	6GR–15377–00	GUIDE, INLET GUIDE D'ADMISSION	1	1				
18	93210–19MJ3	O-RING JOINT TORIQUE	1	1				
19	95D95–06016	BOLT, FLANGE DEEP RECESS BOULON FIXATION	3	3				
20	6GR–15316–01	DAMPER 1 AMORTISSEUR 1	1	1				
21	6GR–1246A–00	COVER 1 COUVERCLE 1	1	1				
22	6G5–12416–00	VALVE, PRESSURE CONTROL SOUPAPE DE CONTROLEUR PRESS	1	1				
23	90501–200A2	SPRING, COMPRESSION RESSORT, COMPRESSION	1	1				
24	90480–20M05	GROMMET PASSE-FIL	1	1				
25	95D95–06025	BOLT, FLANGE DEEP RECESS BOULON FIXATION	1	1				
26	95D95–06040	BOLT, FLANGE DEEP RECESS BOULON FIXATION	2	2				
27	6EK–12435–A0	GASKET JOINT	1	1				

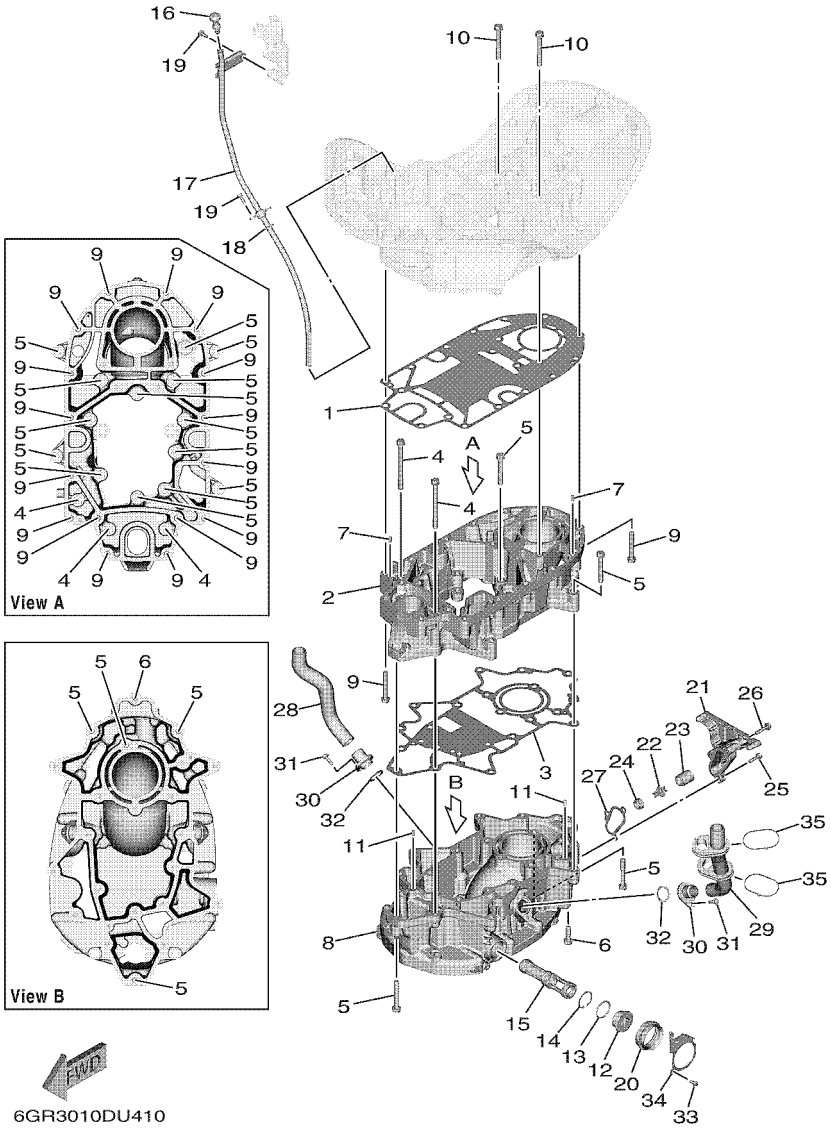

FIG. 43 OIL PAN — VENTILATEUR D'HUILE

REF. NO.	PART NO. N° PIECES	DESCRIPTION DESCRIPTION	6KN3	6LB3				REMARKS REMARQUES
28	6GR–1243F–00	HOSE,3 DURITE 3	1	1				
29	6GR–1257A–01	HOSE ASSY 1 ENS. MANGUERA 1	1	1				
30	6GR–12581–00	JOINT, HOSE 1 JOINT DE TUYAU	2	2				
31	95D95–06020	BOLT, FLANGE DEEP RECESS BOULON FIXATION	2	2				
32	6GR–44366–01	DAMPER, WATER SEAL 2 JOINT, TUBE D'EAU 2	2	2				
33	97D95–06012	BOLT, HEXAGON DEEP RECESS VIS HEXAGONAL	1	1				
34	6GR–45152–00	COVER, UPPER CASING 2 CAPUCHON FOURREAU	1	1				
35	90464–66001	CLAMP BRIDE	2	2				

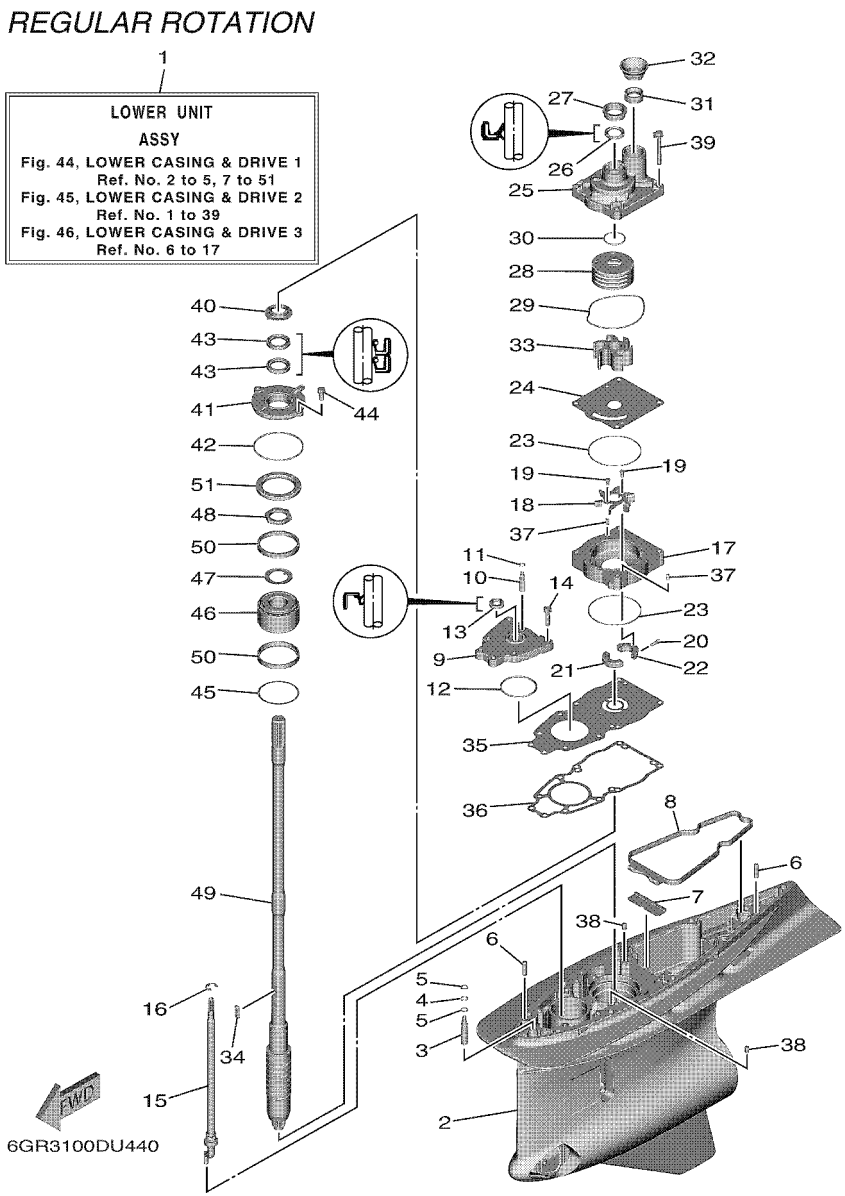

FIG. 44 LOWER CASING & DRIVE 1 — BOITIER D'HELICE TRANSMISSION1

REF. NO.	PART NO. N° PIECES	DESCRIPTION DESCRIPTION	6KN3	6LB3				REMARKS REMARQUES
1	6GR–45300–06–8D	LOWER UNIT ASSY UNITE INFERIEURE (ENS.)	1	1				UR GRAY, X(25.2") UR GRAY, X(25.2")
	6GR–45300–06–CE	LOWER UNIT ASSY UNITE INFERIEURE (ENS.)	1	1				UR WHITE, X(25.2") UR WHITE, X(25.2")
	6GR–45300–16–8D	LOWER UNIT ASSY UNITE INFERIEURE (ENS.)	1	1				UR GRAY, U(30.2") UR GRAY, U(30.2")
	6GR–45300–16–CE	LOWER UNIT ASSY UNITE INFERIEURE (ENS.)	1	1				UR WHITE, U(30.2") UR WHITE, U(30.2")
	6GR–45300–26–8D	LOWER UNIT ASSY UNITE INFERIEURE (ENS.)	1	1				UR GRAY, E(35.2") UR GRAY, E(35.2")
	6GR–45300–26–CE	LOWER UNIT ASSY UNITE INFERIEURE (ENS.)	1	1				UR WHITE, E(35.2") UR WHITE, E(35.2")
2	6GR–45311–02–8D	CASING, LOWER BOITIER D'HELICE	1	1				UR GRAY UR GRAY
	6GR–45311–02–CE	CASING, LOWER BOITIER D'HELICE	1	1				UR WHITE UR WHITE
3	6GR–45308–00	VALVE ASSY 1 CLAPET COMPLET 1	1	1				
4	93210–10010	O-RING JOINT TORIQUE	1	1				
5	6GR–43873–00	RING, BACK UP RESSORT	2	2				
6	99480–08030	PIN GOUPILLE	2	2				
7	6GR–45376–00	GUIDE, SEAL DAMPER BUTEE, JOINT CAOUTCHOUC	1	1				
8	6GR–45375–01	DAMPER, SEAL BOURRELET, CAOUTCHOUC	1	1				
9	6GR–45321–00	PLATE PLAQUETTE	1	1				
10	6GR–45309–00	VALVE ASSY 2 CLAPET COMPLET 2	1	1				
11	93210–07100	O-RING JOINT TORIQUE	1	1				
12	93210–64488	O-RING JOINT TORIQUE	1	1				
13	93106–14001	OIL SEAL JOINT SPY	1	1				
14	97E95–08535	BOLT, HEXAGON W/W DEEP RECESS VIS HEXAGONAL AVC RONDELLE	6	6				
15	6GR–44150–01	SHIFT CAM ASSY CAME D'INVERSION	1	1				UR X(25.2") UR X(25.2")
	6GR–44150–11	SHIFT CAM ASSY CAME D'INVERSION	1	1				UR U(30.2") UR U(30.2")
	6GR–44150–21	SHIFT CAM ASSY CAME D'INVERSION	1	1				UR E(35.2") UR E(35.2")
16	99002–12600	CIRCLIP CIRCLIP	1	1				
17	6GR–44341–00	HOUSING, WATER PUMP CORPS, POMPE A EAU	1	1				
18	6GR–12451–00	IMPELLER, WATER PUMP ROTOR, DE POMPE A EAU	1	1				
19	97095–05010	BOLT BOULON	2	2				

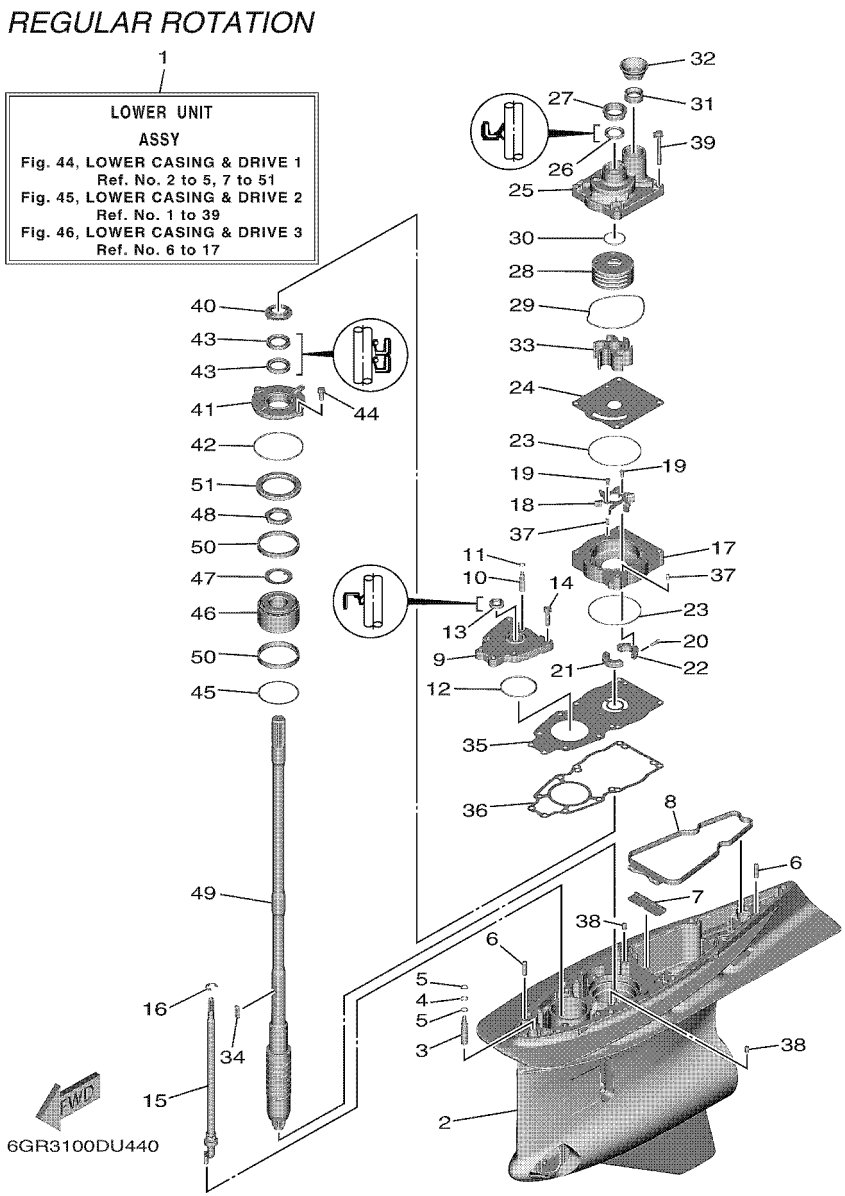

FIG. 44 LOWER CASING & DRIVE 1 — BOITIER D'HELICE TRANSMISSION1

REF. NO.	PART NO. N° PIECES	DESCRIPTION DESCRIPTION	6KN3	6LB3				REMARKS REMARQUES
20	91380–05016	BOLT BOULON	2	2				
21	6GR–44381–00	SPACER 1 ENTRETOISE 1	1	1				
22	6GR–44382–00	SPACER 2 ENTRETOISE 2	1	1				
23	93210–97690	O-RING JOINT TORIQUE	2	2				
24	6GR–44323–00	OUTER PLATE, CARTRIDGE PLAQUE EXTERIEURE	1	1				
25	6GR–44311–00	HOUSING, WATER PUMP CORPS, POMPE A EAU	1	1				
26	93109–26001	OIL SEAL JOINT SPY	1	1				
27	6GR–44312–00	COVER, WATER PUMP HOUSING COUVERCLE	1	1				
28	6GR–44322–00	INSERT, CARTRIDGE CUVETTE	1	1				
29	93211–08001	O-RING JOINT TORIQUE	1	1				
30	93210–37160	O-RING JOINT TORIQUE	1	1				
31	6GR–44365–01	DAMPER, WATER SEAL 1 JOINT, TUBE D'EAU 1	1	1				
32	6GR–44379–00	GUIDE, WATER TUBE GUIDE DE TUBE D'EAU	1	1				
33	6GR–44352–00	IMPELLER TURBINE	1	1				
34	6AW–44336–00	KEY CLAVETTE	1	1				
35	6GR–44328–00	PLATE PLAQUETTE	1	1				
36	6GR–44315–00	GASKET, WATER PUMP JOINT, POMPE A EAU	1	1				
37	93606–12019	PIN, DOWEL GOUPILLE	2	2				
38	93608–12M05	PIN, DOWEL AXE	2	2				
39	90119–08196	BOLT, WITH WASHER BOULON, AVEC RONDELLE	4	4				
40	6GR–45344–00	COVER, OIL SEAL FLASQE, JOINT D'HUILE	1	1				
41	6GR–45335–00	HOUSING, OIL SEAL LOGEMENT DE JOINT SPY	1	1				
42	93210–89535	O-RING JOINT TORIQUE	1	1				
43	93101–30037	OIL SEAL JOINT SPY	2	2				
44	97E95–08520	BOLT, HEXAGON W/W DEEP RECESS VIS HEXAGONAL AVC RONDELLE	2	2				
45	688–45567–01	SHIM (T:0.10MM) CALE (T:0.10MM)	1	1				UR UR
	688–45567–10	SHIM (T:0.12MM) CALE (T:0.12MM)	1	1				UR UR

FIG. 44 LOWER CASING & DRIVE 1 — BOITIER D'HELICE TRANSMISSION1

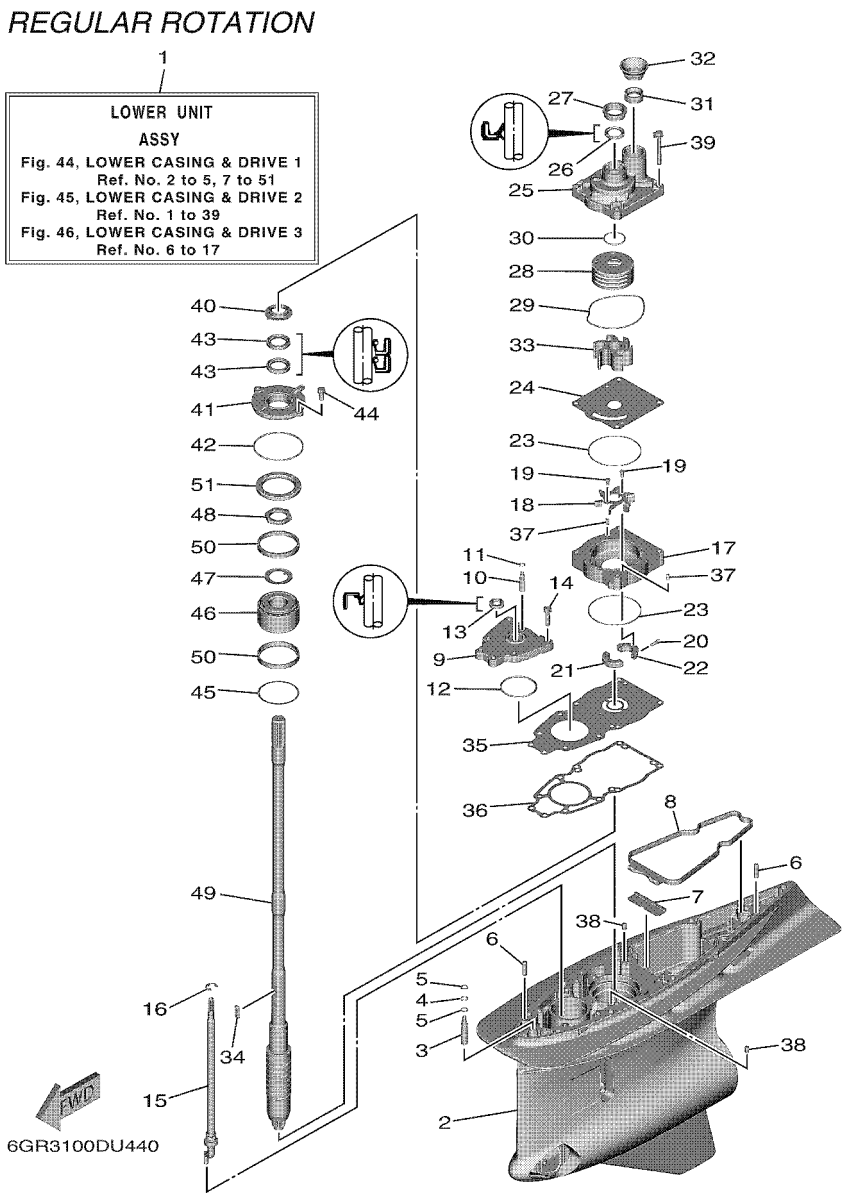

REF. NO.	PART NO. N° PIECES	DESCRIPTION DESCRIPTION	6KN3	6LB3				REMARKS REMARQUES
45	688–45567–20	SHIM (T:0.15MM) CALE (T:0.15MM)	1	1				UR UR
	688–45567–30	SHIM (T:0.18MM) CALE (T:0.18MM)	1	1				UR UR
	688–45567–40	SHIM (T:0.30MM) CALE (T:0.30MM)	1	1				UR UR
	688–45567–50	SHIM (T:0.40MM) CALE (T:0.40MM)	1	1				UR UR
	688–45567–60	SHIM (T:0.50MM) CALE (T:0.50MM)	1	1				UR UR
46	93399–99967	BEARING ROULEMENT	1	1				
47	90214–35M07	WASHER, CLAW RONDELLE, A GRIFFES	1	1				
48	90170–35M34	NUT ECROU	1	1				
49	6GR–45501–00	DRIVE SHAFT COMP. ARBRE MOTEUR COMP.	1	1				UR X(25.2") UR X(25.2")
	6GR–45501–10	DRIVE SHAFT COMP. ARBRE MOTEUR COMP.	1	1				UR U(30.2") UR U(30.2")
	6GR–45501–20	DRIVE SHAFT COMP. ARBRE MOTEUR COMP.	1	1				UR E(35.2") UR E(35.2")
50	6GR–45539–00	SPACER 2 ENTRETOISE 2	2	2				
51	6GR–45244–00	NUT ECROU	1	1				

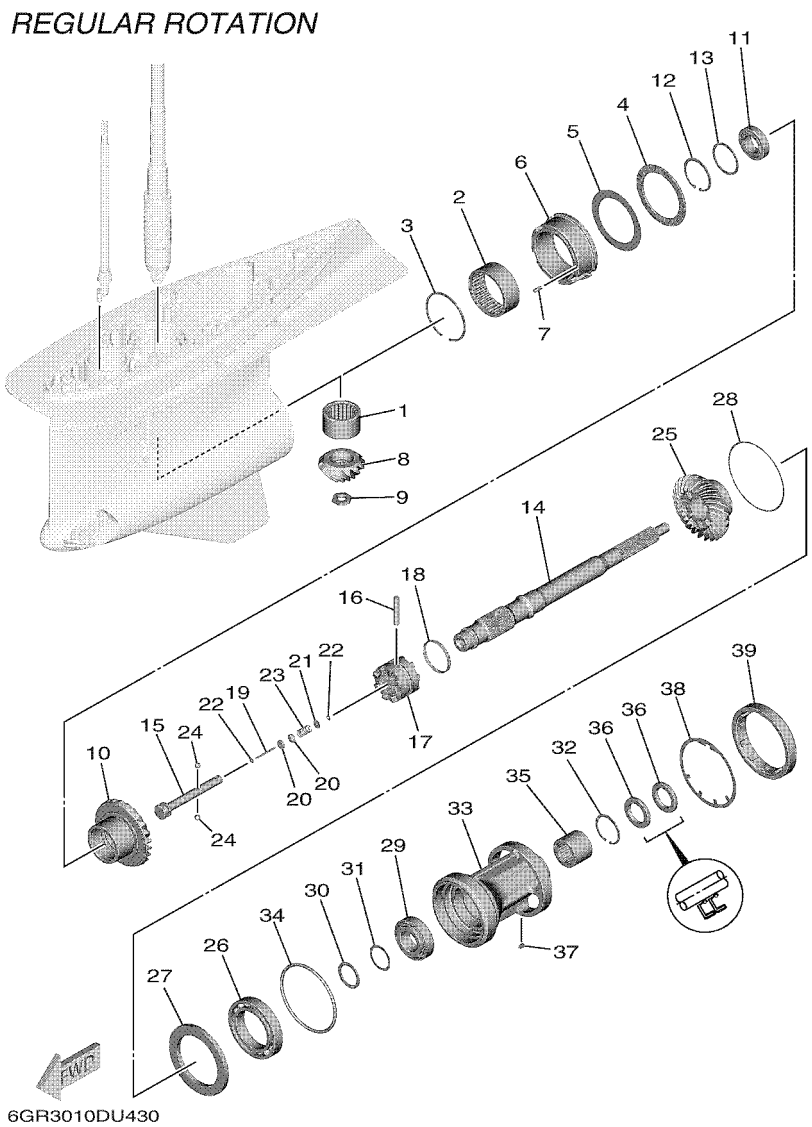

FIG. 45 LOWER CASING & DRIVE 2 — BOITIER D'HELICE TRANSMISSION2

REF. NO.	PART NO. N° PIECES	DESCRIPTION DESCRIPTION	6KN3	6LB3				REMARKS REMARQUES
1	93311–944A0	BEARING ROULEMENT	1	1				
2	93311–675A1	BEARING ROULEMENT	1	1				
3	93450–92171	CIRCLIP CIRCLIP	1	1				
4	93340–69012	BEARING CERVEAUX DE DIRECTION	1	1				
5	6GR–45567–00	SHIM (T:2.00MM) CALE (T:2.00MM)	1	1				UR UR
	6GR–45567–10	SHIM (T:2.03MM) CALE (T:2.03MM)	1	1				UR UR
	6GR–45567–20	SHIM (T:2.06MM) CALE (T:2.06MM)	1	1				UR UR
	6GR–45567–30	SHIM (T:2.09MM) CALE (T:2.09MM)	1	1				UR UR
	6GR–45567–40	SHIM (T:2.12MM) CALE (T:2.12MM)	1	1				UR UR
	6GR–45567–50	SHIM (T:2.15MM) CALE (T:2.15MM)	1	1				UR UR
	6GR–45567–60	SHIM (T:2.18MM) CALE (T:2.18MM)	1	1				UR UR
	6GR–45567–70	SHIM (T:2.21MM) CALE (T:2.21MM)	1	1				UR UR
6	6GR–45824–00	ADAPTER ADAPTATEUR	1	1				
7	93606–16117	PIN, DOWEL GOUPILLE	1	1				
8	6GR–45551–00	PINION (14T) PIGNON D'ATTAQUE (14D)	1	1				
9	90170–18009	NUT ECROU	1	1				
10	6GR–45561–00	GEAR 1 (25T) PIGNON 1 (25T)	1	1				
11	93332–000A0	BEARING ROULEMENT	1	1				
12	99009–62500	CIRCLIP CIRCLIP	1	1				
13	90201–54008	WASHER, PLATE RONDELLE, PLATE	1	1				
14	6GR–45611–00	SHAFT, PROPELLER ARBRE, HELICE	1	1				
15	6GR–45634–00	SLIDE, SHIFT CONTRE-POUSSOIR	1	1				
16	6GR–45632–00	PIN, CROSS GOUPILLE DE CRABOT	1	1				
17	6GR–45631–00	CLUTCH, DOG CRABOT	1	1				
18	6GR–45633–00	RING, CROSS PIN JONC, GOUPILLE CRABOT	1	1				
19	6H1–45668–00	SHAFT, FREE 1 AXE 1	1	1				
20	61A–45635–00	PLUNGER, SHIFT POUSSOIR D'EMBRAYAGE	2	2				

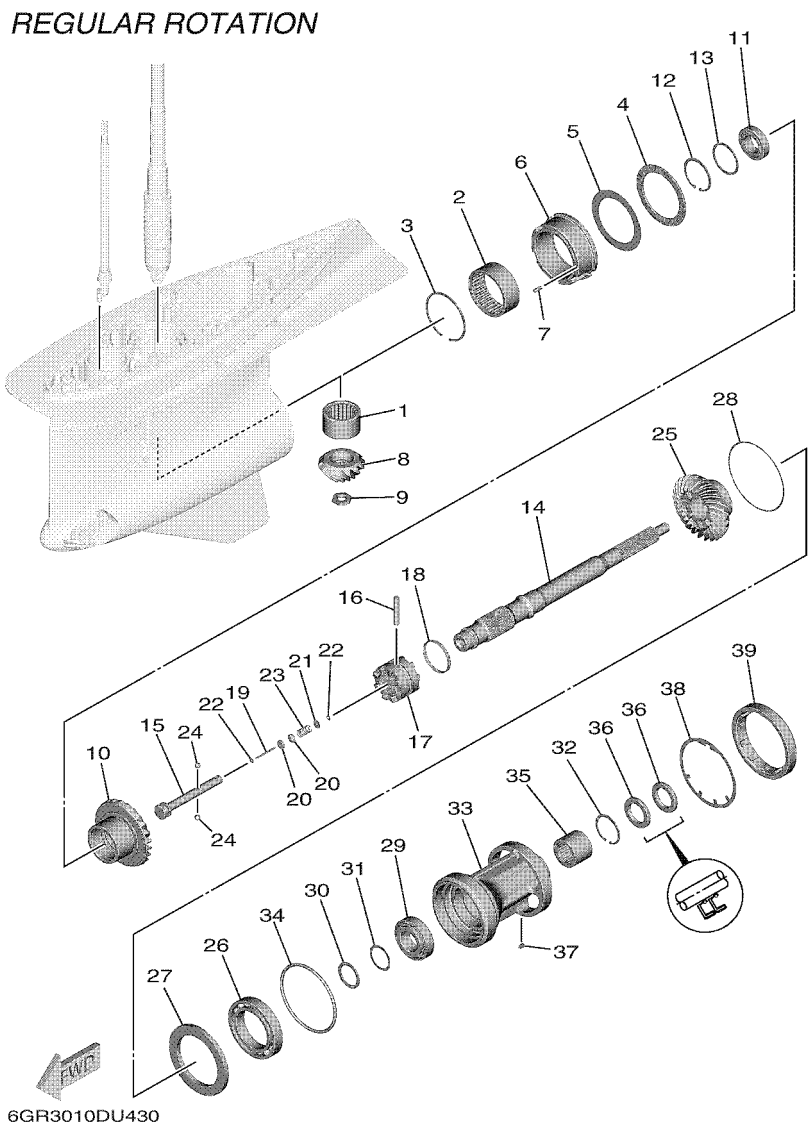

FIG. 45 LOWER CASING & DRIVE 2 — BOITIER D'HELICE TRANSMISSION2

REF. NO.	PART NO. N° PIECES	DESCRIPTION DESCRIPTION	6KN3	6LB3				REMARKS REMARQUES
21	90201–02M00	WASHER, PLATE RONDELLE, PLATE	1	1				
22	90183–02M03	NUT, SPRING ECROU, RESSORT	2	2				
23	90501–10M77	SPRING, COMPRESSION RESSORT, COMPRESSION	1	1				
24	93501–04011	BALL BILLE	2	2				
25	6GR–45571–00	GEAR 2 (25T) PIGNON 2 (25T)	1	1				
26	93306–01501	BEARING ROULEMENT	1	1				
27	6GR–45576–00	WASHER, THRUST 2 RONDELLE DE CALAGE 2	1	1				
28	6GR–45577–00	SHIM (T:0.10MM) CALE (T:0.10MM)	1	1				UR UR
	6GR–45577–10	SHIM (T:0.12MM) CALE (T:0.12MM)	1	1				UR UR
	6GR–45577–20	SHIM (T:0.15MM) CALE (T:0.15MM)	1	1				UR UR
	6GR–45577–30	SHIM (T:0.18MM) CALE (T:0.18MM)	1	1				UR UR
	6GR–45577–40	SHIM (T:0.30MM) CALE (T:0.30MM)	1	1				UR UR
	6GR–45577–50	SHIM (T:0.40MM) CALE (T:0.40MM)	1	1				UR UR
	6GR–45577–60	SHIM (T:0.50MM) CALE (T:0.50MM)	1	1				UR UR
29	93332–00042	BEARING ROULEMENT	1	1				
30	90201–40008	WASHER, PLATE RONDELLE, PLATE	1	1				
31	6GR–45578–00	SHIM (T:0.10MM) CALE (T:0.10MM)	1	1				UR UR
	6GR–45578–10	SHIM (T:0.12MM) CALE (T:0.12MM)	1	1				UR UR
	6GR–45578–20	SHIM (T:0.15MM) CALE (T:0.15MM)	1	1				UR UR
	6GR–45578–30	SHIM (T:0.18MM) CALE (T:0.18MM)	1	1				UR UR
	6GR–45578–40	SHIM (T:0.30MM) CALE (T:0.30MM)	1	1				UR UR
	6GR–45578–50	SHIM (T:0.40MM) CALE (T:0.40MM)	1	1				UR UR
	6GR–45578–60	SHIM (T:0.50MM) CALE (T:0.50MM)	1	1				UR UR
	6GR–45578–70	SHIM (T:1.00MM) CALE (T:1.00MM)	1	1				UR UR
32	99009–55500	CIRCLIP CIRCLIP	1	1				
33	6GR–45332–00	HOUSING, BEARING FLASQUE, ROULEMENT	1	1				
34	93211–26001	O-RING JOINT TORIQUE	1	1				

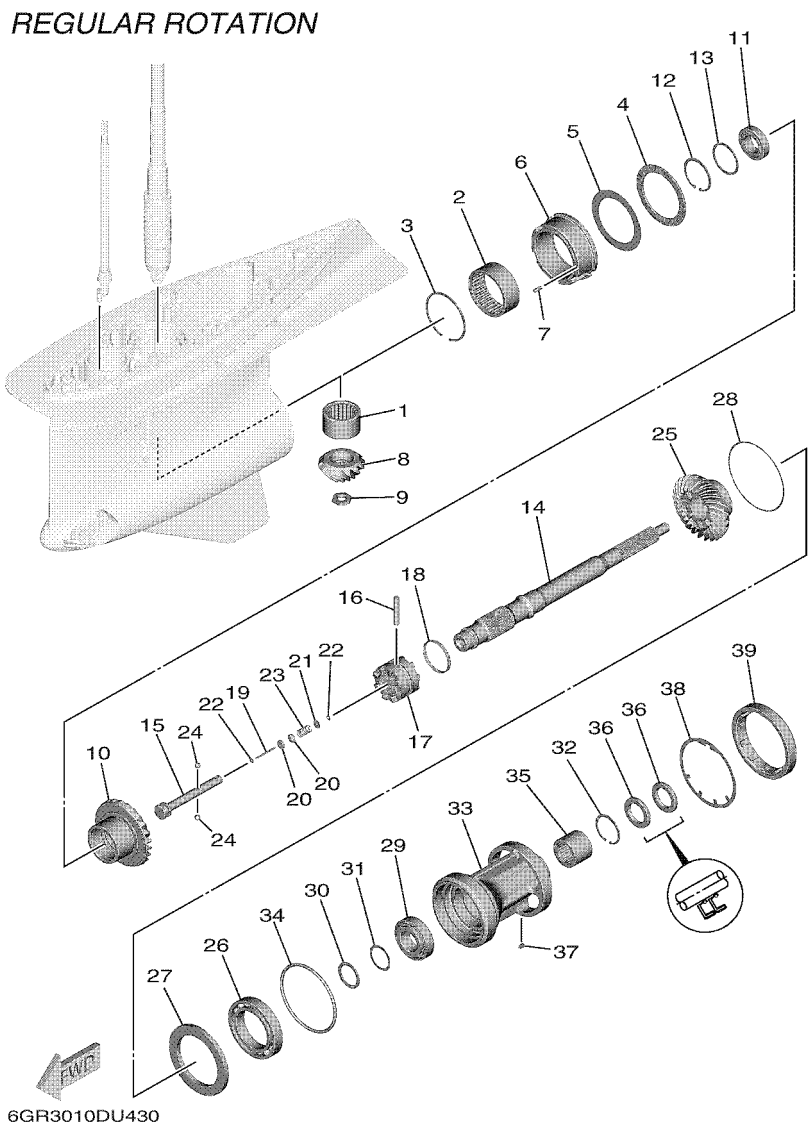

FIG. 45 LOWER CASING & DRIVE 2 — BOITIER D'HELICE TRANSMISSION2

REF. NO.	PART NO. N° PIECES	DESCRIPTION DESCRIPTION	6KN3	6LB3				REMARKS REMARQUES
35	93311–737A2	BEARING ROULEMENT	1	1				
36	93101–37001	OIL SEAL JOINT SPY	2	2				
37	90282–05008	KEY, STRAIGHT CLAVETTE, DROITE	1	1				
38	6GR–45383–00	WASHER, CLAW FREIN D'ECROU	1	1				
39	6GR–45384–00	NUT ECROU	1	1				

FIG. 46 LOWER CASING & DRIVE 3 — BOITIER D'HELICE TRANSMISSION3

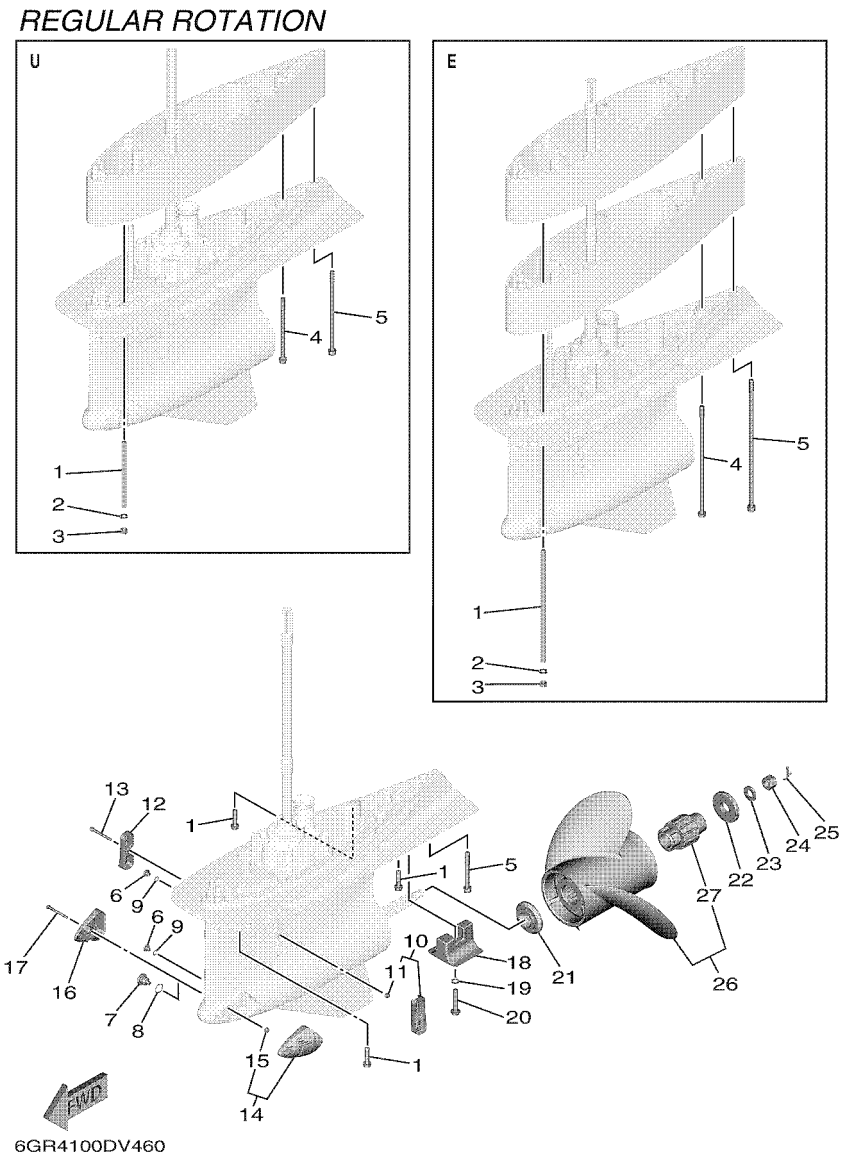

REF. NO.	PART NO. N° PIECES	DESCRIPTION DESCRIPTION	6KN3	6LB3				REMARKS REMARQUES
1	90119–10024	BOLT, WITH WASHER BOULON, AVEC RONDELLE	9	9				UR X(25.2") UR X(25.2")
	90116–10067	BOLT, STUD GOUJON	8	8				UR U(30.2") UR U(30.2")
	90116–10066	BOLT, STUD GOUJON	8	8				UR E(35.2") UR E(35.2")
2	92995–10600	WASHER RONDELLE	8	8				U(30.2"),E(35.2") U(30.2"),E(35.2")
3	95380–10600	NUT ECROU	8	8				U(30.2"),E(35.2") U(30.2"),E(35.2")
4	90119–10009	BOLT, WITH WASHER BOULON, AVEC RONDELLE	1	1				UR U(30.2") UR U(30.2")
	90119–10060	BOLT, WITH WASHER BOULON, AVEC RONDELLE	1	1				UR E(35.2") UR E(35.2")
5	90110–10053	BOLT, HEXAGON SOCKET HEAD BOULON, TETE HEXAGONALE CREUSE	1	1				UR X(25.2") UR X(25.2")
	90110–10054	BOLT, HEXAGON SOCKET HEAD BOULON, TETE HEXAGONALE CREUSE	1	1				UR U(30.2") UR U(30.2")
	90110–10055	BOLT, HEXAGON SOCKET HEAD BOULON, TETE HEXAGONALE CREUSE	1	1				UR E(35.2") UR E(35.2")
6	90340–08003	PLUG, STRAIGHT SCREW PLOT, FILETE DROIT	2	2				
7	6GR–45341–00	PLUG, DRAIN BOUCHON DE VIDANGE	1	1				
8	93210–19123	O-RING JOINT TORIQUE	1	1				
9	93210–09165	O-RING JOINT TORIQUE	2	2				
10	6GR–45214–01	COVER, WATER INLET 1 GRILLE, ENTREE D'EAU 1	1	1				
11	90185–06M07	.NUT, SELF-LOCKING .ECROU,AUTO-BLOQUANT	1	1				
12	6GR–45215–01	COVER, WATER INLET 2 GRILLE, ENTREE D'EAU 2	1	1				
13	90110–06425	BOLT, HEXAGON SOCKET HEAD BOULON, TETE HEXAGONALE CREUSE	1	1				
14	6KN–45224–00	COVER, WATER INLET 3 GRILLE, ENTREE D'EAU 3	1	1				
15	90185–06M07	.NUT, SELF-LOCKING .ECROU,AUTO-BLOQUANT	1	1				
16	6KN–45225–00	COVER, WATER INLET 4 GRILLE, ENTREE D'EAU 4	1	1				
17	90110–06425	BOLT, HEXAGON SOCKET HEAD BOULON, TETE HEXAGONALE CREUSE	1	1				
18	6AW–45373–00	ANODE ANODE	1	1				
19	92990–10300	WASHER RONDELLE, PLATE	1	1				
20	90105–10257	BOLT, FLANGE BOULON, A COLLERETTE	1	1				
21	6GR–45987–00	SPACER 1 ENTRETOISE 1	1	1				
22	6GR–45997–00	SPACER 2 ENTRETOISE 2	1	1				

FIG. 46 LOWER CASING & DRIVE 3 — BOITIER D'HELICE TRANSMISSION3

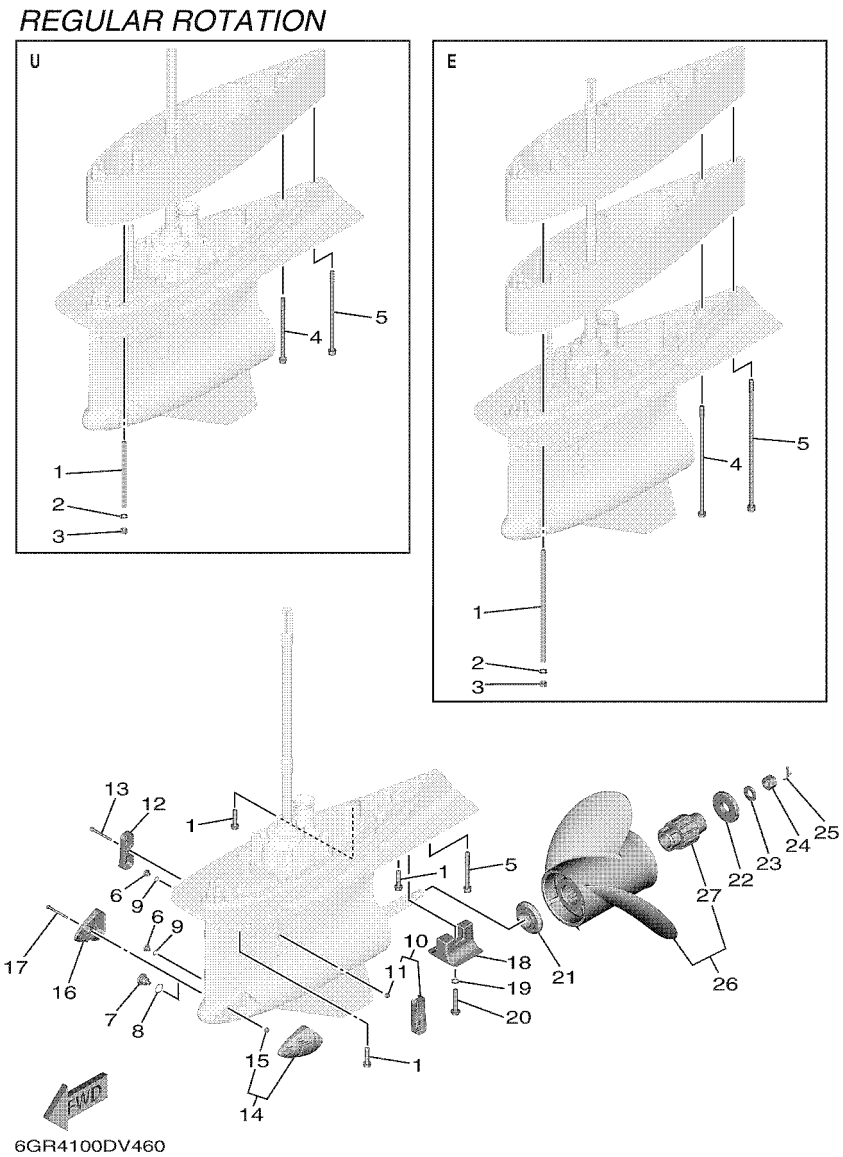

REF. NO.	PART NO. N° PIECES	DESCRIPTION DESCRIPTION	6KN3	6LB3				REMARKS REMARQUES
23	90201–19M01	WASHER, PLATE RONDELLE, PLATE	1	1				
24	90171–18M04	NUT, CASTLE ECROU, CRENELE	1	1				
25	91490–40030	PIN. COTTER GOUPILLE	1	1				
26	6GR–45970–10	PROPELLER (3X17-1/8"X15"-Y) HELICE (3X17-1/8"X15"-Y)	1	1				UR 3 BLADE UR 3 BLADE
	6GR–45972–10	PROPELLER (3X16-7/8"X17"-Y) HELICE (3X16-7/8"X17"-Y)	1	1				UR 3 BLADE UR 3 BLADE
	6GR–45974–10	PROPELLER (3X16-5/8"X19"-Y) HELICE (3X16-5/8"X19"-Y)	1	1				UR 3 BLADE UR 3 BLADE
	6GR–45976–10	PROPELLER (3X16-3/8"X21"-Y) HELICE (3X16-3/8"X21"-Y)	1	1				UR 3 BLADE UR 3 BLADE
	6GR–45978–10	PROPELLER (3X16-1/8"X23"-Y) HELICE (3X16-1/8"X23"-Y)	1	1				UR 3 BLADE UR 3 BLADE
	6GR–45930–10	PROPELLER (3X16"X25"-Y) HELICE (3X16"X25"-Y)	1	1				UR 3 BLADE UR 3 BLADE
	6GR–45938–10	PROPELLER (3X16-5/8"X18"-Y) HELICE (3X16-5/8"X18"-Y)	1	1				UR 3 BLADE UR 3 BLADE
	6GR–45936–10	PROPELLER (3X16-3/8"X20"-Y) HELICE (3X16-3/8"X20"-Y)	1	1				UR 3 BLADE UR 3 BLADE
	6GR–45934–10	PROPELLER (3X16-1/8"X22"-Y) HELICE (3X16-1/8"X22"-Y)	1	1				UR 3 BLADE UR 3 BLADE
	6GR–45932–10	PROPELLER (3X16"X24"-Y) HELICE (3X16"X24"-Y)	1	1				UR 3 BLADE UR 3 BLADE
	6GR–45D70–10	PROPELLER (3X16-7/8"X16"-Y) HELICE (3X16-7/8"X16"-Y)	1	1				UR 3 BLADE UR 3 BLADE
	6GR–45D72–10	PROPELLER (3X16"X26"-Y) HELICE (3X16"X26"-Y)	1	1				UR 3 BLADE UR 3 BLADE
	6GR–45D74–20	PROPELLER (3X16"X27"-Y2) HELICE (3X16"X27"-Y2)	1	1				UR 3 BLADE UR 3 BLADE
	6KN–45970–00	PROPELLER (3X16-7/8"X17"-Y) HELICE (3X16-7/8"X17"-Y)	1	1				UR 3 BLADE UR 3 BLADE
	6KN–45972–00	PROPELLER (3X16-1/8"X24"-Y) HELICE (3X16-1/8"X24"-Y)	1	1				UR 3 BLADE UR 3 BLADE
	6KN–45974–00	PROPELLER (3X16-1/8"X25"-Y) HELICE (3X16-1/8"X25"-Y)	1	1				UR 3 BLADE UR 3 BLADE
	6KN–45976–00	PROPELLER (3X16-5/8"X20"-Y) HELICE (3X16-5/8"X20"-Y)	1	1				UR 3 BLADE UR 3 BLADE
	6KN–45978–00	PROPELLER (3X16-3/8"X21"-Y) HELICE (3X16-3/8"X21"-Y)	1	1				UR 3 BLADE UR 3 BLADE
	6KN–45934–00	PROPELLER (3X16-3/8"X22"-Y) HELICE (3X16-3/8"X22"-Y)	1	1				UR 3 BLADE UR 3 BLADE
	6KN–45930–00	PROPELLER (3X16-1/8"X26"-Y) HELICE (3X16-1/8"X26"-Y)	1	1				UR 3 BLADE UR 3 BLADE
	6KN–45938–00	PROPELLER (3X16-7/8"X16"-Y) HELICE (3X16-7/8"X16"-Y)	1	1				UR 3 BLADE UR 3 BLADE
	6KN–45932–00	PROPELLER (3X16-1/8"X23"-Y) HELICE (3X16-1/8"X23"-Y)	1	1				UR 3 BLADE UR 3 BLADE
27	6GR–45C81–10	.DAMPER RUBBER, PROPELLER 1 .AMORTISSEUR HELICE 1	1	1				

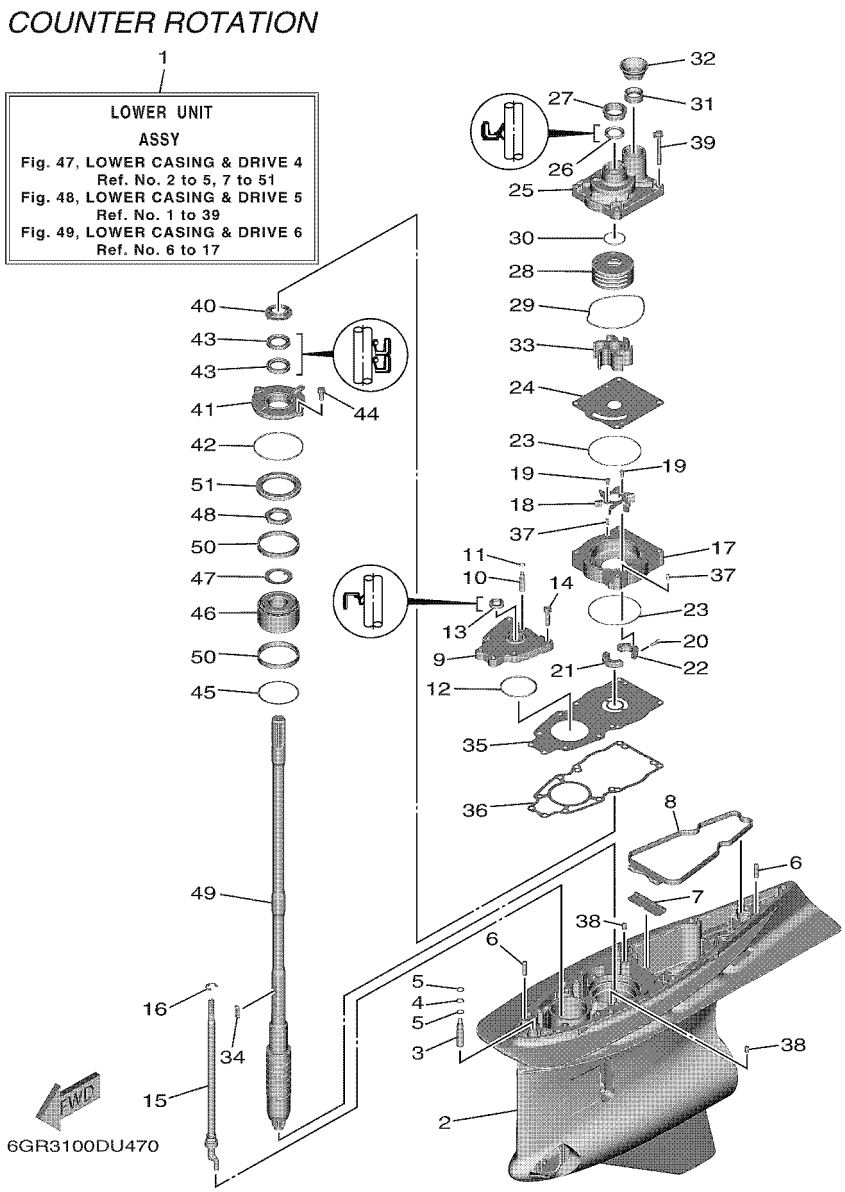

FIG. 47 LOWER CASING & DRIVE 4 — BOITIER D'HELICE TRANSMISSION4

REF. NO.	PART NO. N° PIECES	DESCRIPTION DESCRIPTION	6KN3	6LB3				REMARKS REMARQUES
1	6GS–45300–06–8D	LOWER UNIT ASSY UNITE INFERIEURE (ENS.)	1	1				UR GRAY, X(25.2") UR GRAY, X(25.2")
	6GS–45300–06–CE	LOWER UNIT ASSY UNITE INFERIEURE (ENS.)	1	1				UR WHITE, X(25.2") UR WHITE, X(25.2")
	6GS–45300–16–8D	LOWER UNIT ASSY UNITE INFERIEURE (ENS.)	1	1				UR GRAY, U(30.2") UR GRAY, U(30.2")
	6GS–45300–16–CE	LOWER UNIT ASSY UNITE INFERIEURE (ENS.)	1	1				UR WHITE, U(30.2") UR WHITE, U(30.2")
	6GS–45300–26–8D	LOWER UNIT ASSY UNITE INFERIEURE (ENS.)	1	1				UR GRAY, E(35.2") UR GRAY, E(35.2")
	6GS–45300–26–CE	LOWER UNIT ASSY UNITE INFERIEURE (ENS.)	1	1				UR WHITE, E(35.2") UR WHITE, E(35.2")
2	6GR–45311–02–8D	CASING, LOWER BOITIER D'HELICE	1	1				UR GRAY UR GRAY
	6GR–45311–02–CE	CASING, LOWER BOITIER D'HELICE	1	1				UR WHITE UR WHITE
3	6GR–45308–00	VALVE ASSY 1 CLAPET COMPLET 1	1	1				
4	93210–10010	O-RING JOINT TORIQUE	1	1				
5	6GR–43873–00	RING, BACK UP RESSORT	2	2				
6	99480–08030	PIN GOUPILLE	2	2				
7	6GR–45376–00	GUIDE, SEAL DAMPER BUTEE, JOINT CAOUTCHOUC	1	1				
8	6GR–45375–01	DAMPER, SEAL BOURRELET, CAOUTCHOUC	1	1				
9	6GR–45321–00	PLATE PLAQUETTE	1	1				
10	6GR–45309–00	VALVE ASSY 2 CLAPET COMPLET 2	1	1				
11	93210–07100	O-RING JOINT TORIQUE	1	1				
12	93210–64488	O-RING JOINT TORIQUE	1	1				
13	93106–14001	OIL SEAL JOINT SPY	1	1				
14	97E95–08535	BOLT, HEXAGON W/W DEEP RECESS VIS HEXAGONAL AVC RONDELLE	6	6				
15	6GS–44150–01	SHIFT CAM ASSY CAME D'INVERSION	1	1				UR X(25.2") UR X(25.2")
	6GS–44150–11	SHIFT CAM ASSY CAME D'INVERSION	1	1				UR U(30.2") UR U(30.2")
	6GS–44150–21	SHIFT CAM ASSY CAME D'INVERSION	1	1				UR E(35.2") UR E(35.2")
16	99002–12600	CIRCLIP CIRCLIP	1	1				
17	6GR–44341–00	HOUSING, WATER PUMP CORPS, POMPE A EAU	1	1				
18	6GR–12451–00	IMPELLER, WATER PUMP ROTOR, DE POMPE A EAU	1	1				
19	97095–05010	BOLT BOULON	2	2				

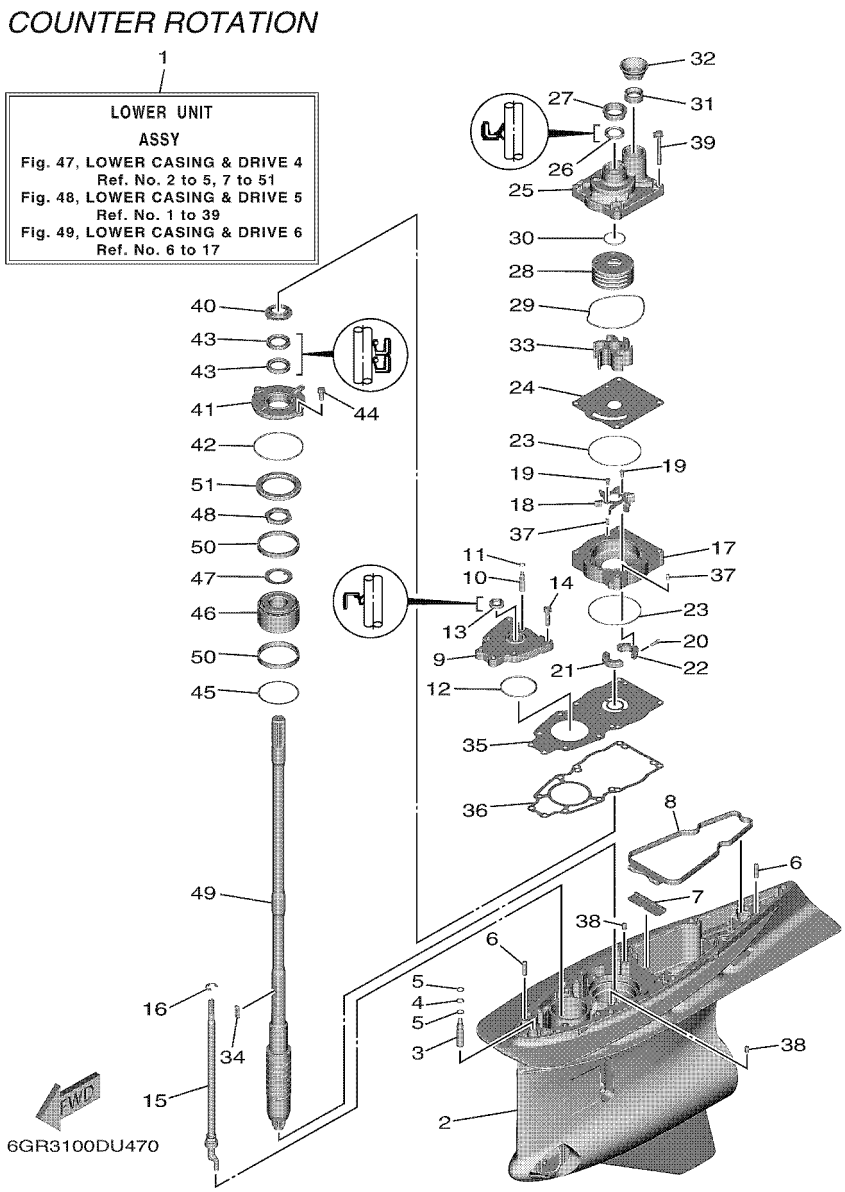

FIG. 47 LOWER CASING & DRIVE 4 — BOITIER D'HELICE TRANSMISSION4

REF. NO.	PART NO. N° PIECES	DESCRIPTION DESCRIPTION	6KN3	6LB3				REMARKS REMARQUES
20	91380–05016	BOLT BOULON	2	2				
21	6GR–44381–00	SPACER 1 ENTRETOISE 1	1	1				
22	6GR–44382–00	SPACER 2 ENTRETOISE 2	1	1				
23	93210–97690	O-RING JOINT TORIQUE	2	2				
24	6GR–44323–00	OUTER PLATE, CARTRIDGE PLAQUE EXTERIEURE	1	1				
25	6GR–44311–00	HOUSING, WATER PUMP CORPS, POMPE A EAU	1	1				
26	93109–26001	OIL SEAL JOINT SPY	1	1				
27	6GR–44312–00	COVER, WATER PUMP HOUSING COUVERCLE	1	1				
28	6GR–44322–00	INSERT, CARTRIDGE CUVETTE	1	1				
29	93211–08001	O-RING JOINT TORIQUE	1	1				
30	93210–37160	O-RING JOINT TORIQUE	1	1				
31	6GR–44365–01	DAMPER, WATER SEAL 1 JOINT, TUBE D'EAU 1	1	1				
32	6GR–44379–00	GUIDE, WATER TUBE GUIDE DE TUBE D'EAU	1	1				
33	6GR–44352–00	IMPELLER TURBINE	1	1				
34	6AW–44336–00	KEY CLAVETTE	1	1				
35	6GR–44328–00	PLATE PLAQUETTE	1	1				
36	6GR–44315–00	GASKET, WATER PUMP JOINT, POMPE A EAU	1	1				
37	93606–12019	PIN, DOWEL GOUPILLE	2	2				
38	93608–12M05	PIN, DOWEL AXE	2	2				
39	90119–08196	BOLT, WITH WASHER BOULON, AVEC RONDELLE	4	4				
40	6GR–45344–00	COVER, OIL SEAL FLASQE, JOINT D'HUILE	1	1				
41	6GR–45335–00	HOUSING, OIL SEAL LOGEMENT DE JOINT SPY	1	1				
42	93210–89535	O-RING JOINT TORIQUE	1	1				
43	93101–30037	OIL SEAL JOINT SPY	2	2				
44	97E95–08520	BOLT, HEXAGON W/W DEEP RECESS VIS HEXAGONAL AVC RONDELLE	2	2				
45	688–45567–01	SHIM (T:0.10MM) CALE (T:0.10MM)	1	1				UR UR
	688–45567–10	SHIM (T:0.12MM) CALE (T:0.12MM)	1	1				UR UR

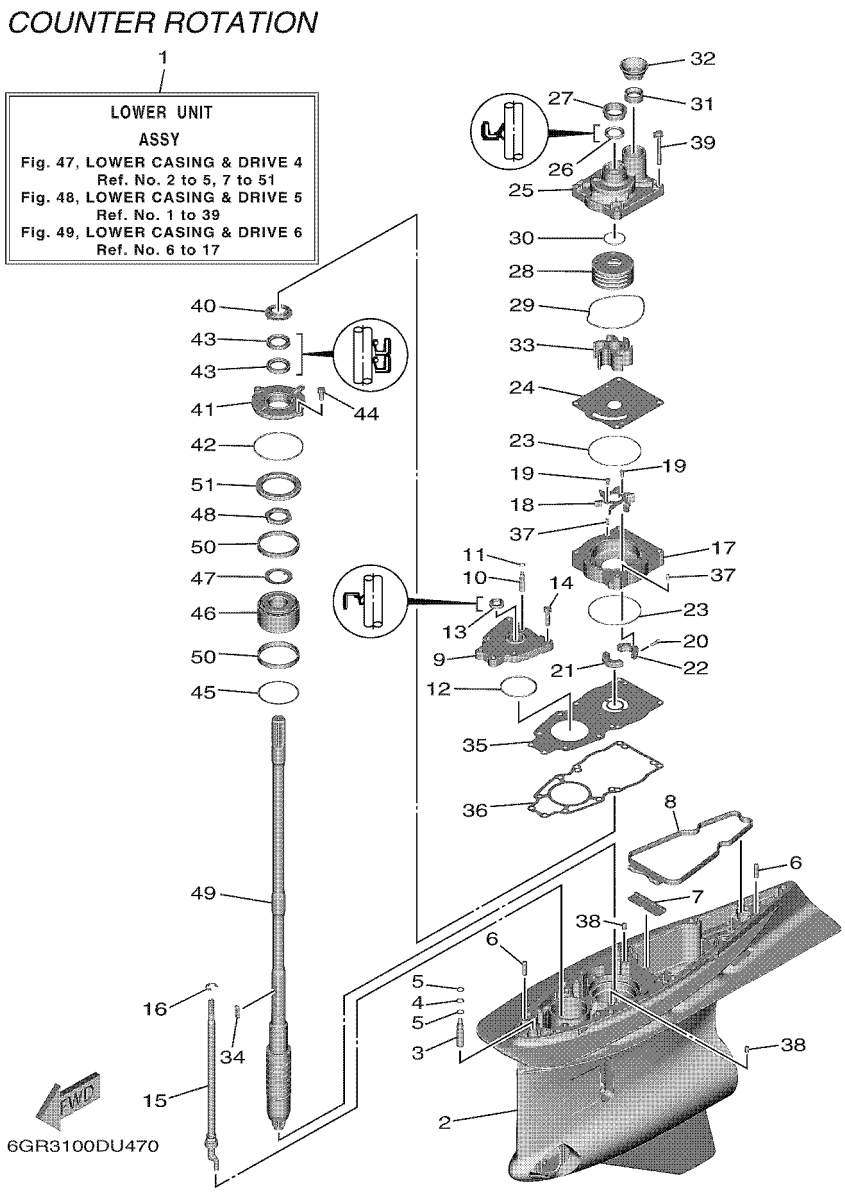

FIG. 47 LOWER CASING & DRIVE 4 — BOITIER D'HELICE TRANSMISSION4

REF. NO.	PART NO. N° PIECES	DESCRIPTION DESCRIPTION	6KN3	6LB3				REMARKS REMARQUES
45	688–45567–20	SHIM (T:0.15MM) CALE (T:0.15MM)	1	1				UR UR
	688–45567–30	SHIM (T:0.18MM) CALE (T:0.18MM)	1	1				UR UR
	688–45567–40	SHIM (T:0.30MM) CALE (T:0.30MM)	1	1				UR UR
	688–45567–50	SHIM (T:0.40MM) CALE (T:0.40MM)	1	1				UR UR
	688–45567–60	SHIM (T:0.50MM) CALE (T:0.50MM)	1	1				UR UR
46	93399–99967	BEARING ROULEMENT	1	1				
47	90214–35M07	WASHER, CLAW RONDELLE, A GRIFFES	1	1				
48	90170–35M34	NUT ECROU	1	1				
49	6GR–45501–00	DRIVE SHAFT COMP. ARBRE MOTEUR COMP.	1	1				UR X(25.2") UR X(25.2")
	6GR–45501–10	DRIVE SHAFT COMP. ARBRE MOTEUR COMP.	1	1				UR U(30.2") UR U(30.2")
	6GR–45501–20	DRIVE SHAFT COMP. ARBRE MOTEUR COMP.	1	1				UR E(35.2") UR E(35.2")
50	6GR–45539–00	SPACER 2 ENTRETOISE 2	2	2				
51	6GR–45244–00	NUT ECROU	1	1				

FIG. 48 LOWER CASING & DRIVE 5 — BOITIER D'HELICE TRANSMISSION5

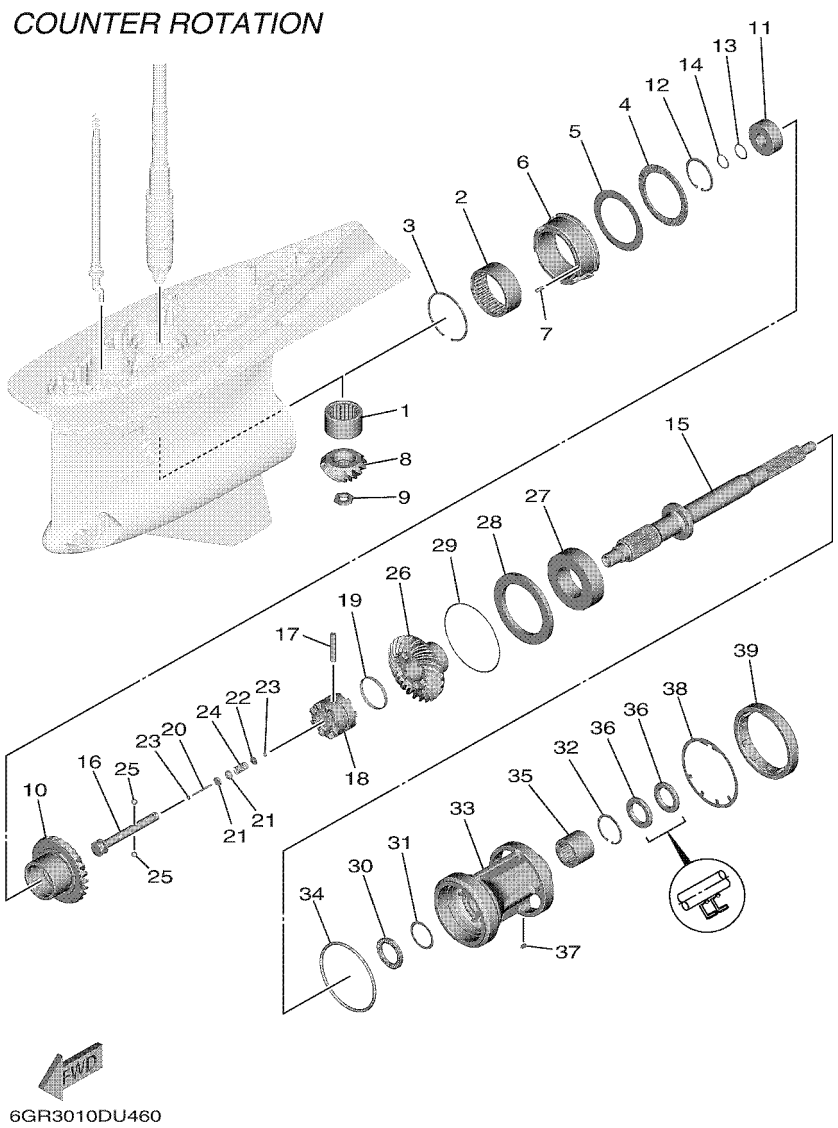

REF. NO.	PART NO. N° PIECES	DESCRIPTION DESCRIPTION	6KN3	6LB3				REMARKS REMARQUES
1	93311–944A0	BEARING ROULEMENT	1	1				
2	93311–675A1	BEARING ROULEMENT	1	1				
3	93450–92171	CIRCLIP CIRCLIP	1	1				
4	93340–69012	BEARING CERVEAUX DE DIRECTION	1	1				
5	6GR–45567–00	SHIM (T:2.00MM) CALE (T:2.00MM)	1	1				UR UR
	6GR–45567–10	SHIM (T:2.03MM) CALE (T:2.03MM)	1	1				UR UR
	6GR–45567–20	SHIM (T:2.06MM) CALE (T:2.06MM)	1	1				UR UR
	6GR–45567–30	SHIM (T:2.09MM) CALE (T:2.09MM)	1	1				UR UR
	6GR–45567–40	SHIM (T:2.12MM) CALE (T:2.12MM)	1	1				UR UR
	6GR–45567–50	SHIM (T:2.15MM) CALE (T:2.15MM)	1	1				UR UR
	6GR–45567–60	SHIM (T:2.18MM) CALE (T:2.18MM)	1	1				UR UR
	6GR–45567–70	SHIM (T:2.21MM) CALE (T:2.21MM)	1	1				UR UR
6	6GR–45824–00	ADAPTER ADAPTATEUR	1	1				
7	93606–16117	PIN, DOWEL GOUPILLE	1	1				
8	6GR–45551–00	PINION (14T) PIGNON D'ATTAQUE (14D)	1	1				
9	90170–18009	NUT ECROU	1	1				
10	6GS–45561–00	GEAR 1 (25T) PIGNON 1 (25T)	1	1				
11	93390–00033	BEARING ROULEMENT	1	1				
12	99009–62500	CIRCLIP CIRCLIP	1	1				
13	90201–253K0	WASHER, PLATE (T=1.0) RONDELLE, PLATE (T=1.0)	1	1				
14	93440–25020	CIRCLIP CIRCLIP	1	1				
15	6GS–45611–01	SHAFT, PROPELLER ARBRE, HELICE	1	1				
16	6GR–45634–00	SLIDE, SHIFT CONTRE-POUSSOIR	1	1				
17	6GR–45632–00	PIN, CROSS GOUPILLE DE CRABOT	1	1				
18	6GR–45631–00	CLUTCH, DOG CRABOT	1	1				
19	6GR–45633–00	RING, CROSS PIN JONC, GOUPILLE CRABOT	1	1				
20	6H1–45668–00	SHAFT, FREE 1 AXE 1	1	1				

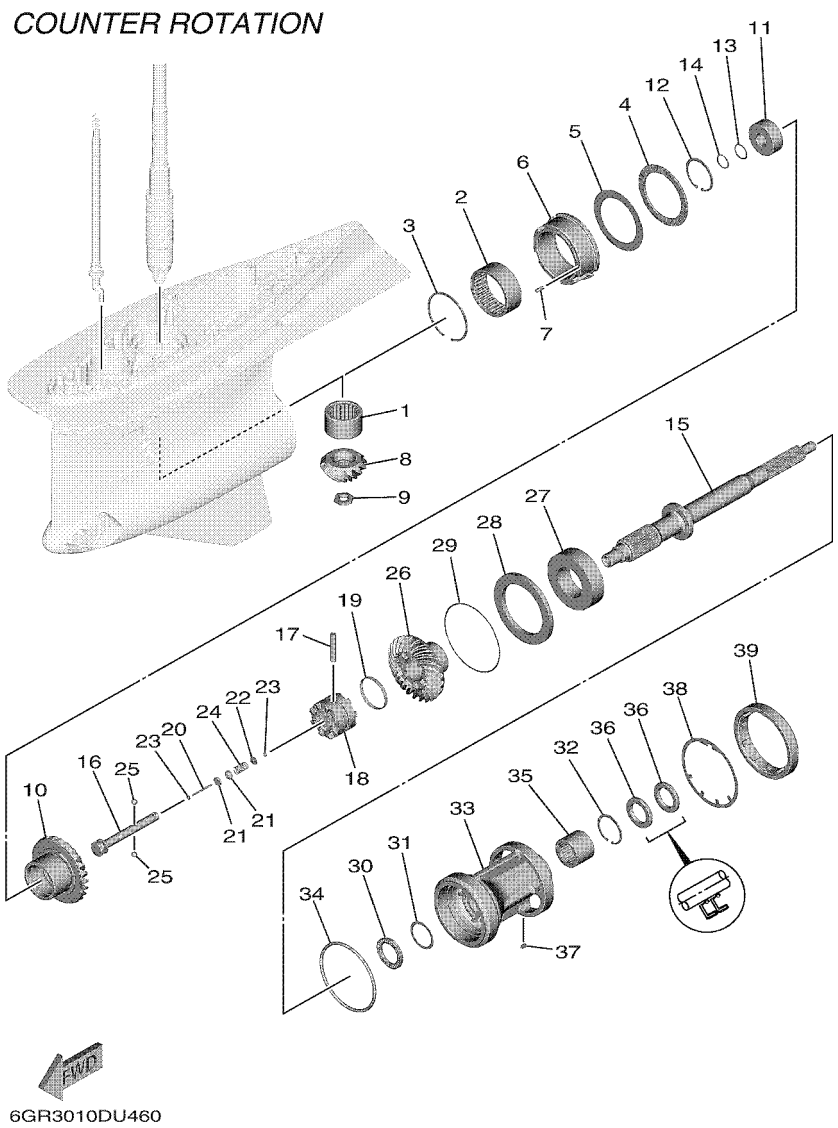

FIG. 48 LOWER CASING & DRIVE 5 — BOITIER D'HELICE TRANSMISSION5

REF. NO.	PART NO. N° PIECES	DESCRIPTION DESCRIPTION	6KN3	6LB3				REMARKS REMARQUES
21	61A–45635–00	PLUNGER, SHIFT POUSSOIR D'EMBRAYAGE	2	2				
22	90201–02M00	WASHER, PLATE RONDELLE, PLATE	1	1				
23	90183–02M03	NUT, SPRING ECROU, RESSORT	2	2				
24	90501–10M77	SPRING, COMPRESSION RESSORT, COMPRESSION	1	1				
25	93501–04011	BALL BILLE	2	2				
26	6GS–45571–00	GEAR 2 (25T) PIGNON 2 (25T)	1	1				
27	93332–000B2	BEARING ROULEMENT	1	1				
28	6GR–45576–00	WASHER, THRUST 2 RONDELLE DE CALAGE 2	1	1				
29	6GR–45577–00	SHIM (T:0.10MM) CALE (T:0.10MM)	1	1				UR UR
	6GR–45577–10	SHIM (T:0.12MM) CALE (T:0.12MM)	1	1				UR UR
	6GR–45577–20	SHIM (T:0.15MM) CALE (T:0.15MM)	1	1				UR UR
	6GR–45577–30	SHIM (T:0.18MM) CALE (T:0.18MM)	1	1				UR UR
	6GR–45577–40	SHIM (T:0.30MM) CALE (T:0.30MM)	1	1				UR UR
	6GR–45577–50	SHIM (T:0.40MM) CALE (T:0.40MM)	1	1				UR UR
	6GR–45577–60	SHIM (T:0.50MM) CALE (T:0.50MM)	1	1				UR UR
30	93341–440U5	BEARING CERVEAUX DE DIRECTION	1	1				
31	6K1–45578–01	SHIM (T:0.10MM) CALE (T:0.10MM)	1	1				UR UR
	6K1–45578–10	SHIM (T:0.12MM) CALE (T:0.12MM)	1	1				UR UR
	6K1–45578–20	SHIM (T:0.15MM) CALE (T:0.15MM)	1	1				UR UR
	6K1–45578–30	SHIM (T:0.18MM) CALE (T:0.18MM)	1	1				UR UR
	6K1–45578–40	SHIM (T:0.30MM) CALE (T:0.30MM)	1	1				UR UR
	6K1–45578–50	SHIM (T:0.40MM) CALE (T:0.40MM)	1	1				UR UR
	6K1–45578–60	SHIM (T:0.50MM) CALE (T:0.50MM)	1	1				UR UR
32	99009–55500	CIRCLIP CIRCLIP	1	1				
33	6GS–45332–00	HOUSING, BEARING FLASQUE, ROULEMENT	1	1				
34	93211–26001	O-RING JOINT TORIQUE	1	1				
35	93311–737A2	BEARING ROULEMENT	1	1				

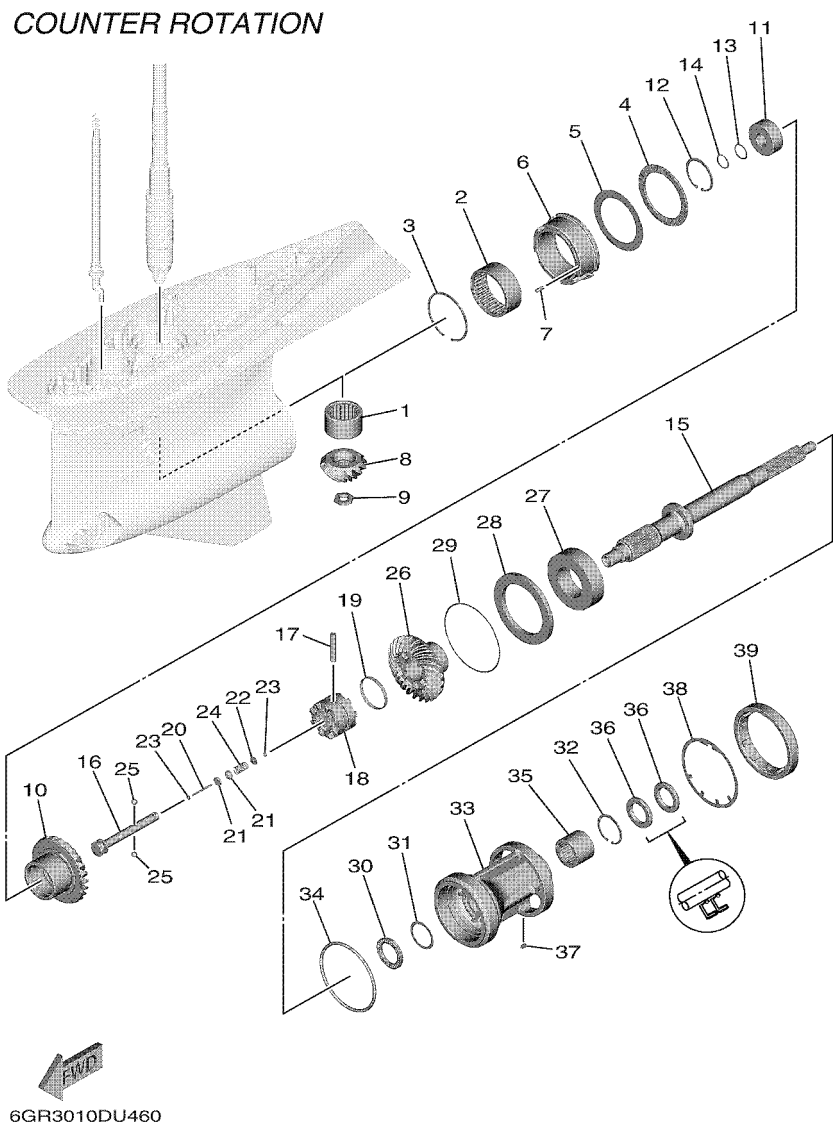

FIG. 48 LOWER CASING & DRIVE 5 — BOITIER D'HELICE TRANSMISSION5

REF. NO.	PART NO. N° PIECES	DESCRIPTION DESCRIPTION	6KN3	6LB3				REMARKS REMARQUES
36	93101–37001	OIL SEAL JOINT SPY	2	2				
37	90282–05008	KEY, STRAIGHT CLAVETTE, DROITE	1	1				
38	6GR–45383–00	WASHER, CLAW FREIN D'ECROU	1	1				
39	6GR–45384–00	NUT ECROU	1	1				

FIG. 49 LOWER CASING & DRIVE 6 — BOITIER D'HELICE TRANSMISSION6

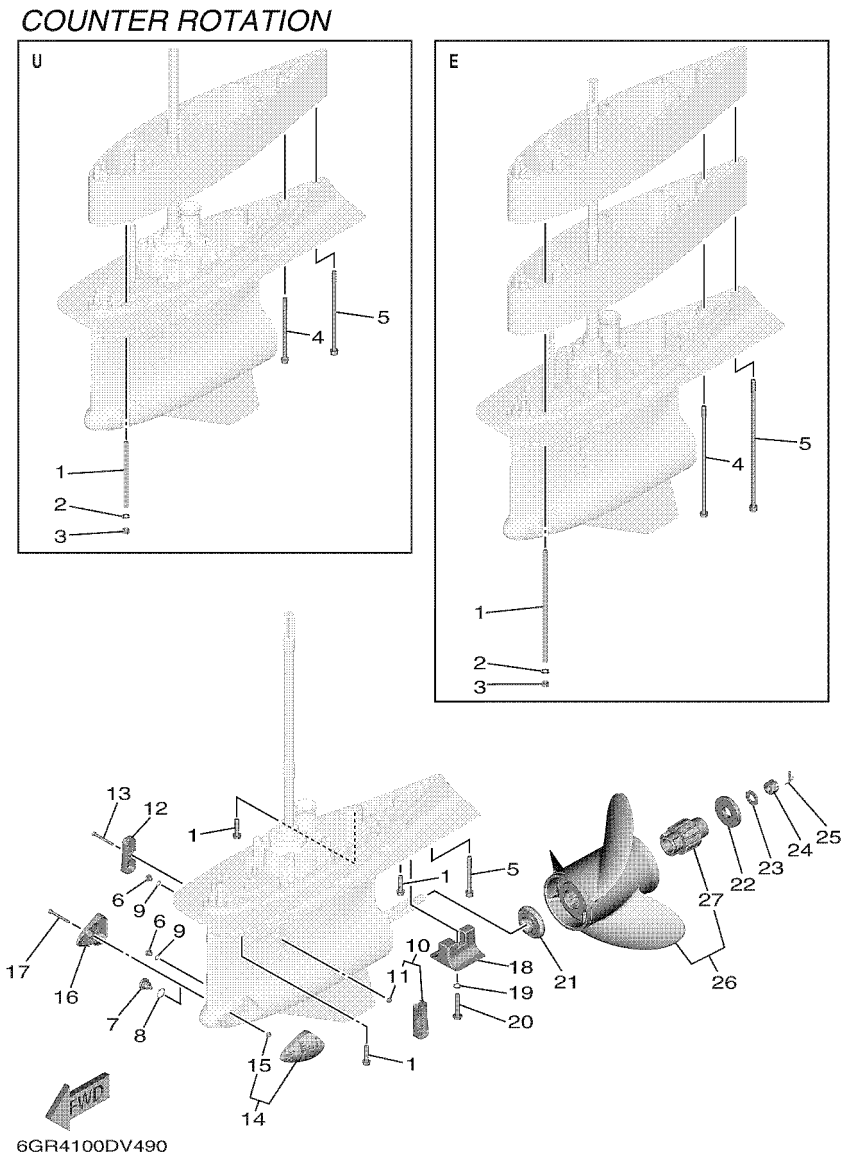

REF. NO.	PART NO. N° PIECES	DESCRIPTION DESCRIPTION	6KN3	6LB3				REMARKS REMARQUES
1	90119–10024	BOLT, WITH WASHER BOULON, AVEC RONDELLE	9	9				UR X(25.2") UR X(25.2")
	90116–10067	BOLT, STUD GOUJON	8	8				UR U(30.2") UR U(30.2")
	90116–10066	BOLT, STUD GOUJON	8	8				UR E(35.2") UR E(35.2")
2	92995–10600	WASHER RONDELLE	8	8				U(30.2"),E(35.2") U(30.2"),E(35.2")
3	95380–10600	NUT ECROU	8	8				U(30.2"),E(35.2") U(30.2"),E(35.2")
4	90119–10009	BOLT, WITH WASHER BOULON, AVEC RONDELLE	1	1				UR U(30.2") UR U(30.2")
	90119–10060	BOLT, WITH WASHER BOULON, AVEC RONDELLE	1	1				UR E(35.2") UR E(35.2")
5	90110–10053	BOLT, HEXAGON SOCKET HEAD BOULON, TETE HEXAGONALE CREUSE	1	1				UR X(25.2") UR X(25.2")
	90110–10054	BOLT, HEXAGON SOCKET HEAD BOULON, TETE HEXAGONALE CREUSE	1	1				UR U(30.2") UR U(30.2")
	90110–10055	BOLT, HEXAGON SOCKET HEAD BOULON, TETE HEXAGONALE CREUSE	1	1				UR E(35.2") UR E(35.2")
6	90340–08003	PLUG, STRAIGHT SCREW PLOT, FILETE DROIT	2	2				
7	6GR–45341–00	PLUG, DRAIN BOUCHON DE VIDANGE	1	1				
8	93210–19123	O-RING JOINT TORIQUE	1	1				
9	93210–09165	O-RING JOINT TORIQUE	2	2				
10	6GR–45214–01	COVER, WATER INLET 1 GRILLE, ENTREE D'EAU 1	1	1				
11	90185–06M07	.NUT, SELF-LOCKING .ECROU,AUTO-BLOQUANT	1	1				
12	6GR–45215–01	COVER, WATER INLET 2 GRILLE, ENTREE D'EAU 2	1	1				
13	90110–06425	BOLT, HEXAGON SOCKET HEAD BOULON, TETE HEXAGONALE CREUSE	1	1				
14	6KN–45224–00	COVER, WATER INLET 3 GRILLE, ENTREE D'EAU 3	1	1				
15	90185–06M07	.NUT, SELF-LOCKING .ECROU,AUTO-BLOQUANT	1	1				
16	6KN–45225–00	COVER, WATER INLET 4 GRILLE, ENTREE D'EAU 4	1	1				
17	90110–06425	BOLT, HEXAGON SOCKET HEAD BOULON, TETE HEXAGONALE CREUSE	1	1				
18	6AW–45373–00	ANODE ANODE	1	1				
19	92990–10300	WASHER RONDELLE, PLATE	1	1				
20	90105–10257	BOLT, FLANGE BOULON, A COLLERETTE	1	1				
21	6GR–45987–00	SPACER 1 ENTRETOISE 1	1	1				
22	6GR–45997–00	SPACER 2 ENTRETOISE 2	1	1				

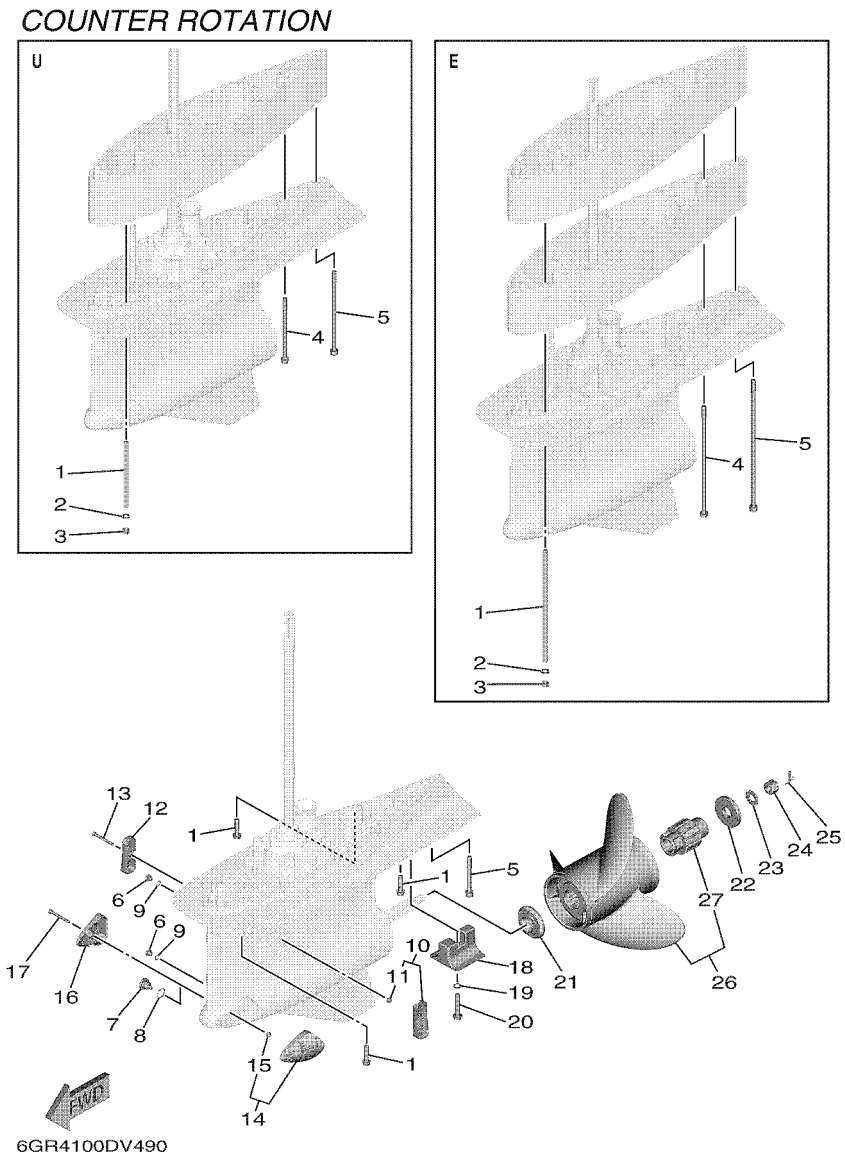

FIG. 49 LOWER CASING & DRIVE 6 — BOITIER D'HELICE TRANSMISSION6

REF. NO.	PART NO. N° PIECES	DESCRIPTION DESCRIPTION	6KN3	6LB3				REMARKS REMARQUES
23	90201–19M01	WASHER, PLATE RONDELLE, PLATE	1	1				
24	90171–18M04	NUT, CASTLE ECROU, CRENELE	1	1				
25	91490–40030	PIN. COTTER GOUPILLE	1	1				
26	6GS–45970–10	PROPELLER (3X17-1/8"X15"-YL) HELICE (3X17-1/8"X15"-YL)	1	1				UR 3 BLADE UR 3 BLADE
	6GS–45972–10	PROPELLER (3X16-7/8"X17"-YL) HELICE (3X16-7/8"X17"-YL)	1	1				UR 3 BLADE UR 3 BLADE
	6GS–45974–10	PROPELLER (3X16-5/8"X19"-YL) HELICE (3X16-5/8"X19"-YL)	1	1				UR 3 BLADE UR 3 BLADE
	6GS–45976–10	PROPELLER (3X16-3/8"X21"-YL) HELICE (3X16-3/8"X21"-YL)	1	1				UR 3 BLADE UR 3 BLADE
	6GS–45978–10	PROPELLER (3X16-1/8"X23"-YL) HELICE (3X16-1/8"X23"-YL)	1	1				UR 3 BLADE UR 3 BLADE
	6GS–45930–10	PROPELLER (3X16"X25"-YL) HELICE (3X16"X25"-YL)	1	1				UR 3 BLADE UR 3 BLADE
	6GS–45938–10	PROPELLER (3X16-5/8"X18"-YL) HELICE (3X16-5/8"X18"-YL)	1	1				UR 3 BLADE UR 3 BLADE
	6GS–45936–10	PROPELLER (3X16-3/8"X20"-YL) HELICE (3X16-3/8"X20"-YL)	1	1				UR 3 BLADE UR 3 BLADE
	6GS–45934–10	PROPELLER (3X16-1/8"X22"-YL) HELICE (3X16-1/8"X22"-YL)	1	1				UR 3 BLADE UR 3 BLADE
	6GS–45932–10	PROPELLER (3X16"X24"-YL) HELICE (3X16"X24"-YL)	1	1				UR 3 BLADE UR 3 BLADE
	6GS–45D70–10	PROPELLER (3X16-7/8"X16"-YL) HELICE (3X16-7/8"X16"-YL)	1	1				UR 3 BLADE UR 3 BLADE
	6GS–45D72–10	PROPELLER (3X16"X26"-YL) HELICE (3X16"X26"-YL)	1	1				UR 3 BLADE UR 3 BLADE
	6GS–45D74–20	PROPELLER (3X16"X27"-YL2) HELICE (3X16"X27"-YL2)	1	1				UR 3 BLADE UR 3 BLADE
	6KP–45970–00	PROPELLER (3X16-7/8"X17"-YL) HELICE (3X16-7/8"X17"-YL)	1	1				UR 3 BLADE UR 3 BLADE
	6KP–45972–00	PROPELLER (3X16-1/8"X24"-YL) HELICE (3X16-1/8"X24"-YL)	1	1				UR 3 BLADE UR 3 BLADE
	6KP–45974–00	PROPELLER (3X16-1/8"X25"-YL) HELICE (3X16-1/8"X25"-YL)	1	1				UR 3 BLADE UR 3 BLADE
	6KP–45976–00	PROPELLER (3X16-5/8"X20"-YL) HELICE (3X16-5/8"X20"-YL)	1	1				UR 3 BLADE UR 3 BLADE
	6KP–45978–00	PROPELLER (3X16-3/8"X21"-YL) HELICE (3X16-3/8"X21"-YL)	1	1				UR 3 BLADE UR 3 BLADE
	6KP–45934–00	PROPELLER (3X16-3/8"X22"-YL) HELICE (3X16-3/8"X22"-YL)	1	1				UR 3 BLADE UR 3 BLADE
	6KP–45930–00	PROPELLER (3X16-1/8"X26"-YL) HELICE (3X16-1/8"X26"-YL)	1	1				UR 3 BLADE UR 3 BLADE
	6KP–45938–00	PROPELLER (3X16-7/8"X16"-YL) HELICE (3X16-7/8"X16"-YL)	1	1				UR 3 BLADE UR 3 BLADE
	6KP–45932–00	PROPELLER (3X16-1/8"X23"-YL) HELICE (3X16-1/8"X23"-YL)	1	1				UR 3 BLADE UR 3 BLADE
27	6GR–45C81–10	.DAMPER RUBBER, PROPELLER 1 .AMORTISSEUR HELICE 1	1	1				

FIG. 50 OPTIONAL PARTS 1 — PIECES OPTIONNELLES 1

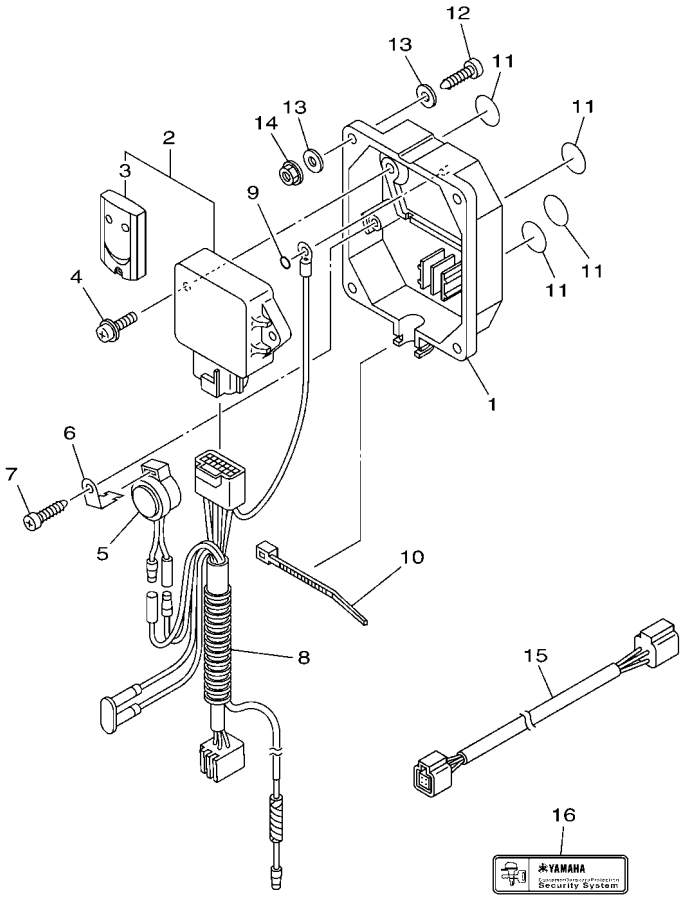

6CJ1100-K370

REF. NO.	PART NO. N° PIECES	DESCRIPTION DESCRIPTION	6KN3	6LB3				REMARKS REMARQUES
1	6Y8–86267–00	CASE COMPLETE 1 CARTER (ENS.) 1	1	1				
2	6Y8–86260–12	REMOTE CONTROL UNIT ASSY UNITE DE TELECOMMANDE (ENS.)	1	1				UR 315MHz UR 315MHz
	6Y8–86260–03	REMOTE CONTROL UNIT ASSY UNITE DE TELECOMMANDE (ENS.)	1	1				UR 433MHz UR 433MHz
3	6AA–86261–22	.XMTR. COMP. .XMTR. COMP.	2	2				UR FOR 315MHz UR FOR 315MHz
	6AA–86261–01	.XMTR. COMP. .XMTR. COMP.	2	2				UR FOR 433MHz UR FOR 433MHz
4	97980–06216	SCREW, WITH WASHER VIS, AVEC RONDELLE	2	2				
5	6X4–83383–00	BUZZER RONFLEUR	1	1				
6	6X4–83386–00	STAY, BUZZER SUPPOR, RONFLEUR	1	1				
7	97780–60620	SCREW, TAPPING VIS, TETE BOMBEE	1	1				
8	6Y8–82509–10	WIRE, SUB LEAD FIL, SECONDAIRE	1	1				
9	93210–04279	O-RING JOINT TORIQUE	1	1				
10	90465–11M10	CLAMP BRIDE	1	1				
11	6Y8–8454G–00	PATCH 1 TAMPON 1	4	4				
12	90167–06M00	SCREW, TAPPING VIS, TETE FRAISEE	4	4				UR UR
	97880–06035	SCREW, PAN HEAD VIS, TETE TRONCONIQUE	4	4				UR UR
13	90201–06M30	WASHER, PLATE RONDELLE, PLATE	8	8				
14	95780–06300	NUT, FLANGE ECROU	4	4				
15	6Y8–82521–11	2FT PIGTAIL BUS FAISCEAU (L: 2FT.)	1	1				
16	6Y8–48277–00	STICKER 1 ETIQUETTE 1	4	4				

FIG. 51 OPTIONAL PARTS 2 — PIECES OPTIONNELLES 2

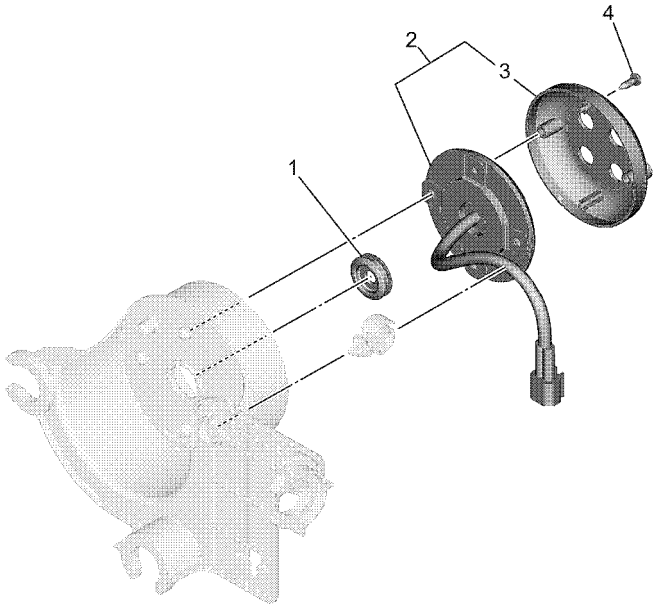

6KN210EDX450

REF. NO.	PART NO. N° PIECES	DESCRIPTION DESCRIPTION	6KN3	6LB3				REMARKS REMARQUES
1	90480–20006	GROMMET PASSE-FIL	1	1				
2	6KA–6810C–00	LED LIGHT ASSY ASSEMBLAGE DE LUMIERE LED	1	1				
3	6KA–84516–10	.COVER, TAILLIGHT .COUVERCLE, FEU ARRIERE	1	1				
4	97780–40125	SCREW, TAPPING VIS, TETE BOMBEE	2	2				

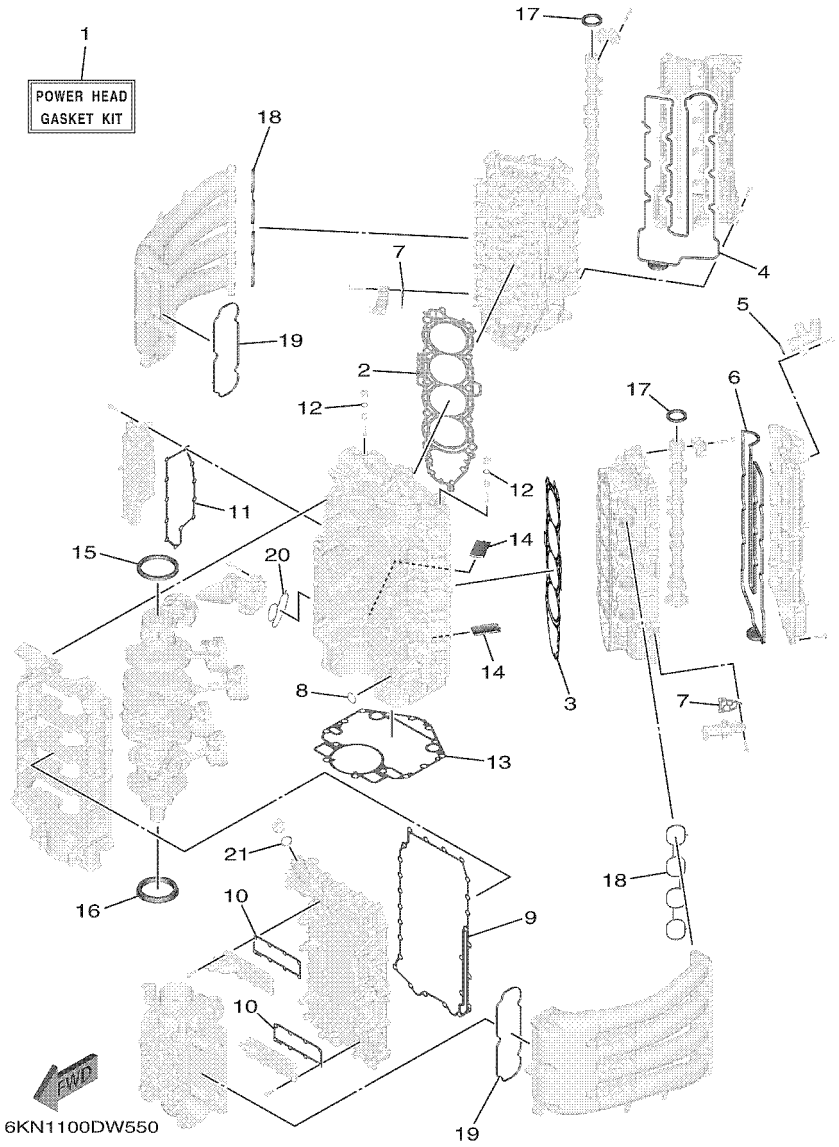

FIG. 52 REPAIR KIT 1 — KITS DE REPARATION 1

REF. NO.	PART NO. N° PIECES	DESCRIPTION DESCRIPTION	6KN3	6LB3				REMARKS REMARQUES
1	6KN–W0001–01	POWER HEAD GASKET KIT POCHETTE DE JINTS TETE MOTRICE	1	1				
2	6KN–11181–00	.GASKET, CYLINDER HEAD 1 .JOINT, DE CULASSE 1	1	1				
3	6KN–11182–00	.GASKET, CYLINDER HEAD 2 .JOINT, CULASSE 2	1	1				
4	6GR–11193–00	.GASKET, HEAD COVER 1 .JOINT, COUVERCLE DE CULASSE 1	1	1				
5	93210–28646	.O-RING .JOINT TORIQUE	1	1				
6	6GR–11194–00	.GASKET, HEAD COVER 2 .JOINT, COUVERCLE DE CULASSE 2	1	1				
7	6CB–1242F–00	.GASKET, FILTER .JOINT, FILTRE	2	2				
8	93210–26658	.O-RING .JOINT TORIQUE	1	1				
9	6GR–15451–01	.GASKET, CRANKCASE COVER 1 .JOINT, COUVERCLE DE CARTER 1	1	1				
10	6GR–1131B–00	.GASKET, COVER .JOINT, COUVERCLE	2	2				
11	6GR–15353–00	.GASKET, DRAIN .JOINT, PLOT DE VIDANGE	1	1				
12	93210–13M63	.O-RING .JOINT TORIQUE	2	2				
13	6GR–11351–01	.GASKET, CYLINDER .JOINT, D'EMBASE	1	1				
14	6GR–14664–01	.GROMMET, WATER SHUT .PASSE-FIL	2	2				
15	93102–90004	.OIL SEAL .JOINT SPY	1	1				
16	93102–85010	.OIL SEAL .JOINT SPY	1	1				
17	93102–38008	.OIL SEAL .JOINT SPY	2	2				
18	6GR–13645–00	.GASKET, MANIFOLD 1 .JOINT, TUBULURE 1	2	2				
19	6GR–13646–00	.GASKET, MANIFOLD 2 .JOINT, TUBULURE 2	2	2				
20	6GR–13477–00	.GASKET .JOINT	1	1				
21	93210–24M79	.O-RING .JOINT TORIQUE	1	1				

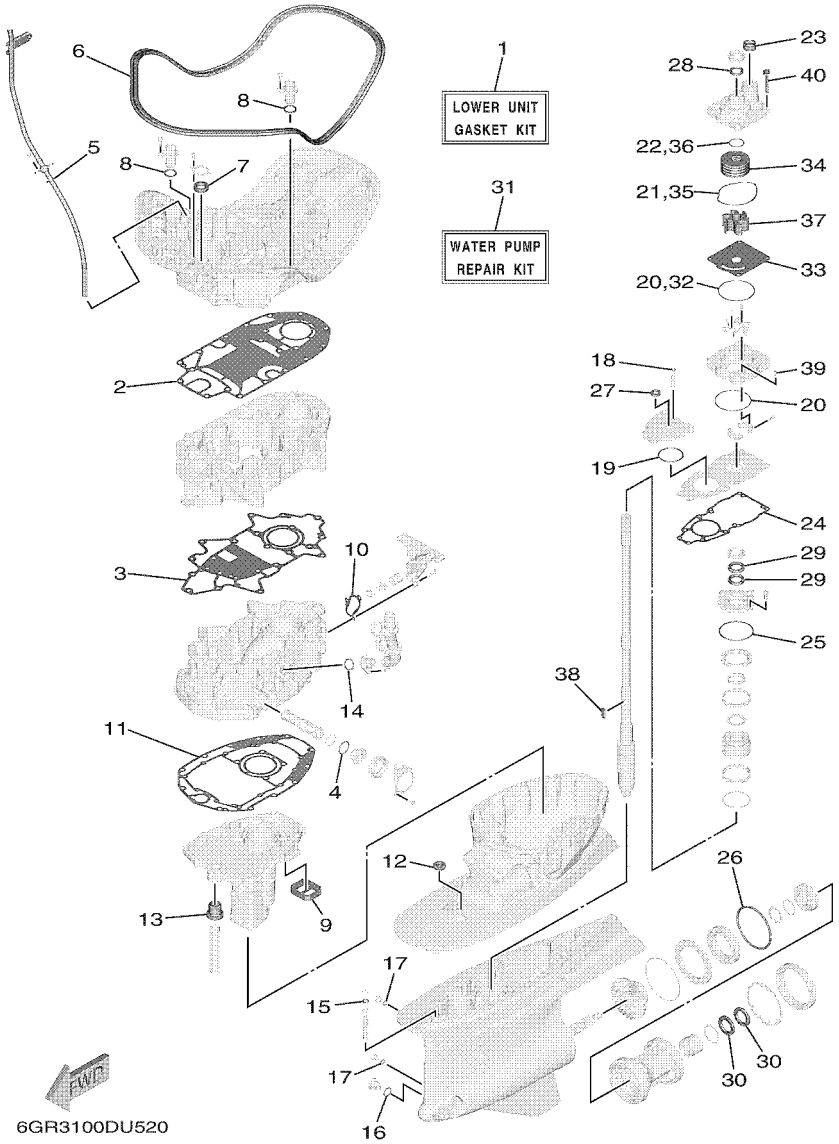

FIG. 53 REPAIR KIT 2 — KITS DE REPARATION 2

REF. NO.	PART NO. N° PIECES	DESCRIPTION DESCRIPTION	6KN3	6LB3				REMARKS REMARQUES
1	6GR–W0001–23	LOWER UNIT GASKET KIT POCHETTE DE JOINTS EMBASE	1	1				
2	6GR–15312–01	.GASKET, OIL PAN .JOINT DE VENTILATEUR D'HUILE	1	1				
3	6GR–1531C–01	.GASKET, OIL PAN 2 .JOINT DE VENTILATEUR D'HUILE 2	1	1				
4	93210–34633	.O-RING .JOINT TORIQUE	1	1				
5	93210–19MJ3	.O-RING .JOINT TORIQUE	1	1				
6	6GR–42716–00	.RUBBER SEAL 1 .JOINT EN CAOUTCHOUC 1	1	1				
7	93102–26004	.OIL SEAL .JOINT SPY	1	1				
8	6GR–44366–01	.DAMPER, WATER SEAL 2 .JOINT, TUBE D'EAU 2	2	2				
9	6GR–45127–00	.SEAL .JOINT	1	1				
10	6EK–12435–A0	.GASKET .JOINT	1	1				
11	6GR–45113–00	.GASKET, UPPER CASING .JOINT, TUBE D'ARBRE	1	1				
12	6GR–44521–00	.SEAL .JOINT	1	1				
13	6GR–44367–01	.DAMPER, WATER SEAL 3 .JOINT TUBE D'EAU 3	1	1				
14	6GR–44366–01	.DAMPER, WATER SEAL 2 .JOINT, TUBE D'EAU 2	2	2				
15	93210–10010	.O-RING .JOINT TORIQUE	1	1				
16	93210–19123	.O-RING .JOINT TORIQUE	1	1				
17	93210–09165	.O-RING .JOINT TORIQUE	2	2				
18	93210–07100	.O-RING .JOINT TORIQUE	1	1				
19	93210–64488	.O-RING .JOINT TORIQUE	1	1				
20	93210–97690	.O-RING .JOINT TORIQUE	2	2				
21	93211–08001	.O-RING .JOINT TORIQUE	1	1				
22	93210–37160	.O-RING .JOINT TORIQUE	1	1				
23	6GR–44365–01	.DAMPER, WATER SEAL 1 .JOINT, TUBE D'EAU 1	1	1				
24	6GR–44315–00	.GASKET, WATER PUMP .JOINT, POMPE A EAU	1	1				
25	93210–89535	.O-RING .JOINT TORIQUE	1	1				
26	93211–26001	.O-RING .JOINT TORIQUE	1	1				
27	93106–14001	.OIL SEAL .JOINT SPY	1	1				

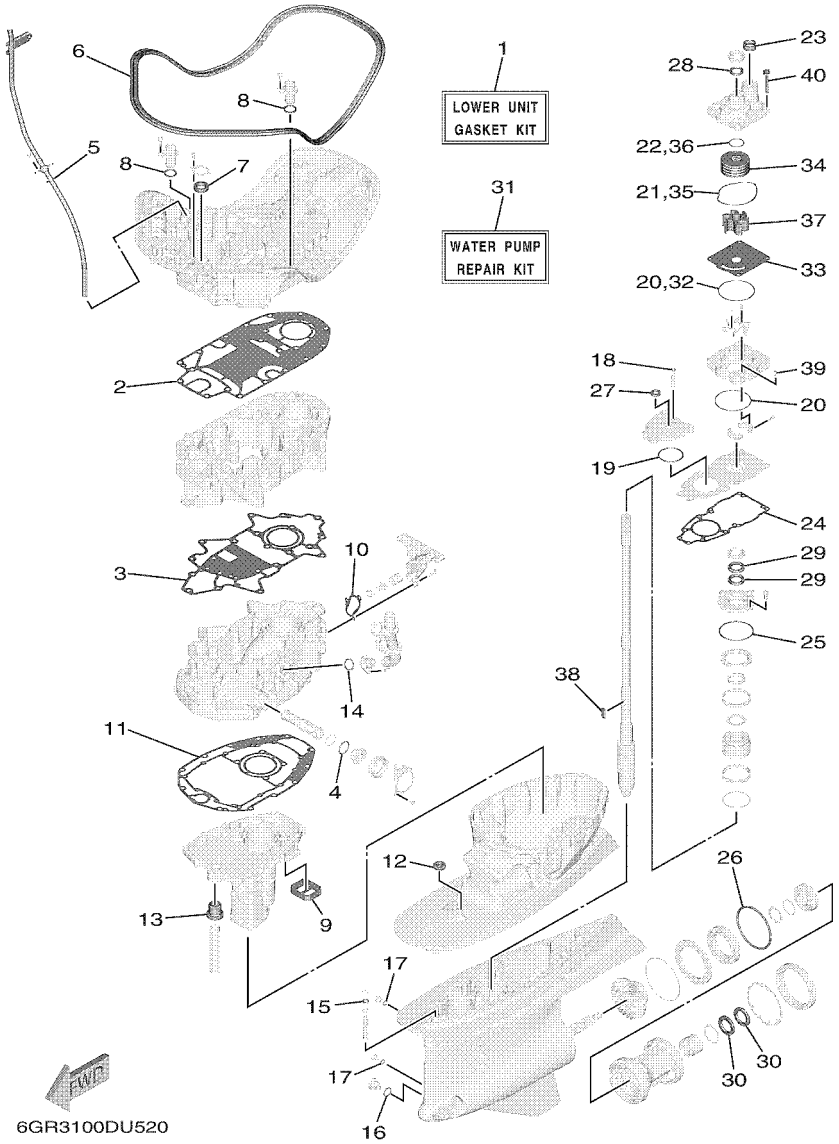

FIG. 53 REPAIR KIT 2 — KITS DE REPARATION 2

REF. NO.	PART NO. N° PIECES	DESCRIPTION DESCRIPTION	6KN3	6LB3				REMARKS REMARQUES
28	93109–26001	.OIL SEAL .JOINT SPY	1	1				
29	93101–30037	.OIL SEAL .JOINT SPY	2	2				
30	93101–37001	.OIL SEAL .JOINT SPY	2	2				
31	6GR–W0078–01	WATER PUMP REPAIR KIT KIT DE REPARATION DE LA POMPE	1	1				
32	93210–97690	.O-RING .JOINT TORIQUE	1	1				
33	6GR–44323–00	.OUTER PLATE, CARTRIDGE .PLAQUE EXTERIEURE	1	1				
34	6GR–44322–00	.INSERT, CARTRIDGE .CUVETTE	1	1				
35	93211–08001	.O-RING .JOINT TORIQUE	1	1				
36	93210–37160	.O-RING .JOINT TORIQUE	1	1				
37	6GR–44352–00	.IMPELLER .TURBINE	1	1				
38	6AW–44336–00	.KEY .CLAVETTE	1	1				
39	93606–12019	.PIN, DOWEL .GOUPILLE	2	2				
40	90119–08196	.BOLT, WITH WASHER .BOULON, AVEC RONDELLE	4	4				

PART NO. N° PIECES	REF. NO.
6KN–11000–00	3 – 1
6KN–11110–00	5 – 2
6KN–11120–00	5 – 12
6DA–11133–10	5 – 3
	5 – 13
6GR–11135–00	6 – 2
6GR–11136–00	6 – 10
6KN–11181–00	5 – 27
	52 – 2
6KN–11182–00	5 – 28
	52 – 3
6GR–11186–01	22 – 23
6GR–11187–01	22 – 29
6GR–11191–00–9S	6 – 1
6GR–11192–00–9S	6 – 6
6GR–11193–00	6 – 4
	52 – 4
6GR–11194–00	6 – 12
	52 – 6
6G8–11197–A0	3 – 38
	13 – 6
	14 – 3
6ML–11301–00	5 – 21
6KN–11313–00	29 – 15
6GR–1131B–00	3 – 20
	52 – 10
6G8–11325–00	1 – 6
	1 – 10
	1 – 11
	3 – 37
	13 – 8
	14 – 5
6ML–11325–00	1 – 1
	5 – 22
67F–11328–01	5 – 23
6AW–1132P–00	1 – 4
	3 – 31
6GR–11351–01	3 – 43
	52 – 13
6GR–1135A–00	3 – 41
6GR–11372–00	6 – 7
6GR–11411–01	4 – 1
6GR–11416–00	4 – 11
6GR–11416–10	4 – 11
6GR–11416–20	4 – 11
6GR–11416–30	4 – 11
6GR–11417–00	4 – 12
6GR–11417–10	4 – 12

PART NO. N° PIECES	REF. NO.
6GR–11417–20	4 – 12
6GR–11417–30	4 – 12
6GR–11426–00	4 – 15
6CB–11426–03	4 – 13
6GR–11427–00	4 – 16
6CB–11427–03	4 – 14
6GR–11567–00	9 – 6
6P2–11590–03	9 – 16
6GR–115A0–00	9 – 5
6GR–11603–00	4 – 20
6KN–11631–00	4 – 19
6GR–11633–00	4 – 21
6GR–11634–00	4 – 22
63P–11654–10	4 – 18
6GR–11656–00	4 – 23
6GR–11656–10	4 – 23
6GR–11656–20	4 – 23
6GR–11927–00	6 – 19
6GR–12111–00	8 – 1
6CB–12113–00	8 – 4
51Y–12119–00	8 – 7
6KN–12121–00	8 – 2
6GR–12145–00	8 – 8
6GR–12145–10	8 – 8
6GR–12145–20	8 – 8
6GR–12145–30	8 – 8
6GR–12145–40	8 – 8
6GR–12145–50	8 – 8
6GR–12145–60	8 – 8
6GR–12153–00	8 – 8
6GR–12153–10	8 – 8
6GR–12153–20	8 – 8
6GR–12153–30	8 – 8
6GR–12153–40	8 – 8
6GR–12153–50	8 – 8
6GR–12153–60	8 – 8
6GR–12153–70	8 – 8
6GR–12153–80	8 – 8
6GR–12153–90	8 – 8
6GR–12153–A0	8 – 8
6GR–12153–B0	8 – 8
6GR–12153–C0	8 – 8
6GR–12153–D0	8 – 8
6GR–12153–E0	8 – 8
6GR–12153–F0	8 – 8
6GR–12153–G0	8 – 8
6GR–12153–H0	8 – 8
6GR–12153–J0	8 – 8

PART NO. N° PIECES	REF. NO.
6GR–12153–K0	8 – 8
6GR–12153–L0	8 – 8
6GR–12153–M0	8 – 8
6GR–12153–N0	8 – 8
6GR–12153–P0	8 – 8
6GR–12153–R0	8 – 8
6GR–12153–S0	8 – 8
6GR–12153–T0	8 – 8
6KN–12171–00	9 – 1
6KN–12172–00	9 – 3
6KN–12181–00	9 – 2
6KN–12182–00	9 – 4
6GR–12199–00	4 – 8
6GR–12210–00	9 – 12
6GR–12230–00	9 – 13
6GR–12411–00	1 – 5
	3 – 33
66M–12411–01	1 – 3
	3 – 25
6H3–12411–20	1 – 2
	3 – 17
688–12412–00	3 – 26
6GR–12412–00	3 – 34
6H3–12412–10	3 – 18
6GR–12413–00	3 – 35
6G5–12416–00	43 – 22
6KN–12417–00–9S	3 – 22
6GR–1241B–00–9S	3 – 29
6CB–1242F–00	6 – 15
	52 – 7
6EK–12435–A0	43 – 27
	53 – 10
6GR–12439–00	18 – 18
6GR–1243A–00	7 – 8
6GR–1243E–00	7 – 9
6GR–1243F–00	43 – 28
6GR–1244H–00	7 – 13
6GR–12451–00	44 – 18
	47 – 18
6GR–1246A–00	43 – 21
6KN–12481–00	14 – 19
6GR–12491–00	42 – 12
6KN–12535–00	20 – 15
6KN–12551–00	7 – 6
6KN–12576–00	7 – 1
6KN–12577–00	29 – 19
6KN–12578–00	29 – 20
6KN–12579–00	7 – 2

PART NO. N° PIECES	REF. NO.
6GR–1257A–01	43 – 29
6GR–12581–00	43 – 30
6R3–12581–00	29 – 16
6KN–12582–00	29 – 17
6R3–12583–00	29 – 18
6GR–12584–00	40 – 19
6KN–12588–00	7 – 16
6KN–12589–00	7 – 17
6GR–12594–00	7 – 12
6GR–12645–00	9 – 8
6GR–12651–00	20 – 9
6GR–12653–01	20 – 12
6GR–12659–00	20 – 14
6GR–13016–00	18 – 7
6GR–13160–09	18 – 25
6GR–13188–00	4 – 4
6GR–13300–01	12 – 1
6GR–13411–00	1 – 8
	43 – 15
6GR–13437–61	20 – 27
N26–13440–03	1 – 9
	12 – 3
6GR–13446–00	12 – 5
67F–13448–00	2 – 18
6GR–13473–00	12 – 11
6GR–13477–00	12 – 6
	52 – 20
6GR–13490–00	12 – 10
6GR–13556–00	11 – 4
68V–13577–01	15 – 18
6CB–13593–00	15 – 15
6GR–13593–00	15 – 9
6GR–13641–00	10 – 7
63P–13643–00	11 – 9
6GR–13645–00	10 – 8
	52 – 18
6GR–13646–00	10 – 9
	52 – 19
6GR–13711–00	11 – 3
6GR–13716–00	15 – 16
6KN–13750–00	11 – 1
6GR–13751–00	11 – 2
6GR–13761–00	18 – 26
6GR–13781–00	15 – 5
6KN–13898–00	11 – 5
6GR–13910–00	18 – 17
6GR–13938–00	15 – 8
6GR–14197–00	15 – 17

PART NO. N° PIECES	REF. NO.
6GR–14295–00	18 – 22
6GR–14296–00	18 – 23
6AW–1441J–01	10 – 3
6KN–14440–00	10 – 1
6FM–14562–00	15 – 14
6GR–14567–00	15 – 19
6KN–14613–00	13 – 3
6KN–14615–00–9S	13 – 1
6KN–14623–00	13 – 4
6KN–14625–00–9S	13 – 2
6KN–14635–00–9S	14 – 1
6KN–14643–00	13 – 5
6KN–14645–00–9S	14 – 2
6KN–14656–00–9S	14 – 9
6GR–14664–01	3 – 44
	52 – 14
6GR–14711–01	41 – 1
6GR–14753–00	40 – 26
6KN–15109–00–9S	3 – 2
6P2–15187–00	3 – 7
6GR–15311–01	43 – 8
6GR–15312–01	43 – 1
	53 – 2
6GR–15316–01	43 – 20
6GR–1531A–00	10 – 12
6KN–1531A–10	10 – 13
6GR–1531B–01	43 – 2
6GR–1531C–01	43 – 3
	53 – 3
6GR–15351–00	43 – 12
6GR–15353–00	3 – 27
	52 – 11
6GR–15362–00	43 – 16
6G8–15363–00	12 – 8
6GR–15377–00	43 – 17
6KN–15411–01–9S	3 – 11
6GR–15413–00–9S	3 – 24
6GR–15414–01–9S	3 – 16
6GR–15423–00–9S	3 – 19
6GR–15451–01	3 – 13
	52 – 9
6KN–2153A–00	2 – 25
6KN–2153B–00	2 – 26
6GR–21841–00	15 – 13
6GR–22472–00	38 – 28
6GR–23113–00	39 – 48
6GR–2318F–00	42 – 8
6GR–2318K–00	26 – 9

PART NO. N° PIECES	REF. NO.
6GR–24113–00	15 – 22
6GR–2415H–00	15 – 23
6GR–24196–00	15 – 10
6GR–2419A–00	15 – 11
6GR–24217–00	17 – 11
6GR–24218–00	15 – 4
6GR–24220–03	15 – 1
6GR–24223–00	15 – 2
6GR–24224–01	15 – 3
6GR–24251–00	18 – 5
6AW–24300–01	17 – 8
	18 – 8
	18 – 13
6P2–24300–01	16 – 38
6AW–24300–11	15 – 21
	17 – 7
	18 – 11
6GR–24311–00	16 – 3
6GR–24312–01	16 – 16
6GR–24313–00	17 – 1
6GR–24314–00	17 – 2
6GR–24315–00	17 – 3
6GR–24316–00	17 – 4
6GR–24317–10	17 – 5
6GR–24321–01	16 – 19
6GR–24322–00	16 – 34
6GR–24323–00	16 – 37
6GR–24324–00	16 – 40
6GR–24325–01	16 – 44
6E5–24351–51	16 – 4
6AW–24360–02	19 – 1
6GR–24376–00	7 – 5
6AW–24377–01	16 – 2
688–24378–00	14 – 18
6E5–24378–00	16 – 17
6GR–24378–10	29 – 23
6E5–24379–00	42 – 9
6GR–243A1–00	18 – 1
6KN–243A1–00	18 – 4
6GR–243A2–00	18 – 2
6KN–243A2–00	18 – 12
6GR–243A3–00	18 – 3
6GR–24408–01	17 – 10
6R5–24408–10	16 – 35
6GR–24410–02	16 – 22
6GR–2441R–00	15 – 6
6GR–24420–10	15 – 20
6GR–24425–00	16 – 20

PART NO. N° PIECES	REF. NO.
6GR–24426–00	16 – 27
6GR–24430–00	15 – 12
6GR–24452–00	29 – 27
6GR–24460–01	17 – 12
6GR–24460–20	16 – 41
6CB–24461–00	17 – 9
	18 – 9
6KN–24461–00	18 – 14
6GR–24462–01	16 – 24
6GR–24491–00	16 – 26
6DA–24492–01	16 – 23
6GR–244A1–00	15 – 7
6GR–24501–00	18 – 6
6GR–24560–01	16 – 5
6GR–24561–00	16 – 6
6P3–24563–02	1 – 12
	16 – 8
6P3–24564–00	1 – 13
	16 – 7
6GR–24566–00	16 – 11
6GR–24568–01	16 – 9
6GR–24595–01	18 – 19
6GR–24596–01	16 – 48
6GR–24599–01	18 – 27
6GR–2464E–01	17 – 17
6GR–24864–00	36 – 9
6KN–24864–00	36 – 10
6KN–25415–00	38 – 36
6KN–26393–00	29 – 22
6GR–28100–11	33 – 5
6CB–2812A–00	24 – 9
6KN–28199–72–D0	33 – 6
6KN–28199–72–E0	33 – 6
6KN–28199–72–F0	33 – 6
6KN–28199–72–G0	33 – 6
6KN–28199–72–H0	33 – 6
6KN–28199–72–S0	33 – 6
6KN–28199–82–K0	33 – 7
6KN–28199–82–L0	33 – 7
6KN–28199–82–M0	33 – 7
6KN–28199–82–N0	33 – 7
6KN–28199–82–P0	33 – 7
6KN–28199–82–R0	33 – 7
6GR–41134–00	14 – 13
6GR–41137–00	40 – 1
6KN–41273–00	27 – 7
6GR–41297–00	40 – 5
6GR–42134–00	36 – 30

PART NO. N° PIECES	REF. NO.
6GR–42195–00	34 – 12
6BG–42384–00	40 – 9
6DA–42384–00	40 – 15
6GR–42384–00	40 – 12
6GR–42401–23	36 – 26
6GR–42477–00	2 – 3
6GR–42510–01–8D	37 – 1
6KN–42532–00	27 – 8
6GR–42541–00	7 – 3
6KN–42610–00–8D	2 – 1
6KN–42610–00–CE	2 – 1
6GR–42615–00	30 – 10
6KN–42617–00	29 – 10
	29 – 13
6KN–4261A–00–8D	2 – 2
6KN–4261A–00–CE	2 – 2
6GR–42622–01	30 – 4
6GR–42623–01	30 – 8
6KN–42625–00–8D	30 – 20
6KN–42625–00–CE	30 – 20
6KN–42629–00	2 – 20
6GR–42643–00	2 – 8
6GR–42647–00	2 – 5
6GR–42648–00	2 – 6
6GR–42649–00	2 – 7
663–42662–01	2 – 17
6AW–42663–01	2 – 9
6KN–42675–00	2 – 21
6KN–42676–00	2 – 23
6GR–42677–00	2 – 27
6GR–42678–00	33 – 3
6KN–4267A–00	33 – 2
6LB–4267A–00	33 – 2
6GR–42682–00	33 – 4
6DA–42697–00	36 – 5
6KN–42697–00	33 – 1
6LB–42697–00	2 – 19
6KN–42711–00–8D	29 – 1
6KN–42711–00–CE	29 – 1
6KN–42712–00–8D	30 – 1
6KN–42712–00–CE	30 – 1
6KN–42713–00–8D	30 – 5
6KN–42713–00–CE	30 – 5
6GR–42716–00	40 – 30
	53 – 6
61A–42717–00	35 – 11
6KN–42717–00	29 – 8
6DA–42717–01	40 – 14

PART NO. N° PIECES	REF. NO.
6KN–42718–00	29 – 11
6AW–42724–01	40 – 7
6GR–42724–01	40 – 11
6GR–42725–02	29 – 5
676–42726–00	27 – 6
6KN–42726–00	29 – 9
6H1–42726–22	40 – 8
6KN–42727–00	29 – 12
6GR–42740–00–8D	32 – 1
6GR–42740–00–CE	32 – 1
6GR–42743–00	6 – 20
6GR–42744–00	30 – 2
	30 – 6
60V–42747–10	40 – 17
6GR–42748–01	30 – 21
6H4–42748–01	29 – 14
6GR–42753–00	29 – 32
6GR–42758–00	30 – 14
	30 – 23
6GR–42761–00	29 – 6
6GR–42768–01	30 – 19
6KN–42769–00	30 – 11
6GR–42770–00–8D	32 – 5
6GR–42770–00–CE	32 – 5
6GR–42774–00–CA	32 – 3
69J–42774–10	30 – 18
	32 – 9
6GR–42775–00–CA	32 – 7
6AW–42785–00	42 – 4
6EE–42794–40	29 – 36
6EE–42794–50	29 – 37
6GR–42815–00–8D	31 – 1
6GR–42815–00–CE	31 – 1
6GR–42816–01–8D	31 – 2
6GR–42816–01–CE	31 – 2
6GR–42817–01–8D	31 – 3
6GR–42817–01–CE	31 – 3
6GR–42818–00	31 – 14
6GR–42819–00	31 – 15
6GR–42828–00	31 – 4
6GR–42829–00	31 – 5
6GR–42833–00	31 – 10
68T–42835–00	31 – 9
6GR–42835–00	31 – 7
6GR–4311A–00–8D	35 – 1
6GR–4311A–00–CE	35 – 1
6GR–4311B–00–8D	35 – 5
6GR–4311B–00–CE	35 – 5

PART NO. N° PIECES	REF. NO.
6GR–43121–00	36 – 37
6GR–43126–00	36 – 24
6GR–43144–00	35 – 17
6G5–43148–00	35 – 22
6GR–43181–00	35 – 19
6GR–43185–00	35 – 20
6GR–43311–02–8D	35 – 15
6GR–43311–02–CE	35 – 15
6GR–43318–00–8D	36 – 7
6GR–43318–00–CE	36 – 7
6GR–43333–00	35 – 12
6GR–43341–00	36 – 1
6GR–43342–00	36 – 2
6GR–43376–01	35 – 28
6GR–43378–10	36 – 44
6GR–43654–00	38 – 17
6KN–43800–00	38 – 1
6GR–43801–00	38 – 4
6GR–43804–00	39 – 3
6GR–43805–00	39 – 2
6GR–4380F–00	39 – 6
6C5–4380G–00	39 – 44
6GR–4380K–00	38 – 21
6KN–4380L–00	38 – 42
6GR–43810–00	38 – 3
6GR–43811–00	38 – 9
6GR–43812–00	38 – 5
63P–43812–20	38 – 34
6GR–43814–00	38 – 20
6C5–43816–00	39 – 43
69J–43817–00	38 – 44
6C6–43817–00	39 – 41
6GR–43818–00	38 – 27
6GR–4381E–00	35 – 7
6GR–4381F–00	35 – 8
6GR–4381J–00	36 – 20
6GR–43820–00	38 – 37
61A–43821–02	38 – 35
6GR–43827–00	38 – 18
6GR–43828–00	38 – 47
6EK–43829–00	38 – 50
6GR–4382A–00	36 – 22
6GR–4382E–00	38 – 11
6D8–4382L–00	39 – 34
6GR–43830–00	39 – 13
69J–43831–00	39 – 46
6GR–43835–00	38 – 22
6GR–4383E–01	26 – 5

PART NO. N° PIECES	REF. NO.
6GR–4383K–00	42 – 3
6GR–43840–00	38 – 2
6CJ–43841–00	39 – 15
6D8–43843–00	39 – 29
6D8–43844–00	39 – 28
6H1–43844–10	39 – 32
6GR–43845–00	38 – 30
69A–4384F–00	39 – 18
6H1–4384G–11	39 – 31
69J–4384H–00	38 – 10
61A–4384H–10	38 – 40
6CJ–4384M–00	39 – 17
6GR–43851–00	39 – 24
6C6–43853–00	39 – 21
6C5–43854–00	39 – 36
6C5–43855–10	39 – 26
6GR–43856–00	39 – 33
61A–43861–00	38 – 32
6GR–43861–00	38 – 26
6GR–43862–00	38 – 24
6D8–43863–00	38 – 33
6GR–43863–00	38 – 8
61A–43864–00	38 – 39
6GR–43864–01	39 – 12
6GR–4386K–00	39 – 7
6GR–43871–00	38 – 14
6GR–43872–00	38 – 7
6GR–43873–00	44 – 5
	47 – 5
61A–43874–00	38 – 38
61A–43875–10	38 – 41
61A–43876–01	38 – 31
67C–43879–10	39 – 9
6C6–4387G–00	39 – 20
6KN–43880–00	39 – 1
6KN–43881–00	39 – 10
6GR–43882–01	39 – 11
6H1–43883–00	39 – 16
69J–43888–00	38 – 48
69J–4388F–00	38 – 45
6GR–4388F–00	38 – 25
6GR–4388H–00	38 – 43
6GR–43892–00	39 – 4
6GR–43895–00	39 – 35
69J–4389J–00	39 – 23
	39 – 42
6GR–438A0–02	36 – 32
6GR–44117–00	34 – 6

PART NO. N° PIECES	REF. NO.
6GR–44120–01	34 – 20
6GR–44121–00	34 – 17
6CE–44122–00	34 – 11
6GR–44150–01	44 – 15
6GS–44150–01	47 – 15
6GR–44150–11	44 – 15
6GS–44150–11	47 – 15
6GR–44150–21	44 – 15
6GS–44150–21	47 – 15
6GR–44194–01	37 – 22
6GR–44311–00	44 – 25
	47 – 25
6GR–44312–00	44 – 27
	47 – 27
6GR–44315–00	44 – 36
	47 – 36
	53 – 24
6GR–44322–00	44 – 28
	47 – 28
	53 – 34
6GR–44323–00	44 – 24
	47 – 24
	53 – 33
6GR–44328–00	44 – 35
	47 – 35
6GR–44331–00	36 – 27
6GR–44332–00	36 – 28
6AW–44336–00	44 – 34
	47 – 34
	53 – 38
6GR–44341–00	44 – 17
	47 – 17
6GR–44352–00	44 – 33
	47 – 33
	53 – 37
6GR–44365–01	44 – 31
	47 – 31
	53 – 23
6GR–44366–01	40 – 20
	43 – 32
	53 – 8
	53 – 14
6GR–44367–01	41 – 12
	53 – 13
6GR–44379–00	44 – 32
	47 – 32
6GR–44381–00	44 – 21
	47 – 21

PART NO. N° PIECES	REF. NO.
6GR–44382–00	44 – 22
	47 – 22
6GR–44391–00	40 – 16
6GR–44511–00–CA	37 – 25
6GR–44514–00	37 – 19
6GR–44515–00	37 – 20
6GR–44521–00	41 – 11
	53 – 12
6KN–44522–00	30 – 12
6G5–44526–00	35 – 3
6GR–44533–00	37 – 24
6GR–44551–00–CA	37 – 6
6AW–44552–00–CA	37 – 17
6GR–44554–00	29 – 30
6AW–44555–00	37 – 9
6GR–44575–01	37 – 8
6GR–45111–00–8D	41 – 6
6GR–45111–00–CE	41 – 6
6GR–45113–00	41 – 7
	53 – 11
6GR–45127–00	41 – 5
	53 – 9
6GR–45135–00	40 – 28
6GR–45141–00–8D	32 – 13
6GR–45141–00–CE	32 – 13
6GR–45152–00	43 – 34
6GR–45159–01	42 – 14
6GR–45211–00–8D	41 – 14
	41 – 14
6GR–45211–00–CE	41 – 14
	41 – 14
6GR–45214–01	46 – 10
	49 – 10
6GR–45215–01	46 – 12
	49 – 12
6KN–45224–00	46 – 14
	49 – 14
6KN–45225–00	46 – 16
	49 – 16
6GR–45244–00	44 – 51
	47 – 51
6AW–45251–00	1 – 14
	35 – 2
6GR–45300–06–8D	44 – 1
6GS–45300–06–8D	47 – 1
6GR–45300–06–CE	44 – 1
6GS–45300–06–CE	47 – 1
6GR–45300–16–8D	44 – 1

PART NO. N° PIECES	REF. NO.
6GS–45300–16–8D	47 – 1
6GR–45300–16–CE	44 – 1
6GS–45300–16–CE	47 – 1
6GR–45300–26–8D	44 – 1
6GS–45300–26–8D	47 – 1
6GR–45300–26–CE	44 – 1
6GS–45300–26–CE	47 – 1
6GR–45308–00	44 – 3
	47 – 3
6GR–45309–00	44 – 10
	47 – 10
6GR–45311–02–8D	44 – 2
	47 – 2
6GR–45311–02–CE	44 – 2
	47 – 2
6GR–45318–00	41 – 10
6GR–45321–00	44 – 9
	47 – 9
6GR–45332–00	45 – 33
6GS–45332–00	48 – 33
6GR–45335–00	44 – 41
	47 – 41
6GR–45341–00	46 – 7
	49 – 7
6GR–45344–00	44 – 40
	47 – 40
6GR–45368–00	42 – 1
6GR–45369–00	42 – 6
6AW–45373–00	1 – 17
	46 – 18
	49 – 18
6GR–45375–01	41 – 19
	41 – 19
	44 – 8
	47 – 8
6GR–45376–00	44 – 7
	47 – 7
6GR–45383–00	45 – 38
	48 – 38
6GR–45384–00	45 – 39
	48 – 39
6GR–45393–00	26 – 2
	26 – 7
6GR–45394–01	26 – 1
6GR–45395–00	26 – 6
6GR–45398–00	41 – 15
	41 – 15
6GR–45399–00	41 – 17

PART NO. N° PIECES	REF. NO.
6GR–45399–00	41 – 17
6GR–45501–00	44 – 49
	47 – 49
6GR–45501–10	44 – 49
	47 – 49
6GR–45501–20	44 – 49
	47 – 49
6GR–45539–00	44 – 50
	47 – 50
6GR–45551–00	45 – 8
	48 – 8
6GR–45561–00	45 – 10
6GS–45561–00	48 – 10
6GR–45567–00	45 – 5
	48 – 5
688–45567–01	44 – 45
	47 – 45
688–45567–10	44 – 45
	47 – 45
6GR–45567–10	45 – 5
	48 – 5
688–45567–20	44 – 45
	47 – 45
6GR–45567–20	45 – 5
	48 – 5
688–45567–30	44 – 45
	47 – 45
6GR–45567–30	45 – 5
	48 – 5
688–45567–40	44 – 45
	47 – 45
6GR–45567–40	45 – 5
	48 – 5
688–45567–50	44 – 45
	47 – 45
6GR–45567–50	45 – 5
	48 – 5
688–45567–60	44 – 45
	47 – 45
6GR–45567–60	45 – 5
	48 – 5
6GR–45567–70	45 – 5
	48 – 5
6GR–45571–00	45 – 25
6GS–45571–00	48 – 26
6GR–45576–00	45 – 27
	48 – 28
6GR–45577–00	45 – 28

PART NO. N° PIECES	REF. NO.
6GR–45577–00	48 – 29
6GR–45577–10	45 – 28
	48 – 29
6GR–45577–20	45 – 28
	48 – 29
6GR–45577–30	45 – 28
	48 – 29
6GR–45577–40	45 – 28
	48 – 29
6GR–45577–50	45 – 28
	48 – 29
6GR–45577–60	45 – 28
	48 – 29
6GR–45578–00	45 – 31
6K1–45578–01	48 – 31
6GR–45578–10	45 – 31
6K1–45578–10	48 – 31
6GR–45578–20	45 – 31
6K1–45578–20	48 – 31
6GR–45578–30	45 – 31
6K1–45578–30	48 – 31
6GR–45578–40	45 – 31
6K1–45578–40	48 – 31
6GR–45578–50	45 – 31
6K1–45578–50	48 – 31
6GR–45578–60	45 – 31
6K1–45578–60	48 – 31
6GR–45578–70	45 – 31
6GR–45611–00	45 – 14
6GS–45611–01	48 – 15
6GR–45631–00	45 – 17
	48 – 18
6GR–45632–00	45 – 16
	48 – 17
6GR–45633–00	45 – 18
	48 – 19
6GR–45634–00	45 – 15
	48 – 16
61A–45635–00	45 – 20
	48 – 21
6H1–45668–00	45 – 19
	48 – 20
6GR–45824–00	45 – 6
	48 – 6
6KN–45930–00	46 – 26
6KP–45930–00	49 – 26
6GR–45930–10	46 – 26
6GS–45930–10	49 – 26

PART NO. N° PIECES	REF. NO.
6KN–45932–00	46 – 26
6KP–45932–00	49 – 26
6GR–45932–10	46 – 26
6GS–45932–10	49 – 26
6KN–45934–00	46 – 26
6KP–45934–00	49 – 26
6GR–45934–10	46 – 26
6GS–45934–10	49 – 26
6GR–45936–10	46 – 26
6GS–45936–10	49 – 26
6KN–45938–00	46 – 26
6KP–45938–00	49 – 26
6GR–45938–10	46 – 26
6GS–45938–10	49 – 26
6KN–45970–00	46 – 26
6KP–45970–00	49 – 26
6GR–45970–10	46 – 26
6GS–45970–10	49 – 26
6KN–45972–00	46 – 26
6KP–45972–00	49 – 26
6GR–45972–10	46 – 26
6GS–45972–10	49 – 26
6KN–45974–00	46 – 26
6KP–45974–00	49 – 26
6GR–45974–10	46 – 26
6GS–45974–10	49 – 26
6KN–45976–00	46 – 26
6KP–45976–00	49 – 26
6GR–45976–10	46 – 26
6GS–45976–10	49 – 26
6KN–45978–00	46 – 26
6KP–45978–00	49 – 26
6GR–45978–10	46 – 26
6GS–45978–10	49 – 26
6GR–45987–00	46 – 21
	49 – 21
6GR–45997–00	46 – 22
	49 – 22
6GR–45C81–10	46 – 27
	49 – 27
6GR–45D70–10	46 – 26
6GS–45D70–10	49 – 26
6GR–45D72–10	46 – 26
6GS–45D72–10	49 – 26
6GR–45D74–20	46 – 26
6GS–45D74–20	49 – 26
6GR–47445–00	36 – 38
6GR–47716–00	36 – 35

PART NO. N° PIECES	REF. NO.
6GR–4820A–01	34 – 1
6Y8–48277–00	50 – 16
6GR–48538–00	36 – 33
6GR–48539–00	36 – 41
6KN–53184–00	2 – 22
6KN–53185–00	2 – 24
6KA–6810C–00	51 – 2
6GR–68303–00	34 – 25
6GR–762W0–01	23 – 13
68V–81147–00	11 – 8
6GR–8132G–00	21 – 16
6GR–81410–00	20 – 3
6GR–81443–00	26 – 10
6GR–81639–01	20 – 22
6GR–81662–00	26 – 3
6GR–81673–00	4 – 5
6AW–81800–01	28 – 1
6AW–81807–01	28 – 3
6AW–81808–00	28 – 8
6AW–81810–00	28 – 16
6AW–81820–00	28 – 18
6AW–81826–00	28 – 19
6AW–81830–00	28 – 2
6AW–81832–00	28 – 7
6AW–81836–00	28 – 4
6AW–81839–00	28 – 14
6AW–8183R–01	28 – 11
6AW–8183T–00	28 – 6
6AW–81840–00	28 – 17
6AW–81842–00	28 – 15
6GR–81845–00	26 – 13
6AW–81846–00	28 – 20
6AW–81850–00	28 – 13
6AW–81854–00	28 – 12
6AW–81857–00	28 – 9
6AW–81862–00	28 – 10
6AW–81891–01	28 – 5
6GR–818D2–00	21 – 17
6GR–81916–00	23 – 4
6GR–81919–01	24 – 12
6GR–81919–11	24 – 13
6GR–81919–20	24 – 14
6P2–81923–00	23 – 15
6GR–81925–00	23 – 3
6GR–81929–00–9S	23 – 7
6AW–81941–00	28 – 21
6GR–81942–01	20 – 17
6GR–81948–02	21 – 7

PART NO. N° PIECES	REF. NO.
6GR–81949–01	23 – 14
68V–81950–00	21 – 24
6GR–81960–00	21 – 13
6GR–81960–10	21 – 13
6GR–81975–00	21 – 14
6EE–81994–40	20 – 28
6EE–81994–50	20 – 29
6AH–81996–00	29 – 38
6GR–82105–02	23 – 17
6P2–82113–00	24 – 10
6T4–82117–00	37 – 27
6GR–82117–01	23 – 10
6AW–82119–00	23 – 18
6GR–82119–00	24 – 17
	25 – 3
	25 – 10
6GR–82119–10	23 – 11
	25 – 11
6AW–82119–11	23 – 12
6AW–82119–20	23 – 19
6GR–82131–01	26 – 15
6GR–82147–00	35 – 9
6GR–82149–00	37 – 13
6CB–82151–00	24 – 4
6GR–82151–00	24 – 3
6CB–82151–10	24 – 5
6GR–82151–10	24 – 2
6CB–82151–20	24 – 6
6CB–82151–30	24 – 7
6KN–82171–00	24 – 24
6GR–82181–00	39 – 5
6GR–82310–03	22 – 1
6GR–82316–00	6 – 17
6A0–82317–01	20 – 20
	20 – 25
	22 – 25
	22 – 31
6GR–82386–00	22 – 9
6GR–82386–10	22 – 11
6DA–82388–00	21 – 20
6GR–82388–01	22 – 12
6GR–82389–00	22 – 15
6GR–82398–00	40 – 31
6GR–82421–00	17 – 16
6Y8–82509–10	50 – 8
6Y8–82521–11	50 – 15
6KN–82535–00	29 – 21
6GR–82553–00	36 – 17

PART NO. N° PIECES	REF. NO.
6GR–82563–00	29 – 34
6KN–8257G–00	10 – 18
68V–82582–10	25 – 4
6KN–82588–00	14 – 24
6GR–82589–00	24 – 18
6KN–82590–01	25 – 1
6LB–82590–01	25 – 1
6GR–82599–00	26 – 8
6GR–8259M–00	25 – 9
6GR–825A8–00	17 – 15
6GR–8272F–01	22 – 3
6GR–8272G–01	22 – 6
6GR–8272U–00	24 – 26
68F–82846–00	24 – 11
6X4–83383–00	50 – 5
6KA–83383–01	21 – 32
6X4–83386–00	50 – 6
6GR–83558–00	29 – 26
4P9–83591–00	21 – 26
6GR–83614–00	21 – 29
6AW–83651–01	12 – 12
6GR–8366B–00	14 – 28
68F–83688–10	11 – 7
6KA–84516–10	51 – 3
6Y8–8454G–00	50 – 11
6KN–85112–00	27 – 1
68F–85119–00	21 – 10
	24 – 21
	27 – 3
68F–85516–01	24 – 19
	27 – 2
6GR–85525–00	24 – 29
6GR–85544–00	24 – 8
689–85547–01	16 – 1
68V–85548–01	21 – 23
6GR–85561–01	20 – 4
60V–85564–00	21 – 8
6CE–85564–00	34 – 4
6GR–85586–01	20 – 7
6CJ–85780–01	3 – 46
6GR–85790–00	21 – 27
6GR–85887–00	36 – 14
6GR–85895–00	21 – 1
6GR–85896–00	22 – 20
6KN–8591A–00	21 – 3
6LB–8591A–00	21 – 3
6GR–8591B–00	21 – 5
6GR–86120–00	6 – 14

PART NO. N° PIECES	REF. NO.
6Y8–86260–03	50 – 2
6Y8–86260–12	50 – 2
6AA–86261–01	50 – 3
6AA–86261–22	50 – 3
6Y8–86267–00	50 – 1
6GR–8A411–00	17 – 14
K0F–A3741–00	8 – 5
K0F–A3742–00	8 – 6
K0F–A3743–00	8 – 3
6KN–W0001–01	52 – 1
6GR–W0001–23	53 – 1
6GR–W0005–00	18 – 32
6GR–W0078–01	1 – 19
	53 – 31
6KN–W009A–01–9S	5 – 1
6KN–W009C–01–9S	5 – 11
6GR–W1165–10	4 – 17
6GR–W436G–00–8D	36 – 4
6GR–W436G–00–CE	36 – 4
6GR–W4624–00	9 – 15
6KN–W8145–00	20 – 1
6GR–W85AA–02	24 – 1
6EK–W9010–00	20 – 2
90101–12067	35 – 30
90101–12068	35 – 30
90101–12069	35 – 30
90101–12070	35 – 30
90101–12072	35 – 30
90101–12073	35 – 30
	35 – 30
90101–12074	35 – 30
90105–06028	22 – 2
90105–06035	6 – 16
90105–06037	3 – 21
	3 – 23
	3 – 28
	3 – 30
	3 – 42
	9 – 14
90105–06151	12 – 7
90105–06M07	5 – 24
90105–08175	3 – 8
	3 – 15
	5 – 32
	13 – 12
	18 – 29
	21 – 15
90105–08220	3 – 9

PART NO. N° PIECES	REF. NO.
90105–08220	5 – 31
	14 – 14
90105–08277	14 – 12
90105–08279	13 – 14
90105–08M36	11 – 6
90105–10257	46 – 20
	49 – 20
90105–10446	4 – 9
90105–14012	37 – 14
90105–16004	37 – 21
90109–06286	3 – 36
90110–06038	6 – 18
90110–06191	36 – 36
90110–06425	46 – 13
	46 – 17
	49 – 13
	49 – 17
90110–08M05	39 – 47
90110–10053	46 – 5
	49 – 5
90110–10054	46 – 5
	49 – 5
90110–10055	46 – 5
	49 – 5
90111–06142	32 – 11
	32 – 16
90111–06144	29 – 31
	32 – 10
	32 – 15
	36 – 6
	36 – 8
	36 – 21
90111–06175	30 – 15
	30 – 24
90111–06176	30 – 16
90111–08078	2 – 10
90116–08037	13 – 10
	18 – 30
90116–10066	46 – 1
	49 – 1
90116–10067	46 – 1
	49 – 1
90119–06299	15 – 24
90119–06309	16 – 31
90119–06MA6	10 – 11
90119–07234	5 – 9
	5 – 19
90119–07235	5 – 8

PART NO. N° PIECES	REF. NO.
90119–07235	5 – 18
90119–08022	10 – 5
	10 – 10
90119–08175	34 – 2
90119–08176	36 – 3
90119–08187	29 – 4
90119–08196	44 – 39
	47 – 39
	53 – 40
90119–10009	41 – 21
	46 – 4
	49 – 4
90119–10024	37 – 18
	41 – 21
	46 – 1
	49 – 1
90119–10040	35 – 14
	40 – 23
	43 – 6
	49 – 5
90119–10050	9 – 7
90119–10058	37 – 26
90119–10060	46 – 4
	49 – 4
90119–10064	35 – 13
90119–10074	43 – 4
90119–10075	40 – 24
90149–05044	36 – 23
90149–11001	5 – 30
90151–06069	3 – 32
90167–05017	30 – 9
90167–06M00	50 – 12
90170–18009	45 – 9
	48 – 9
90170–35M34	44 – 48
	47 – 48
90171–18M04	46 – 24
	49 – 24
90173–06001	32 – 12
90179–08003	23 – 2
90179–08M34	13 – 11
	18 – 31
90179–14009	36 – 43
90183–02M03	45 – 22
	48 – 23
90185–06M07	34 – 15
	46 – 11
	46 – 15
	49 – 11

PART NO. N° PIECES	REF. NO.
90185–06M07	49 – 15
90201–02M00	45 – 21
	48 – 22
90201–06068	34 – 13
90201–06M30	50 – 13
90201–10048	34 – 10
90201–10081	34 – 23
90201–12060	35 – 31
90201–12064	34 – 5
90201–12426	35 – 32
90201–13M19	35 – 33
90201–156J2	31 – 13
90201–15M58	37 – 12
90201–16M55	37 – 11
90201–18029	38 – 15
90201–18030	37 – 23
90201–186F1	14 – 11
90201–19M01	46 – 23
	49 – 23
90201–253K0	48 – 13
90201–40008	45 – 30
90201–51014	37 – 2
90201–54008	45 – 13
90202–08M41	34 – 14
90202–32M19	37 – 10
90202–51001	37 – 5
90206–15M18	31 – 12
90214–35M07	44 – 47
	47 – 47
90240–05002	31 – 8
90249–06M19	35 – 23
90269–05005	20 – 16
90282–05008	45 – 37
	48 – 37
90338–07012	30 – 25
90340–08003	46 – 6
	49 – 6
90340–18M09	14 – 10
90340–24001	3 – 3
90340–27001	3 – 12
90340–32011	40 – 2
90340–97002	5 – 5
	5 – 15
90344–51019	5 – 4
	5 – 14
90386–10M16	35 – 21
90386–12M61	34 – 22
90386–15M73	31 – 11

PART NO. N° PIECES	REF. NO.
90386–20002	35 – 27
90386–49001	37 – 4
90387–06119	20 – 19
	20 – 24
	22 – 24
	22 – 30
90387–06176	21 – 9
	24 – 20
	27 – 4
90387–06289	16 – 30
90387–08104	34 – 3
90387–08M37	29 – 3
90387–08M45	2 – 13
90387–10094	2 – 11
90387–11005	5 – 29
90401–12002	9 – 9
90401–19001	12 – 4
90430–06M03	5 – 25
90430–10004	21 – 28
90430–24239	3 – 4
90440–27005	41 – 13
90440–27006	41 – 13
90440–27007	41 – 13
90445–09063	14 – 17
90445–09095	14 – 20
90445–09104	14 – 16
90445–09304	7 – 14
90445–09M00	7 – 7
90445–16025	29 – 24
90450–14M05	26 – 4
90450–35003	40 – 29
90460–15227	29 – 35
90462–10033	36 – 12
90464–09028	14 – 23
90464–09129	22 – 28
90464–09M47	22 – 10
	25 – 2
90464–11121	16 – 12
90464–12009	16 – 45
	16 – 47
90464–12010	16 – 46
90464–12012	25 – 5
90464–12015	22 – 19
	40 – 34
90464–12183	10 – 16
	10 – 22
	20 – 11
	21 – 12

PART NO. N° PIECES	REF. NO.
90464–12183	36 – 40
90464–13249	10 – 17
	10 – 21
	16 – 13
	21 – 22
	21 – 31
	22 – 17
	24 – 23
	27 – 5
90464–15195	25 – 13
90464–16015	18 – 33
90464–18004	14 – 29
	14 – 30
	25 – 7
90464–18246	16 – 14
90464–19M45	40 – 33
90464–20181	3 – 45
	10 – 14
	10 – 15
	10 – 20
	14 – 26
	14 – 27
	21 – 19
	22 – 5
	22 – 8
	22 – 14
	22 – 18
90464–29223	18 – 16
90464–30001	24 – 22
90464–32002	21 – 11
90464–36005	36 – 18
90464–44002	25 – 12
90464–55002	36 – 19
90464–66001	43 – 35
90464–99004	10 – 4
90464–99006	29 – 33
90465–11M10	7 – 10
	14 – 21
	14 – 22
	16 – 10
	16 – 18
	16 – 25
	18 – 20
	36 – 11
	40 – 10
	42 – 2
	42 – 5
	42 – 7

PART NO. N° PIECES	REF. NO.
90465–11M10	42 – 10
	50 – 10
90465–11M59	7 – 11
	40 – 13
90465–13M24	7 – 15
	25 – 6
90465–13M60	16 – 42
90465–13M97	17 – 13
	17 – 18
	18 – 28
	26 – 12
90467–120A7	16 – 39
90467–140A9	16 – 32
	16 – 36
	16 – 43
90467–141A1	17 – 6
	18 – 10
	18 – 15
90467–141A2	16 – 33
90467–150A5	7 – 4
	29 – 29
90467–160A7	29 – 28
90468–18008	34 – 16
	34 – 19
90468–180A0	34 – 18
90480–10M23	16 – 29
90480–12314	20 – 21
	20 – 26
	22 – 27
	22 – 33
	24 – 28
90480–13034	30 – 17
90480–14M17	32 – 2
	32 – 6
	32 – 14
90480–16015	30 – 13
	30 – 22
90480–20006	51 – 1
90480–20M05	29 – 25
	43 – 24
90480–22M81	29 – 2
90501–10M77	45 – 23
	48 – 24
90501–200A2	43 – 23
90506–16010	35 – 24
91317–06014	4 – 6
91318–03005	39 – 40
91318–03025	39 – 39

PART NO. N° PIECES	REF. NO.
91318–05030	39 – 38
91318–05045	39 – 45
91380–04010	36 – 31
91380–05016	44 – 20
	47 – 20
91380–10020	35 – 6
91490–20015	34 – 8
91490–20025	36 – 45
91490–40030	46 – 25
	49 – 25
91690–30020	35 – 25
91690–40018	5 – 10
	5 – 20
91690–50014	10 – 6
91690–60022	35 – 26
91809–08006	5 – 7
	5 – 17
92990–06100	2 – 16
92990–08600	2 – 12
92990–10300	46 – 19
	49 – 19
92995–10600	46 – 2
	49 – 2
92995–14600	37 – 16
93101–30037	44 – 43
	47 – 43
	53 – 29
93101–37001	45 – 36
	48 – 36
	53 – 30
93102–26004	40 – 4
	53 – 7
93102–38008	9 – 10
	52 – 17
93102–85010	4 – 7
	52 – 16
93102–90004	4 – 3
	52 – 15
93106–14001	44 – 13
	47 – 13
	53 – 27
93109–26001	44 – 26
	47 – 26
	53 – 28
93210–04279	50 – 9
93210–04N51	39 – 30
93210–064A5	39 – 25
93210–06ME6	36 – 25

PART NO. N° PIECES	REF. NO.
93210–07100	41 – 18
	41 – 18
	44 – 11
	47 – 11
	53 – 18
93210–09165	1 – 16
	38 – 49
	46 – 9
	49 – 9
	53 – 17
93210–10010	41 – 16
	41 – 16
	44 – 4
	47 – 4
	53 – 15
93210–11001	22 – 21
93210–11073	34 – 24
93210–12327	38 – 29
93210–13M63	3 – 40
	13 – 7
	14 – 4
	52 – 12
93210–17MF9	36 – 15
93210–18322	5 – 6
	5 – 16
93210–18397	38 – 16
93210–19123	1 – 15
	46 – 8
	49 – 8
	53 – 16
93210–19MJ3	43 – 18
	53 – 5
93210–24M79	12 – 9
	52 – 21
93210–260A5	4 – 10
93210–26658	3 – 10
	52 – 8
93210–27370	23 – 8
93210–28646	6 – 8
	52 – 5
93210–32172	40 – 3
93210–34633	1 – 7
	43 – 13
	53 – 4
93210–37160	44 – 30
	47 – 30
	53 – 22
	53 – 36

PART NO. N° PIECES	REF. NO.
93210–44006	38 – 13
	38 – 19
93210–49003	37 – 3
93210–49046	38 – 6
93210–64488	44 – 12
	47 – 12
	53 – 19
93210–65001	14 – 7
93210–66001	38 – 46
93210–85003	14 – 8
93210–89535	44 – 42
	47 – 42
	53 – 25
93210–97690	44 – 23
	47 – 23
	53 – 20
	53 – 32
93211–08001	44 – 29
	47 – 29
	53 – 21
	53 – 35
93211–26001	45 – 34
	48 – 34
	53 – 26
93306–01501	45 – 26
93311–675A1	45 – 2
	48 – 2
93311–737A2	45 – 35
	48 – 35
93311–944A0	45 – 1
	48 – 1
93332–00042	45 – 29
93332–000A0	45 – 11
93332–000B2	48 – 27
93340–69012	45 – 4
	48 – 4
93341–440U5	48 – 30
93390–00033	48 – 11
93399–99967	44 – 46
	47 – 46
93410–46099	37 – 7
93420–36M01	43 – 14
93440–25020	48 – 14
93450–42110	38 – 23
93450–92171	45 – 3
	48 – 3
93501–04011	45 – 24
	48 – 25

NUMERICAL INDEX
INDEX NUMERIQUE

PART NO. N° PIECES	REF. NO.
93501–08001	39 – 27
93505–32038	38 – 12
	39 – 22
93603–08072	39 – 14
93604–26256	39 – 37
93606–12019	3 – 5
	3 – 6
	3 – 14
	4 – 2
	14 – 15
	41 – 4
	41 – 9
	43 – 7
	43 – 11
	44 – 37
	47 – 37
	53 – 39
93606–16117	45 – 7
	48 – 7
93608–12M05	44 – 38
	47 – 38
93608–16M16	13 – 13
	40 – 25
93700–06002	35 – 16
94581–99044	9 – 11
94702–00447	1 – 18
	5 – 33
95022–06035	20 – 5
95380–06600	2 – 15
95380–10600	46 – 3
	49 – 3
95380–10700	34 – 9
95380–12600	35 – 34
95380–14800	37 – 15
95780–06300	50 – 14
95780–06500	24 – 16
95780–08300	2 – 14
95780–10300	35 – 29
95817–06075	12 – 2
95D95–06012	10 – 19
	16 – 28
	20 – 13
	26 – 14
	30 – 3
	30 – 7
	31 – 6
	35 – 18
	36 – 13

PART NO. N° PIECES	REF. NO.
95D95–06012	36 – 39
	36 – 42
	40 – 32
95D95–06014	18 – 24
95D95–06016	14 – 25
	16 – 15
	16 – 21
	16 – 49
	20 – 10
	21 – 6
	21 – 18
	21 – 21
	21 – 30
	22 – 4
	22 – 7
	22 – 13
	22 – 16
	24 – 15
	24 – 27
	24 – 30
	26 – 11
	40 – 18
	43 – 19
95D95–06020	6 – 21
	21 – 4
	29 – 7
	32 – 4
	32 – 8
	40 – 21
	40 – 27
	43 – 31
95D95–06025	6 – 9
	10 – 2
	20 – 18
	20 – 23
	22 – 26
	22 – 32
	23 – 9
	43 – 25
95D95–06030	6 – 5
	6 – 13
	20 – 6
	41 – 2
95D95–06040	43 – 26
95D95–08012	31 – 16
95D95–08016	23 – 6
	23 – 16
	23 – 20

PART NO. N° PIECES	REF. NO.
95D95–08020	23 – 5
	24 – 25
95D95–08025	5 – 26
97095–05010	44 – 19
	47 – 19
97513–08545	23 – 1
97580–08535	36 – 29
97595–05516	36 – 16
97602–04310	39 – 8
97607–04208	6 – 3
	6 – 11
97780–40112	27 – 9
97780–40125	51 – 4
97780–50625	21 – 33
97780–60620	21 – 25
	50 – 7
97880–06035	50 – 12
97980–06216	50 – 4
97985–05210	2 – 4
97D95–06012	40 – 6
	42 – 13
	43 – 33
97D95–06018	36 – 34
97E75–08535	34 – 7
97E75–10570	40 – 22
	41 – 3
	41 – 8
	43 – 5
	43 – 9
97E75–10580	43 – 10
97E95–06510	35 – 10
	37 – 28
97E95–06516	17 – 19
	20 – 8
	25 – 8
97E95–06520	21 – 2
	22 – 22
97E95–06530	35 – 4
97E95–06540	34 – 21
97E95–08520	44 – 44
	47 – 44
97E95–08525	42 – 11
97E95–08535	18 – 21
	44 – 14
	47 – 14
98980–05025	3 – 39
	13 – 9
	14 – 6

PART NO. N° PIECES	REF. NO.
99002–03600	39 – 19
99002–12600	44 – 16
	47 – 16
99009–55500	45 – 32
	48 – 32
99009–62500	45 – 12
	48 – 12
99480–08030	41 – 20
	41 – 20
	44 – 6
	47 – 6

PART NO. N° PIECES	REF. NO.

PART NO. N° PIECES	REF. NO.