YAMAHA

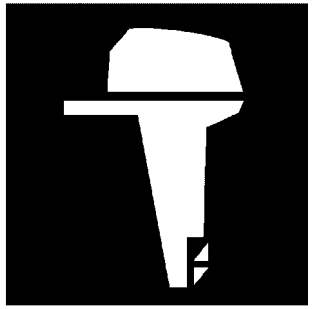

PARTS CATALOGUE
CATALOGUE DE PIECES DETACHEES

XF425

YAMAHA GENUINE Parts & Accessories

1W6GR-300FA

( )

XF425
PARTS CATALOGUE
©2024 by Yamaha Motor Co., Ltd.
1st edition, July 2024
All rights reserved.
Any reprinting or unauthorized use
without the written permission of
Yamaha Motor Co., Ltd.
is expressly prohibited.
Printed in Japan.

XF425
CATALOGUE DE PIECES DETACHEES
©2024 par Yamaha Motor Co., Ltd.
1re édition, juillet 2024
Tous droits réservés
Toute réimpression ou utilisation
non autorisée sans la permission écrite
de Yamaha Motor Co., Ltd.
est formellement interdite.
Imprimé au Japon

FOREWORD

This Parts Catalogue is related to the parts for the model(s) on the cover page. When you are ordering replacement parts, please refer to this Parts Catalogue and quote both part numbers and part names correctly.

1. Modifications or additions which have been made after the issue of the Parts Catalogue will be announced in the Parts News.
   It is advisable that you make the necessary corrections to the Parts Catalogue according to the Parts News.

2. Abbreviations
   The following abbreviations are used in this Parts Catalogue.
   "UR" Use specified parts number.
   "UN" Use as many as needed.
   "AP" Alternate Parts
   "LM" Locally Made (Parts need to be ordered locally)
   "F#" Frame No. (Applicable machine No.)
   "O/S" Over Size

3. The number of components for assembly
   - Parts, which are to be supplied in an assembly, are listed with a dot (.) in front of the part name as shown below.
   - The numeral appearing to the right of each component part indicates the quantity of parts for each assembly unit.

PART NO.	DESCRIPTION	Q'TY	REMARKS
2F5–83310–60	FRONT FLASHER LIGHT ASSY	2	
115–83311–60	.BULB (6V–18W)	1	

4. Applicable colours of graphics are represented in the "REMARKS" as shown below.

PART NO.	DESCRIPTION	Q'TY	REMARKS
2N4–24110–00–X5	FUEL TANK COMP.	2	MXR
3J1–24240–10	.GRAPHIC, FUEL TANK	1	FOR MXR

5. Note that the illustrations for reference in finding parts numbers are not to be used for assembling. When assembling, please use the applicable service manual.

6. The asterisk (*) before a reference number indicates modified items after the first edition.

7. Applicable Serial No.
   Engine Serial No.

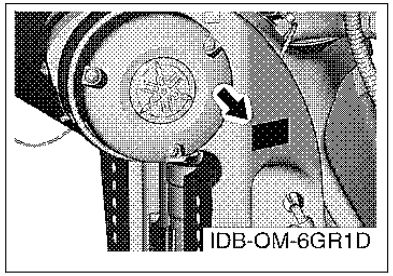

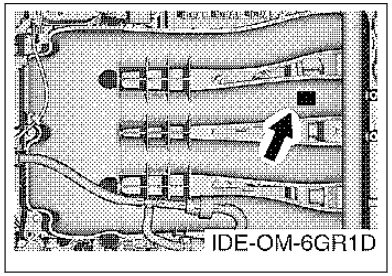

8. Applicable Engine Starting Serial No.

Model	Serial No.	Model	Serial No.
XF425	6GR-1008347		

9. Applicable Colour Code

Abbreviation	Colour Name	Colour Code
DBN1	DARK BLUISH GRAY 1	008D

10. Quantity Column Information

Column No.	Name Of Q'ty Column	Applicable Model
1	NS	XF425NSA
2	NS2	XF425NSA2

AVANT–PROPOS

Ce catalogue de pièces détachées concerne les pièces pour le(s) modèle(s) indiqué(s) sur la page de couverture. Lorsque vous commandez des pièces de rechange, veuillez vous référer à ce catalogue de pieces détachées et indiquer clairement les numéros et les noms des pièces détachées.

1. Les modifications ou ajouts ayant été effectués après la parution du catalogue de pièces détachées seront décrits dans les Bulletins d'information concernant les pièces détachées.
   Il est recommandé que vous apportiez les corrections nécessaires au catalogue des pièces détachées en vous référant aux Bulletins d'information.

2. Abréviations
   Dans ce catalogue, les abréviations suivantes sont utilisées:
   "UR" Utiliser le numéro de pièces spécifié.
   "UN" Utiliser autant que nécessaire.
   "AP" Pièces de substitution
   "LM" Fabrication locale (les pièces doivent être commandées localement.)
   "F#" N° de cadre (applicable au N° de série)
   "O/S" Surdimensionné

3. Nombre de pièces d'un assemblage
   - Les pièces fournies comme composants d'un assemblage sont précédées d'un point (.) de la manière indiquée ci–dessous.
   - Le chiffre apparaissant à la droite de chaque composant indique la quantité de pièces pour chaque unité d'assemblage.

N° PIECES	DESCRIPTION	QTE	REMARQUES
2F5–83310–60	ENS. CLIGNOTANT AVANT	2	
115–83311–60	.AMPOULE (6V–18W)	1	

4. Les couleurs concernant les graphiques sont indiquées dans la colonne "REMARQUES", comme indiqué ci–dessous.

N° PIECES	DESCRIPTION	QTE	REMARQUES
2N4–24110–00–X5	RESERVOIR A ESSENCE.	2	MXR
3J1–24240–10	.GRAPHIQUE	1	POUR MXR

5. Veuillez noter que les illustrations sont indiquées à titre de référence pour trouver les numéros de pièces, non pour être utilisées lors de l'assemblage. Lors de l'assemblage, veuillez utiliser le manuel d'entretien adéquat.

6. L'astérisque (*) placé devant un numéro de référence indique des éléments qui ont été modifiés après la première édition.

7. N° de série applicable
   N° de Série du moteur

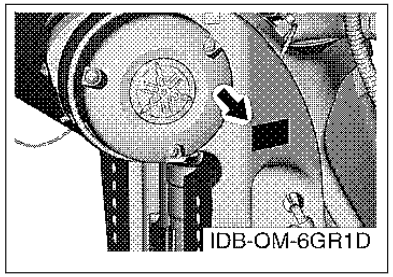

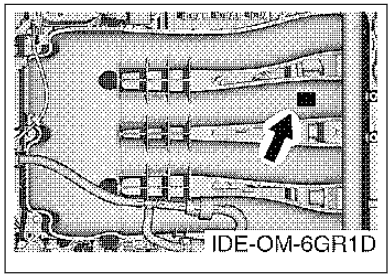

8. N° de série initial du moteur applicable

Modèle	N° de série	Modèle	N° de série
XF425	6GR-1008347		

9. Code couleur applicable

Abréviation	Nom de la couleur	Code couleur
DBN1	DARK BLUISH GRAY 1	008D

10. Informations relatives à la colonne Quantité

N° de la colonne	Nom de la colonne Qté	Modèle applicable
1	NS	XF425NSA
2	NS2	XF425NSA2

CONTENTS

SCHEDULED SERVICE PARTS....1
TOP COWLING....2
CYLINDER & CRANKCASE 1....3
CRANKSHAFT & PISTON....5
CYLINDER & CRANKCASE 2....7
CYLINDER & CRANKCASE 3....9
CYLINDER & CRANKCASE 4....10
VALVE 1....11
VALVE 2....13
INTAKE....14
THROTTLE BODY ASSY....15
OIL PUMP....16
EXHAUST 1....17
EXHAUST 2....18
VAPOR SEPARATOR....20
FUEL 1....21
FUEL 2....23
FUEL 3....24
FUEL 4....26
GENERATOR....27
ELECTRICAL 1....29
ELECTRICAL 2....31
ELECTRICAL 3....33
ELECTRICAL 4....34
ELECTRICAL 5....36
ELECTRICAL 6....37
STARTING MOTOR....38
BOTTOM COWLING 1....39
BOTTOM COWLING 2....41
BOTTOM COWLING 3....43
BOTTOM COWLING 4....44
GRAPHIC & TOOL....45
CONTROL....46
BRACKET 1....47
BRACKET 2....49
BRACKET 3....51
POWER TRIM & TILT ASSY 1....53
POWER TRIM & TILT ASSY 2....55
UPPER CASING 1....57
UPPER CASING 2....59
UPPER CASING 3....61
OIL PAN....62
LOWER CASING & DRIVE 1....64
LOWER CASING & DRIVE 2....67
LOWER CASING & DRIVE 3....70
LOWER CASING & DRIVE 4....72
LOWER CASING & DRIVE 5....75
LOWER CASING & DRIVE 6....78
OPTIONAL PARTS....80
REPAIR KIT 1....81
REPAIR KIT 2....82

INDEX

NUMERICAL INDEX....84

TABLE DES MATIERES

PIECES MAINTENANCE PERIODIQUE.....1
CAPOT SUPERIEUR..... 2
CYLINDRE & CARTER 1..... 3
VILEBREQUIN & PISTON.....5
CYLINDRE & CARTER 2..... 7
CYLINDRE & CARTER 3..... 9
CYLINDRE & CARTER 4..... 10
SOUPAPE 1..... 11
SOUPAPE 2..... 13
ADMISSION.....14
CARTER D'ACCELERATEUR.....15
POMPE A HUILE.....16
ECHAPPEMENT 1..... 17
ECHAPPEMENT 2..... 18
VAPEUR SEPARATEUR.....20
CARBURANT 1..... 21
CARBURANT 2..... 23
CARBURANT 3..... 24
CARBURANT 4..... 26
GENERATRICE.....27
PARTIE ELECTRIQUE 1.....29
PARTIE ELECTRIQUE 2.....31
PARTIE ELECTRIQUE 3.....33
PARTIE ELECTRIQUE 4.....34
PARTIE ELECTRIQUE 5.....36
PARTIE ELECTRIQUE 6.....37
DEMARREUR ELECTRIQUE.....38
CAPOT INFERIEUR 1.....39
CAPOT INFERIEUR 2.....41
CAPOT INFERIEUR 3.....43
CAPOT INFERIEUR 4.....44
GRAPHIQUE & OUTIL..... 45
COMMANDE..... 46
SUPPORT 1..... 47
SUPPORT 2..... 49
SUPPORT 3..... 51
PUISSANCE PARER ET INCLINER 1..... 53
PUISSANCE PARER ET INCLINER 2..... 55
FOURREAU 1.....57
FOURREAU 2.....59
FOURREAU 3.....61
VENTILATEUR D'HUILE..... 62
BOITIER D'HELICE TRANSMISSION1.....64
BOITIER D'HELICE TRANSMISSION2.....67
BOITIER D'HELICE TRANSMISSION3.....70
BOITIER D'HELICE TRANSMISSION4.....72
BOITIER D'HELICE TRANSMISSION5.....75
BOITIER D'HELICE TRANSMISSION6.....78
PIECES OPTIONNELLES.....80
KITS DE REPARATION 1..... 81
KITS DE REPARATION 2..... 82

INDEX

INDEX NUMERIQUE.....84

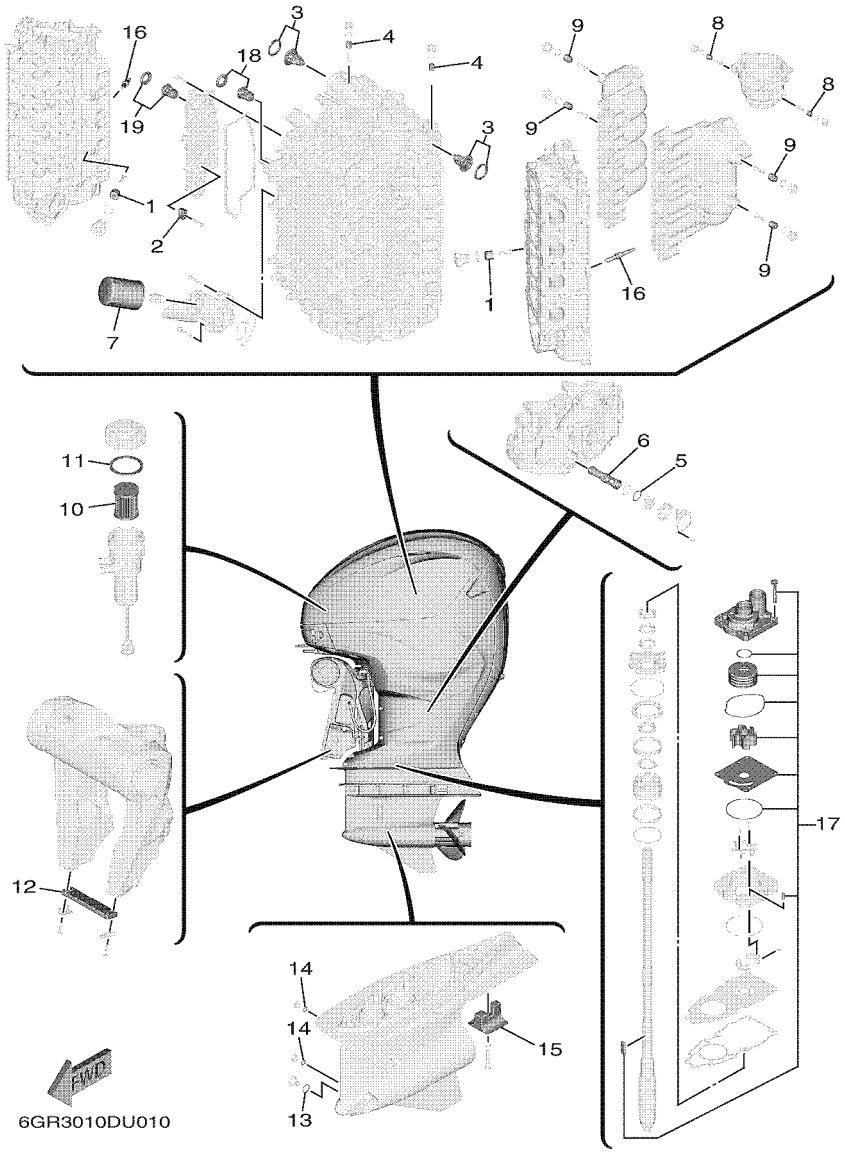

FIG. 1 SCHEDULED SERVICE PARTS — PIECES MAINTENANCE PERIODIQUE

REF. NO.	PART NO. N° PIECES	DESCRIPTION DESCRIPTION	NS	NS2				REMARKS REMARQUES
1	6AW–1132L–00	ANODE 2 ANODE 2	6	6				
2	6AW–1132P–00	ANODE 5 ANODE 5	3	3				
3	6GR–12411–00	THERMOSTAT THERMOSTAT	2	2				
4	6G8–11325–00	ANODE ANODE	2	2				
5	93210–34633	O-RING JOINT TORIQUE	1	1				
6	6GR–13411–00	STRAINER, OIL FILTRE, HUILE	1	1				
7	N26–13440–03	ELEMENT ASSY, OIL CLEANER ELEMENT, FILTRE A HUILE	1	1				
8	6G8–11325–00	ANODE ANODE	2	2				
9	6G8–11325–00	ANODE ANODE	4	4				
10	6P3–24563–02	ELEMENT, FILTER ELEMENT, FILTRE	1	1				
11	6P3–24564–00	GASKET JOINT	1	1				
12	6AW–45251–00	ANODE ANODE	1	1				
13	93210–19123	O-RING JOINT TORIQUE	1	1				
14	93210–09165	O-RING JOINT TORIQUE	2	2				
15	6AW–45373–00	ANODE ANODE	1	1				
16	94702–00442	PLUG, SPARK (NGK ILMAR7E9) BOUGIE D,ALLUMAGE (NGK ILMAR7E	8	8				
17	6GR–W0078–01	WATER PUMP REPAIR KIT KIT DE REPARATION DE LA POMPE	1	1				
18	6H3–12411–20	THERMOSTAT THERMOSTAT	1	1				
19	66M–12411–01	THERMOSTAT THERMOSTAT	1	1				

FIG. 2 TOP COWLING — CAPOT SUPERIEUR

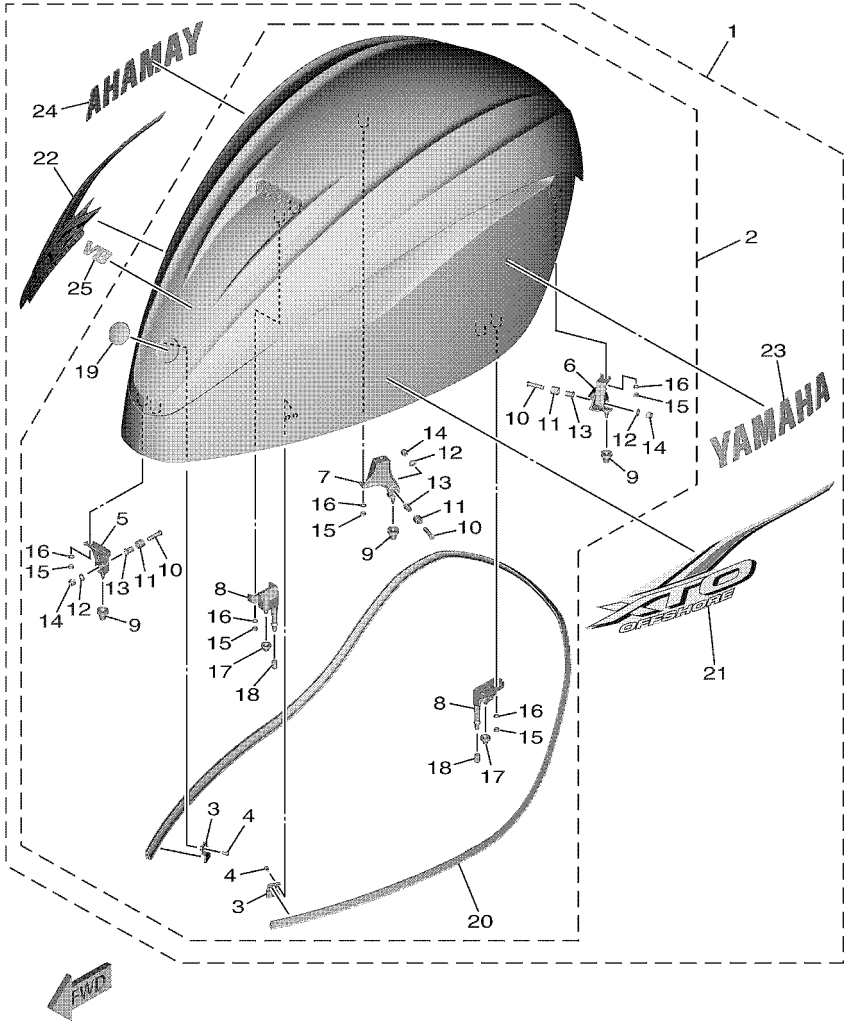

REF. NO.	PART NO. N° PIECES	DESCRIPTION DESCRIPTION	NS	NS2				REMARKS REMARQUES
1	6GR–42610–03–8D	TOP COWLING ASSY CAPOT (ENS.)	1					UR GRAY UR GRAY
	6GR–42610–03–CE	TOP COWLING ASSY CAPOT (ENS.)		1				UR WHITE UR WHITE
2	6GR–4261A–03–8D	.TOP COWLING W/O GRAPHICS .CAPOT SUPERIEUR SANS GRAPHIQUE	1					UR GRAY UR GRAY
	6GR–4261A–03–CE	.TOP COWLING W/O GRAPHICS .CAPOT SUPERIEUR SANS GRAPHIQUE		1				UR WHITE UR WHITE
3	6GR–42477–00	..PLATE, LOCK ..PLAQUE BUTEE	2	2				
4	97985–05210	..SCREW, WITH WASHER ..VIS, AVEC RONDELLE	4	4				
5	6GR–42647–00	..HOLDER, CLAMP BAND ..SUPPORT, SANDOW DE SERRAGE	1	1				
6	6GR–42648–00	..HOLDER, CLAMP BAND ..SUPPORT, SANDOW DE SERRAGE	1	1				
7	6GR–42649–00	..HOLDER, CLAMP BAND ..SUPPORT, SANDOW DE SERRAGE	1	1				
8	6GR–42643–00	..PLATE, CLAMP ..PLAQUE, PRESSE	2	2				
9	6AW–42663–01	..DAMPER 2 ..AMORTISSEUR 2	3	3				
10	90111–08078	..BOLT,HEX. SOCKET BUTTON ..BOULON	3	3				
11	90387–10094	..COLLAR ..COLLERETTE	3	3				
12	92990–08600	..WASHER, PLATE ..RONDELLE, PLATE	3	3				
13	90387–08M45	..COLLAR ..COLLERETTE	3	3				
14	95780–08300	..NUT, FLANGE ..ECROU	3	3				
15	95380–06600	..NUT, HEXAGON ..ECROU	10	10				
16	92990–06100	..WASHER, SPRING ..RONDELLE, GROWER	10	10				
17	663–42662–01	..DAMPER ..AMORTISSEUR	2	2				
18	67F–13448–00	..CAP ..CAPUCHON	2	2				
19	F2S–6411H–00	..EMBLEM, TUNING FORK ..EMBLEME, DIAPASON	1	1				
20	6GR–42629–00	..SEAL ..JOINT	1	1				
21	6GR–42675–00	.GRAPHIC, SIDE 1 .EMBLEME	1	1				
22	6GR–42676–00	.GRAPHIC, SIDE 2 .EMBLEME	1	1				
23	6GR–2153A–00	.EMBLEM, YAMAHA .EMBLEME, YAMAHA	1	1				
24	6GR–2153B–00	.EMBLEM, YAMAHA .EMBLEME, YAMAHA	1	1				
25	6GR–42677–00	.GRAPHIC, FRONT .ADHESIF, AVANT	1	1				

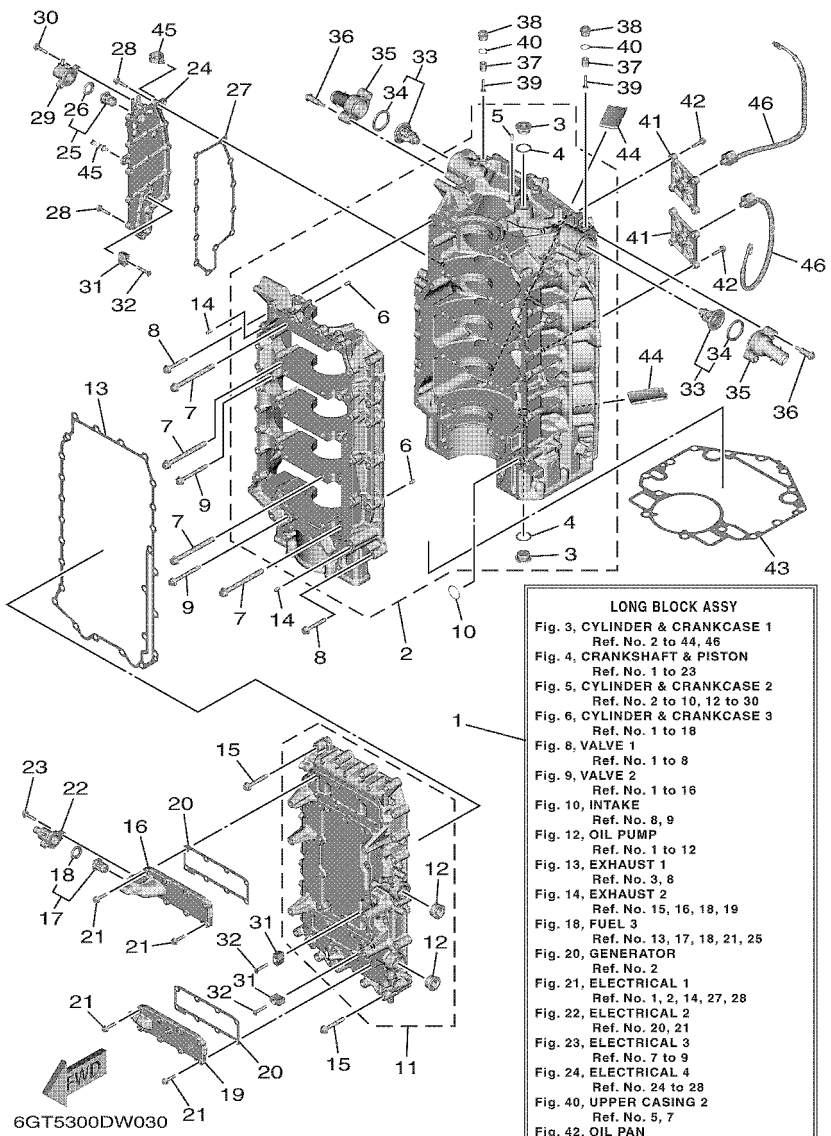

FIG. 3 CYLINDER & CRANKCASE 1 — CYLINDRE & CARTER 1

REF. NO.	PART NO. N° PIECES	DESCRIPTION DESCRIPTION	NS	NS2				REMARKS REMARQUES
1	6GR–11000–01	LONG BLOCK ASSY SOUS-ASSEMBLEE DU MOTEUR	1	1				
2	6GR–15109–01–9S	CRANKCASE ASSY CARTER DE MOTEUR COMPLET	1	1				
3	90340–24001	.PLUG, STRAIGHT SCREW .PLOT, FILETE DROIT	2	2				
4	90430–24239	.GASKET .JOINT	2	2				
5	93606–12019	.PIN, DOWEL .GOUPILLE	1	1				
6	93606–12019	.PIN, DOWEL .GOUPILLE	10	10				
7	6P2–15187–00	BOLT BOULON	20	20				
8	90105–08175	BOLT, FLANGE BOULON, A COLLERETTE	10	10				
9	90105–08220	BOLT, FLANGE BOULON, A COLLERETTE	6	6				
10	93210–26658	O-RING JOINT TORIQUE	1	1				
11	6GR–15411–00–9S	COVER, CRANKCASE 1 COUVERCLE 1, CARTER MOTEUR	1	1				
12	90340–27001	.PLUG, STRAIGHT SCREW .PLOT, FILETE DROIT	2	2				
13	6GR–15451–00	GASKET, CRANKCASE COVER 1 JOINT, COUVERCLE DE CARTER 1	1	1				
14	93606–12019	PIN, DOWEL GOUPILLE	2	2				
15	90105–08175	BOLT, FLANGE BOULON, A COLLERETTE	26	26				
16	6GR–15414–01–9S	COVER 1 COUVERCLE 1	1	1				
17	6H3–12411–20	THERMOSTAT THERMOSTAT	1	1				
18	6H3–12412–10	.SEAL, THERMOSTAT .JOINT, THERMOSTAT	1	1				
19	6GR–15423–00–9S	COVER 2 COUVERCLE 2	1	1				
20	6GR–1131B–00	GASKET, COVER JOINT, COUVERCLE	2	2				
21	90105–06037	BOLT, FLANGE BOULON, A COLLERETTE	16	16				
22	6GR–12417–00–9S	HOUSING, THERMOSTAT BOITIER, THERMOSTAT	1	1				
23	90105–06037	BOLT, FLANGE BOULON, A COLLERETTE	2	2				
24	6GR–15413–00–9S	COVER COUVERCLE	1	1				
25	66M–12411–01	THERMOSTAT THERMOSTAT	1	1				
26	688–12412–00	.SEAL, THERMOSTAT .JOINT, THERMOSTAT	1	1				
27	6GR–15353–00	GASKET, DRAIN JOINT, PLOT DE VIDANGE	1	1				

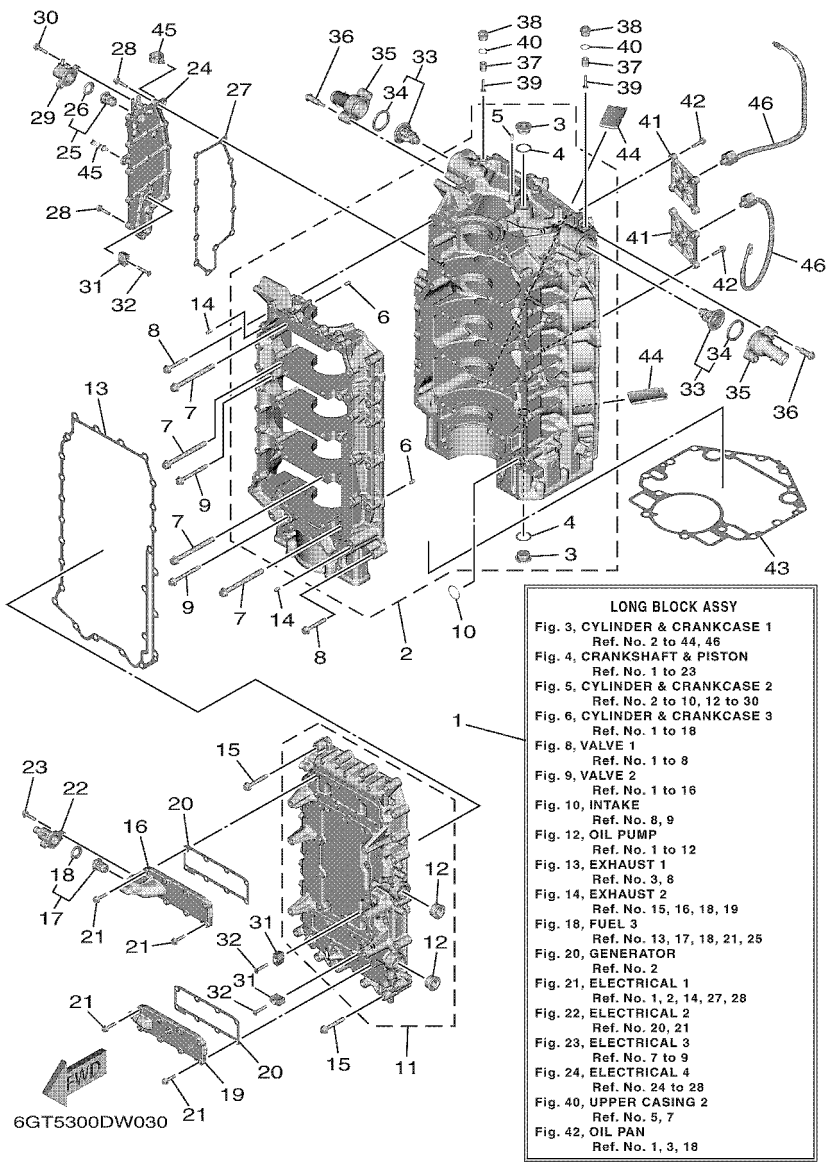

FIG. 3 CYLINDER & CRANKCASE 1 — CYLINDRE & CARTER 1

REF. NO.	PART NO. N° PIECES	DESCRIPTION DESCRIPTION	NS	NS2				REMARKS REMARQUES
28	90105–06037	BOLT, FLANGE BOULON, A COLLERETTE	12	12				
29	6GR–1241B–00–9S	COVER, THERMOSTAT 2 COUVERCLE, THERMOSTAT 2	1	1				
30	90105–06037	BOLT, FLANGE BOULON, A COLLERETTE	2	2				
31	6AW–1132P–00	ANODE 5 ANODE 5	3	3				
32	90151–06069	SCREW, COUNTERSUNK VIS, TETE NOYEE	3	3				
33	6GR–12411–00	THERMOSTAT THERMOSTAT	2	2				
34	6GR–12412–00	.SEAL, THERMOSTAT .JOINT, THERMOSTAT	1	1				
35	6GR–12413–00	COVER, THERMOSTAT COUVERCLE, THERMOSTAT	2	2				
36	90109–06286	BOLT BOULON	4	4				
37	6G8–11325–00	ANODE ANODE	2	2				
38	6G8–11197–A0	PLUG, BLIND PLOT, BORGNE	2	2				
39	98980–05025	SCREW, BIND VIS, DE PRESSION	2	2				
40	93210–13M63	O-RING JOINT TORIQUE	2	2				
41	6GR–1135A–00	BRACKET SUPPORT	2	2				
42	90105–06037	BOLT, FLANGE BOULON, A COLLERETTE	8	8				
43	6GR–11351–00	GASKET, CYLINDER JOINT, D'EMBASE	1	1				
44	6GR–14664–01	GROMMET, WATER SHUT PASSE-FIL	2	2				
45	90464–20181	CLAMP BRIDE	2	2				
46	6CJ–85780–01	SENSOR, KNOCK SONDE DE COGNEMENT	2	2				

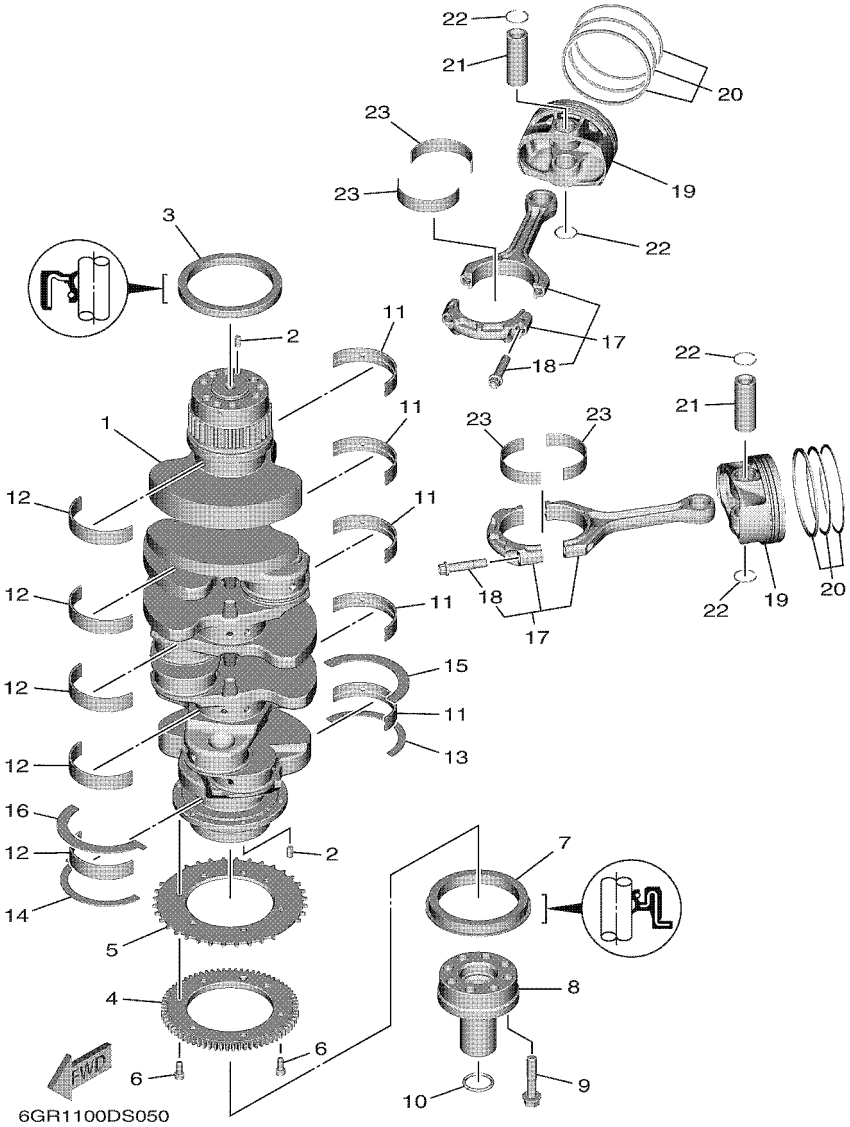

FIG. 4 CRANKSHAFT & PISTON — VILEBREQUIN & PISTON

REF. NO.	PART NO. N° PIECES	DESCRIPTION DESCRIPTION	NS	NS2				REMARKS REMARQUES
1	6GR–11411–01	CRANKSHAFT VILEBREQUIN COMPLET	1	1				
2	93606–12019	PIN, DOWEL GOUPILLE	2	2				
3	93102–90004	OIL SEAL JOINT SPY	1	1				
4	6GR–13188–00	GEAR, DRIVE PIGNON SECONDAIRE	1	1				
5	6GR–81673–00	ROTOR ROTOR	1	1				
6	91317–06014	BOLT,HEX.SOCKET HEAD BOULON, TETE HEXAGONALE CREUSE	6	6				
7	93102–85010	OIL SEAL JOINT SPY	1	1				
8	6GR–12199–00	FLANGE COLLERETTE	1	1				
9	90105–10446	BOLT, FLANGE BOULON, A COLLERETTE	8	8				
10	93210–260A5	O-RING JOINT TORIQUE	1	1				
11	6GR–11416–00	PLANE BEARING, CRANKSHAFT 1 COUSSINET DE VILEBREQUIN 1	5	5				UR BLACK UR BLACK
	6GR–11416–10	PLANE BEARING, CRANKSHAFT 1 COUSSINET DE VILEBREQUIN 1	5	5				UR BLUE UR BLUE
	6GR–11416–20	PLANE BEARING, CRANKSHAFT 1 COUSSINET DE VILEBREQUIN 1	5	5				UR PINK UR PINK
	6GR–11416–30	PLANE BEARING, CRANKSHAFT 1 COUSSINET DE VILEBREQUIN 1	5	5				UR WHITE UR WHITE
12	6GR–11417–00	PLANE BEARING, CRANKSHAFT 2 COUSSINET DE VILEBREQUIN 2	5	5				UR BLACK UR BLACK
	6GR–11417–10	PLANE BEARING, CRANKSHAFT 2 COUSSINET DE VILEBREQUIN 2	5	5				UR BLUE UR BLUE
	6GR–11417–20	PLANE BEARING, CRANKSHAFT 2 COUSSINET DE VILEBREQUIN 2	5	5				UR PINK UR PINK
	6GR–11417–30	PLANE BEARING, CRANKSHAFT 2 COUSSINET DE VILEBREQUIN 2	5	5				UR WHITE UR WHITE
13	6CB–11426–03	BEARING, THRUST 1 ROULEMENT DE BUTEE 1	1	1				
14	6CB–11427–03	BEARING, THRUST 2 ROULEMENT DE BUTEE 2	1	1				
15	6GR–11426–00	BEARING, THRUST 1 ROULEMENT DE BUTEE 1	1	1				
16	6GR–11427–00	BEARING, THRUST 2 ROULEMENT DE BUTEE 2	1	1				
17	6GR–W1165–10	CONNECTING ROD ASSY BIELLE COMPLETTE	8	8				
18	63P–11654–10	.BOLT, CONNECTING ROD .BOULON, BIELLE	2	2				
19	6GR–11631–00	PISTON (STD) PISTON (STD)	8	8				
20	6GR–11603–00	PISTON RING SET (STD) JEU DE SEGMENTS (STD)	8	8				
21	6GR–11633–00	PIN, PISTON AXE, PISTON	8	8				

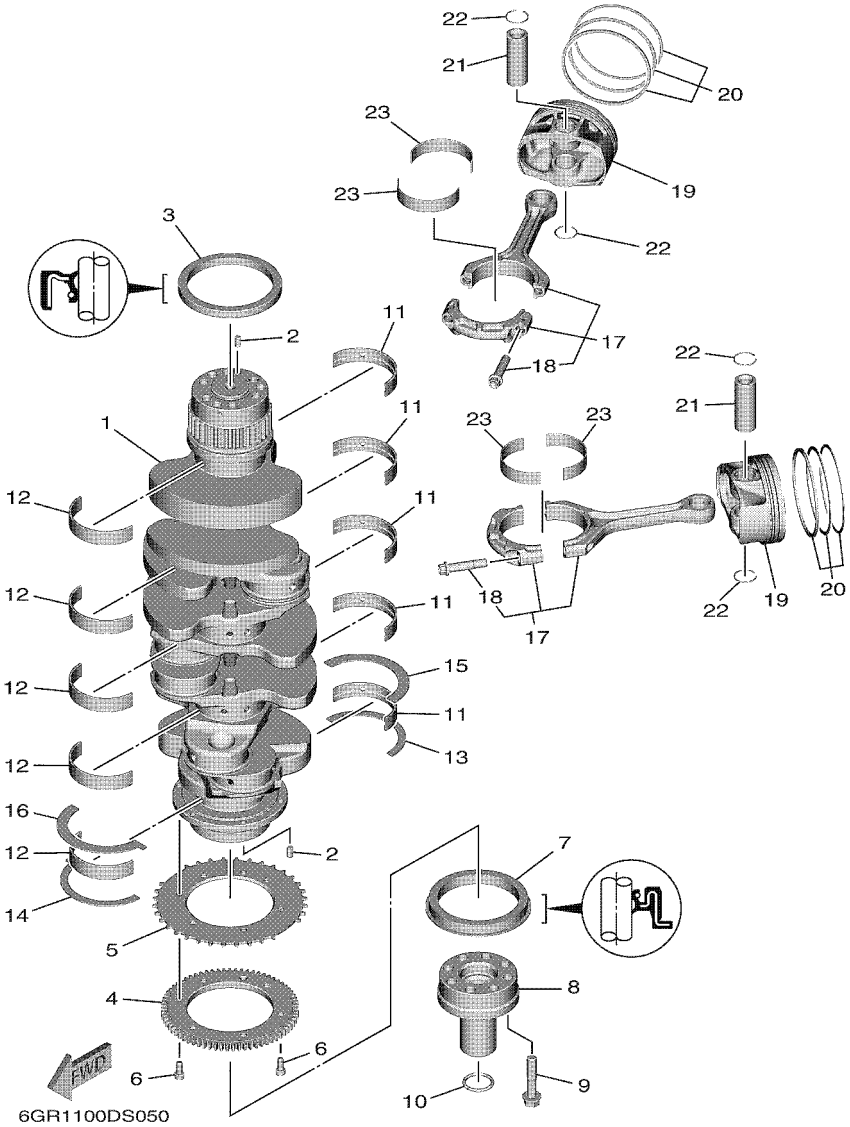

FIG. 4 CRANKSHAFT & PISTON — VILEBREQUIN & PISTON

REF. NO.	PART NO. N° PIECES	DESCRIPTION DESCRIPTION	NS	NS2				REMARKS REMARQUES
22	6GR–11634–00	CLIP, PISTON PIN AGRAFE, AXE DE PISTON	16	16				
23	6GR–11656–00	PLANE BEARING, CONNECTING ROD ROULEMENT DE BIELLE	16	16				UR YELLOW UR YELLOW
	6GR–11656–10	PLANE BEARING, CONNECTING ROD ROULEMENT DE BIELLE	16	16				UR GREEN UR GREEN
	6GR–11656–20	PLANE BEARING, CONNECTING ROD ROULEMENT DE BIELLE	16	16				UR BLUE UR BLUE

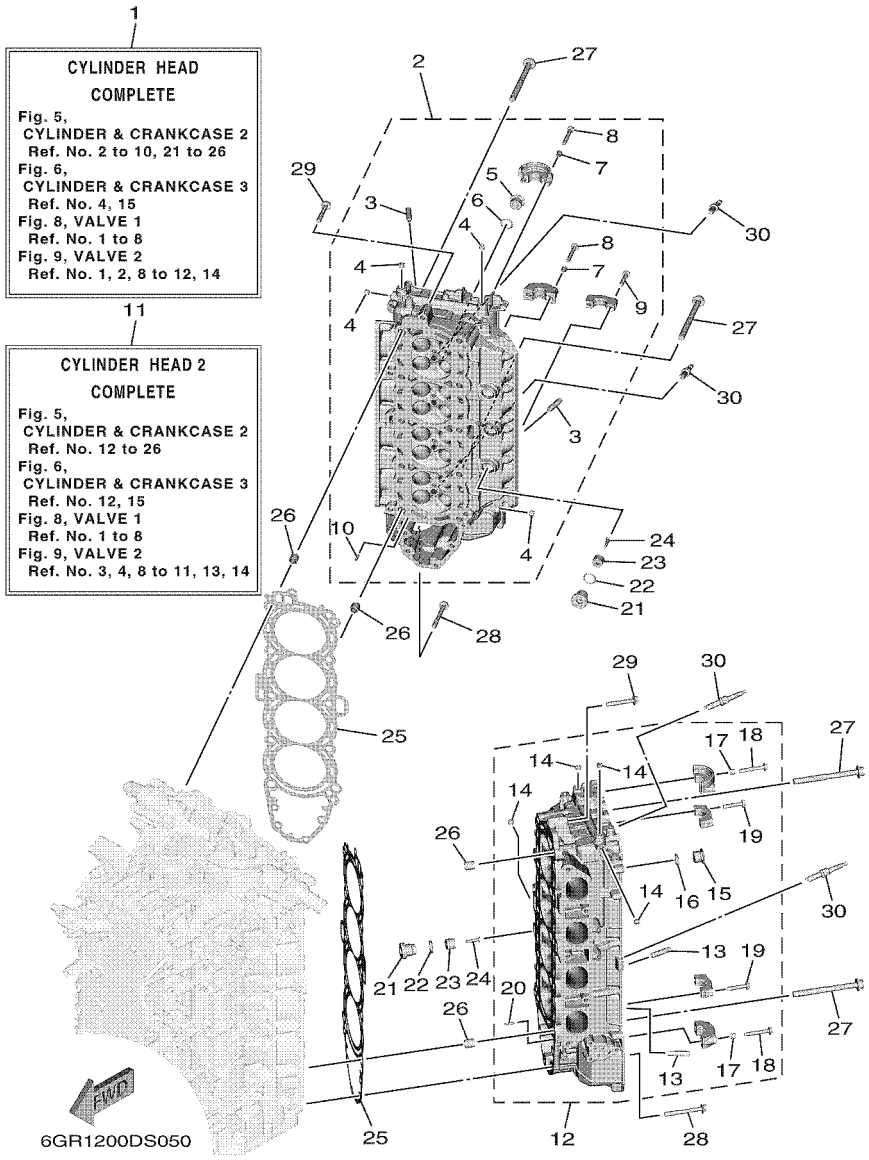

FIG. 5 CYLINDER & CRANKCASE 2 — CYLINDRE & CARTER 2

REF. NO.	PART NO. N° PIECES	DESCRIPTION DESCRIPTION	NS	NS2				REMARKS REMARQUES
1	6GR–W009A–00–9S	CYLINDER HEAD COMPLETE CULASSE (ENS.)	1	1				
2	6GR–11110–00	CYLINDER HEAD ASSY JEU DE CULASSE	1	1				
3	6DA–11133–10	.GUIDE, VALVE 1 .GUIDE, SOUPAPE 1	16	16				
4	90344–51019	.PLUG, TAPER SCREW .PLOT, FILETE CONIQUE	4	4				
5	90340–97002	.PLUG, STRAIGHT SCREW .PLOT, FILETE DROIT	3	3				
6	93210–18322	.O-RING .JOINT TORIQUE	3	3				
7	91809–08006	.PIN, DOWEL .GOUJON, D'ASSEMBLAGE	4	4				
8	90119–07235	.BOLT/WASHER-CAM CAPS .BOULON, AVEC RONDELLE	4	4				
9	90119–07234	.BOLT, WITH WASHER .BOULON, AVEC RONDELLE	18	18				
10	91690–40018	.PIN, SPRING .AGRAFFE	1	1				
11	6GR–W009C–00–9S	CYLINDER HEAD 2 COMPLETE CULASSE 2	1	1				
12	6GR–11120–00	CYLINDER HEAD ASSY 2 CULASSE 2	1	1				
13	6DA–11133–10	.GUIDE, VALVE 1 .GUIDE, SOUPAPE 1	16	16				
14	90344–51019	.PLUG, TAPER SCREW .PLOT, FILETE CONIQUE	4	4				
15	90340–97002	.PLUG, STRAIGHT SCREW .PLOT, FILETE DROIT	3	3				
16	93210–18322	.O-RING .JOINT TORIQUE	3	3				
17	91809–08006	.PIN, DOWEL .GOUJON, D'ASSEMBLAGE	4	4				
18	90119–07235	.BOLT/WASHER-CAM CAPS .BOULON, AVEC RONDELLE	4	4				
19	90119–07234	.BOLT, WITH WASHER .BOULON, AVEC RONDELLE	18	18				
20	91690–40018	.PIN, SPRING .AGRAFFE	1	1				
21	6GR–11197–00	PLUG, BLIND PLOT, BORGNE	6	6				
22	93210–19216	O-RING JOINT TORIQUE	6	6				
23	6AW–1132L–00	ANODE 2 ANODE 2	6	6				
24	98780–05025	SCREW, FLAT HEAD VIS A TETE FRAISEE	6	6				
25	6GR–11181–00	GASKET, CYLINDER HEAD 1 JOINT, DE CULASSE 1	2	2				
26	90387–11005	COLLAR COLLERETTE	4	4				
27	90149–11001	SCREW VIS	20	20				

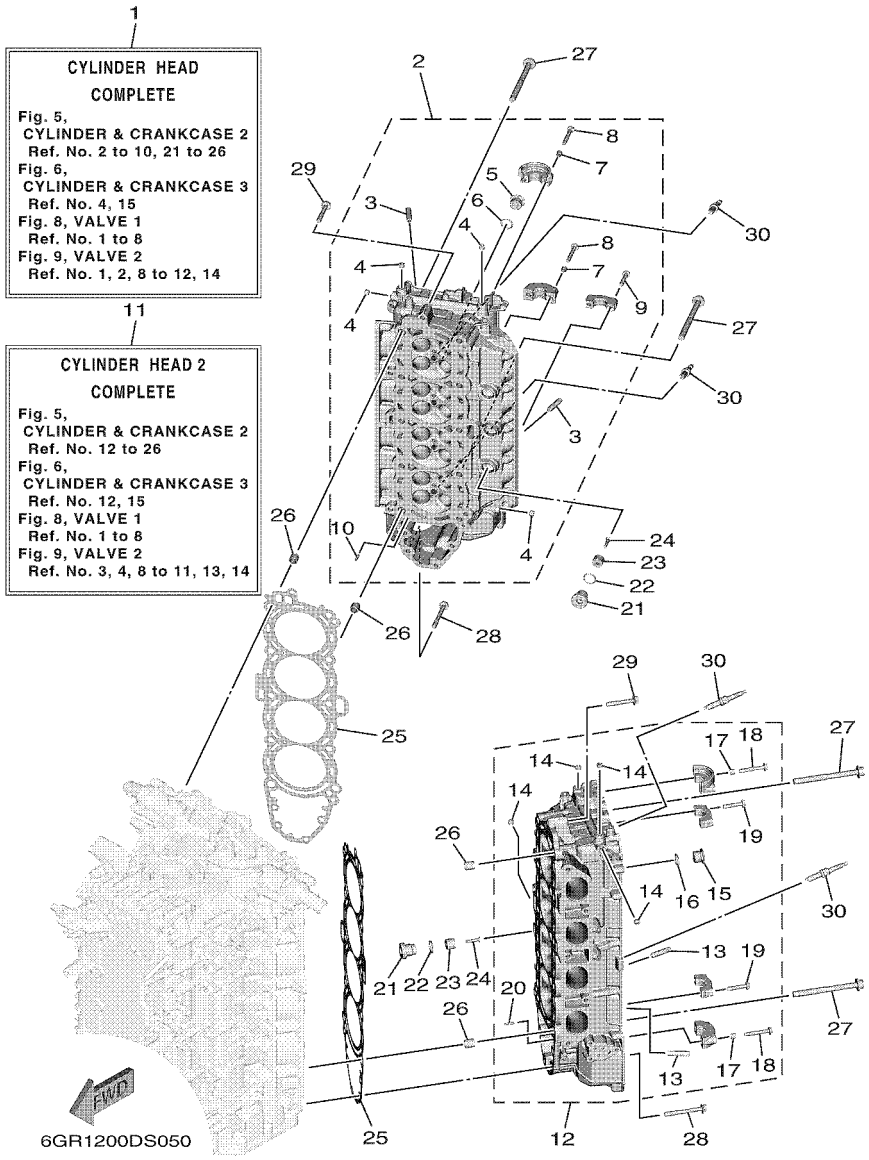

FIG. 5 CYLINDER & CRANKCASE 2 — CYLINDRE & CARTER 2

REF. NO.	PART NO. N° PIECES	DESCRIPTION DESCRIPTION	NS	NS2				REMARKS REMARQUES
28	90105–08220	BOLT, FLANGE BOULON, A COLLERETTE	8	8				
29	90105–08175	BOLT, FLANGE BOULON, A COLLERETTE	2	2				
30	94702–00442	PLUG, SPARK (NGK ILMAR7E9) BOUGIE D,ALLUMAGE (NGK ILMAR7E	8	8				

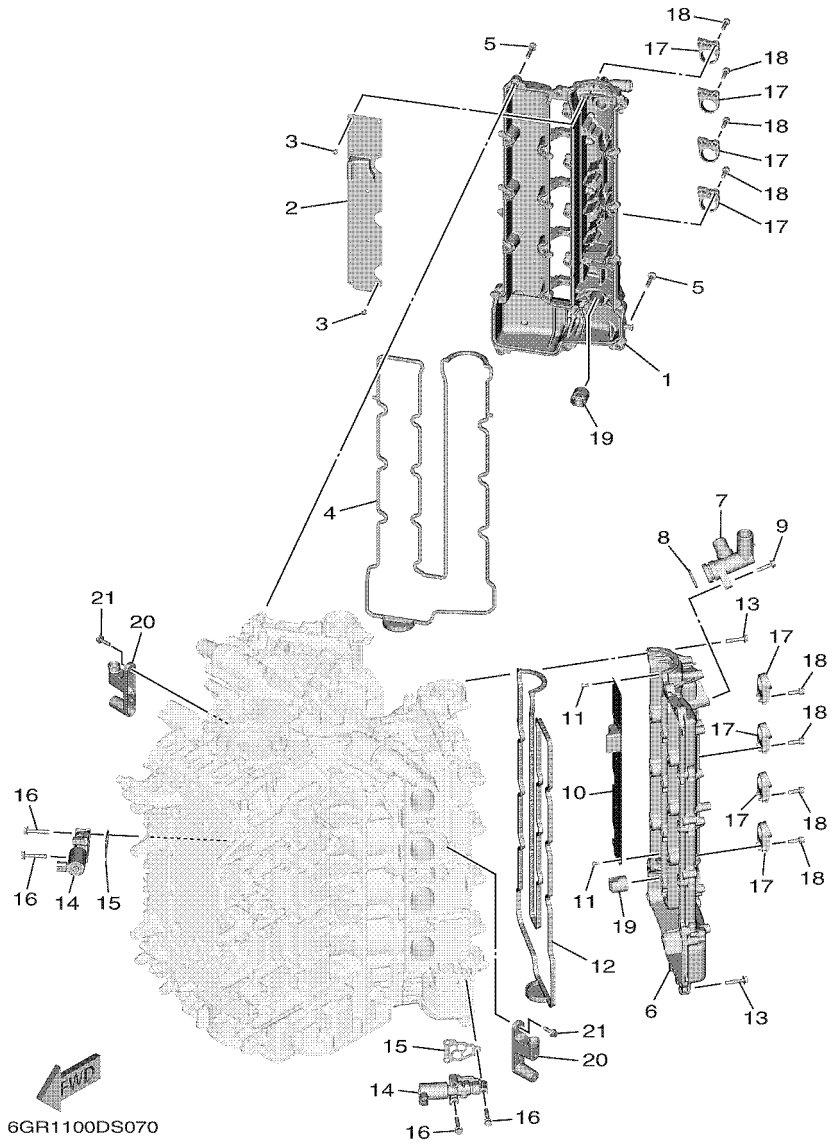

FIG. 6 CYLINDER & CRANKCASE 3 — CYLINDRE & CARTER 3

REF. NO.	PART NO. N° PIECES	DESCRIPTION DESCRIPTION	NS	NS2				REMARKS REMARQUES
1	6GR–11191–00–9S	COVER, CYLINDER HEAD 1 COUVERCLE, CULASSE 1	1	1				
2	6GR–11135–00	PLATE, BREATHER 3 PLAQUE, RENIFLARD 3	1	1				
3	97607–04208	SCREW, WITH WASHER VIS, AVEC RONDELLE	8	8				
4	6GR–11193–00	GASKET, HEAD COVER 1 JOINT, COUVERCLE DE CULASSE 1	1	1				
5	95D95–06030	BOLT, FLANGE DEEP RECESS BOULON FIXATION	22	22				
6	6GR–11192–00–9S	COVER, CYLINDER HEAD 2 COUVERCLE, CULASSE 2	1	1				
7	6GR–11372–00	NIPPLE, HOSE RACCORD, TUYAU	1	1				
8	93210–28646	O-RING JOINT TORIQUE	1	1				
9	95D95–06025	BOLT, FLANGE DEEP RECESS BOULON FIXATION	1	1				
10	6GR–11136–00	PLATE, BREATHER 4 PLAQUE, RENIFLARD 4	1	1				
11	97607–04208	SCREW, WITH WASHER VIS, AVEC RONDELLE	8	8				
12	6GR–11194–00	GASKET, HEAD COVER 2 JOINT, COUVERCLE DE CULASSE 2	1	1				
13	95D95–06030	BOLT, FLANGE DEEP RECESS BOULON FIXATION	22	22				
14	6GR–86120–00	SOLENOID VALVE ASSY SOLENOIDE	2	2				
15	6CB–1242F–00	GASKET, FILTER JOINT, FILTRE	2	2				
16	90105–06035	BOLT, FLANGE BOULON, A COLLERETTE	6	6				
17	6GR–82316–00	BRACKET, IGNITION COIL SUPPORT, BOBINE D'ALLUMAGE	8	8				
18	90110–06038	BOLT, HEXAGON SOCKET HEAD BOULON, TETE HEXAGONALE CREUSE	16	16				
19	6GR–11927–00	LIFTER POUSSOIR	2	2				
20	6GR–42743–00	BRACKET SUPPORT	2	2				
21	95D95–06020	BOLT, FLANGE DEEP RECESS BOULON FIXATION	4	4				

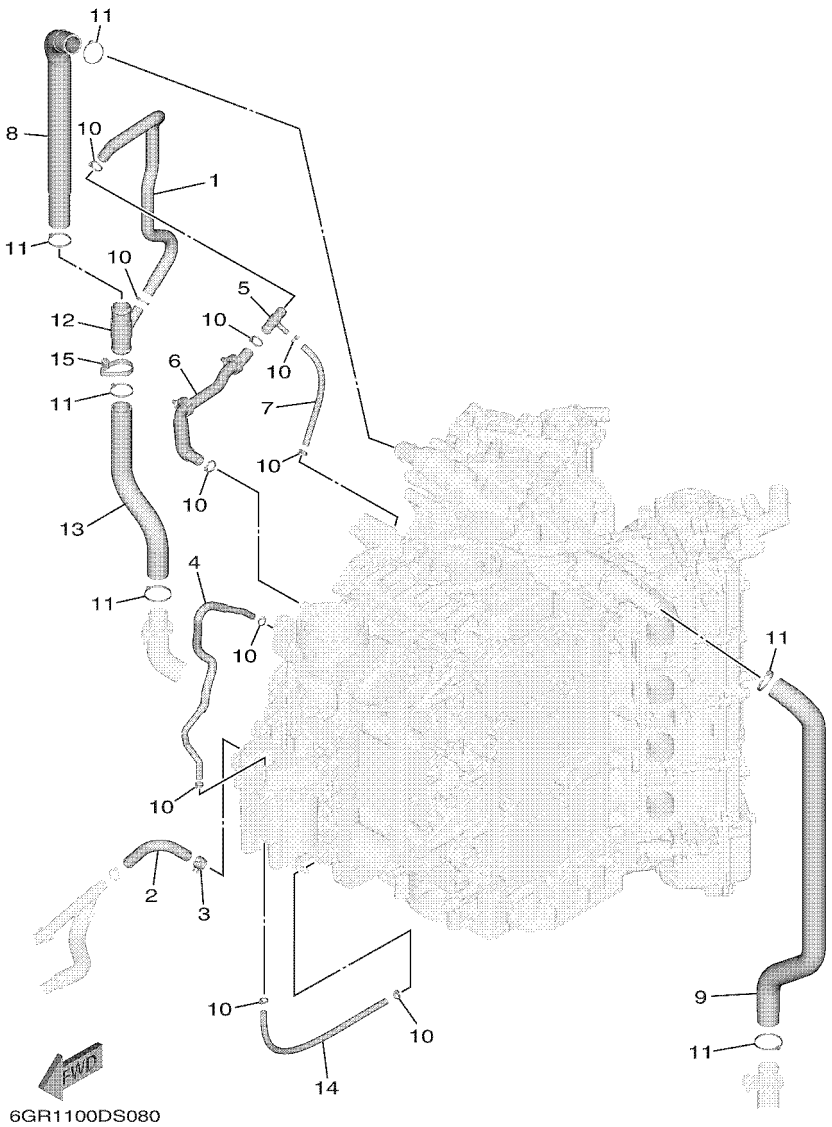

FIG. 7 CYLINDER & CRANKCASE 4 — CYLINDRE & CARTER 4

REF. NO.	PART NO. N° PIECES	DESCRIPTION DESCRIPTION	NS	NS2				REMARKS REMARQUES
1	6GR–1244J–00	HOSE 6 DURITE 6	1	1				
2	6GR–42541–00	PIPE 1 TUYAU 1	1	1				
3	90467–150A5	CLIP JONC	1	1				
4	90445–09048	HOSE (L400) DURITE (L400)	1	1				
5	6GR–24376–00	PIPE, JOINT 1 DURITE 1, RACCORDEMENT	1	1				
6	6GR–12551–00	HOSE 7 DURITE 7	1	1				
7	90445–09M00	HOSE (L180) DURITE (L180)	1	1				
8	6GR–1243A–00	HOSE 1 DURITE 1	1	1				
9	6GR–1243E–00	HOSE 2 DURITE 2	1	1				
10	90465–11M10	CLAMP BRIDE	10	10				
11	90465–11M59	CLAMP BRIDE	6	6				
12	6GR–12594–00	JOINT, HOSE 4 JOINT DE TUYAU 4	1	1				
13	6GR–1244H–00	HOSE 5 DURITE 5	1	1				
14	90445–09304	HOSE (L310) DURITE (L310)	1	1				
15	90465–13M24	CLAMP BRIDE	1	1				

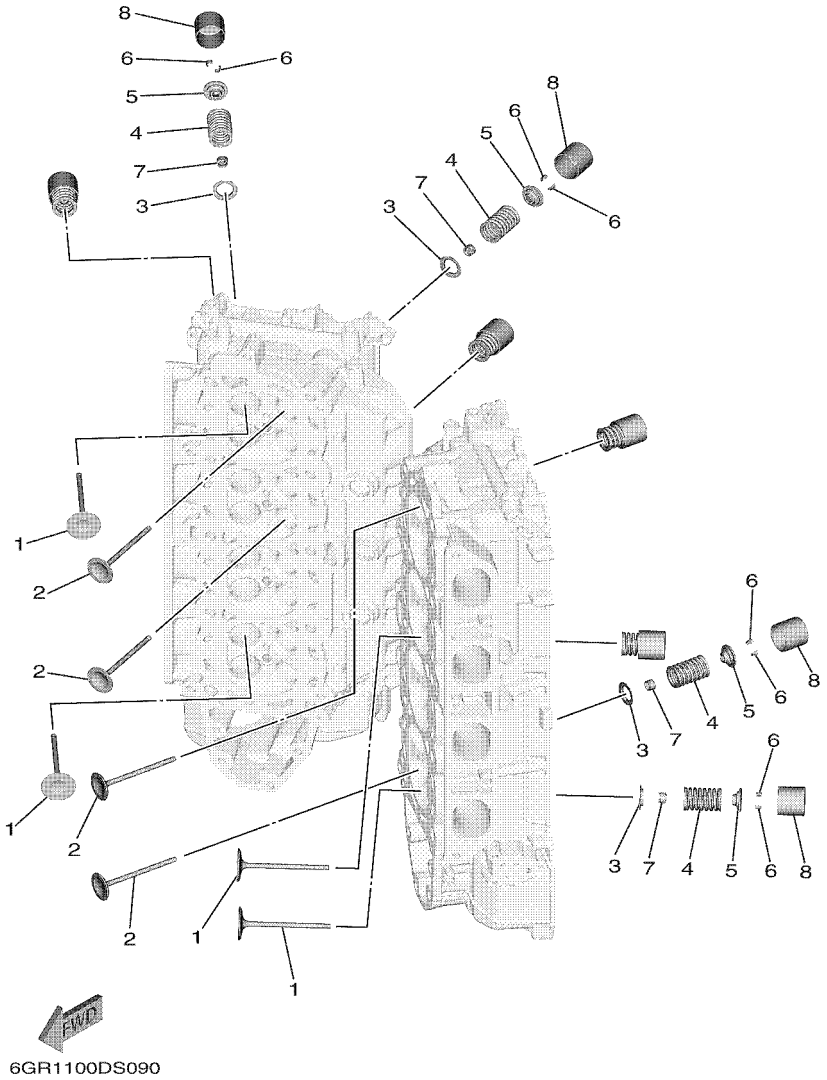

FIG. 8 VALVE 1 — SOUPAPE 1

REF. NO.	PART NO. N° PIECES	DESCRIPTION DESCRIPTION	NS	NS2				REMARKS REMARQUES
1	6GR–12111–00	VALVE, INTAKE SOUPAPE, ADMISSION	16	16				
2	6DX–12121–00	VALVE, EXHAUST SOUPAPE, ECHAPPEMENT	16	16				
3	K0F–A3743–00	SEAT, VALVE SPRING SIEGE, RESSORT DE SOUPAPE	32	32				
4	6CB–12113–00	SPRING, VALVE INNER RESSORT DE SOUPAPE, INTERNE	32	32				
5	K0F–A3741–00	RETAINER, VALVE SPRING BUTEE DE RESSORT DE SOUPAPA	32	32				
6	K0F–A3742–00	LOCK, VALVE SPRING RETAINER FRAISE, SOUPAPE	64	64				
7	51Y–12119–00	SEAL, VALVE STEM JOINT, QUEUE DE SOUPAPE	32	32				
8	6GR–12153–00	LIFTER, VALVE (3.000) LEVE-SOUPAPE (3.000)	32	32				UR UR
	6GR–12153–10	LIFTER, VALVE (3.025) LEVE-SOUPAPE (3.025)	32	32				UR UR
	6GR–12153–20	LIFTER, VALVE (3.050) LEVE-SOUPAPE (3.050)	32	32				UR UR
	6GR–12153–30	LIFTER, VALVE (3.075) LEVE-SOUPAPE (3.075)	32	32				UR UR
	6GR–12153–40	LIFTER, VALVE (3.100) LEVE-SOUPAPE (3.100)	32	32				UR UR
	6GR–12153–50	LIFTER, VALVE (3.120) LEVE-SOUPAPE (3.120)	32	32				UR UR
	6GR–12153–60	LIFTER, VALVE (3.140) LEVE-SOUPAPE (3.140)	32	32				UR UR
	6GR–12153–70	LIFTER, VALVE (3.160) LEVE-SOUPAPE (3.160)	32	32				UR UR
	6GR–12153–80	LIFTER, VALVE (3.180) LEVE-SOUPAPE (3.180)	32	32				UR UR
	6GR–12153–90	LIFTER, VALVE (3.200) LEVE-SOUPAPE (3.200)	32	32				UR UR
	6GR–12153–A0	LIFTER, VALVE (3.220) LEVE-SOUPAPE (3.220)	32	32				UR UR
	6GR–12153–B0	LIFTER, VALVE (3.240) LEVE-SOUPAPE (3.240)	32	32				UR UR
	6GR–12153–C0	LIFTER, VALVE (3.260) LEVE-SOUPAPE (3.260)	32	32				UR UR
	6GR–12153–D0	LIFTER, VALVE (3.280) LEVE-SOUPAPE (3.280)	32	32				UR UR
	6GR–12153–E0	LIFTER, VALVE (3.300) LEVE-SOUPAPE (3.300)	32	32				UR UR
	6GR–12153–F0	LIFTER, VALVE (3.320) LEVE-SOUPAPE (3.320)	32	32				UR UR
	6GR–12153–G0	LIFTER, VALVE (3.340) LEVE-SOUPAPE (3.340)	32	32				UR UR
	6GR–12153–H0	LIFTER, VALVE (3.360) LEVE-SOUPAPE (3.360)	32	32				UR UR
	6GR–12153–J0	LIFTER, VALVE (3.380) LEVE-SOUPAPE (3.380)	32	32				UR UR
	6GR–12153–K0	LIFTER, VALVE (3.400) LEVE-SOUPAPE (3.400)	32	32				UR UR

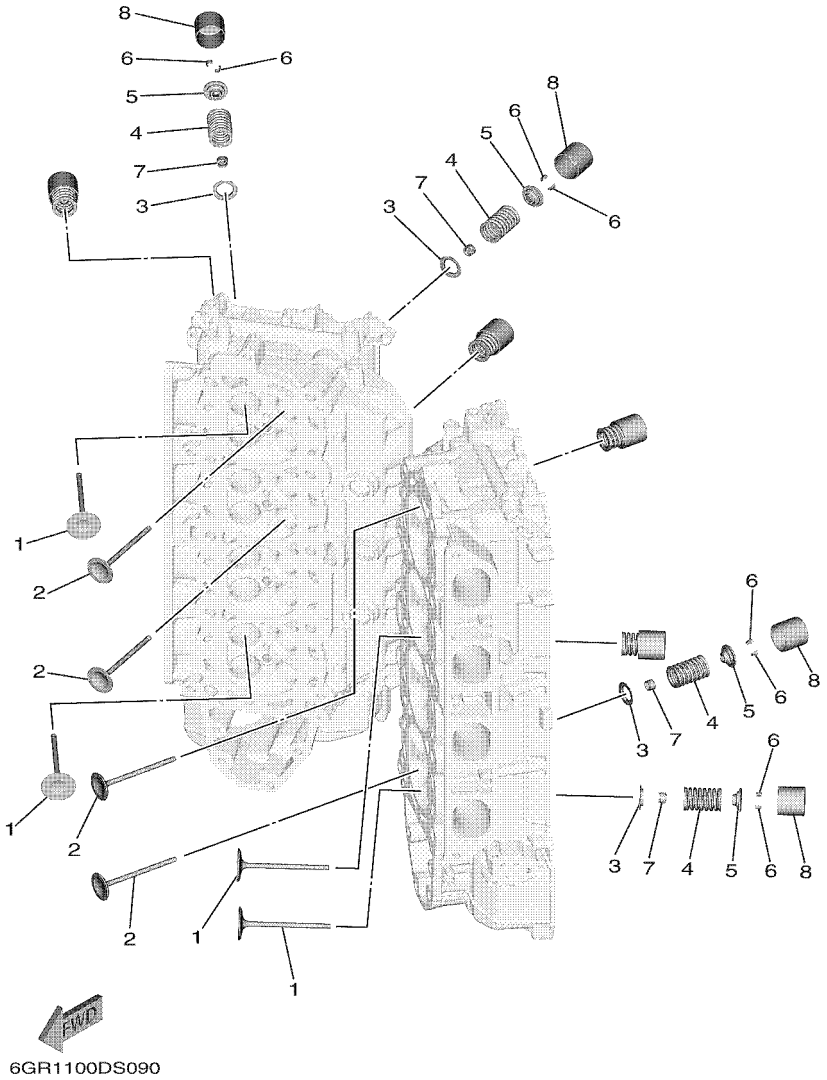

6GR1100DS090

FIG. 8 VALVE 1 — SOUPAPE 1

REF. NO.	PART NO. N° PIECES	DESCRIPTION DESCRIPTION	NS	NS2				REMARKS REMARQUES
8	6GR–12153–L0	LIFTER, VALVE (3.420) LEVE-SOUPAPE (3.420)	32	32				UR UR
	6GR–12153–M0	LIFTER, VALVE (3.440) LEVE-SOUPAPE (3.440)	32	32				UR UR
	6GR–12153–N0	LIFTER, VALVE (3.460) LEVE-SOUPAPE (3.460)	32	32				UR UR
	6GR–12153–P0	LIFTER, VALVE (3.480) LEVE-SOUPAPE (3.480)	32	32				UR UR
	6GR–12153–R0	LIFTER, VALVE (3.500) LEVE-SOUPAPE (3.500)	32	32				UR UR
	6GR–12153–S0	LIFTER, VALVE (3.520) LEVE-SOUPAPE (3.520)	32	32				UR UR
	6GR–12153–T0	LIFTER, VALVE (3.540) LEVE-SOUPAPE (3.540)	32	32				UR UR
	6GR–12145–00	LIFTER, VALVE (3.560) LEVE-SOUPAPE (3.560)	32	32				UR UR
	6GR–12145–10	LIFTER, VALVE (3.580) LEVE-SOUPAPE (3.580)	32	32				UR UR
	6GR–12145–20	LIFTER, VALVE (3.600) LEVE-SOUPAPE (3.600)	32	32				UR UR
	6GR–12145–30	LIFTER, VALVE (3.625) LEVE-SOUPAPE (3.625)	32	32				UR UR
	6GR–12145–40	LIFTER, VALVE (3.650) LEVE-SOUPAPE (3.650)	32	32				UR UR
	6GR–12145–50	LIFTER, VALVE (3.675) LEVE-SOUPAPE (3.675)	32	32				UR UR
	6GR–12145–60	LIFTER, VALVE (3.700) LEVE-SOUPAPE (3.700)	32	32				UR UR

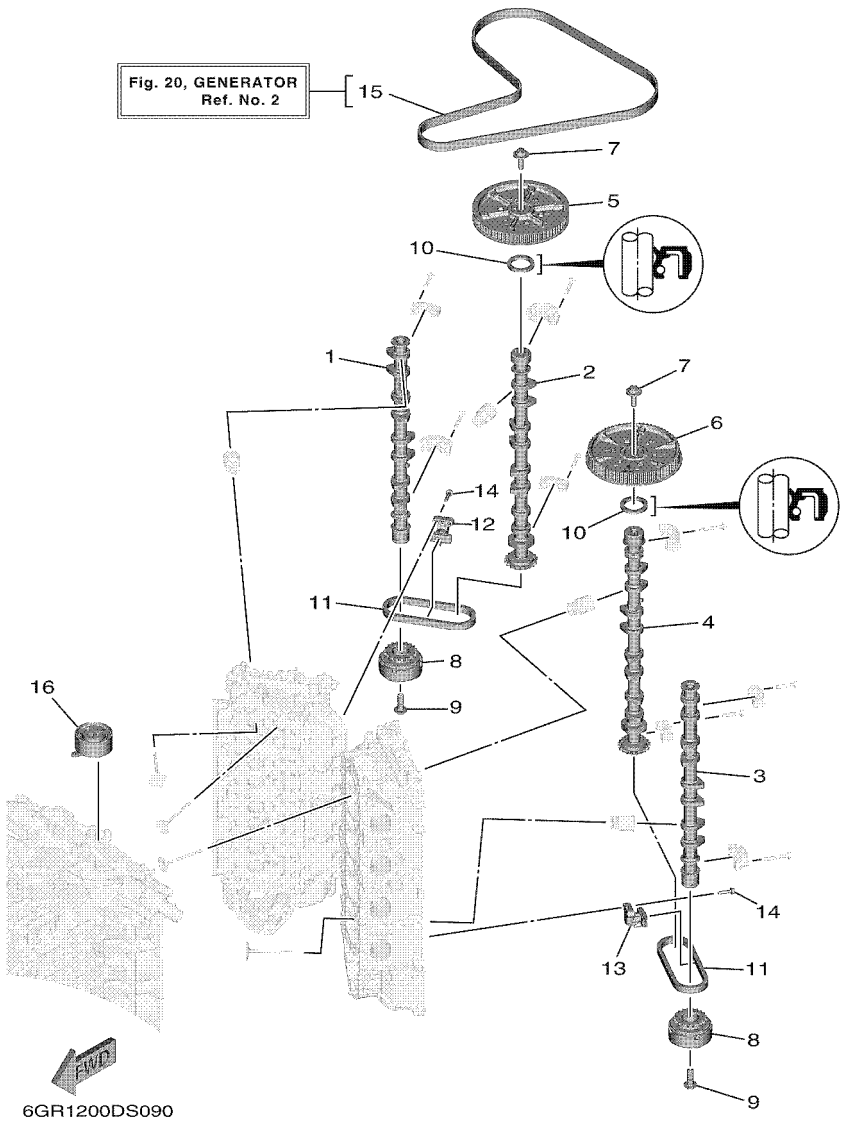

FIG. 9 VALVE 2 — SOUPAPE 2

REF. NO.	PART NO. N° PIECES	DESCRIPTION DESCRIPTION	NS	NS2				REMARKS REMARQUES
1	6GR–12171–00	CAMSHAFT 1 ARBRE A CAMES 1	1	1				
2	6GR–12181–00	CAMSHAFT 2 ARBRE A CAMES 2	1	1				
3	6GR–12172–00	CAMSHAFT 3 ARBRE A CAMES 3	1	1				
4	6GR–12182–00	CAMSHAFT 4 ARBRE A CAMES 4	1	1				
5	6GR–115A0–00	DRIVEN GEAR ASSY CLOCHE D'EMBRAYAGE	1	1				
6	6GR–11567–00	GEAR, DRIVEN 2 PIGNON SECONDAIRE 2	1	1				
7	90119–10050	BOLT, WITH WASHER BOULON, AVEC RONDELLE	2	2				
8	6GR–12645–00	PULLEY ASSY 1 POULIE COMPLET 1	2	2				
9	90401–12002	BOLT, UNION BOULON, RACCORD	2	2				
10	93102–38008	OIL SEAL JOINT SPY	2	2				
11	94581–99044	CHAIN CHAINE	2	2				
12	6GR–12210–00	TENSIONER ASSY, CAM CHAIN TENDEUR DE CHAINE DISTRIBUTION	1	1				
13	6GR–12230–00	TENSIONER ASSY, CAM CHAIN 2 TENDEUR DE CHAINE DISTRIBUTION	1	1				
14	90105–06037	BOLT, FLANGE BOULON, A COLLERETTE	4	4				
15	6GR–W4624–00	BELT (WITH ROTOR BOLTS) COURROIE (AVEC BOULON)	1	1				
16	6P2–11590–02	TENSIONER ASSY TENDEUR (ENS.)	1	1				

FIG. 10 INTAKE — ADMISSION

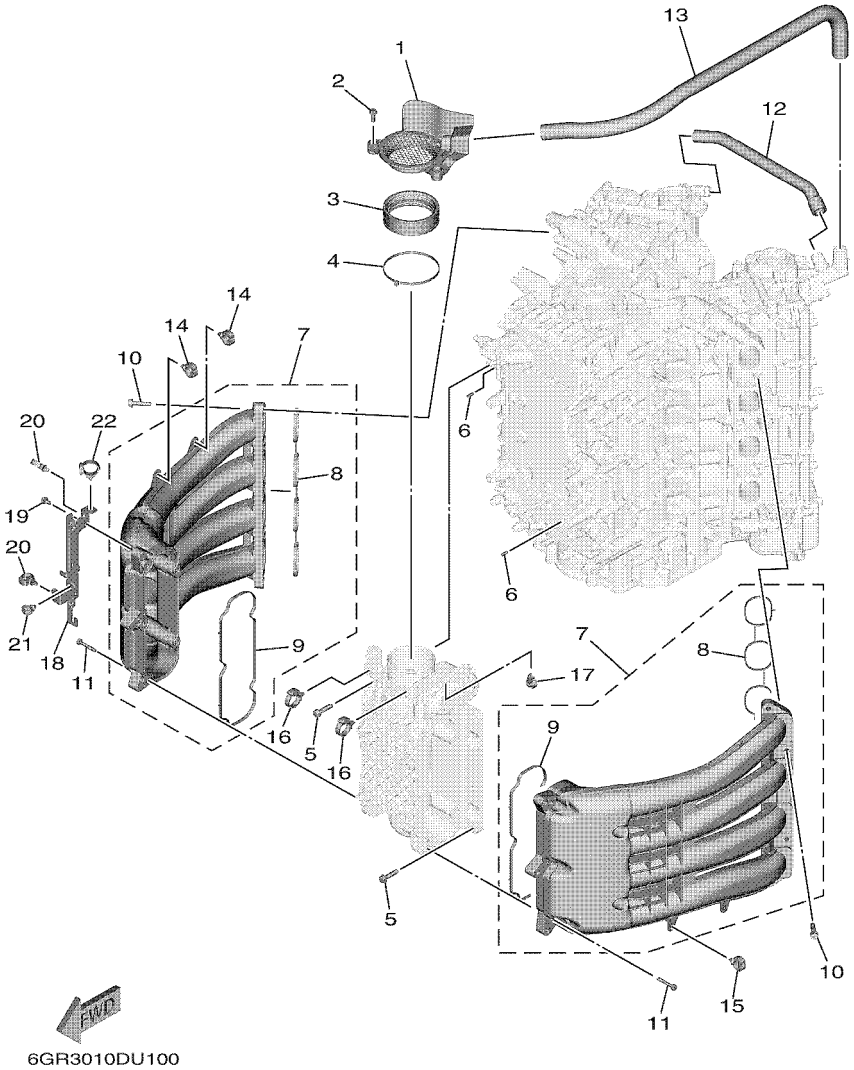

REF. NO.	PART NO. N° PIECES	DESCRIPTION DESCRIPTION	NS	NS2				REMARKS REMARQUES
1	6GR–14440–00	SILENCER ASSY, INTAKE SIENCIEUX D'ADMISSION	1	1				
2	95D95–06025	BOLT, FLANGE DEEP RECESS BOULON FIXATION	2	2				
3	6AW–1441J–01	PIPE, SILENCER DURITE, DE SILENCIEUX	1	1				
4	90464–99004	CLAMP BRIDE	1	1				
5	90119–08022	BOLT, WITH WASHER BOULON, AVEC RONDELLE	6	6				
6	91690–50014	PIN, SPRING AGRAFFE	2	2				
7	6GR–13641–00	MANIFOLD, INTAKE 1 TUBULURE, ADMISSION 1	2	2				
8	6GR–13645–00	.GASKET, MANIFOLD 1 .JOINT, TUBULURE 1	1	1				
9	6GR–13646–00	.GASKET, MANIFOLD 2 .JOINT, TUBULURE 2	1	1				
10	90119–08022	BOLT, WITH WASHER BOULON, AVEC RONDELLE	10	10				
11	90119–06MA6	BOLT, WITH WASHER BOULON, AVEC RONDELLE	10	10				
12	6GR–1531A–00	HOSE, BREATHER 1 DURITE DE RENIFLARD 1	1	1				
13	6GR–1531A–10	HOSE, BREATHER 1 DURITE DE RENIFLARD 1	1	1				
14	90464–20181	CLAMP BRIDE	2	2				
15	90464–20181	CLAMP BRIDE	1	1				
16	90464–12183	CLAMP BRIDE	2	2				
17	90464–13249	CLAMP BRIDE	1	1				
18	6GR–8257G–00	CLAMP, CORD COLLIER, CORDON	1	1				
19	95D95–06012	BOLT, FLANGE DEEP RECESS BOULON FIXATION	2	2				
20	90464–20181	CLAMP BRIDE	2	2				
21	90464–13249	CLAMP BRIDE	1	1				
22	90464–12183	CLAMP BRIDE	1	1				

FIG. 11 THROTTLE BODY ASSY — CARTER D'ACCELERATEUR

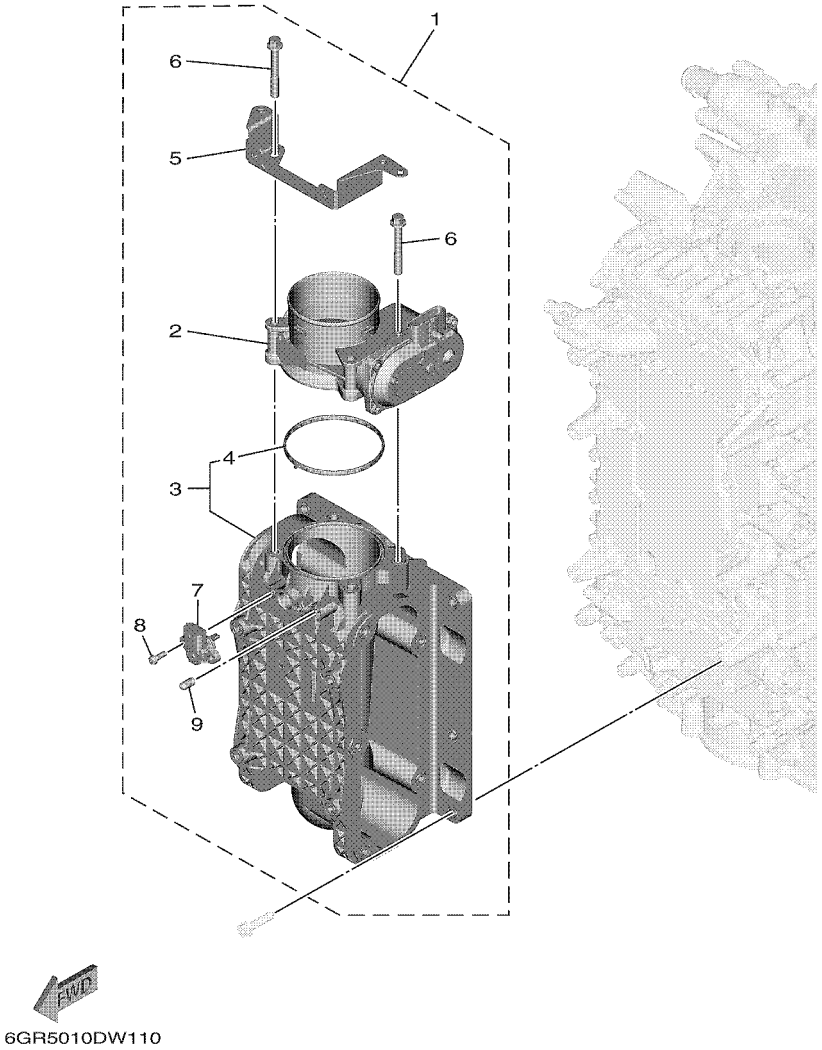

REF. NO.	PART NO. N° PIECES	DESCRIPTION DESCRIPTION	NS	NS2				REMARKS REMARQUES
1	6GR–13750–00	THROTTLE BODY ASSY CARTER D'ACCELERATEUR COMPLET	1	1				
2	6GR–13751–00	.BODY, THROTTLE 1 .CARTER 1	1	1				
3	6GR–13711–00	.MIXING BODY .CHAMBRE DE MELANGE	1	1				
4	6GR–13556–00	..GASKET, MANIFOLD ..JOINT, TUBULURE	1	1				
5	6GR–13898–00	.HOLDER .SUPPORT	1	1				
6	90105–08M36	.BOLT, FLANGE .BOULON, A COLLERETTE	4	4				
7	68F–83688–10	.SENSOR ASSY .SONDE (ENS.)	1	1				
8	68V–81147–00	.SCREW 3 .VIS 3	2	2				
9	63P–13643–00	.COVER, MANIFOLD .COUVERCLE, TUBULURE	1	1				

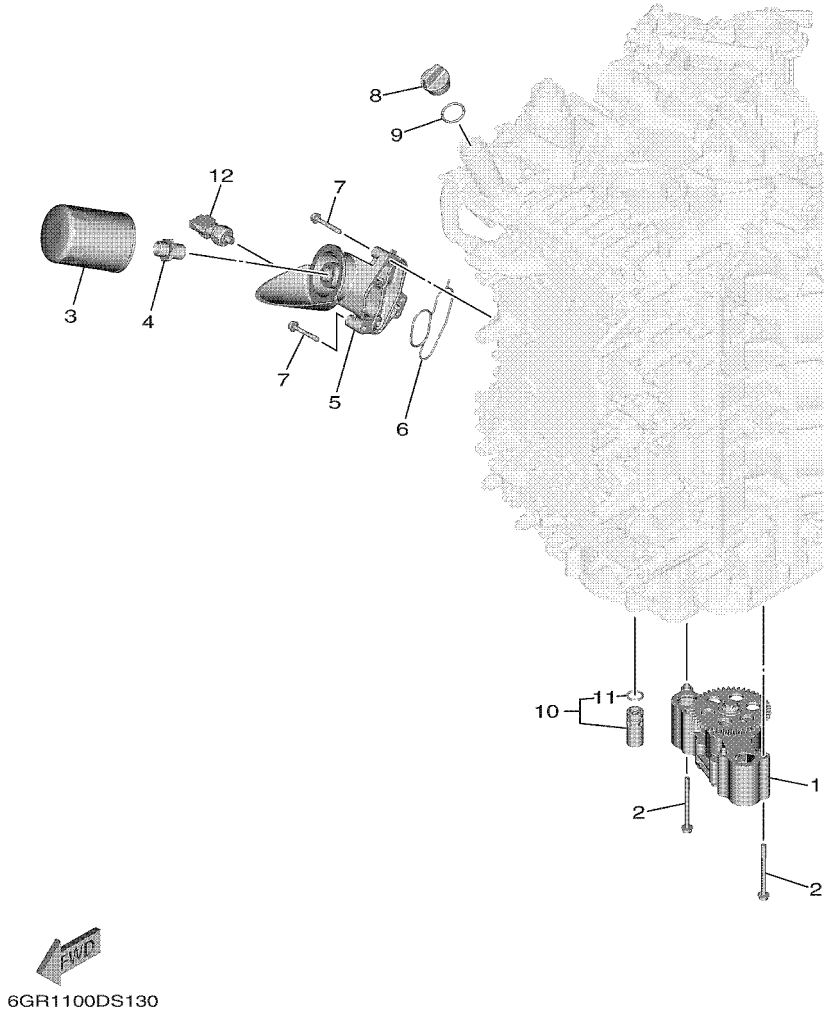

FIG. 12 OIL PUMP — POMPE A HUILE

REF. NO.	PART NO. N° PIECES	DESCRIPTION DESCRIPTION	NS	NS2				REMARKS REMARQUES
1	6GR–13300–01	OIL PUMP ASSY POMPE A HUILE COMPLETE	1	1				
2	95817–06075	BOLT, FLANGE BOULON, A COLLERETTE	4	4				
3	N26–13440–03	ELEMENT ASSY, OIL CLEANER ELEMENT, FILTRE A HUILE	1	1				
4	90401–19001	BOLT, UNION BOULON, RACCORD	1	1				
5	6GR–13446–00	CONNECTOR CONNECTEUR	1	1				
6	6GR–13477–00	GASKET JOINT	1	1				
7	90105–06151	BOLT, FLANGE BOULON, A COLLERETTE	3	3				
8	6G8–15363–00	PLUG, OIL PLOT, HUILE	1	1				
9	93210–24M79	O-RING JOINT TORIQUE	1	1				
10	6GR–13490–00	RELIEF VALVE ASSY SOUPAPE DE SECURITE COMPLET	1	1				
11	6GR–13473–00	.O-RING .JOINT TORIQUE	1	1				
12	6AW–83651–01	SENDER, OIL PRESSURE RACCORD, PRESSION D'HUILE	1	1				

FIG. 13 EXHAUST 1 — ECHAPPEMENT 1

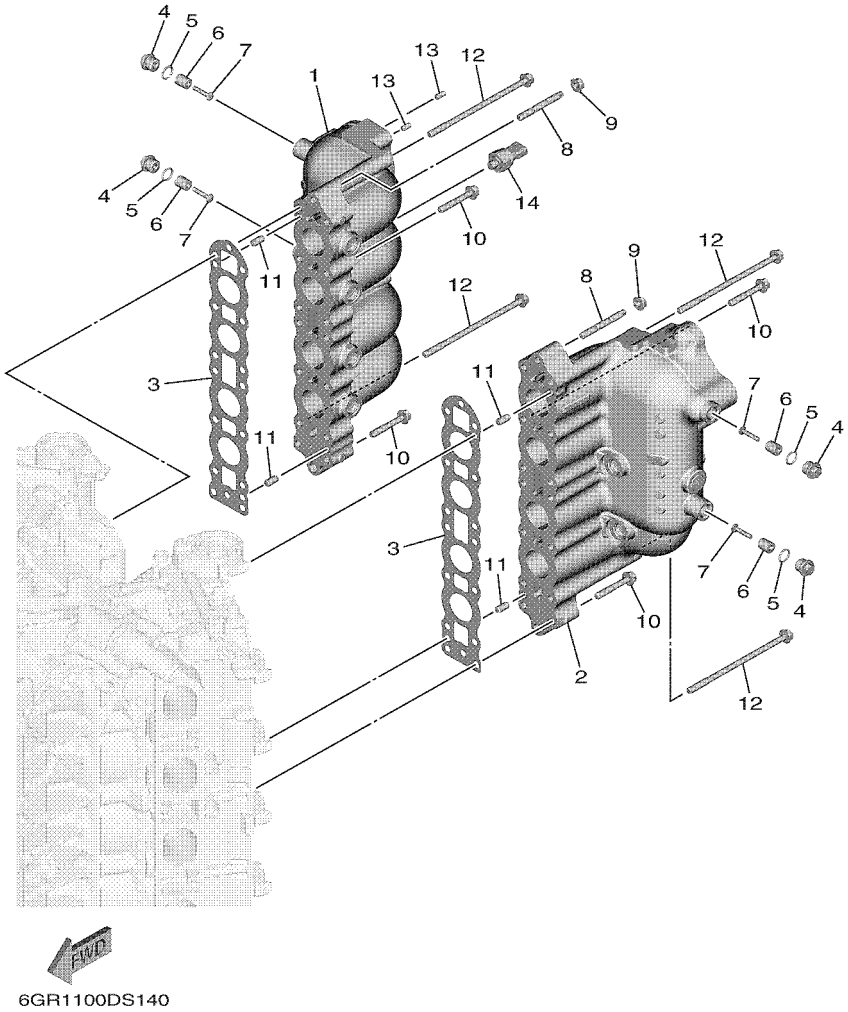

REF. NO.	PART NO. N° PIECES	DESCRIPTION DESCRIPTION	NS	NS2				REMARKS REMARQUES
1	6GR–14615–01–9S	JOINT, EXHAUST 1 JOINT D'ECHAPPEMENT	1	1				
2	6GR–14625–01–9S	JOINT, EXHAUST 2 JOINT D'ECHAPPEMENT	1	1				
3	6GR–14613–00	GASKET, EXHAUST PIPE JOINT DE COUDE D'ECHAPPEMENT	2	2				
4	6G8–11197–A0	PLUG, BLIND PLOT, BORGNE	4	4				
5	93210–13M63	O-RING JOINT TORIQUE	4	4				
6	6G8–11325–00	ANODE ANODE	4	4				
7	98980–05025	SCREW, BIND VIS, DE PRESSION	4	4				
8	90116–08037	BOLT, STUD GOUJON	4	4				
9	90179–08M34	NUT ECROU	4	4				
10	90105–08175	BOLT, FLANGE BOULON, A COLLERETTE	14	14				
11	93608–16M16	PIN, DOWEL AXE	4	4				
12	90105–08266	BOLT, FLANGE BOULON, A COLLERETTE	12	12				
13	93606–12019	PIN, DOWEL GOUPILLE	2	2				
14	6GR–8366B–00	SENSOR, WATER PRESSURE SONDE DE PRESSION D'EAU	1	1				

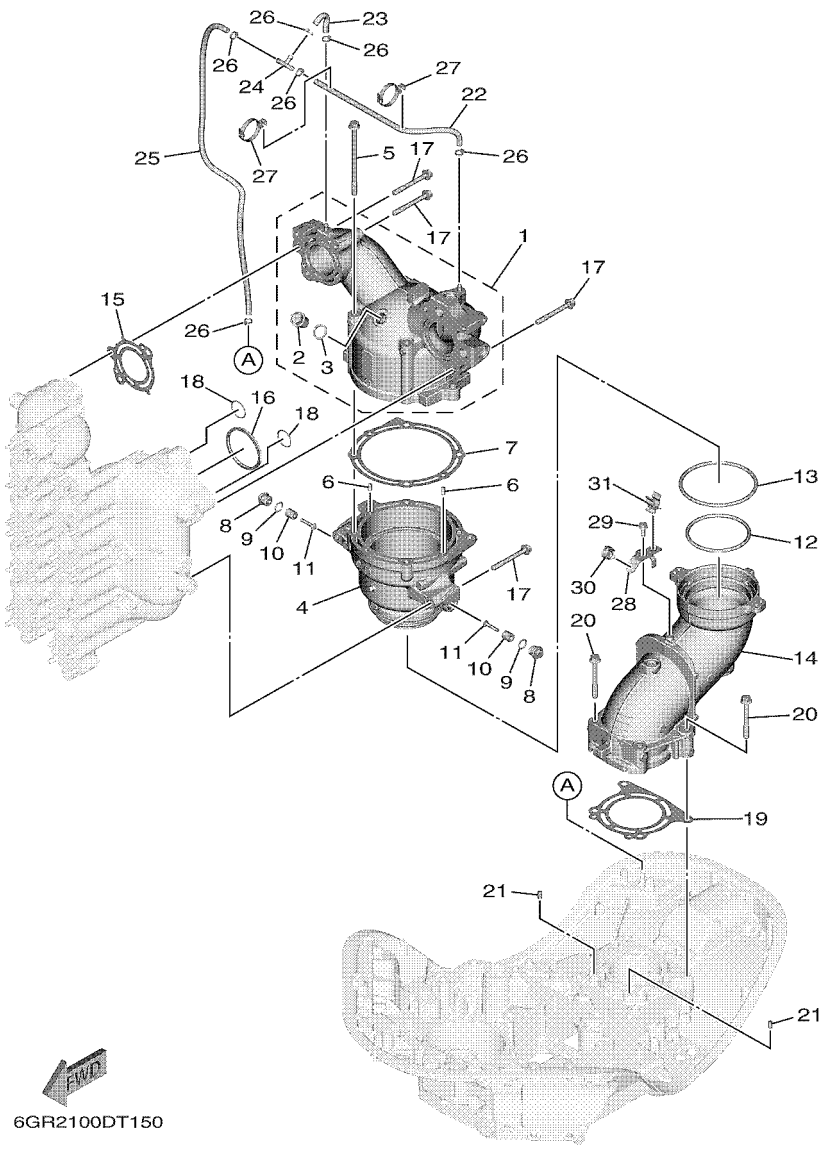

FIG. 14 EXHAUST 2 — ECHAPPEMENT 2

REF. NO.	PART NO. N° PIECES	DESCRIPTION DESCRIPTION	NS	NS2				REMARKS REMARQUES
1	6GR–14635–00–9S	JOINT, EXHAUST 3 JOINT, ECHAPPEMENT 3	1	1				
2	90340–18M09	.PLUG, STRAIGHT SCREW .PLOT, FILETE DROIT	1	1				
3	90201–186F1	.WASHER, PLATE .RONDELLE, PLATE	1	1				
4	6GR–14645–00–9S	JOINT, EXHAUST 4 CALE, AXE DE KICK	1	1				
5	90105–08268	BOLT, FLANGE BOULON, A COLLERETTE	4	4				
6	93606–12019	PIN, DOWEL GOUPILLE	2	2				
7	6GR–41124–00	GASKET, EXHAUST OUTER COVER JOINT, COUVERCLE D'ECHAPPEMENT	1	1				
8	6G8–11197–A0	PLUG, BLIND PLOT, BORGNE	2	2				
9	93210–13M63	O-RING JOINT TORIQUE	2	2				
10	6G8–11325–00	ANODE ANODE	2	2				
11	98980–05025	SCREW, BIND VIS, DE PRESSION	2	2				
12	93210–90001	O-RING JOINT TORIQUE	1	1				
13	93211–10001	O-RING JOINT TORIQUE	1	1				
14	6GR–14656–00–9S	JOINT, EXHAUST 5 JOINT, ECHAPPEMENT 5	1	1				
15	6GR–41114–00	GASKET, EXHAUST OUTER COVER JOINT, COUVERCLE D'ECHAPPEMENT	1	1				
16	6GR–14643–00	GASKET 3 JOINT 3	1	1				
17	90105–08220	BOLT, FLANGE BOULON, A COLLERETTE	7	7				
18	93210–26003	O-RING JOINT TORIQUE	2	2				
19	6GR–41134–00	GASKET, EXHAUST MANIFOLD JOINT, PIPE D'ECHAPPEMENT	1	1				
20	90105–08220	BOLT, FLANGE BOULON, A COLLERETTE	4	4				
21	93606–12019	PIN, DOWEL GOUPILLE	2	2				
22	90445–09104	HOSE (L300) DURITE (L300)	1	1				
23	6GR–12482–00	PIPE 2 DURITE 2	1	1				
24	688–24378–00	PIPE, JOINT 3 DURITE RACCORDEMENT 3	1	1				
25	90445–09047	HOSE (L630) DURITE (L630)	1	1				
26	90465–11M10	CLAMP BRIDE	6	6				
27	90464–09028	CLAMP BRIDE	2	2				

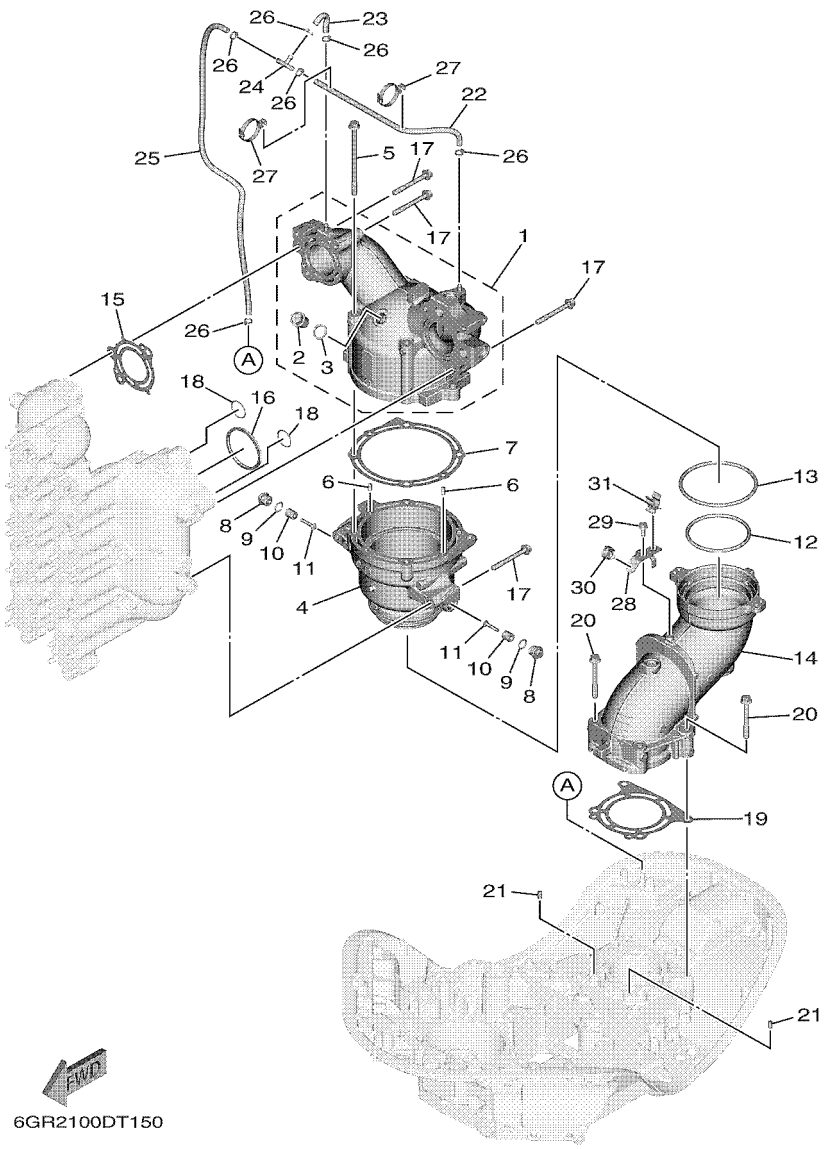

FIG. 14 EXHAUST 2 — ECHAPPEMENT 2

REF. NO.	PART NO. N° PIECES	DESCRIPTION DESCRIPTION	NS	NS2				REMARKS REMARQUES
28	6GR–82588–00	PLATE PLAQUE	1	1				
29	95D95–06016	BOLT, FLANGE DEEP RECESS BOULON FIXATION	1	1				
30	90464–13249	CLAMP BRIDE	1	1				
31	90464–12015	CLAMP BRIDE	1	1				

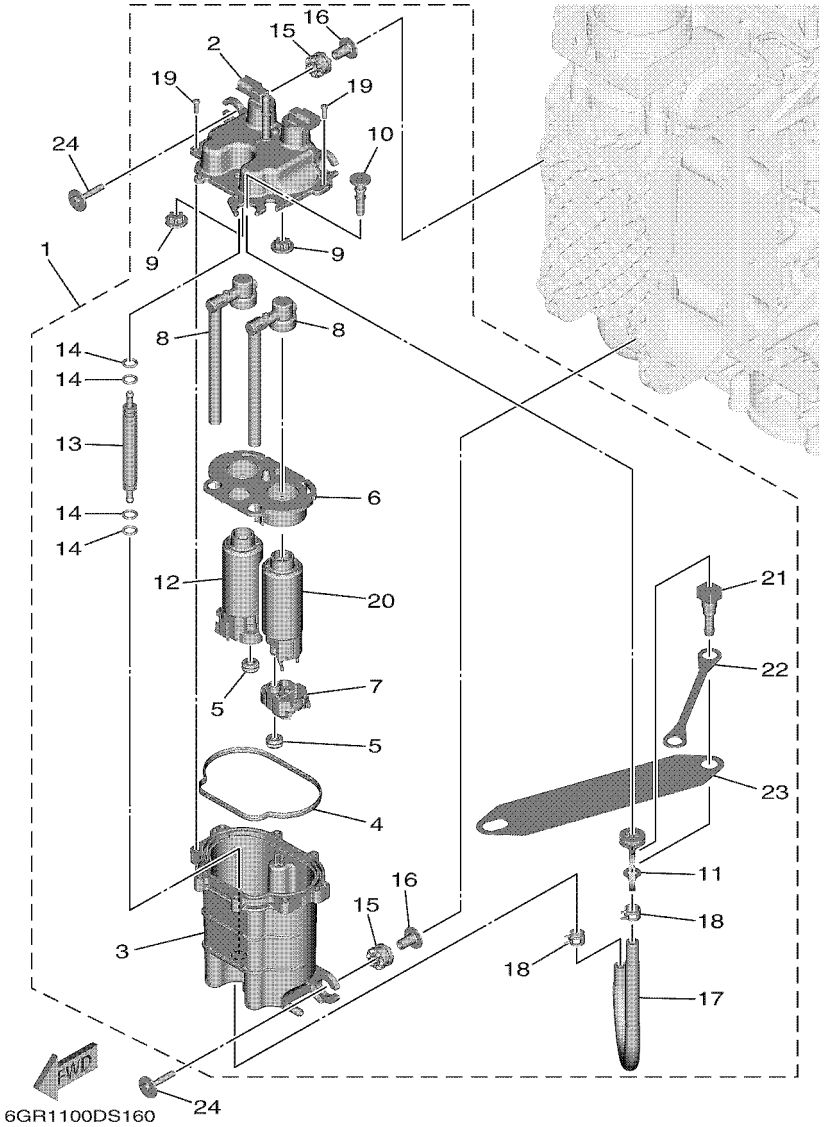

FIG. 15 VAPOR SEPARATOR — VAPEUR SEPARATEUR

REF. NO.	PART NO. N° PIECES	DESCRIPTION DESCRIPTION	NS	NS2				REMARKS REMARQUES
1	6GR–24220–03	FUEL TANK COMP. 2 RESERVOIR A ESSENCE 2	1	1				
2	6GR–24223–00	.COVER, FUEL TANK ASSY .COUVERTURE, RESERVOIR DE CARBU	1	1				
3	6GR–24224–01	.CASE, FUEL TANK ASSY. .CAS, RESERVOIR DE CARBURANT	1	1				
4	6GR–24218–00	.GASKET .JOINT	1	1				
5	6GR–13781–00	.DAMPER, PUMP .AMORTISSEUR, POMPE	2	2				
6	6GR–2441R–00	.PLATE, BAFFLE 1 .SEPARATEUR 1	1	1				
7	6GR–244A1–00	.CASE, PUMP 1 .CARTER DE POMPE 1	1	1				
8	6GR–13938–00	.PIPE .DURITE	2	2				
9	6GR–13593–00	.DAMPER .AMORTISSEUR	2	2				
10	6GR–24196–00	.PLUG, DRAIN .PLOT, VIDANGE	1	1				
11	6GR–2419A–00	.HOLDER .SUPPORT	1	1				
12	6GR–24430–00	.FUEL PUMP ASSY .POMPE A ESSENCE	1	1				
13	6GR–21841–00	.COOLER .RADIATEUR	1	1				
14	6FM–14562–00	.O-RING .JOINT TORIQUE	4	4				
15	6CB–13593–00	.DAMPER .AMORTISSEUR	4	4				
16	6GR–13716–00	.COLLAR .COLLERETTE	4	4				
17	6GR–14197–00	.PIPE .DURITE	1	1				
18	68V–13577–01	.CLIP .AGRAFE	2	2				
19	6GR–14567–00	.SCREW .VIS	8	8				
20	6GR–24420–10	.FUEL PUMP ASSY .POMPE A ESSENCE	1	1				
21	6AW–24300–11	.FUEL PIPE JOINT .DURITE RACCORDEMT. A ESSENCE	1	1				
22	6GR–24113–00	.PLATE, CONNECTING .PLAQUE DE CONNEXION	1	1				
23	6GR–2415H–00	.LABEL, WARNING .ETIQUETTE, AVERTISSEMENT	1	1				
24	90119–06299	BOLT, WITH WASHER BOULON, AVEC RONDELLE	4	4				

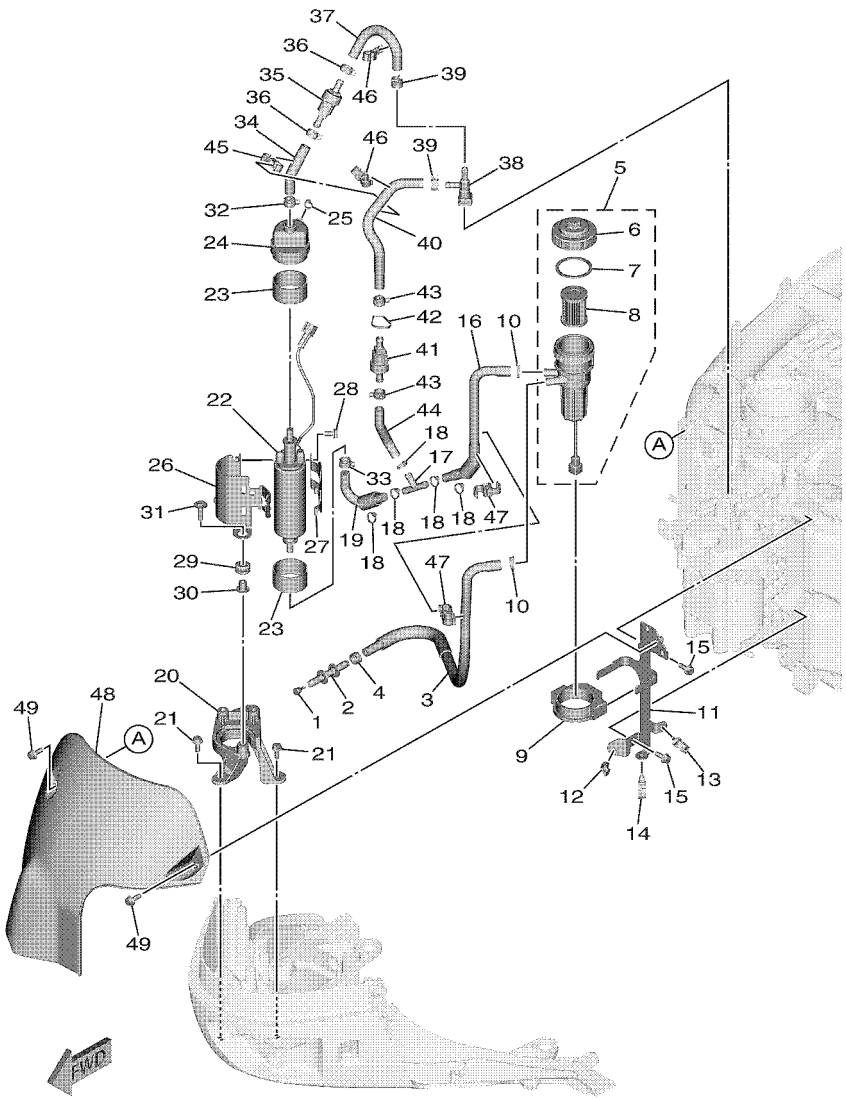

FIG. 16 FUEL 1 — CARBURANT 1

REF. NO.	PART NO. N° PIECES	DESCRIPTION DESCRIPTION	NS	NS2				REMARKS REMARQUES
1	689–85547–01	DAMPER AMORTISSEUR	1	1				
2	6AW–24377–01	PIPE, JOINT 2 DURITE RACCORDEMENT 2	1	1				
3	6GR–24311–00	PIPE, FUEL 1 DURITE A ESSENCE	1	1				
4	6E5–24351–51	BAND 1 COLLIER 1	1	1				
5	6GR–24560–01	FILTER ASSY ENS FILTRE	1	1				
6	6GR–24561–00	.BODY,FILTER .TAMIS, FILTRE	1	1				
7	6P3–24564–00	.GASKET .JOINT	1	1				
8	6P3–24563–02	.ELEMENT, FILTER .ELEMENT, FILTRE	1	1				
9	6GR–24568–01	BAND, FILTER COLLIER, FILTRE	1	1				
10	90465–11M10	CLAMP BRIDE	2	2				
11	6GR–24566–00	BRACKET, FILTER SUPPORT, FILTRE	1	1				
12	90464–11121	CLAMP BRIDE	1	1				
13	90464–13249	CLAMP BRIDE	1	1				
14	90464–18246	CLAMP BRIDE	1	1				
15	95D95–06016	BOLT, FLANGE DEEP RECESS BOULON FIXATION	2	2				
16	6GR–24312–00	PIPE 2 DURITE 2	1	1				
17	6E5–24378–00	PIPE, JOINT 3 DURITE, RACCORDEMENT 3	1	1				
18	90465–11M10	CLAMP BRIDE	5	5				
19	6GR–24321–00	PIPE 10 DURITE 10	1	1				
20	6GR–24425–00	BRACKET, FUEL PUMP 1 SUPPORT, POMPE A ESSENCE 1	1	1				
21	95D95–06016	BOLT, FLANGE DEEP RECESS BOULON FIXATION	3	3				
22	6GR–24410–01	FUEL PUMP ASSY POMPE A ESSENCE	1	1				
23	6DA–24492–01	BUSH, FUEL PUMP BAGUE	2	2				
24	6GR–24462–01	CAP, BLIND COUVERCLE, BORGNE	1	1				
25	90465–11M10	CLAMP BRIDE	1	1				
26	6GR–24491–00	BRACKET, FUEL PUMP SUPPORT, POMPE A ESSENCE	1	1				
27	6GR–24426–00	BRACKET, FUEL PUMP 2 SUPPORT, POMPE A ESSENCE 2	1	1				

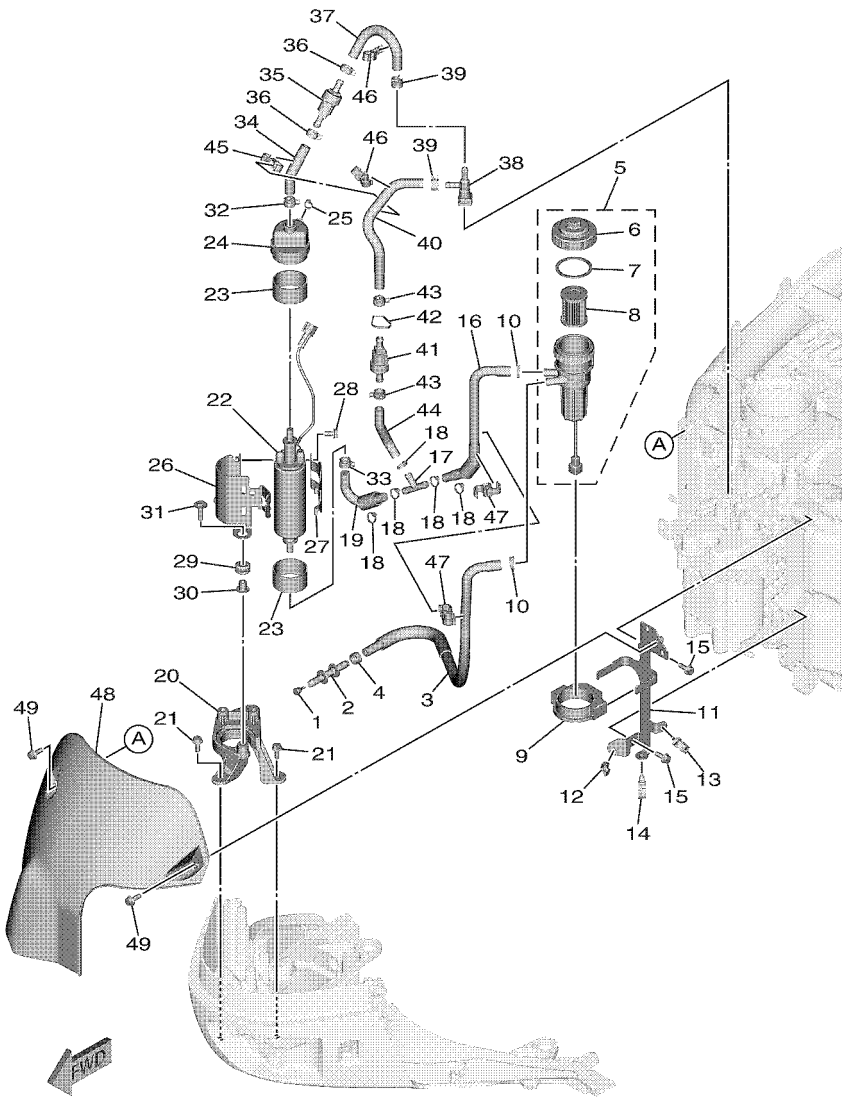

FIG. 16 FUEL 1 — CARBURANT 1

REF. NO.	PART NO. N° PIECES	DESCRIPTION DESCRIPTION	NS	NS2				REMARKS REMARQUES
28	95D95–06012	BOLT, FLANGE DEEP RECESS BOULON FIXATION	2	2				
29	90480–10M23	GROMMET PASSE-FIL	3	3				
30	90387–06289	COLLAR COLLERETTE	3	3				
31	90119–06309	BOLT, WITH WASHER BOULON, AVEC RONDELLE	3	3				
32	90467–140A9	CLIP JONC	1	1				
33	90467–141A2	CLIP JONC	1	1				
34	6GR–24322–00	PIPE 11 DURITE 11	1	1				
35	6R5–24408–10	FUEL FEED ASSY ALIMENT D'ESSENCE	1	1				
36	90467–140A9	CLIP JONC	2	2				
37	6GR–24323–00	PIPE 12 DURITE 12	1	1				
38	6P2–24300–01	FUEL PIPE JOINT DURITE RACCORDEMT. A ESSENCE	1	1				
39	90467–120A7	CLIP JONC	2	2				
40	6GR–24324–00	PIPE 13 DURITE 13	1	1				
41	6GR–24460–20	RELIEF VALVE ASSY SOUPAPE DE SECURITE COMPLET	1	1				
42	90465–13M60	CLAMP BRIDE	1	1				
43	90467–140A9	CLIP JONC	2	2				
44	6GR–24325–00	PIPE 14 DURITE 14	1	1				
45	90464–12009	CLAMP BRIDE	1	1				
46	90464–12010	CLAMP BRIDE	2	2				
47	90464–12009	CLAMP BRIDE	2	2				
48	6GR–24596–01	COVER COUVERCLE	1	1				
49	95D95–06016	BOLT, FLANGE DEEP RECESS BOULON FIXATION	3	3				

FIG. 17 FUEL 2 — CARBURANT 2

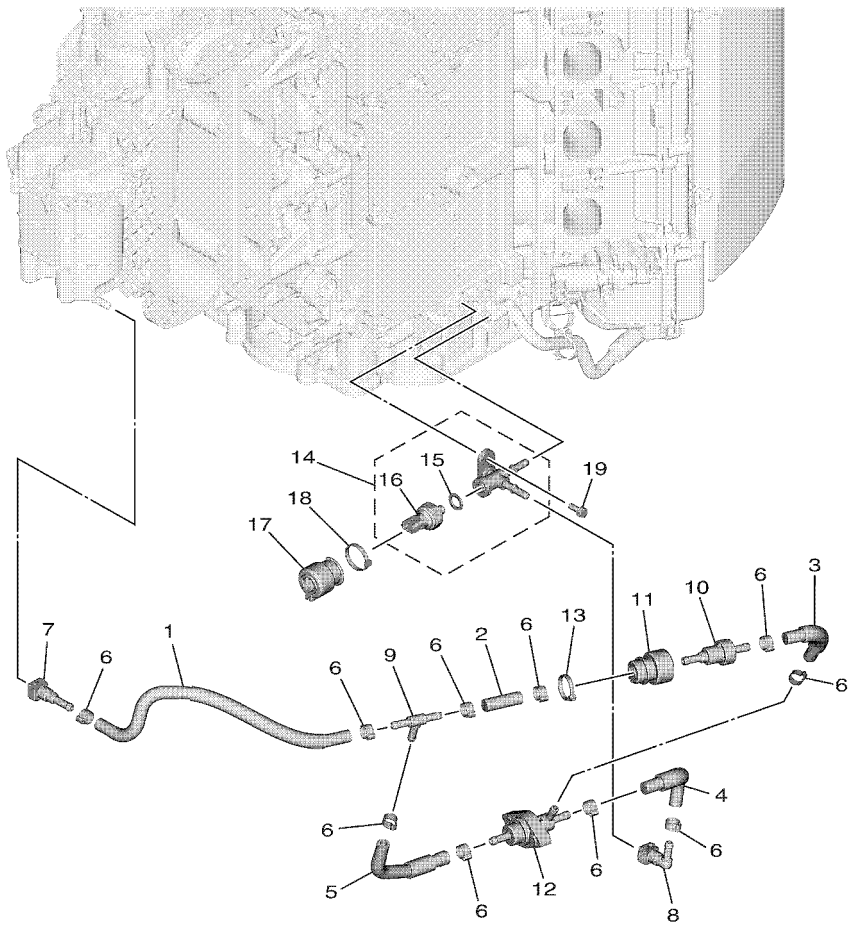

6GR3010DU170

REF. NO.	PART NO. N° PIECES	DESCRIPTION DESCRIPTION	NS	NS2				REMARKS REMARQUES
1	6GR–24313–00	PIPE 3 DURITE 3	1	1				
2	6GR–24314–00	PIPE 4 DURITE 4	1	1				
3	6GR–24315–00	PIPE 5 DURITE 5	1	1				
4	6GR–24316–00	PIPE 6 DURITE 6	1	1				
5	6GR–24317–10	PIPE 7 DURITE 7	1	1				
6	90467–141A1	CLIP JONC	10	10				
7	6AW–24300–11	FUEL PIPE JOINT DURITE RACCORDEMT. A ESSENCE	1	1				
8	6AW–24300–01	FUEL PIPE JOINT DURITE RACCORDEMT. A ESSENCE	1	1				
9	6CB–24461–00	PIPE, JOINT DURITE, RACCORDEMENT	1	1				
10	6GR–24408–01	FUEL FEED ASSY ALIMENT D'ESSENCE	1	1				
11	6GR–24217–00	COVER COUVERCLE	1	1				
12	6GR–24460–01	RELIEF VALVE ASSY SOUPAPE DE SECURITE COMPLET	1	1				
13	90465–13M97	CLAMP BRIDE	1	1				
14	6GR–8A411–00	SENSOR UNIT 1 CAPTEUR UNIT1	1	1				
15	6GR–825A8–00	.SEAL, SENSOR .SEAL, CAPTEUR	1	1				
16	6GR–82421–00	.SENSOR, FUEL PRESSURE .CAPTEUR, PRESSION DE CARBURANT	1	1				
17	6GR–2464E–01	COVER, CAP COUVERCLE	1	1				
18	90465–13M97	CLAMP BRIDE	1	1				
19	97E95–06516	BOLT, HEXAGON W/W DEEP RECESS VIS HEXAGONAL AVC RONDELLE	1	1				

FIG. 18 FUEL 3 — CARBURANT 3

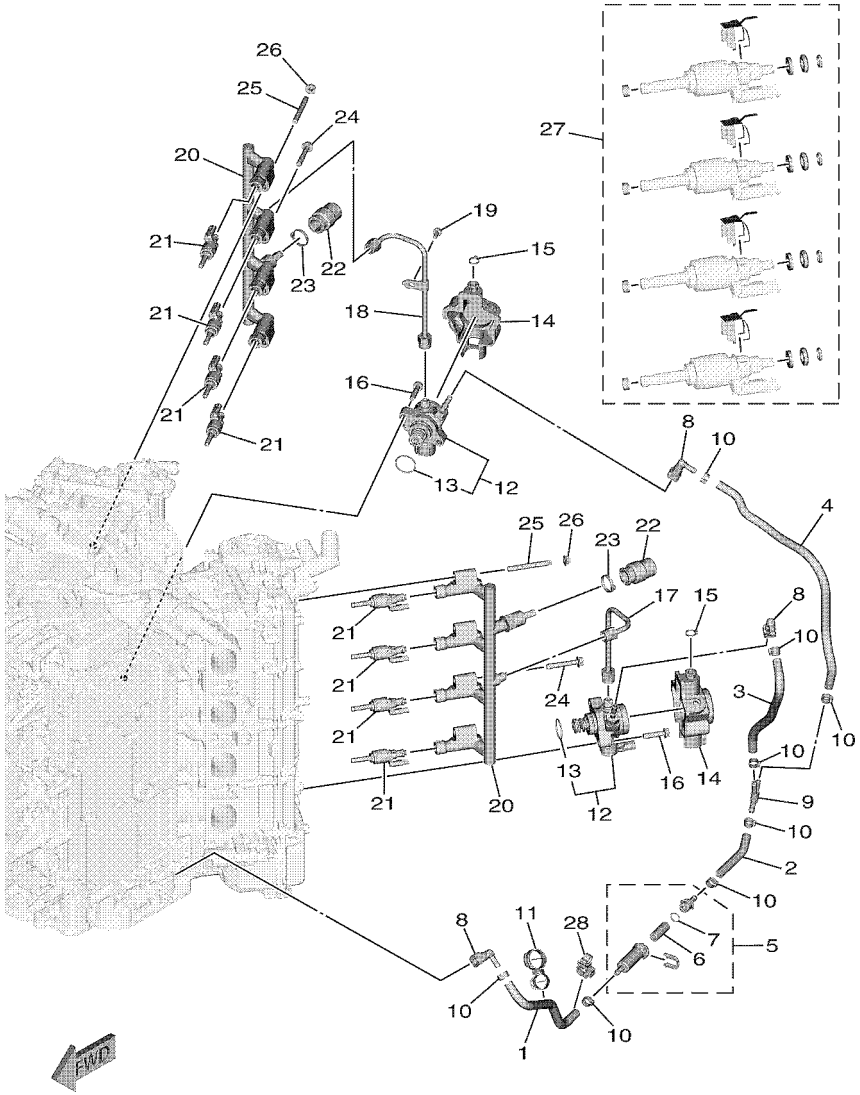

6GR1100DS190

REF. NO.	PART NO. N° PIECES	DESCRIPTION DESCRIPTION	NS	NS2				REMARKS REMARQUES
1	6GR–243A1–00	PIPE 15 DURITE 15	1	1				
2	6GR–243A2–00	PIPE 16 DURITE 16	1	1				
3	6GR–243A3–00	PIPE 17 DURITE 17	1	1				
4	6GR–243A4–00	PIPE 18 DURITE 18	1	1				
5	6GR–24251–00	STRAINER 1 FILTRE 1	1	1				
6	6GR–24501–00	.FILTER, FUEL .FILTRE	1	1				
7	6GR–13016–00	.O-RING .JOINT TORIQUE	1	1				
8	6AW–24300–01	FUEL PIPE JOINT DURITE RACCORDEMT. A ESSENCE	3	3				
9	6CB–24461–00	PIPE, JOINT DURITE, RACCORDEMENT	1	1				
10	90467–141A1	CLIP JONC	8	8				
11	90464–29223	CLAMP BRIDE	1	1				
12	6GR–13910–00	FUEL PUMP ASSY POMPE A ESSENCE COMPLET	2	2				
13	6GR–12439–00	.O-RING .JOINT TORIQUE	1	1				
14	6GR–24595–01	PROTECTOR PROTECTEUR	2	2				
15	90465–11M10	CLAMP BRIDE	2	2				
16	97E95–08535	BOLT, HEXAGON W/W DEEP RECESS VIS HEXAGONAL AVC RONDELLE	4	4				
17	6GR–14295–00	PIPE, FUEL DURITE A ESSENCE	1	1				
18	6GR–14296–00	PIPE, FUEL 2 DURITE A ESSENCE 2	1	1				
19	95D95–06014	BOLT, FLANGE DEEP RECESS BOULON FIXATION	1	1				
20	6GR–13160–09	DELIVERY PIPE ASSY 1 ENS. TUBE DE REFOULEMENT 1	2	2				
21	6GR–13761–00	INJECTOR INJECTEUR	8	8				
22	6GR–24599–01	CAP CAPUCHON	2	2				
23	90465–13M97	CLAMP BRIDE	2	2				
24	90105–08175	BOLT, FLANGE BOULON, A COLLERETTE	4	4				
25	90116–08037	BOLT, STUD GOUJON	4	4				
26	90179–08M34	NUT ECROU	4	4				
27	6GR–W0005–00	O-RING SET JEU DE JOINTS TORIQUE	2	2				

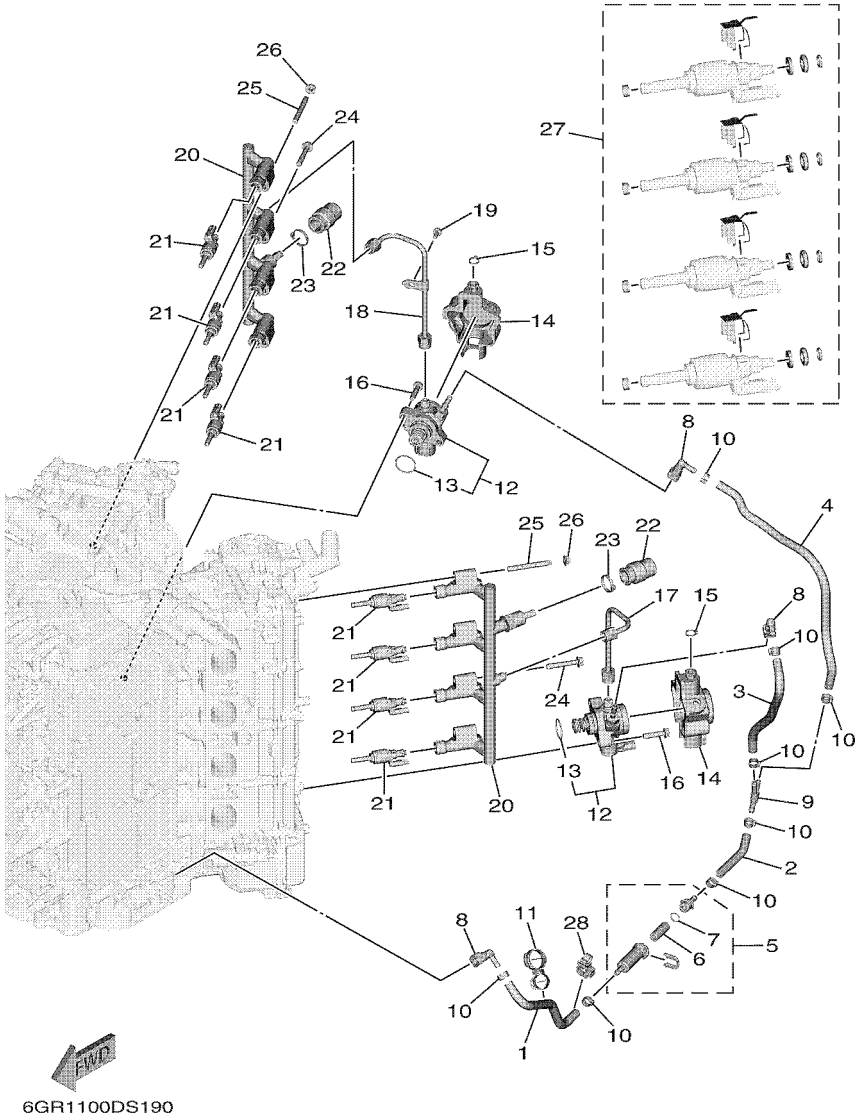

FIG. 18 FUEL 3 — CARBURANT 3

REF. NO.	PART NO. N° PIECES	DESCRIPTION DESCRIPTION	NS	NS2				REMARKS REMARQUES
28	90464–16015	CLAMP BRIDE	1	1				

FIG. 19 FUEL 4 — CARBURANT 4

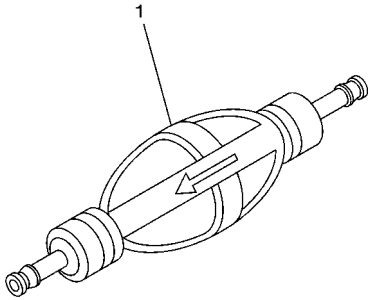

68V9110-J110

REF. NO.	PART NO. N° PIECES	DESCRIPTION DESCRIPTION	NS	NS2				REMARKS REMARQUES
1	6AW–24360–02	PRIMER PUMP ASSY POMPE D'AMORCAGE	1	1				AP AP

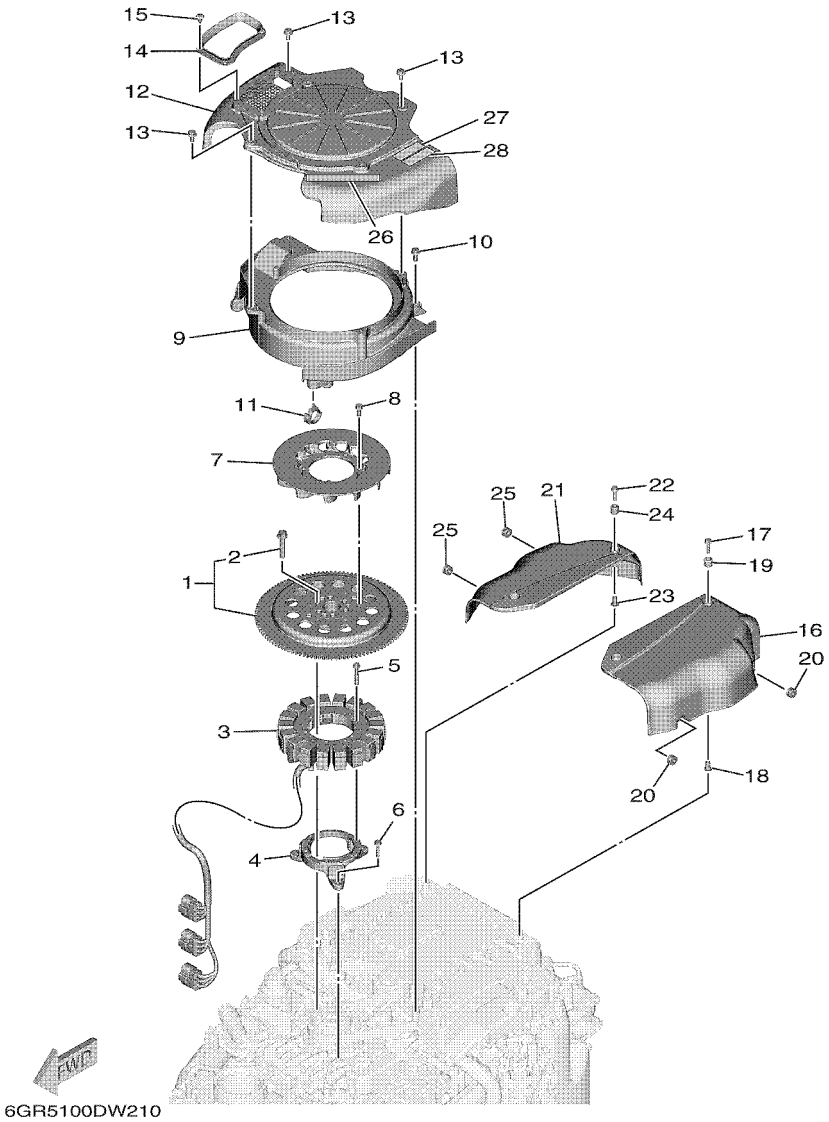

FIG. 20 GENERATOR — GENERATRICE

REF. NO.	PART NO. N° PIECES	DESCRIPTION DESCRIPTION	NS	NS2				REMARKS REMARQUES
1	6KN–W8145–00	ROTOR ASSY WITH BOLTS ROTOR COMPLET AVEC BOULON	1	1				
2	6EK–W9010–00	.BOLT SET .BOULON ENS.	1	1				
3	6GR–81410–00	STATOR ASSY STATOR COMPLET	1	1				
4	6GR–85561–01	BASE, MAGNETO BASE, MAGNETO	1	1				
5	95022–06035	BOLT, FLANGE BOULON, A COLLERETTE	6	6				
6	95D95–06030	BOLT, FLANGE DEEP RECESS BOULON FIXATION	3	3				
7	6GR–85586–01	FAN VENTILATEUR	1	1				
8	97E95–06516	BOLT, HEXAGON W/W DEEP RECESS VIS HEXAGONAL AVC RONDELLE	4	4				
9	6GR–12651–00	AIR SHROUD, CYLINDER 1 COUVERCLE, CYLINDRE 1	1	1				
10	95D95–06016	BOLT, FLANGE DEEP RECESS BOULON FIXATION	3	3				
11	90464–12183	CLAMP BRIDE	1	1				
12	6GR–12653–01	AIR SHROUD, CYLINDER 3 COUVERCLE, CYLINDRE 3	1	1				
13	95D95–06012	BOLT, FLANGE DEEP RECESS BOULON FIXATION	5	5				
14	6GR–12659–00	DAMPER, AIR SHROUD 2 AMORTISSEUR, COUVERCLE 2	1	1				
15	90338–05M03	PLUG PLOT	5	5				
16	6GR–81942–01	COVER COUVERCLE	1	1				
17	95D95–06025	BOLT, FLANGE DEEP RECESS BOULON FIXATION	2	2				
18	90387–06119	COLLAR COLLERETTE	2	2				
19	6A0–82317–01	DAMPER, IGNITION COIL AMORTISSEUR, BOBINE D'ALLUM	2	2				
20	90480–12314	GROMMET PASSE-FIL	2	2				
21	6GR–81639–01	COVER COUVERCLE	1	1				
22	95D95–06025	BOLT, FLANGE DEEP RECESS BOULON FIXATION	2	2				
23	90387–06119	COLLAR COLLERETTE	2	2				
24	6A0–82317–01	DAMPER, IGNITION COIL AMORTISSEUR, BOBINE D'ALLUM	2	2				
25	90480–12314	GROMMET PASSE-FIL	2	2				
26	6GR–13437–61	MARK, CAUTION MAKER	1	1				
27	6EE–81994–40	LABEL, SAFETY ETIQUETTE, SECURITE	1	1				

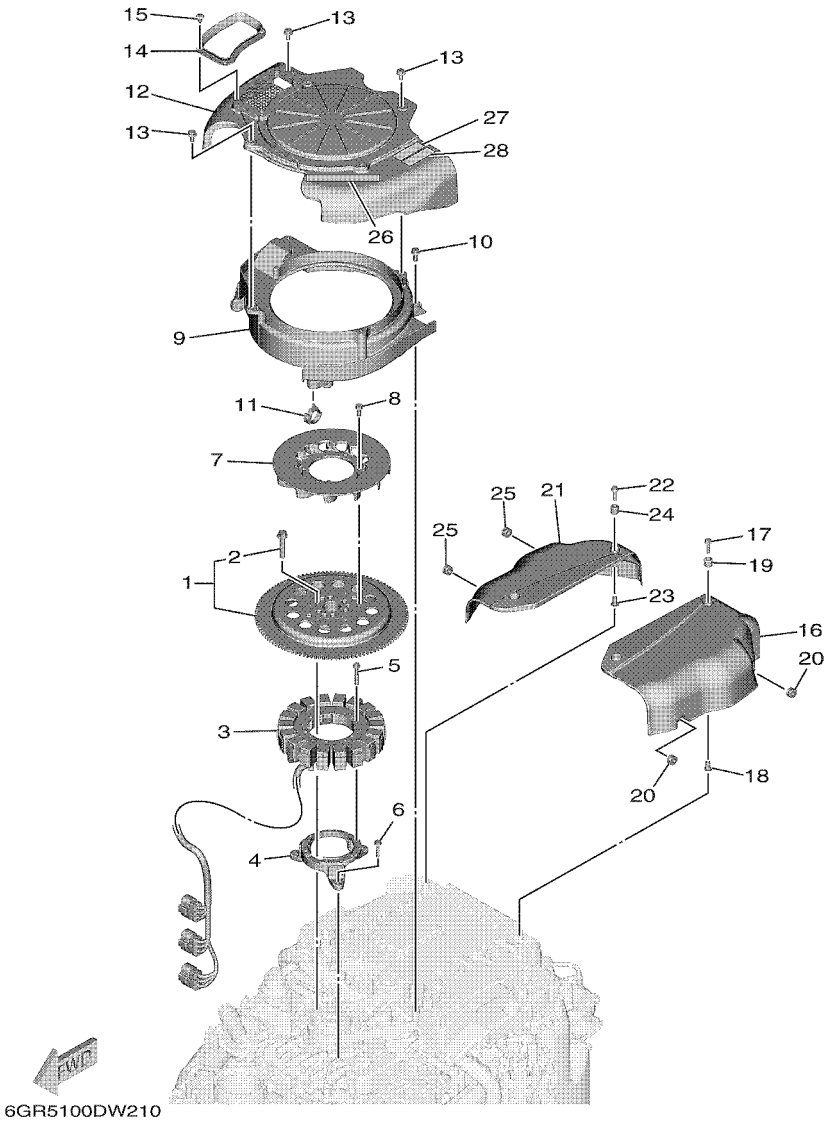

FIG. 20 GENERATOR — GENERATRICE

REF. NO.	PART NO. N° PIECES	DESCRIPTION DESCRIPTION	NS	NS2				REMARKS REMARQUES
28	6EE–81994–50	LABEL, SAFETY ETIQUETTE, SECURITE	1	1				

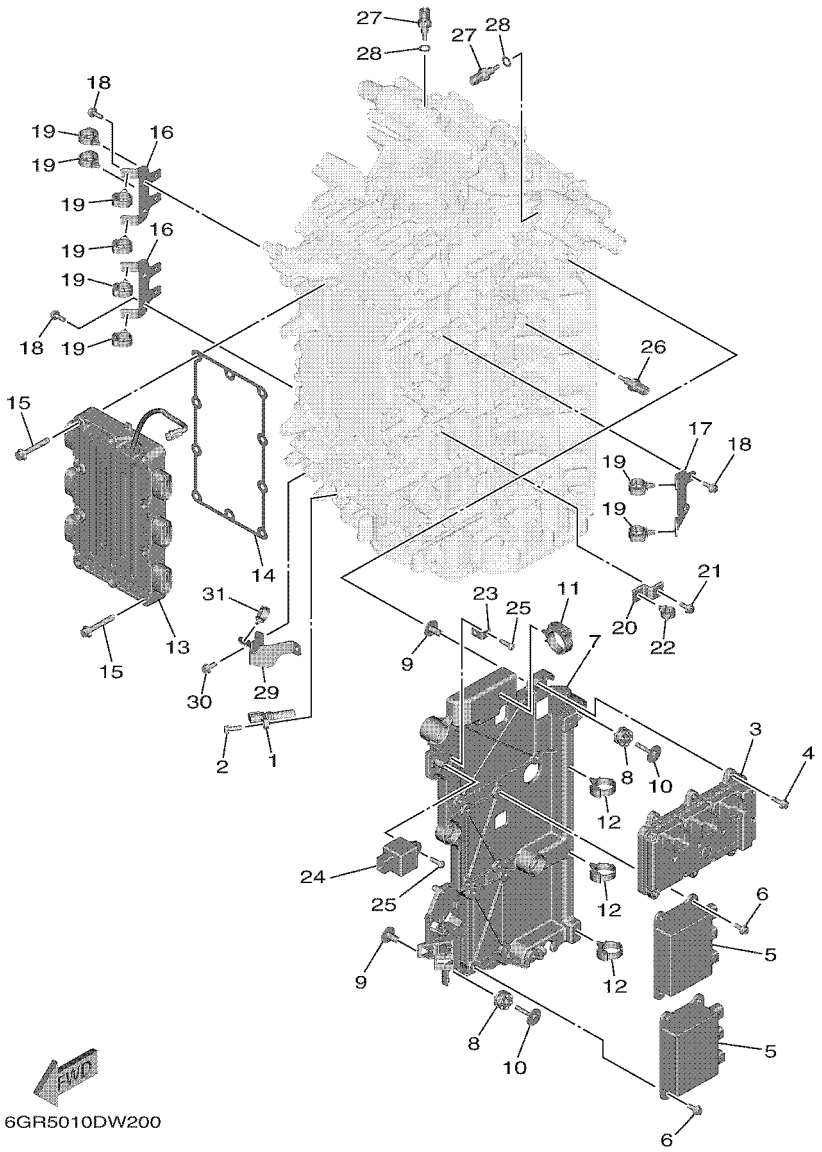

FIG. 21 ELECTRICAL 1 — PARTIE ELECTRIQUE 1

REF. NO.	PART NO. N° PIECES	DESCRIPTION DESCRIPTION	NS	NS2				REMARKS REMARQUES
1	6GR–85895–00	CRANK POSITION SENSOR CAPTEUR DE POSITION MANIVELLE	1	1				
2	97E95–06520	BOLT, HEXAGON W/W DEEP RECESS VIS HEXAGONAL AVC RONDELLE	1	1				
3	6GR–8591A–05	ENGINE CONTROL UNIT ASSY BLOC DE CONTROL	1	1				
4	95D95–06020	BOLT, FLANGE DEEP RECESS BOULON FIXATION	4	4				
5	6GR–8591B–00	DRIVER, INJECTOR ASSY OUTIL D'INSERTION,INJECTEUR	2	2				
6	95D95–06016	BOLT, FLANGE DEEP RECESS BOULON FIXATION	8	8				
7	6GR–81948–02	BRACKET SUPPORT	1	1				
8	60V–85564–00	GROMMET RONDELLE CAOUTCHOUC	6	6				
9	90387–06176	COLLAR COLLERETTE	6	6				
10	68F–85119–00	BOLT BOULON	6	6				
11	90464–32002	CLAMP BRIDE	1	1				
12	90464–12183	CLAMP BRIDE	3	3				
13	6GR–81960–00	RECTIFIER & REGULATOR ASSY REDRESSEUR REGULATEUR CPLT	1	1				
14	6GR–81975–00	PLATE, RECTIFIER FITTING PLAQUE, FIXATION DU REDRESSEUR	1	1				
15	90105–08175	BOLT, FLANGE BOULON, A COLLERETTE	10	10				
16	6GR–8132G–00	PLATE PLAQUE	2	2				
17	6GR–818D2–00	PLATE, 2 PLAQUE, 2	1	1				
18	95D95–06016	BOLT, FLANGE DEEP RECESS BOULON FIXATION	6	6				
19	90464–20181	CLAMP BRIDE	8	8				
20	6DA–82388–00	PLATE PLAQUETTE	1	1				
21	95D95–06016	BOLT, FLANGE DEEP RECESS BOULON FIXATION	1	1				
22	90464–13249	CLAMP BRIDE	1	1				
23	68V–85548–01	HOLDER SUPPORT	1	1				
24	68V–81950–00	RELAY ASSY RELAIS COMPLET	1	1				
25	97780–60620	SCREW, TAPPING VIS, TETE BOMBEE	2	2				
26	4P9–83591–00	THERMO UNIT THERMOSTAT	1	1				
27	6GR–85790–00	THERMOSENSOR ASSY SENSITOMETRE	2	2				

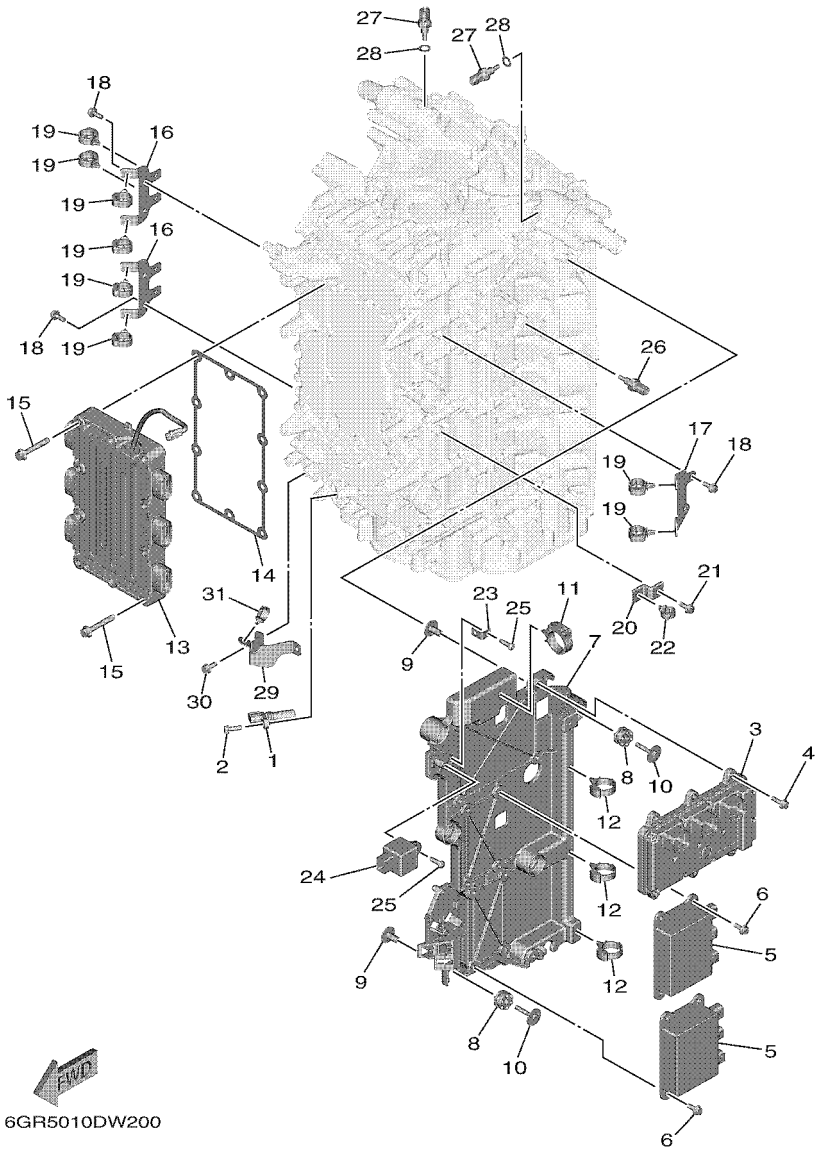

FIG. 21 ELECTRICAL 1 — PARTIE ELECTRIQUE 1

REF. NO.	PART NO. N° PIECES	DESCRIPTION DESCRIPTION	NS	NS2				REMARKS REMARQUES
28	90430–10004	GASKET JOINT	2	2				
29	6GR–83614–00	BRACKET SUPPORT	1	1				
30	95D95–06016	BOLT, FLANGE DEEP RECESS BOULON FIXATION	2	2				
31	90464–13249	CLAMP BRIDE	1	1				

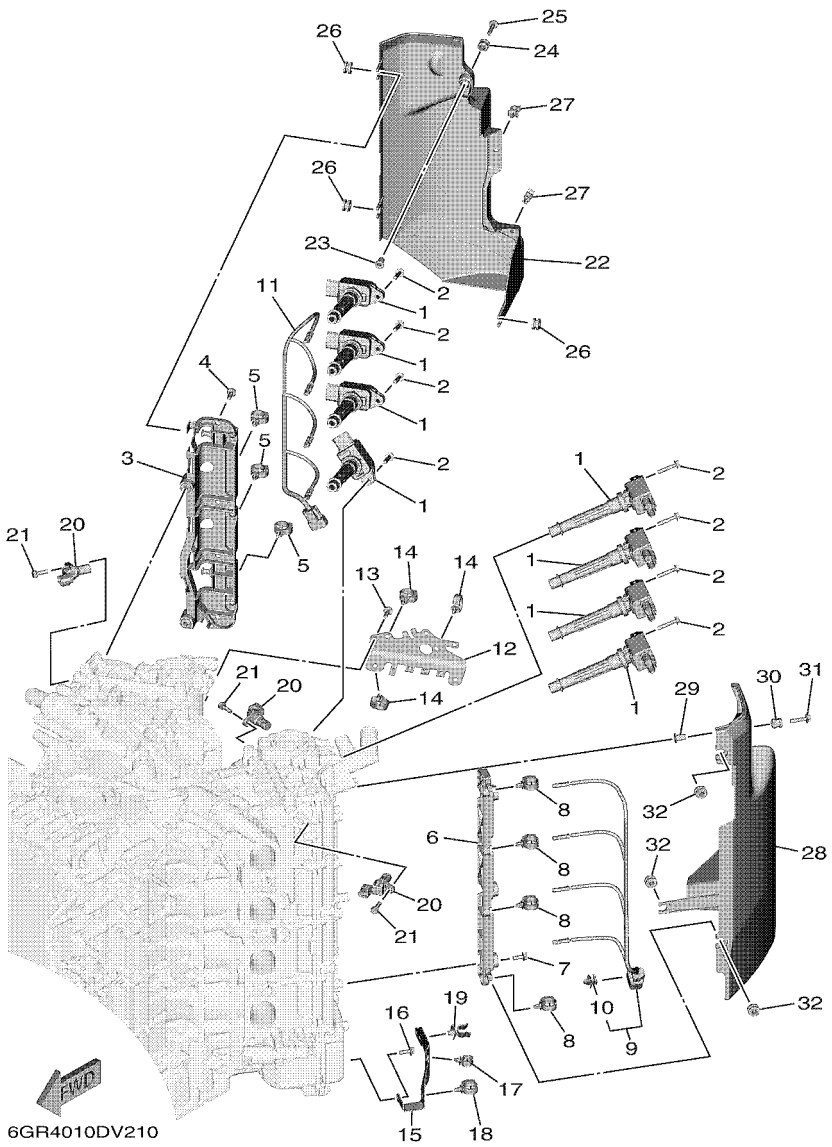

FIG. 22 ELECTRICAL 2 — PARTIE ELECTRIQUE 2

REF. NO.	PART NO. N° PIECES	DESCRIPTION DESCRIPTION	NS	NS2				REMARKS REMARQUES
1	6GR–82310–02	IGNITION COIL ASSY BOBINE D'ALLUMAGE	8	8				
2	90105–06028	BOLT, FLANGE BOULON, A COLLERETTE	8	8				
3	6GR–8272F–01	PLATE, GUIDE 1 PLAQUE, GUIDE 1	1	1				
4	95D95–06016	BOLT, FLANGE DEEP RECESS BOULON FIXATION	5	5				
5	90464–20181	CLAMP BRIDE	3	3				
6	6GR–8272G–01	PLATE, GUIDE 2 PLAQUE, GUIDE 2	1	1				
7	95D95–06016	BOLT, FLANGE DEEP RECESS BOULON FIXATION	3	3				
8	90464–20181	CLAMP BRIDE	4	4				
9	6GR–82386–00	EXTENSION, WIRE HARNESS EXTENSION, FAISCEAU	1	1				
10	90464–09M47	.CLAMP .BRIDE	1	1				
11	6GR–82386–10	EXTENSION, WIRE HARNESS EXTENSION, FAISCEAU	1	1				
12	6GR–82388–01	PLATE PLAQUETTE	1	1				
13	95D95–06016	BOLT, FLANGE DEEP RECESS BOULON FIXATION	2	2				
14	90464–20181	CLAMP BRIDE	3	3				
15	6GR–82389–00	PLATE 2 PLAQUETTE 2	1	1				
16	95D95–06016	BOLT, FLANGE DEEP RECESS BOULON FIXATION	3	3				
17	90464–13249	CLAMP BRIDE	1	1				
18	90464–20181	CLAMP BRIDE	1	1				
19	90464–12015	CLAMP BRIDE	1	1				
20	6GR–85896–00	SENSOR, CAM POSITION SONDE DE CAME	3	3				
21	97E95–06520	BOLT, HEXAGON W/W DEEP RECESS VIS HEXAGONAL AVC RONDELLE	3	3				
22	6GR–11186–01	COVER, CYLINDER HEAD SIDE 2 COUVERCLE LATERAL DE CULASSE 2	1	1				
23	90387–06119	COLLAR COLLERETTE	1	1				
24	6A0–82317–01	DAMPER, IGNITION COIL AMORTISSEUR, BOBINE D'ALLUM	1	1				
25	95D95–06025	BOLT, FLANGE DEEP RECESS BOULON FIXATION	1	1				
26	90480–12314	GROMMET PASSE-FIL	3	3				
27	90464–09129	CLAMP BRIDE	2	2				

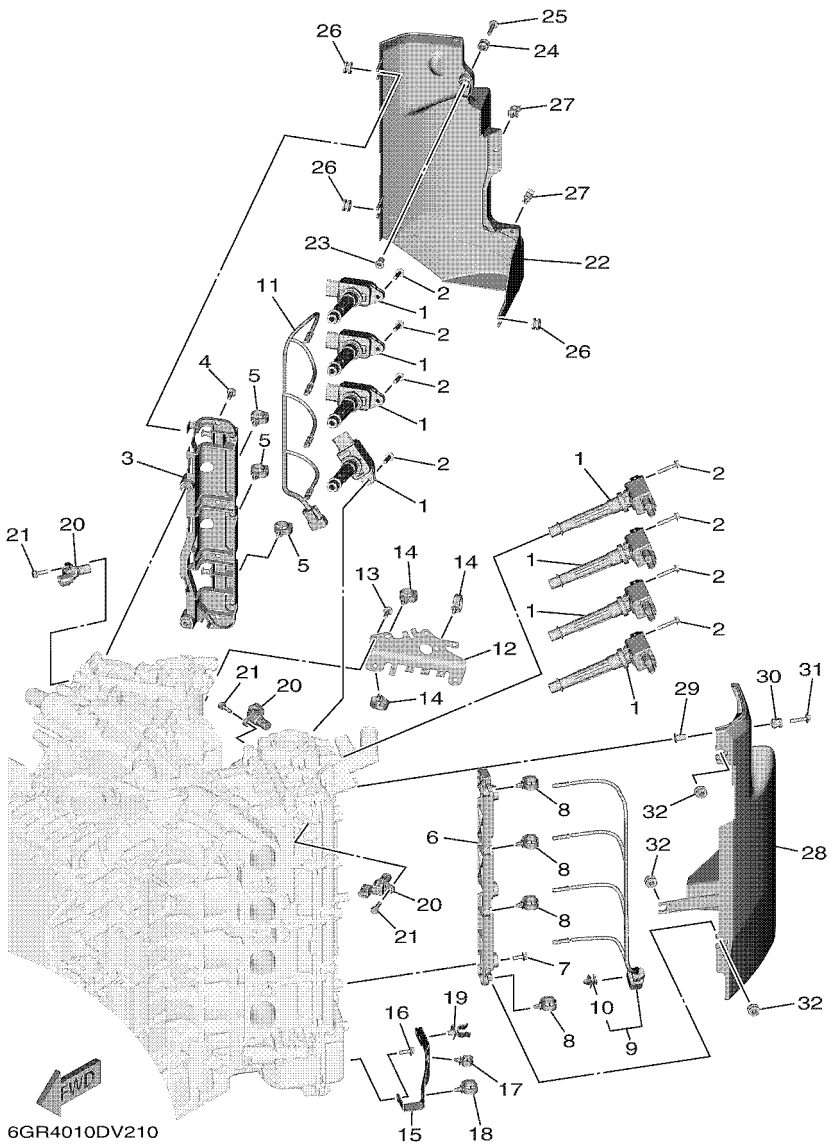

FIG. 22 ELECTRICAL 2 — PARTIE ELECTRIQUE 2

REF. NO.	PART NO. N° PIECES	DESCRIPTION DESCRIPTION	NS	NS2				REMARKS REMARQUES
28	6GR–11187–01	COVER, CYLINDER HEAD SIDE 3 COUVERCLE LATERAL DE CULASSE 3	1	1				
29	90387–06119	COLLAR COLLERETTE	1	1				
30	6A0–82317–01	DAMPER, IGNITION COIL AMORTISSEUR, BOBINE D'ALLUM	1	1				
31	95D95–06025	BOLT, FLANGE DEEP RECESS BOULON FIXATION	1	1				
32	90480–12314	GROMMET PASSE-FIL	3	3				

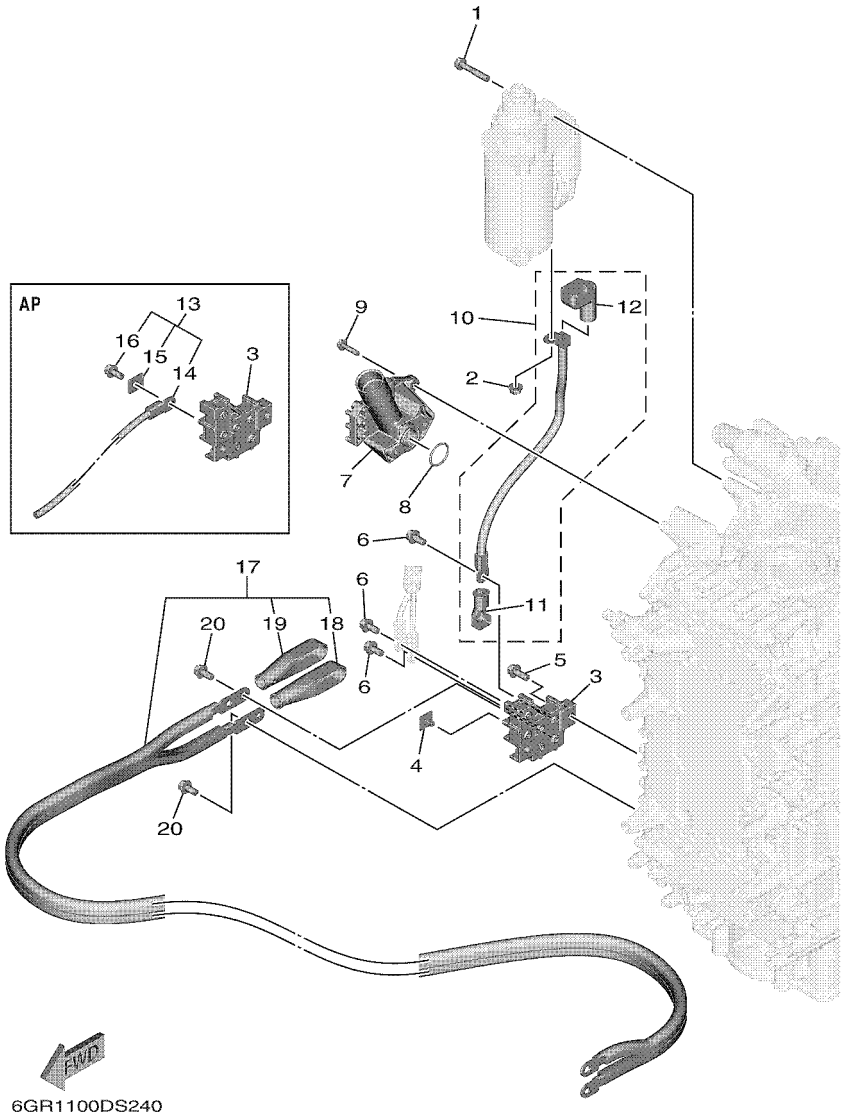

FIG. 23 ELECTRICAL 3 — PARTIE ELECTRIQUE 3

REF. NO.	PART NO. N° PIECES	DESCRIPTION DESCRIPTION	NS	NS2				REMARKS REMARQUES
1	97513–08545	BOLT, WITH WASHER VIS HEXAGONAL AVC RONDELLE	3	3				
2	90179–08003	NUT ECROU	1	1				
3	6GR–81925–00	TERMINAL BORNE	1	1				
4	6GR–81916–00	COVER, TERMINAL COUVERCLE, BORNE	1	1				
5	95D95–08020	BOLT, FLANGE DEEP RECESS BOULON FIXATION	2	2				
6	95D95–08016	BOLT, FLANGE DEEP RECESS BOULON FIXATION	3	3				
7	6GR–81929–00–9S	BRACKET, TERMINAL SUPPORT	1	1				
8	93210–27370	O-RING JOINT TORIQUE	1	1				
9	95D95–06025	BOLT, FLANGE DEEP RECESS BOULON FIXATION	3	3				
10	6GR–82117–00	WIRE, LEAD FIL	1	1				
11	6GR–82119–10	.COVER, LEAD WIRE .GARNITURE, FIL	1	1				
12	6AW–82119–10	.COVER, LEAD WIRE .GARNITURE, FIL	1	1				
13	6GR–762W0–01	WIRE HARNESS KIT FAISCEAU DE FILS COMPLET	1	1				ASK TO MARINE DIV
14	6GR–81949–01	.WIRE, LEAD .FIL	1	1				
15	6P2–81923–00	.WASHER .RONDELLE	1	1				
16	95D95–08016	.BOLT, FLANGE DEEP RECESS .BOULON FIXATION	1	1				
17	6GR–82105–02	WIRE HARNESS FAISCEAU DE FILS	1	1				AP AP
18	6AW–82119–00	.COVER, LEAD WIRE .GARNITURE, FIL	1	1				
19	6AW–82119–20	.COVER, LEAD WIRE .GARNITURE, FIL	1	1				
20	95D95–08016	BOLT, FLANGE DEEP RECESS BOULON FIXATION	3	3				AP AP

FIG. 24 ELECTRICAL 4 — PARTIE ELECTRIQUE 4

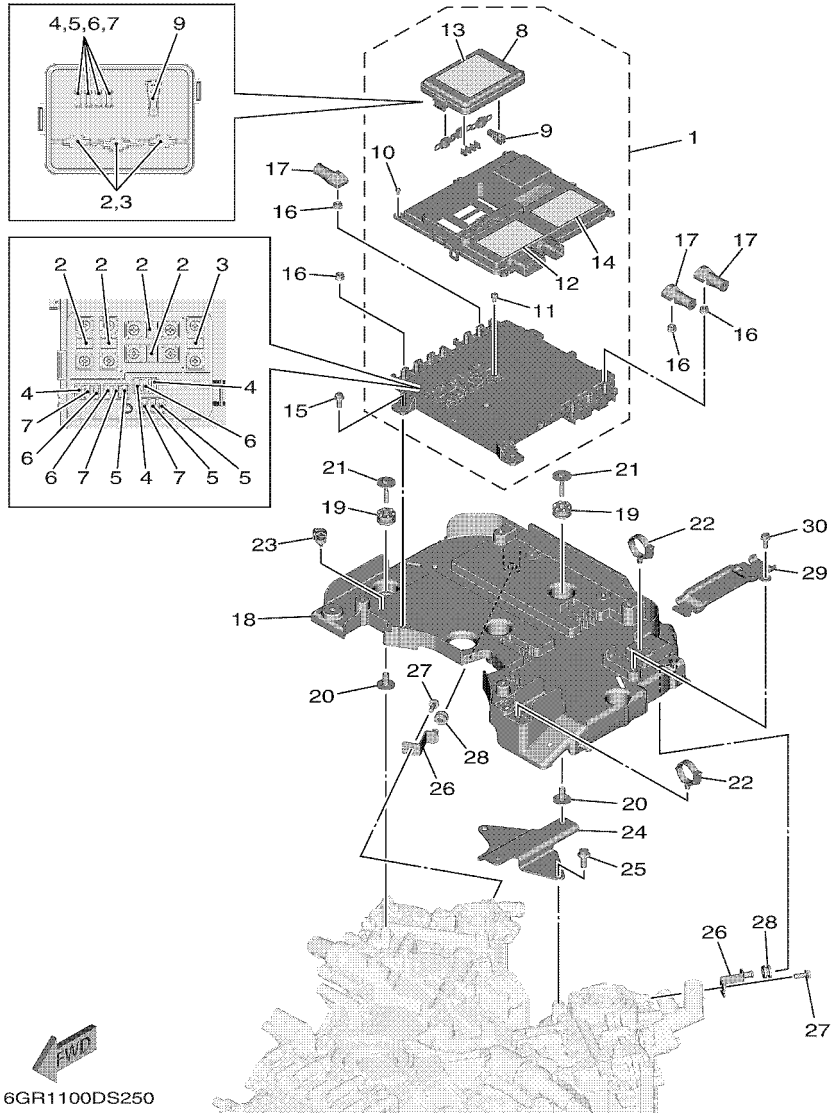

REF. NO.	PART NO. N° PIECES	DESCRIPTION DESCRIPTION	NS	NS2				REMARKS REMARQUES
1	6GR–W85AA–01	ELECTRIC POWER MANAGEMENT UNIT UNITE DE ELECTRIQUE PUISSANCE	1	1				
2	6GR–82151–10	.FUSE (70A) .FUSIBLE (70A)	6	6				
3	6GR–82151–00	.FUSE (100A) .FUSIBLE (100A)	2	2				
4	6CB–82151–00	.FUSE (10A) .FUSIBLE (10A)	4	4				
5	6CB–82151–10	.FUSE (15A) .FUSIBLE (15A)	4	4				
6	6CB–82151–20	.FUSE (20A) .FUSIBLE (20A)	4	4				
7	6CB–82151–30	.FUSE (30A) .FUSIBLE (30A)	4	4				
8	6GR–85544–00	.CASE .BOITIER	1	1				
9	6CB–2812A–00	.PULLER, FUSE .TENDEUR, FUSIBLE	1	1				
10	6P2–82113–00	.SCREW (M3) .VIS (M3)	7	7				
11	68F–82846–00	.SCREW, PAN HEAD (M5) .VIS, TETE TRONCONIQUE (M5)	10	10				
12	6GR–81919–01	.GRAPHIC, REGULATOR .ADHESIF, REGULATEUR	1	1				
13	6GR–81919–11	.GRAPHIC, REGULATOR .ADHESIF, REGULATEUR	1	1				
14	6GR–81919–20	.GRAPHIC, REGULATOR .ADHESIF, REGULATEUR	1	1				
15	95D95–06016	BOLT, FLANGE DEEP RECESS BOULON FIXATION	4	4				
16	95780–06500	NUT, FLANGE ECROU	10	10				
17	6GR–82119–00	COVER, LEAD WIRE GARNITURE, FIL	3	3				
18	6GR–82589–00	PROTECTER, WIRE HARNESS PROTECTEUR, FAISCEAU DE FILS	1	1				
19	68F–85516–01	SPACER ENTRETOISE	4	4				
20	90387–06176	COLLAR COLLERETTE	4	4				
21	68F–85119–00	BOLT BOULON	4	4				
22	90464–30001	CLAMP BRIDE	2	2				
23	90464–13249	CLAMP BRIDE	1	1				
24	6GR–82171–01	STAY, FUSE BOX SUPPORT, BOITE A FUSIBLES	1	1				
25	95D95–08020	BOLT, FLANGE DEEP RECESS BOULON FIXATION	2	2				
26	6GR–8272U–00	PLATE, JOINT PLAQUE, RACCORD	2	2				
27	95D95–06016	BOLT, FLANGE DEEP RECESS BOULON FIXATION	2	2				

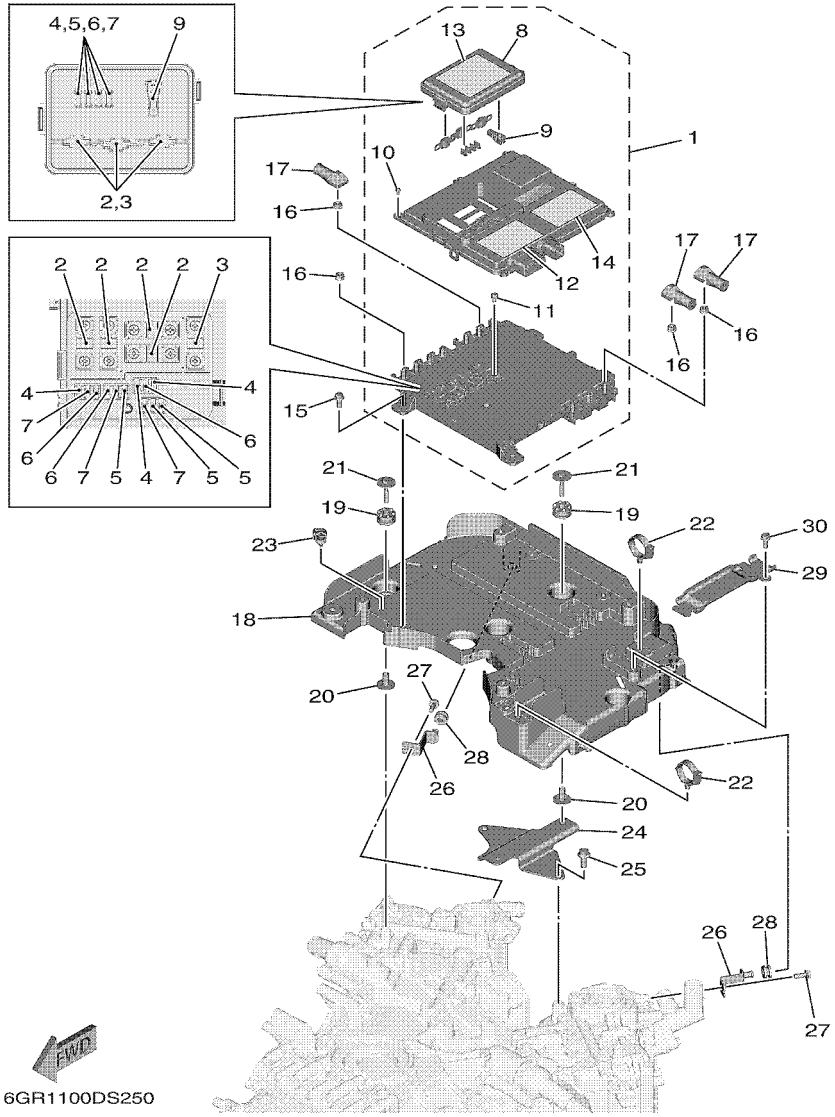

FIG. 24 ELECTRICAL 4 — PARTIE ELECTRIQUE 4

REF. NO.	PART NO. N° PIECES	DESCRIPTION DESCRIPTION	NS	NS2				REMARKS REMARQUES
28	90480–12314	GROMMET PASSE-FIL	2	2				
29	6GR–85525–00	COVER CAPUCHON	1	1				
30	95D95–06016	BOLT, FLANGE DEEP RECESS BOULON FIXATION	1	1				

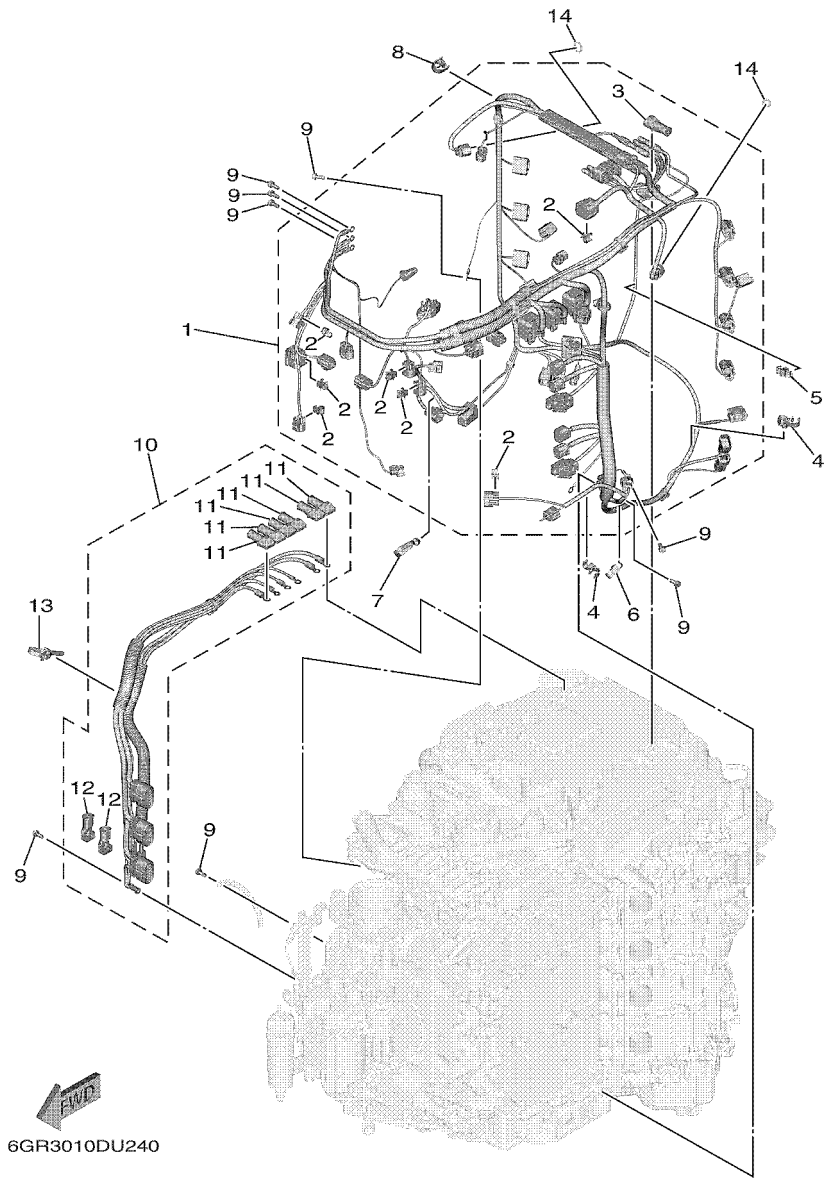

FIG. 25 ELECTRICAL 5 — PARTIE ELECTRIQUE 5

REF. NO.	PART NO. N° PIECES	DESCRIPTION DESCRIPTION	NS	NS2				REMARKS REMARQUES
1	6GR–82590–02	WIRE HARNESS ASSY FAISCEAU DE FILS COMPLET	1	1				
2	90464–09M47	.CLAMP .BRIDE	8	8				
3	6GR–82119–00	.COVER, LEAD WIRE .GARNITURE, FIL	1	1				
4	90464–12012	CLAMP BRIDE	2	2				
5	90464–09013	CLAMP BRIDE	1	1				
6	90464–12010	CLAMP BRIDE	1	1				
7	90465–13M24	CLAMP BRIDE	1	1				
8	90464–18004	CLAMP BRIDE	1	1				
9	97E95–06516	BOLT, HEXAGON W/W DEEP RECESS VIS HEXAGONAL AVC RONDELLE	8	8				
10	6GR–8259M–00	WIRE HARNESS ASSY 2 FAISCEAU DE FILS	1	1				
11	6GR–82119–00	.COVER, LEAD WIRE .GARNITURE, FIL	6	6				
12	6GR–82119–10	.COVER, LEAD WIRE .GARNITURE, FIL	2	2				
13	90464–44002	CLAMP BRIDE	1	1				
14	93210–11001	O-RING JOINT TORIQUE	2	2				

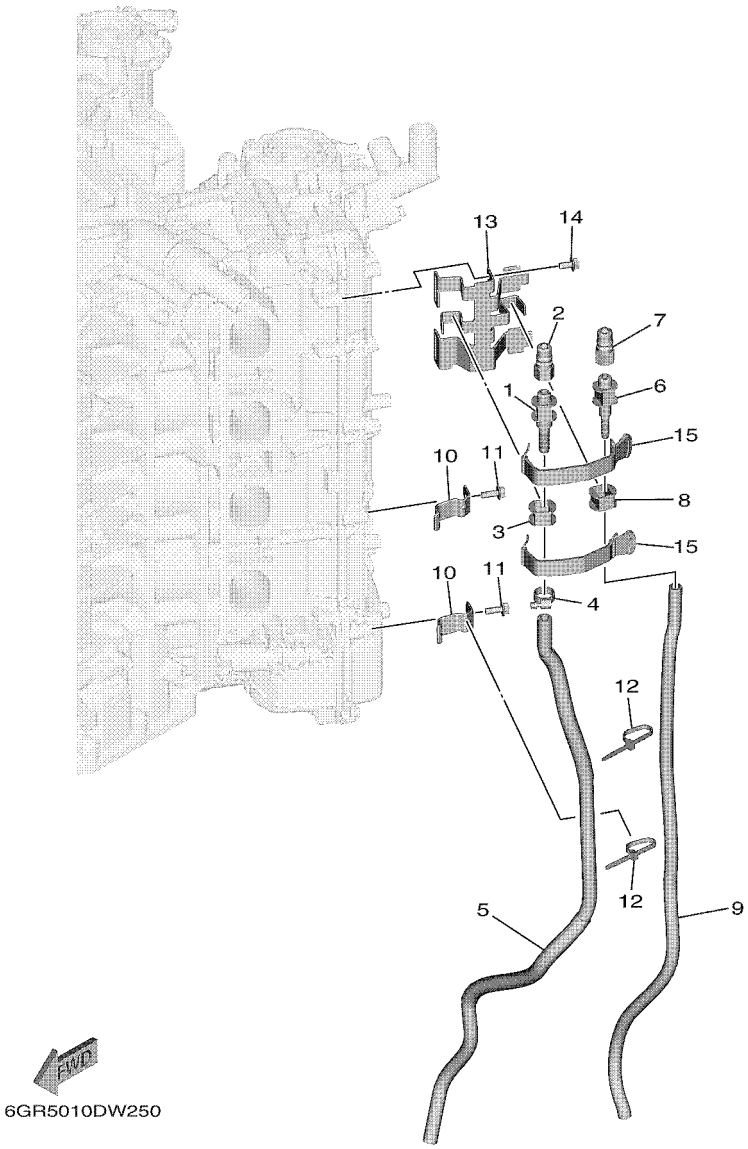

6GR5010DW250

FIG. 26 ELECTRICAL 6 — PARTIE ELECTRIQUE 6

REF. NO.	PART NO. N° PIECES	DESCRIPTION DESCRIPTION	NS	NS2				REMARKS REMARQUES
1	6GR–45394–01	HOSE, FITTING 1 TUYAU, RACCORD 1	1	1				
2	6GR–45393–00	COUPLER COUPLEUR	1	1				
3	6GR–81662–00	COVER, CONNECTER COUVERCLE, CONNECTEUR	1	1				
4	90450–14M05	HOSE CLAMP ASSY BRIDE, DE DURITE	1	1				
5	6GR–4383E–01	HOSE, OIL 2 DURITE A HUILE	1	1				
6	6GR–45395–00	HOSE, FITTING 2 TUYAU, RACCORD 2	1	1				
7	6GR–45393–00	COUPLER COUPLEUR	1	1				
8	6GR–82599–00	COVER, CONNECTOR COUVERCLE, CONNECTEUR	1	1				
9	6GR–2318K–00	HOSE, AIR 2 TUYAU, A AIR 2	1	1				
10	6GR–81443–00	CLAMP, LEAD 1 BRIDE, FIL 1	2	2				
11	95D95–06016	BOLT, FLANGE DEEP RECESS BOULON FIXATION	2	2				
12	90465–13M97	CLAMP BRIDE	2	2				
13	6GR–81845–00	PLATE PLAQUE	1	1				
14	95D95–06012	BOLT, FLANGE DEEP RECESS BOULON FIXATION	2	2				
15	6GR–82131–01	BAND, BATTERY BANDE, DE BATTERIE	2	2				

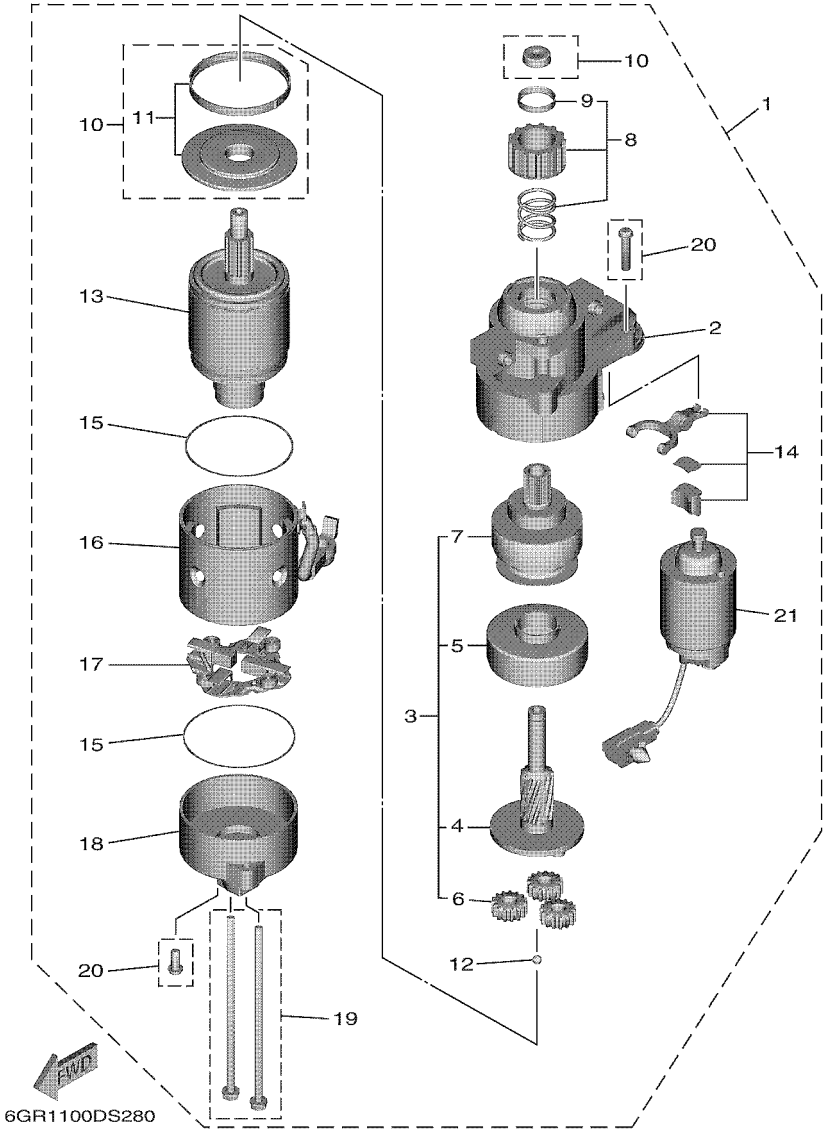

FIG. 27 STARTING MOTOR — DEMARREUR ELECTRIQUE

REF. NO.	PART NO. N° PIECES	DESCRIPTION DESCRIPTION	NS	NS2				REMARKS REMARQUES
1	6AW–81800–00	STARTING MOTOR ASSY DEMARREUR ELECTRIQUE COMPLET	1	1				
2	6AW–81830–00	.FRONT BRACKET ASSY .SUPPORT AVANT	1	1				
3	6AW–81807–00	.GEAR ASSY, STARTING MOTOR .PIGNON, DEMARREUR ELECTRIQUE	1	1				
4	6AW–81836–00	..SHAFT, PINION ..AXE, PIGNON	1	1				
5	6AW–81891–00	..GEAR, RING ..ROUE DENTEE	1	1				
6	6AW–8183T–00	..GEAR, IDLER ..PIGNON, INTERMEDIAIRE	3	3				
7	6AW–81832–00	..CLUTCH, OVER RUN ..EMBRAYAGE, ROUE LIBRE	1	1				
8	6AW–81808–00	.PINION ASSY .PIGNON	1	1				
9	6AW–81857–00	..PINION STOPPER SET ..BUTEE PIGNON	1	1				
10	6AW–81862–00	.CAP .COUVERCLE	1	1				
11	6AW–8183R–00	..PACKING SET ..POCHETTE DE JOINTS	1	1				
12	6AW–81854–00	.BALL, STEEL .BALLE, ACIER	1	1				
13	6AW–81850–00	.ARMATURE ASSY .INDUIT	1	1				
14	6AW–81839–00	.LEVER ASSY .LEVIER COMPLET	1	1				
15	6AW–81842–00	.PACKING .JOINTS	2	2				
16	6AW–81810–00	.STATOR ASSY .STATOR COMPLET	1	1				
17	6AW–81840–00	.BRUSH HOLDER ASSY .SUPPORT DE CHARBON	1	1				
18	6AW–81820–00	.REAR BRACKET ASSY .SUPPORT ARRIERE COMPLET	1	1				
19	6AW–81826–00	.BOLT .BOULON	1	1				
20	6AW–81846–00	.SCREW .VIS	1	1				
21	6AW–81941–00	.STARTER RELAY ASSY .LANCEUR RELAIS (ENS.)	1	1				

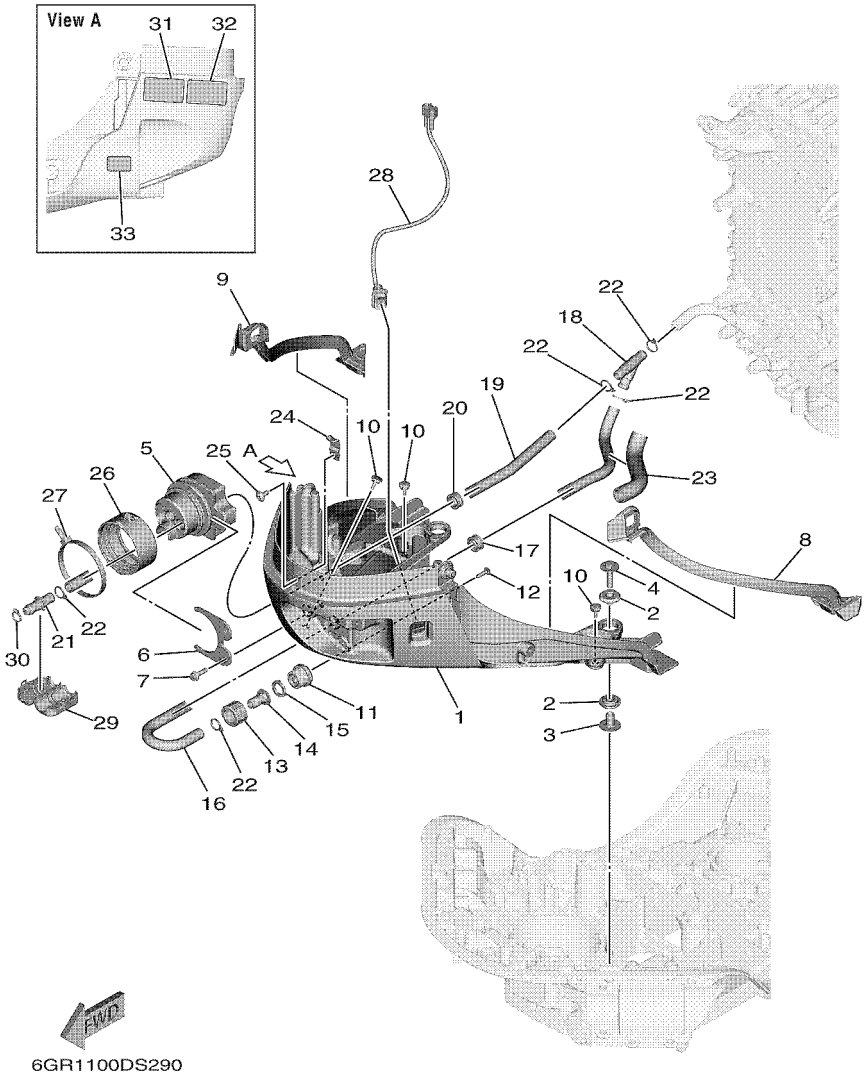

FIG. 28 BOTTOM COWLING 1 — CAPOT INFERIEUR 1

REF. NO.	PART NO. N° PIECES	DESCRIPTION DESCRIPTION	NS	NS2				REMARKS REMARQUES
1	6GR–42711–01–8D	COWLING, BOTTOM 1 CUVETTE 1	1					UR GRAY UR GRAY
	6GR–42711–01–CE	COWLING, BOTTOM 1 CUVETTE 1		1				UR WHITE UR WHITE
2	90480–22M81	GROMMET PASSE-FIL	4	4				
3	90387–08M37	COLLAR COLLERETTE	2	2				
4	90119–08187	BOLT, WITH WASHER BOULON, AVEC RONDELLE	2	2				
5	6GR–42725–02	GROMMET PASSE-FIL	1	1				
6	6GR–42761–00	STOPPER PLAQUETTE	1	1				
7	95D95–06020	BOLT, FLANGE DEEP RECESS BOULON FIXATION	2	2				
8	6GR–42717–00	RUBBER, SEAL 2 JOINT EN CAOUTCHOUC 2	1	1				
9	6GR–42718–00	RUBBER, SEAL 3 JOINT	1	1				
10	6H4–42748–01	GROMMET PASSE-FIL	3	3				
11	6R3–12572–00	ADAPTER ADAPTATEUR	1	1				
12	90169–05M00	SCREW, TRUSS HEAD TAPPING VIS, TETE FRAISEE	1	1				
13	6R3–12581–00	JOINT, HOSE 1 JOINT DE TUYAU	1	1				
14	6GR–12582–00	JOINT, HOSE 2 RACCORD DE TUYAU 1	1	1				
15	6R3–12583–00	GASKET, HOSE JOINT JOINT	1	1				
16	6GR–12577–00	HOSE 2 TUYAU 2	1	1				
17	90480–20M05	GROMMET PASSE-FIL	1	1				
18	6GR–24378–00	PIPE, JOINT 3 DURITE RACCORDEMENT 3	1	1				
19	90445–16025	HOSE (L290) DURITE (L290)	1	1				
20	90480–20M05	GROMMET PASSE-FIL	1	1				
21	6GR–83558–00	END, NIPPLE RACCORD DE NIPPLE	1	1				
22	90465–11M10	CLAMP BRIDE	5	5				
23	90445–23003	HOSE (L150) DURITE (L150)	1	1				
24	6GR–44554–00	PLATE PLAQUETTE	1	1				
25	90111–06144	BOLT,HEX. SOCKET BUTTON BOULON	1	1				
26	6GR–42753–00	FASTNER ATTACHE	1	1				AP AP

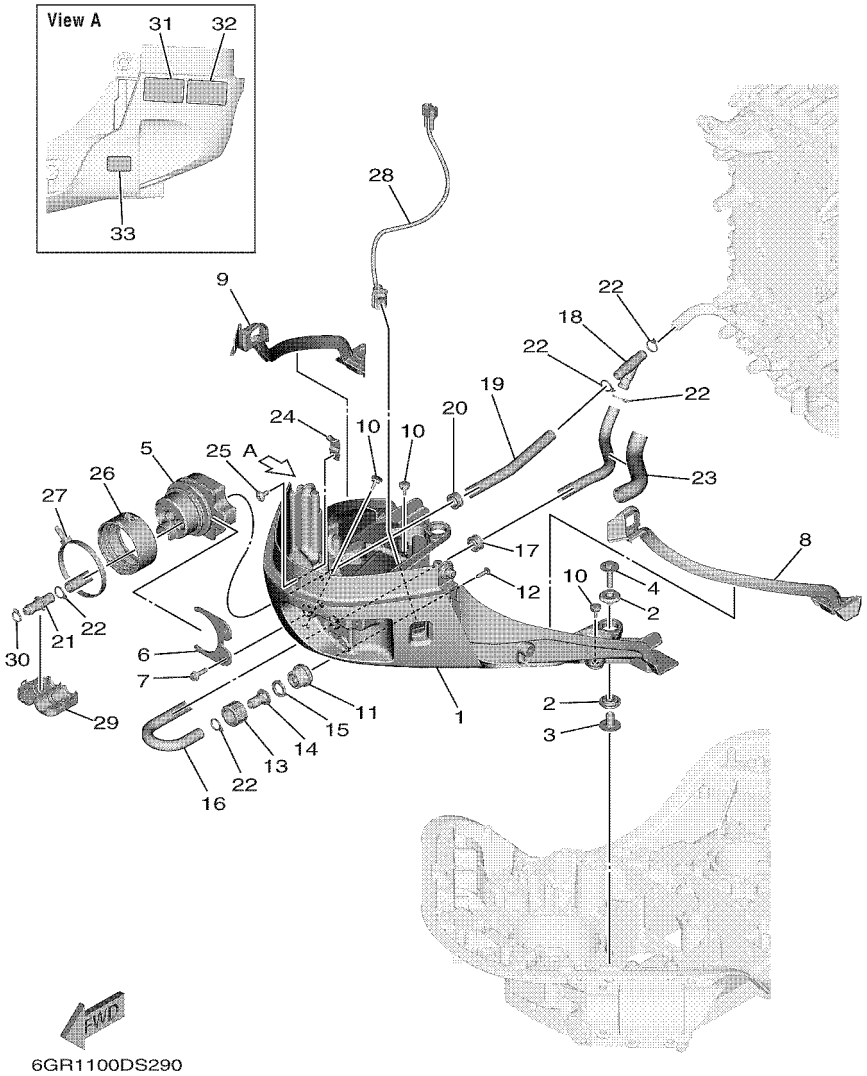

FIG. 28 BOTTOM COWLING 1 — CAPOT INFERIEUR 1

REF. NO.	PART NO. N° PIECES	DESCRIPTION DESCRIPTION	NS	NS2				REMARKS REMARQUES
27	90464–99006	CLAMP BRIDE	1	1				AP AP
28	6GR–82563–00	TRIM & TILT SWITCH ASSY INCLINER ET PARER COMMUTATEUR	1	1				
29	6GR–24452–00	COVER COUVERCLE	1	1				AP AP
30	90460–15227	CLAMP, HOSE BRIDE, DE DURITE	1	1				AP AP
31	6EE–42794–40	LABEL, WARNING (GENERAL) ETIQUETTE, AVERTISSEMENT	1	1				
32	6EE–42794–50	LABEL, WARNING (GENERAL) ETIQUETTE, AVERTISSEMENT	1	1				
33	6AH–81996–00	MARK MARQUE	1	1				

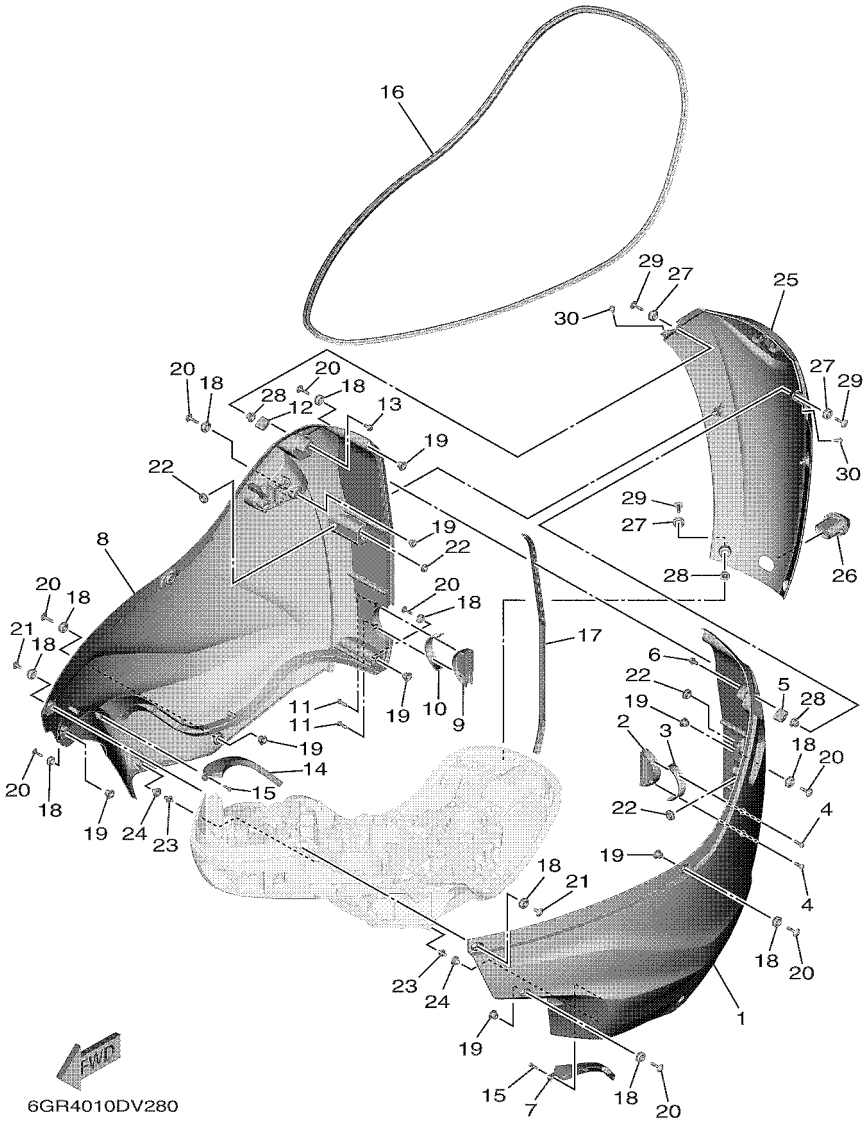

FIG. 29 BOTTOM COWLING 2 — CAPOT INFERIEUR 2

REF. NO.	PART NO. N° PIECES	DESCRIPTION DESCRIPTION	NS	NS2				REMARKS REMARQUES
1	6GR–42712–01–8D	COWLING, BOTTOM 2 CUVETTE 2	1					UR GRAY UR GRAY
	6GR–42712–01–CE	COWLING, BOTTOM 2 CUVETTE 2		1				UR WHITE UR WHITE
2	6GR–42532–00	COVER COUVERCLE	1	1				
3	6GR–42721–00	GASKET 1 JOINT 1	1	1				
4	97780–50620	SCREW, TAPPING VIS, TETE BOMBEE	2	2				
5	6GR–42744–00	STAY SUPPORT	1	1				
6	95D95–06012	BOLT, FLANGE DEEP RECESS BOULON FIXATION	2	2				
7	6GR–42622–01	DAMPER AMORTISSEUR	1	1				
8	6GR–42713–01–8D	COWLING, BOTTOM 3 CUVETTE 3	1					UR GRAY UR GRAY
	6GR–42713–01–CE	COWLING, BOTTOM 3 CUVETTE 3		1				UR WHITE UR WHITE
9	6GR–42533–00	COVER CARTER	1	1				
10	6GR–42722–00	GASKET 2 JOINT 2	1	1				
11	97780–50620	SCREW, TAPPING VIS, TETE BOMBEE	2	2				
12	6GR–42744–00	STAY SUPPORT	1	1				
13	95D95–06012	BOLT, FLANGE DEEP RECESS BOULON FIXATION	2	2				
14	6GR–42623–01	SIDE, MOLE COWLING 2 COTE, MOULURE CARENAGE 2	1	1				
15	90167–05017	SCREW, TAPPING VIS, TETE FRAISEE	4	4				
16	6GR–42615–00	SEAL JOINT	1	1				
17	6GR–42769–00	SEAL, RUBBER BOURRELET, CAOUTCHOUC	1	1				
18	90480–16015	GROMMET PASSE-FIL	14	14				
19	6GR–42758–00	COLLAR ENTRETOISE	12	12				
20	90111–06175	BOLT,HEX. SOCKET BUTTON BOULON	12	12				
21	90111–06176	BOLT,HEX. SOCKET BUTTON BOULON	2	2				
22	90480–13034	GROMMET PASSE-FIL	4	4				
23	69J–42774–10	STAY, APRON 1 COUSSINET	2	2				
24	6GR–42768–01	DAMPER AMORTISSEUR	2	2				
25	6GR–42625–00–8D	PANEL, REAR PANNEAU	1					UR GRAY UR GRAY

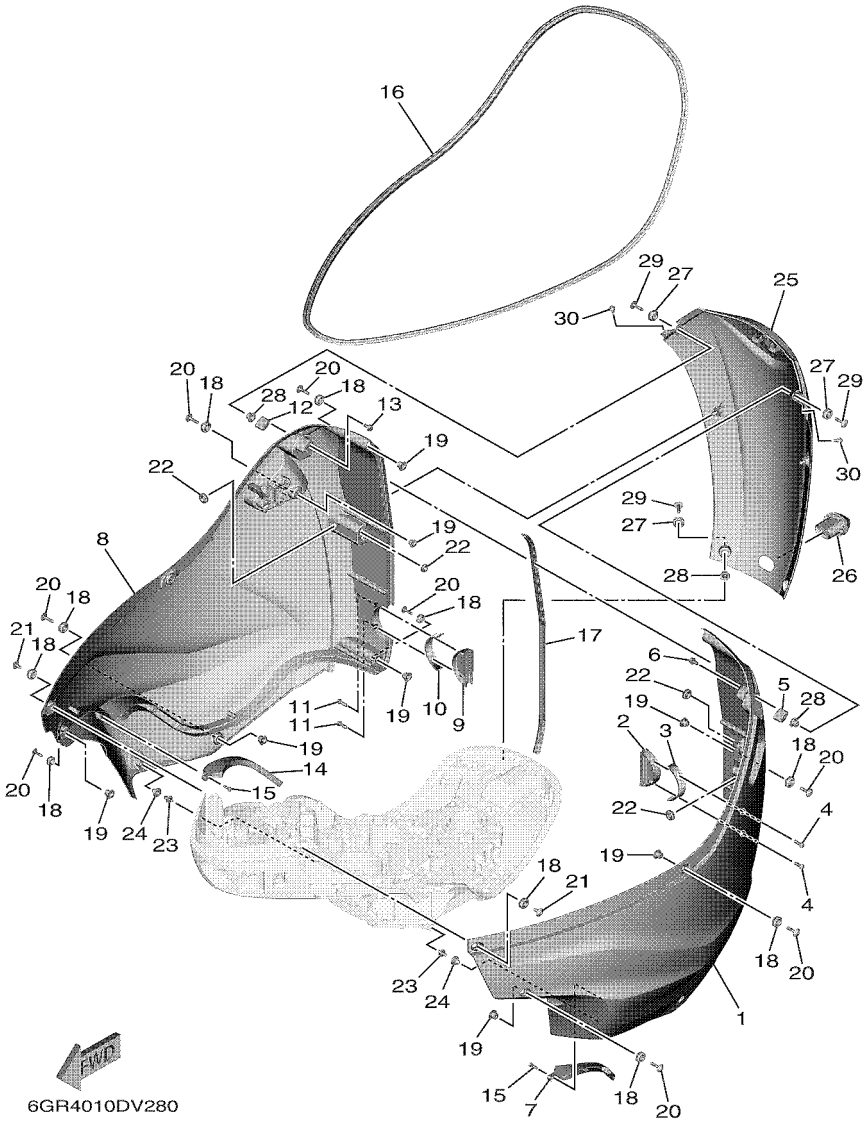

FIG. 29 BOTTOM COWLING 2 — CAPOT INFERIEUR 2

REF. NO.	PART NO. N° PIECES	DESCRIPTION DESCRIPTION	NS	NS2				REMARKS REMARQUES
25	6GR–42625–00–CE	PANEL, REAR PANNEAU		1				UR WHITE UR WHITE
26	6GR–42748–01	GROMMET PASSE-FIL	1	1				
27	90480–16015	GROMMET PASSE-FIL	4	4				
28	6GR–42758–00	COLLAR ENTRETOISE	4	4				
29	90111–06175	BOLT,HEX. SOCKET BUTTON BOULON	4	4				
30	90338–07012	PLUG PLOT	2	2				

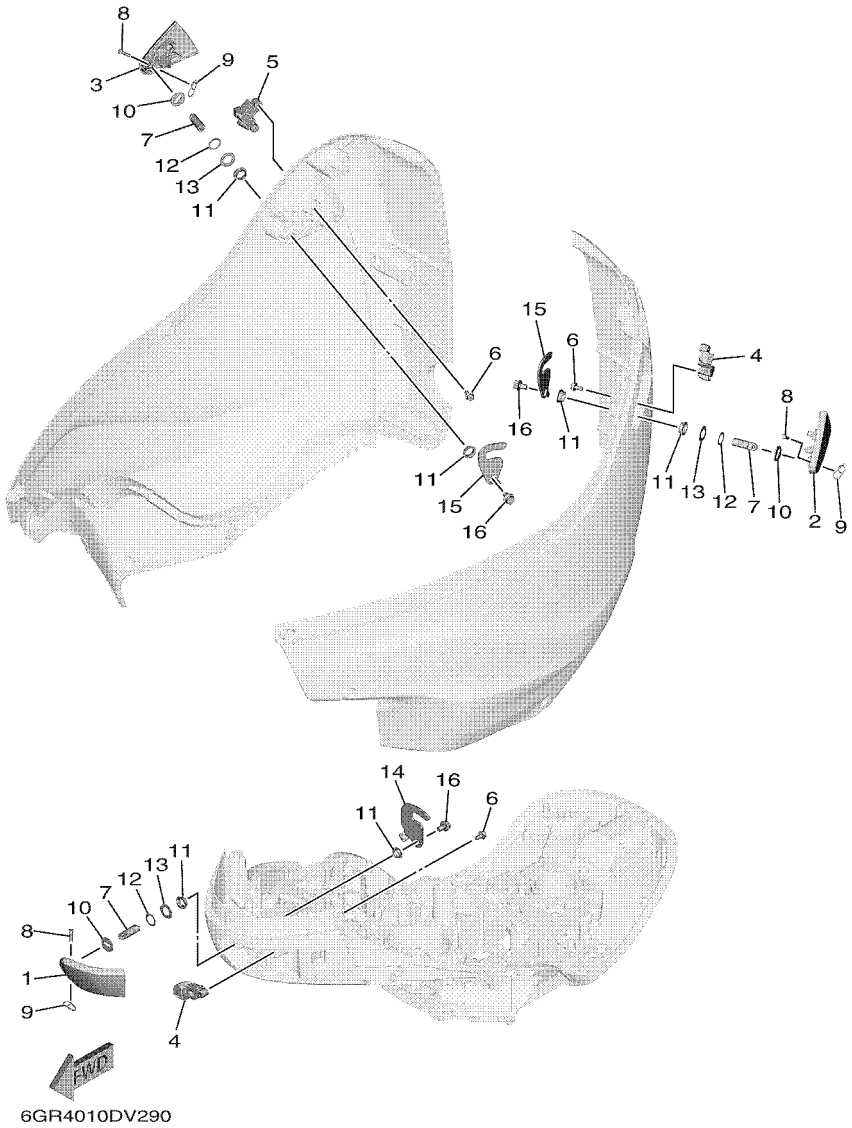

FIG. 30 BOTTOM COWLING 3 — CAPOT INFERIEUR 3

REF. NO.	PART NO. N° PIECES	DESCRIPTION DESCRIPTION	NS	NS2				REMARKS REMARQUES
1	6GR–42815–00–8D	LEVER, CLAMP 1 LEVIER, PRESSE 1	1					UR GRAY UR GRAY
	6GR–42815–00–CE	LEVER, CLAMP 1 LEVIER, PRESSE 1		1				UR WHITE UR WHITE
2	6GR–42816–01–8D	LEVER, CLAMP 2 LEVIER, PRESSE 2	1					UR GRAY UR GRAY
	6GR–42816–01–CE	LEVER, CLAMP 2 LEVIER, PRESSE 2		1				UR WHITE UR WHITE
3	6GR–42817–01–8D	LEVER, CLAMP 3 LEVIER, PRESSE 3	1					UR GRAY UR GRAY
	6GR–42817–01–CE	LEVER, CLAMP 3 LEVIER, PRESSE 3		1				UR WHITE UR WHITE
4	6GR–42828–00	PLATE, CLAMP PLAQUE, PRESSE	2	2				
5	6GR–42829–00	PLATE, CLAMP 2 PLAQUE, PRESSE 2	1	1				
6	95D95–06012	BOLT, FLANGE DEEP RECESS BOULON FIXATION	6	6				
7	6GR–42835–00	PIN, SET 1 GOUPILLE, ELASTIQUE 1	3	3				
8	90240–05002	PIN, CLEVIS BOULON, A GOUPILLE	3	3				
9	68T–42835–00	PIN, SET 1 GOUPILLE, ELASTIQUE 1	3	3				
10	6GR–42833–00	WASHER, PLAIN RONDELLE, PLATE	3	3				
11	90386–15M73	BUSH DOUILLE	6	6				
12	90206–15M18	WASHER, WAVE RONDELLE, ONDULEE	3	3				
13	90201–156J2	WASHER, PLATE RONDELLE, PLATE	3	3				
14	6GR–42818–00	LEVER, CLAMP 4 LEVIER, PRESSE 4	1	1				
15	6GR–42819–00	LEVER, CLAMP 5 LEVIER, PRESSE 5	2	2				
16	95D95–08012	BOLT, FLANGE DEEP RECESS BOULON FIXATION	3	3				

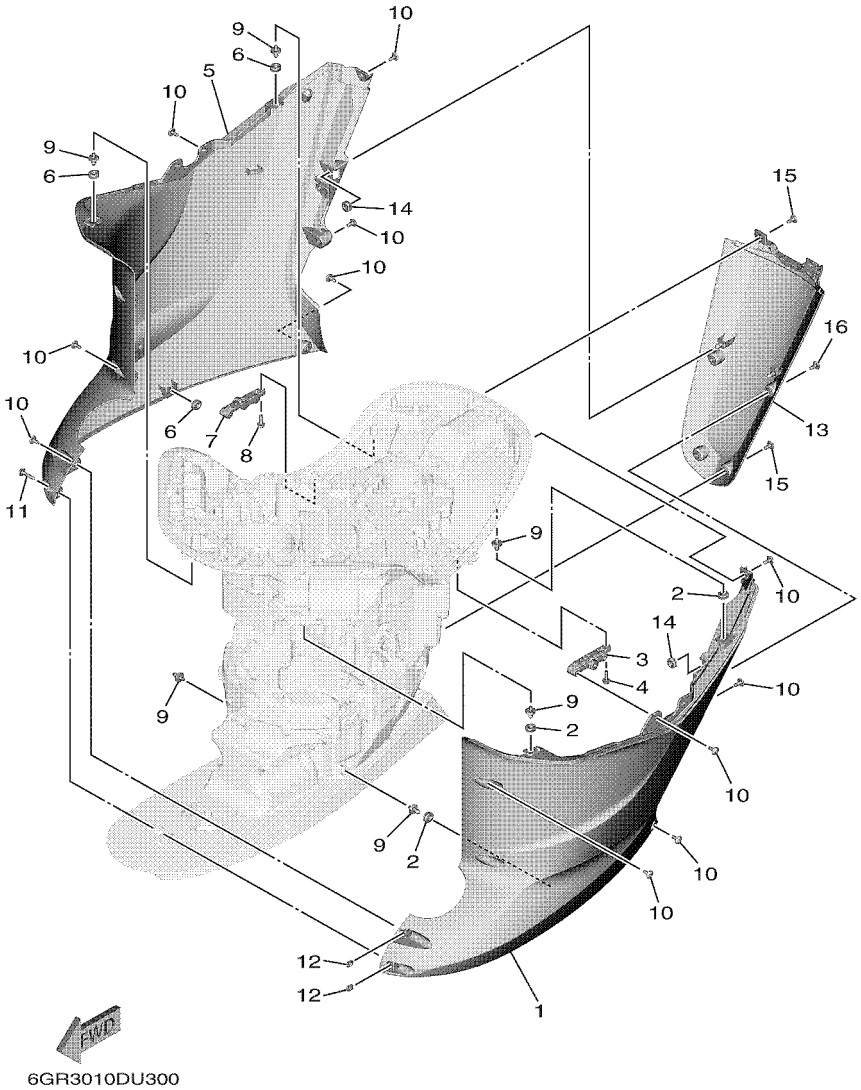

FIG. 31 BOTTOM COWLING 4 — CAPOT INFERIEUR 4

REF. NO.	PART NO. N° PIECES	DESCRIPTION DESCRIPTION	NS	NS2				REMARKS REMARQUES
1	6GR–42740–00–8D	APRON COMPLETE 1 CAPOT LATERAL COMPLETE 1	1					UR GRAY UR GRAY
	6GR–42740–00–CE	APRON COMPLETE 1 CAPOT LATERAL COMPLETE 1		1				UR WHITE UR WHITE
2	90480–14M17	GROMMET PASSE-FIL	3	3				
3	6GR–42774–00–CA	STAY, APRON 1 COUSSINET	1	1				
4	95D95–06020	BOLT, FLANGE DEEP RECESS BOULON FIXATION	2	2				
5	6GR–42770–00–8D	APRON COMPLETE 2 CAPOT LATERAL COMPLETE 2	1					UR GRAY UR GRAY
	6GR–42770–00–CE	APRON COMPLETE 2 CAPOT LATERAL COMPLETE 2		1				UR WHITE UR WHITE
6	90480–14M17	GROMMET PASSE-FIL	3	3				
7	6GR–42775–00–CA	STAY, APRON 2 COUSSINET	1	1				
8	95D95–06020	BOLT, FLANGE DEEP RECESS BOULON FIXATION	2	2				
9	69J–42774–10	STAY, APRON 1 COUSSINET	6	6				
10	90111–06144	BOLT,HEX. SOCKET BUTTON BOULON	15	15				
11	90111–06142	BOLT,HEX. SOCKET BUTTON BOULON	1	1				
12	90173–06001	NUT, SQUARE ECROU, CARRE	2	2				
13	6GR–45141–00–8D	COVER, UPPER CASING CAPUCHON, FOURREAU	1					UR GRAY UR GRAY
	6GR–45141–00–CE	COVER, UPPER CASING CAPUCHON, FOURREAU		1				UR WHITE UR WHITE
14	90480–14M17	GROMMET PASSE-FIL	2	2				
15	90111–06144	BOLT,HEX. SOCKET BUTTON BOULON	4	4				
16	90111–06142	BOLT,HEX. SOCKET BUTTON BOULON	2	2				

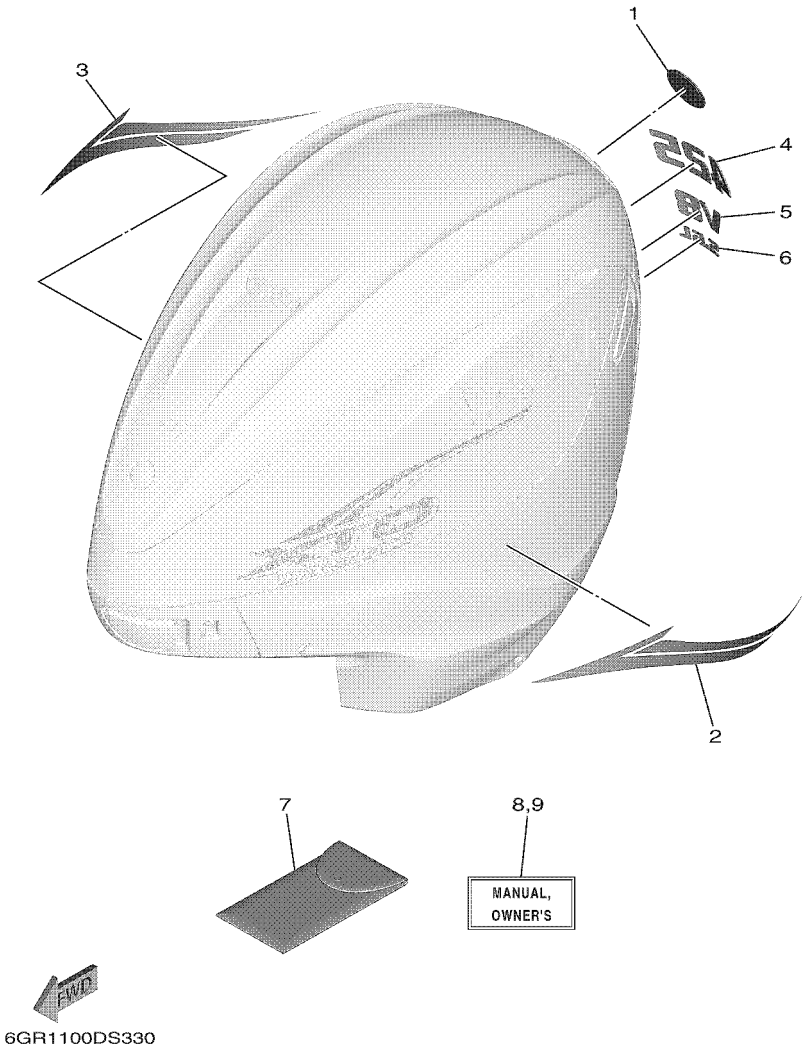

FIG. 32 GRAPHIC & TOOL — GRAPHIQUE & OUTIL

REF. NO.	PART NO. N° PIECES	DESCRIPTION DESCRIPTION	NS	NS2				REMARKS REMARQUES
1	6AW–42697–10	TUNING FORK MARK MARQUE, YAMAHA	1	1				
2	6GR–42783–00	GRAPHIC, SIDE ADHESIF, LATERAL	1	1				
3	6GR–42784–00	GRAPHIC, SIDE ADHESIF, LATERAL	1	1				
4	6GR–4267A–10	GRAPHIC, REAR 2 ADHESIF, ARRIERE 2	1	1				
5	6GR–42678–00	GRAPHIC, REAR ADHESIF, ARRIERE	1	1				
6	6GR–42682–00	MARK, COWLING ADHESIF, CAPOT	1	1				
7	6GR–28100–11	TOOL KIT TROUSSE A OUTILS	1	1				
8	6GR–28199–75–E0	MANUAL,OWNER'S MANUEL D'UTILISATION	1	1				UR (E) UR (E)
	6GR–28199–75–F0	MANUAL,OWNER'S MANUEL D'UTILISATION	1	1				UR (F) UR (F)
	6GR–28199–75–S0	MANUAL,OWNER'S MANUEL D'UTILISATION	1	1				UR (ES) UR (ES)
	6GR–28199–75–G0	MANUAL,OWNER'S MANUEL D'UTILISATION	1	1				UR (D) UR (D)
	6GR–28199–75–D0	MANUAL,OWNER'S MANUEL D'UTILISATION	1	1				UR (NL) UR (NL)
	6GR–28199–75–H0	MANUAL,OWNER'S MANUEL D'UTILISATION	1	1				UR (I) UR (I)
9	6GR–28199–85–K0	MANUAL,OWNER'S MANUEL D'UTILISATION	1	1				UR (DK) UR (DK)
	6GR–28199–85–R0	MANUAL,OWNER'S MANUEL D'UTILISATION	1	1				UR (GR) UR (GR)
	6GR–28199–85–P0	MANUAL,OWNER'S MANUEL D'UTILISATION	1	1				UR (P) UR (P)
	6GR–28199–85–N0	MANUAL,OWNER'S MANUEL D'UTILISATION	1	1				UR (N) UR (N)
	6GR–28199–85–M0	MANUAL,OWNER'S MANUEL D'UTILISATION	1	1				UR (S) UR (S)
	6GR–28199–85–L0	MANUAL,OWNER'S MANUEL D'UTILISATION	1	1				UR (SF) UR (SF)

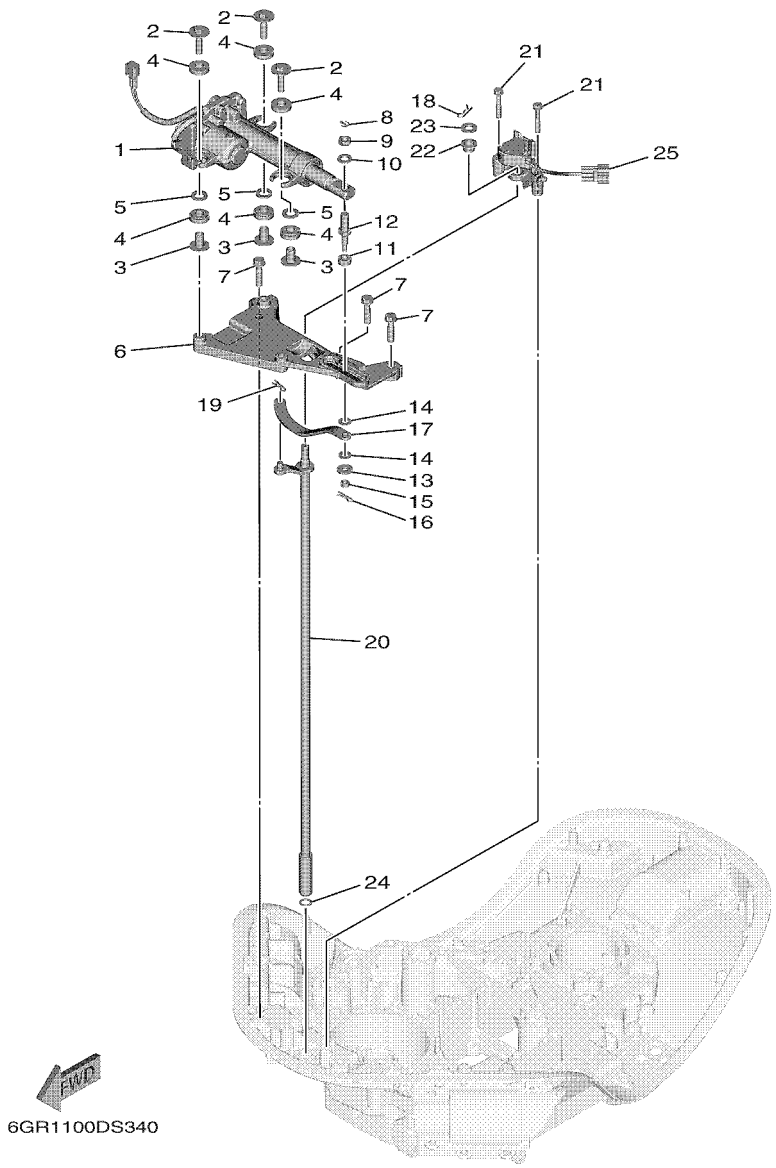

FIG. 33 CONTROL — COMMANDE

REF. NO.	PART NO. N° PIECES	DESCRIPTION DESCRIPTION	NS	NS2				REMARKS REMARQUES
1	6GR–4820A–01	ACTUATOR UNIT ACTUATOR UNIT	1	1				
2	90119–08175	BOLT, WITH WASHER BOULON, AVEC RONDELLE	3	3				
3	90387–08104	COLLAR COLLERETTE	3	3				
4	6CE–85564–00	GROMMET RONDELLE CAOUTCHOUC	6	6				
5	90201–12064	WASHER, PLATE RONDELLE, PLATE	3	3				
6	6GR–44117–00	BRACKET SUPPORT	1	1				
7	97E75–08535	BOLT, HEXAGON W/W DEEP RECESS VIS HEXAGONAL AVC RONDELLE	3	3				
8	91490–20015	PIN. COTTER GOUPILLE	1	1				
9	95380–10700	NUT ECROU	1	1				
10	90201–10048	WASHER, PLATE RONDELLE, PLATE	1	1				
11	6CE–44122–00	BUSHING, SHIFT ROD LEVER DOUILLE, LEVIER D'EMBRAYAGE	1	1				
12	6GR–42195–00	PIN, JOINT 1 GOUPILLE	1	1				
13	90201–06068	WASHER, PLATE RONDELLE, PLATE	1	1				
14	90202–08M41	WASHER, PLATE RONDELLE, PLATE	2	2				
15	90185–06M07	NUT, SELF-LOCKING ECROU,AUTO-BLOQUANT	1	1				
16	90468–18008	CLIP JONC	1	1				
17	6GR–44121–00	LEVER, SHIFT ROD LEVIER, TIGE D'INVERSION	1	1				
18	90468–180A0	CLIP JONC	1	1				
19	90468–18008	CLIP JONC	1	1				
20	6GR–44120–01	HANDLE GEAR SHIFT ASSY LEVIER D'EMBRAYAGE	1	1				
21	97E95–06540	BOLT, HEXAGON W/W DEEP RECESS VIS HEXAGONAL AVC RONDELLE	2	2				
22	90386–12M61	BUSH DOUILLE	1	1				
23	90201–10081	WASHER, PLATE RONDELLE, PLATE	1	1				
24	93210–11073	O-RING JOINT TORIQUE	1	1				
25	6GR–68303–00	SENSOR ASSY SONDE (ENS.)	1	1				

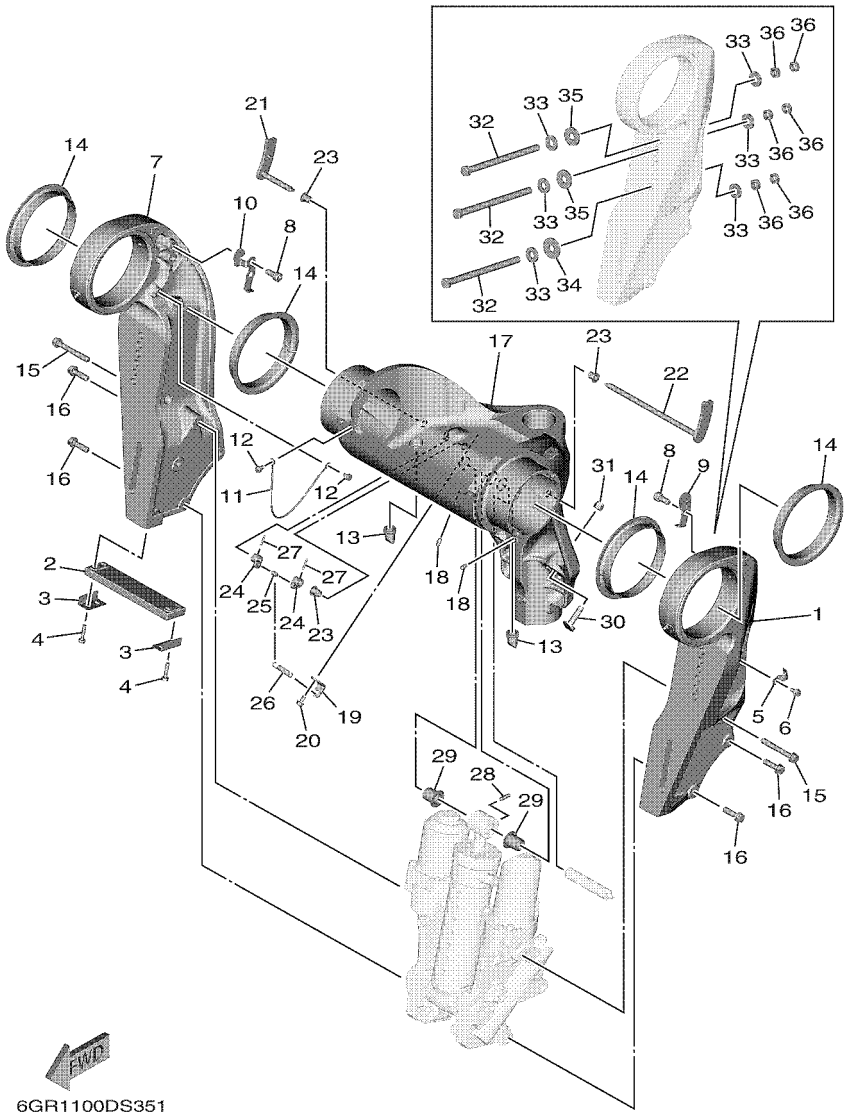

FIG. 34 BRACKET 1 SUPPORT 1

REF. NO.	PART NO. N° PIECES	DESCRIPTION DESCRIPTION	NS	NS2				REMARKS REMARQUES
1	6GR–4311A–00–8D	BRACKET, CLAMP 1, W/NIPPLE PRESSE 1	1					UR GRAY UR GRAY
	6GR–4311A–00–CE	BRACKET, CLAMP 1, W/NIPPLE PRESSE 1		1				UR WHITE UR WHITE
2	6AW–45251–00	ANODE ANODE	1	1				
3	6G5–44526–00	PLATE PLAQUE	2	2				
4	97E95–06530	BOLT, HEXAGON W/W DEEP RECESS VIS HEXAGONAL AVC RONDELLE	4	4				
5	90465–08M63	CLAMP BRIDE	1	1				
6	95D95–06012	BOLT, FLANGE DEEP RECESS BOULON FIXATION	1	1				
7	6GR–4311B–00–8D	BRACKET, CLAMP 2, W/NIPPLE PRESSE 2	1					UR GRAY UR GRAY
	6GR–4311B–00–CE	BRACKET, CLAMP 2, W/NIPPLE PRESSE 2		1				UR WHITE UR WHITE
8	91380–10020	BOLT BOULON	4	4				
9	6GR–4381E–00	BRACKET, 1 SUPPORT, 1	1	1				
10	6GR–4381F–00	BRACKET, 2 SUPPORT, 2	1	1				
11	6GR–82147–00	WIRE, LEAD 5 FIL 5	1	1				
12	97E95–06510	BOLT, HEXAGON W/W DEEP RECESS VIS HEXAGONAL AVC RONDELLE	2	2				
13	61A–42717–00	RUBBER, SEAL 2 JOINT EN CAOUTCHOUC 2	2	2				
14	6GR–43333–00	BUSH. , SWIVEL BRACKET BUISSON. , SUPPORT PIVOTANT	4	4				
15	90119–10064	BOLT, WITH WASHER BOULON, AVEC RONDELLE	2	2				
16	90119–10040	BOLT, WITH WASHER BOULON, AVEC RONDELLE	6	6				
17	6GR–43311–02–8D	BRACKET, SWIVEL 1 SUPPORT, PIVOT 1	1					UR GRAY UR GRAY
	6GR–43311–02–CE	BRACKET, SWIVEL 1 SUPPORT, PIVOT 1		1				UR WHITE UR WHITE
18	93700–06002	NIPPLE, GREASE PION	3	3				
19	6GR–43144–00	HOOK, SPRING CROCHET	1	1				
20	95D95–06012	BOLT, FLANGE DEEP RECESS BOULON FIXATION	1	1				
21	6GR–43181–00	LEVER, TILT STOP 1 LEVIER VERROUILLAGE RELEVAGE 1	1	1				
22	6GR–43185–00	LEVER, TILT STOP 2 LEVIER VERROUILLAGE RELEVAGE 2	1	1				
23	90386–10M16	BUSH DOUILLE	3	3				
24	6G5–43148–00	COLLAR, DISTANCE ENTRETOISE	2	2				

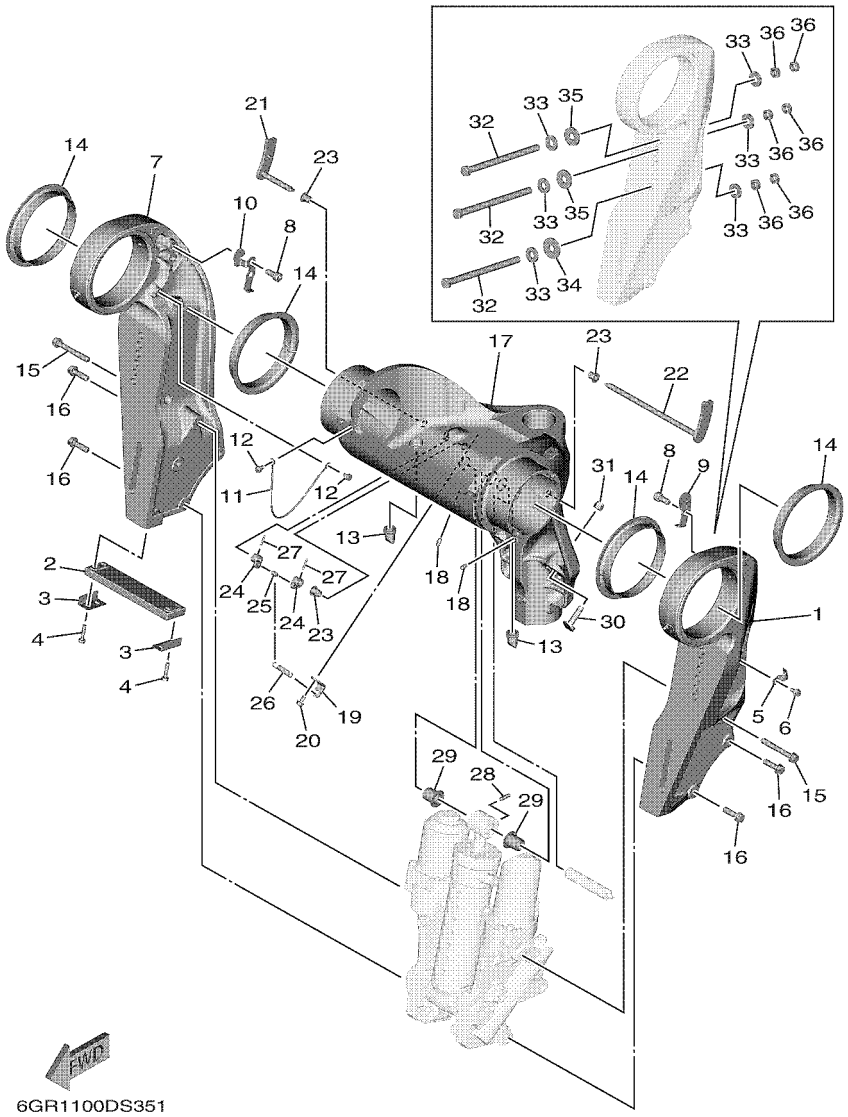

FIG. 34 BRACKET 1 — SUPPORT 1

REF. NO.	PART NO. N° PIECES	DESCRIPTION DESCRIPTION	NS	NS2				REMARKS REMARQUES
25	90249–06M19	PIN GOUPILLE	1	1				
26	90506–16010	SPRING, TENSION RESSORT, TENSION	1	1				
27	91690–30020	PIN, SPRING AGRAFFE	2	2				
28	91690–60022	PIN, SPRING AGRAFFE	1	1				
29	90386–20002	BUSH DOUILLE	2	2				
30	6GR–43376–01	BOLT, THRUST RECEIVER BOULON	2	2				
31	95780–10300	NUT, FLANGE ECROU	2	2				
32	90101–12073	BOLT (180MM) BOULON (180MM)	6	6				
	90101–12072	BOLT (110MM) BOULON (110MM)	2	2				AP AP
	90101–12067	BOLT (150MM) BOULON (150MM)	2	2				AP AP
	90101–12068	BOLT (170MM) BOULON (170MM)	2	2				AP AP
	90101–12073	BOLT (180MM) BOULON (180MM)	2	2				AP AP
	90101–12074	BOLT (200MM) BOULON (200MM)	2	2				AP AP
	90101–12069	BOLT (210MM) BOULON (210MM)	2	2				AP AP
	90101–12070	BOLT (230MM) BOULON (230MM)	2	2				AP AP
33	90201–12060	WASHER, PLATE RONDELLE, PLATE	12	12				
34	90201–12426	WASHER, PLATE RONDELLE, PLATE	2	2				
35	90201–13M19	WASHER, PLATE RONDELLE, PLATE	4	4				
36	95380–12600	NUT ECROU	12	12				

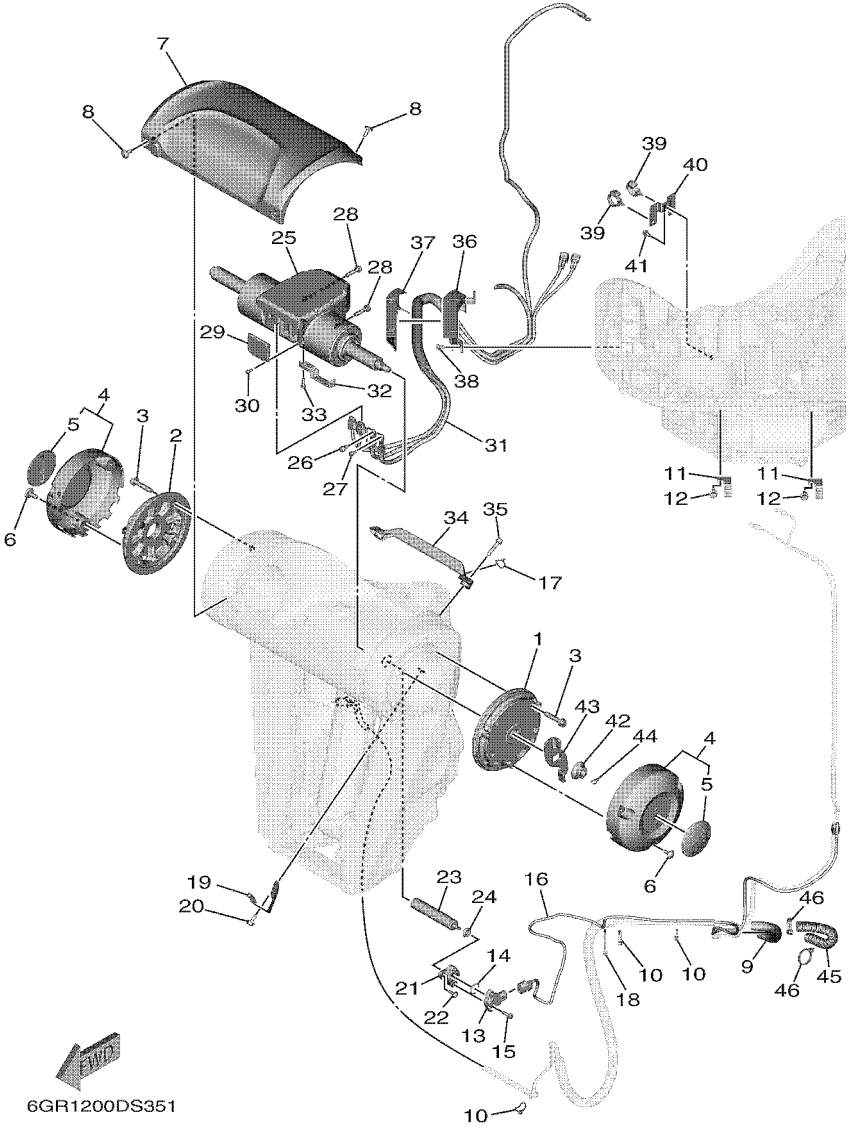

FIG. 35 BRACKET 2 — SUPPORT 2

REF. NO.	PART NO. N° PIECES	DESCRIPTION DESCRIPTION	NS	NS2				REMARKS REMARQUES
1	6GR–43341–00	COVER, SWIVEL SODE 1 COUVERCLE, PIVOTANT COTE 1	1	1				
2	6GR–43342–00	COVER, SWIVEL SODE 2 COUVERCLE, PIVOTANT COTE 2	1	1				
3	90119–08176	BOLT, WITH WASHER BOULON, AVEC RONDELLE	8	8				
4	6GR–W436G–00–8D	SBW SIDE COVER ASSY SBW COUVERCLE LATERAL ASSEMBLE	2					UR GRAY UR GRAY
	6GR–W436G–00–CE	SBW SIDE COVER ASSY SBW COUVERCLE LATERAL ASSEMBLE		2				UR WHITE UR WHITE
5	6DA–42697–00	.TUNING FORK MARK .MARQUE, YAMAHA	1	1				
6	90111–06144	BOLT,HEX. SOCKET BUTTON BOULON	6	6				
7	6GR–43318–00–8D	COVER CAPUCHON	1					UR GRAY UR GRAY
	6GR–43318–00–CE	COVER CAPUCHON		1				UR WHITE UR WHITE
8	90111–06144	BOLT,HEX. SOCKET BUTTON BOULON	4	4				
9	6GR–24864–00	TUBE DURITE	1	1				
10	90465–11M10	CLAMP BRIDE	5	5				
	90465–11M10	CLAMP BRIDE	3	3				6GR-1010059 and following 6GR-1010059 and following
11	90462–10033	CLAMP BRIDE	2	2				
12	95D95–06012	BOLT, FLANGE DEEP RECESS BOULON FIXATION	2	2				
13	6GR–85887–00	SENSOR ANGLE CAPTEUR DE COUPLE	1	1				
14	93210–17MF9	O-RING JOINT TORIQUE	1	1				
15	97595–05516	BOLT, WITH WASHER VIS HEXAGONAL AVC RONDELLE	2	2				
16	6GR–82553–00	EXTENSION, WIRE LEAD EXTENSION, FAISCEAU	1	1				
17	90465–11M10	CLAMP BRIDE	1	1				
18	90464–55002	CLAMP BRIDE	1	1				
19	6GR–4381J–00	PLATE PLAQUE	1	1				
20	95D95–06012	BOLT, FLANGE DEEP RECESS BOULON FIXATION	1	1				
21	6GR–4382A–00	ADAPTOR 1 ADAPTEUR 1	1	1				
22	90149–05044	SCREW VIS	2	2				
23	6GR–43126–00	PIN, UPPER SHOCK MOUNT AXE, SUPERIEUR AMORTISSEUR	1	1				
24	93210–06ME6	O-RING JOINT TORIQUE	1	1				

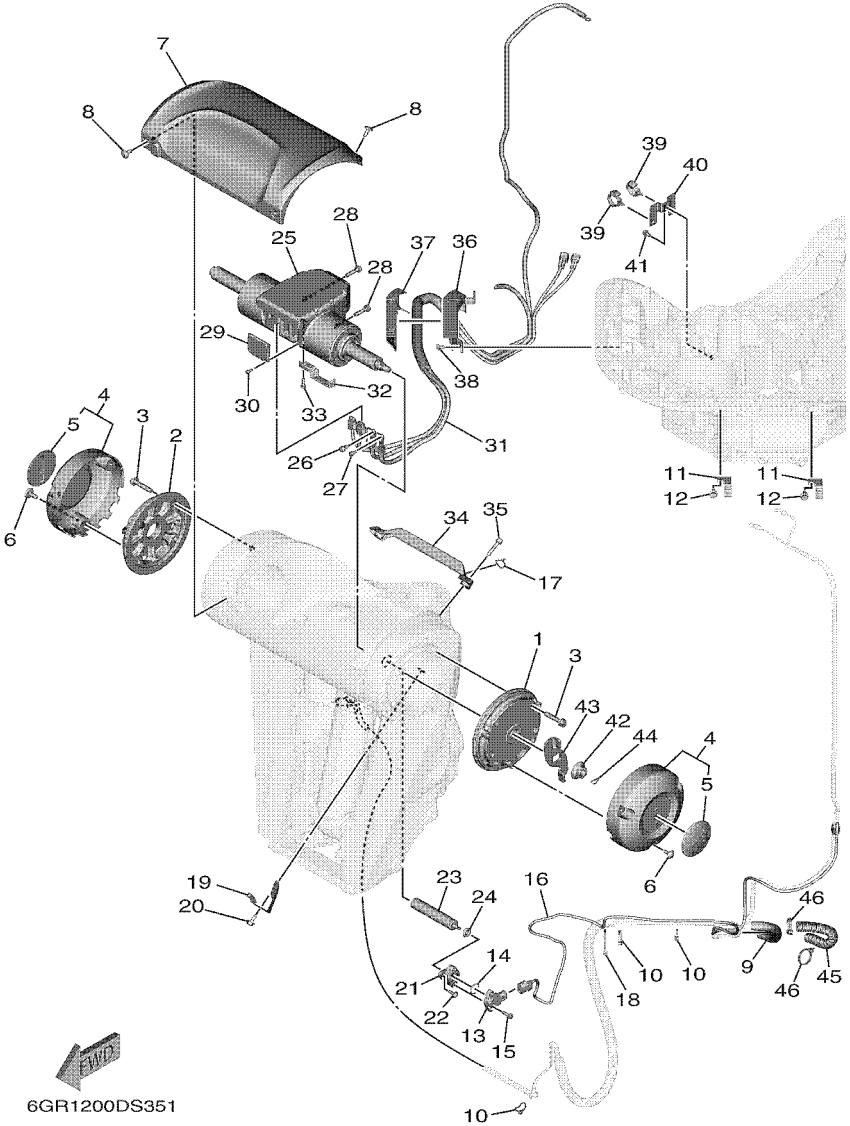

FIG. 35 BRACKET 2 — SUPPORT 2

REF. NO.	PART NO. N° PIECES	DESCRIPTION DESCRIPTION	NS	NS2				REMARKS REMARQUES
25	6GR–42401–13	POWER STEERING CYLINDER ASSY CYLINDRE, DIRECTION ASSISTEE	1	1				
26	6GR–44331–00	BOLT, 1 BOULON, 1	1	1				
27	6GR–44332–00	BOLT, 2 BOULON, 2	1	1				
28	97580–08535	BOLT, WITH WASHER VIS HEXAGONAL AVC RONDELLE	4	4				
29	6GR–42134–00	COVER CAPOT	1	1				
30	91380–04010	BOLT BOULON	4	4				
31	6GR–438A0–02	STEERING, WIRE HARNESS ASSY DIRECTION, FAISCEAU DE FILS CO	1	1				
32	6GR–48538–00	CLAMP, CABLE 1 COLLIER	1	1				
33	97D95–06018	BOLT, HEXAGON DEEP RECESS VIS HEXAGONAL	2	2				
34	6GR–47716–00	COVER COUVERCLE	1	1				
35	90110–06191	BOLT, HEXAGON SOCKET HEAD BOULON, TETE HEXAGONALE CREUSE	2	2				
36	6GR–43121–00	PROTECTOR PROTECTEUR	1	1				
37	6GR–47445–00	PROTECTOR PROTECTEUR	1	1				
38	95D95–06012	BOLT, FLANGE DEEP RECESS BOULON FIXATION	2	2				
39	90464–12183	CLAMP BRIDE	2	2				
40	6GR–48539–00	CLAMP, CABLE 2 COLLIER, CABLE 2	1	1				
41	95D95–06012	BOLT, FLANGE DEEP RECESS BOULON FIXATION	1	1				
42	90179–14009	NUT ECROU	1	1				
43	6GR–43378–10	WASHER RONDELLE	1	1				
44	91490–20025	PIN. COTTER GOUPILLE	1	1				
45	6KN–24864–00	TUBE DURITE	1	1				6GR-1010059 and following 6GR-1010059 and following
46	90464–36005	CLAMP BRIDE	2	2				6GR-1010059 and following 6GR-1010059 and following

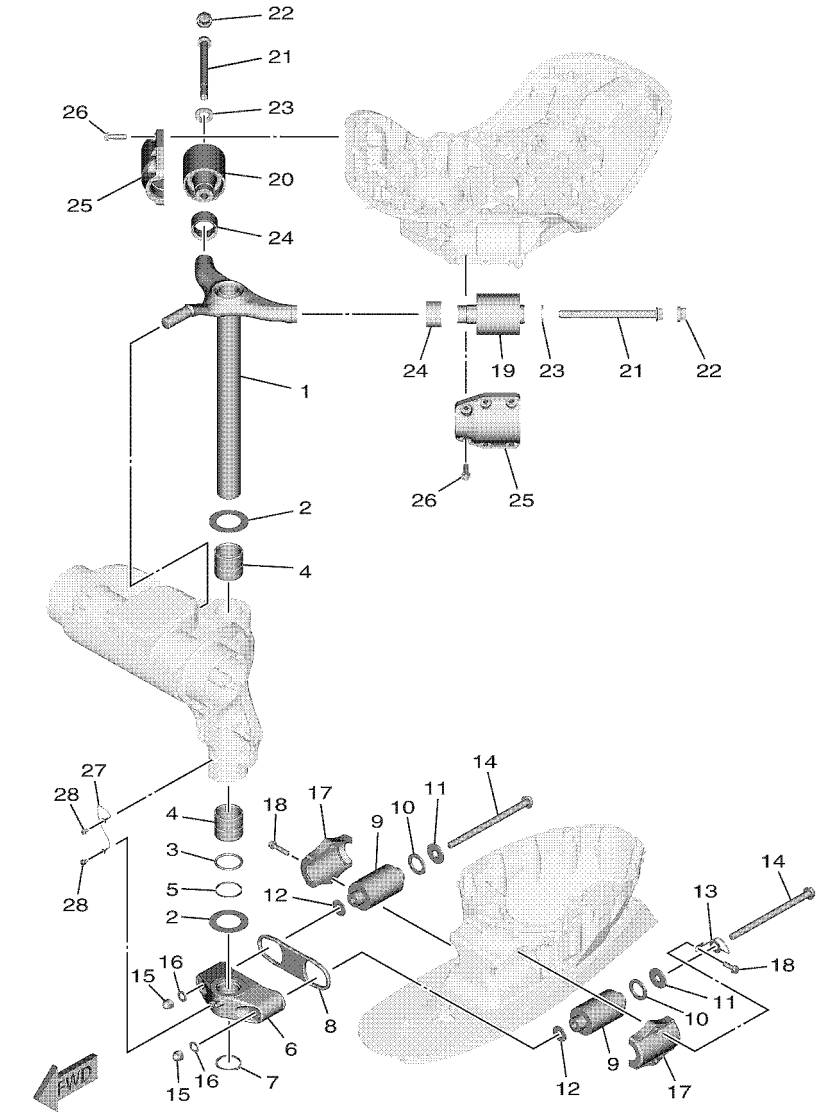

FIG. 36 BRACKET 3 — SUPPORT 3

REF. NO.	PART NO. N° PIECES	DESCRIPTION DESCRIPTION	NS	NS2				REMARKS REMARQUES
1	6GR–42510–01–8D	STEERING BRACKET ASSY DIRECTION SUPPORT (ENS.)	1	1				
2	90201–51014	WASHER, PLATE RONDELLE, PLATE	2	2				
3	93210–49003	O-RING JOINT TORIQUE	1	1				
4	90386–49001	BUSH DOUILLE	2	2				
5	90202–51001	WASHER, PLATE RONDELLE, PLATE	1	1				
6	6GR–44551–00–CA	HOUSING, LOWER MOUNT RUBBER 1 BOITIER, SILENT-BLOC INFERIEUR	1	1				
7	93410–46099	CIRCLIP CIRCLIP	1	1				
8	6GR–44575–01	DAMPER, LOWER MOUNT RUBBER SILENT-BLOC, INFERIEUR	1	1				
9	6AW–44555–00	MOUNT DAMPER, LOWER SIDE SILENT-BLOC, INFERIEUR LATERAL	2	2				
10	90202–32M19	WASHER, PLATE RONDELLE, PLATE	2	2				
11	90201–16M55	WASHER, PLATE RONDELLE, PLATE	2	2				
12	90201–15M58	WASHER, PLATE RONDELLE, PLATE	2	2				
13	6GR–82149–00	WIRE, LEAD 3 FIL 3	1	1				
14	90105–14012	BOLT, FLANGE BOULON, A COLLERETTE	2	2				
15	95380–14800	NUT ECROU	2	2				
16	92995–14600	WASHER RONDELLE	2	2				
17	6AW–44552–00–CA	HOUSING, LOWER MOUNT RUBBER 2 BOITIER, SILENT-BLOC INFERIEUR	2	2				
18	90119–10024	BOLT, WITH WASHER BOULON, AVEC RONDELLE	4	4				
19	6GR–44514–00	MOUNT DAMPER, UPPER SIDE SILENT-BLOC, SUPERIEUR LATERAL	1	1				
20	6GR–44515–00	MOUNT RUBBER, UPPER SIDE SILENT-BLOC, SUPERIEUR LATERAL	1	1				
21	90105–16004	BOLT, FLANGE BOULON, A COLLERETTE	2	2				
22	6GR–44194–01	CAP CAPUCHON	2	2				
23	90201–18030	WASHER, PLATE RONDELLE, PLATE	2	2				
24	6GR–44533–00	DAMPER, UPPER MOUNT RUBBER COUVERCLE, SUSPENSION INFERIEU	2	2				
25	6GR–44511–00–CA	COVER, UPPER MOUNT COUVERCLE, SUSPENSION SUPERIEU	2	2				
26	90119–10058	BOLT, WITH WASHER BOULON, AVEC RONDELLE	12	12				
27	6T4–82117–00	WIRE, LEAD FIL	1	1				

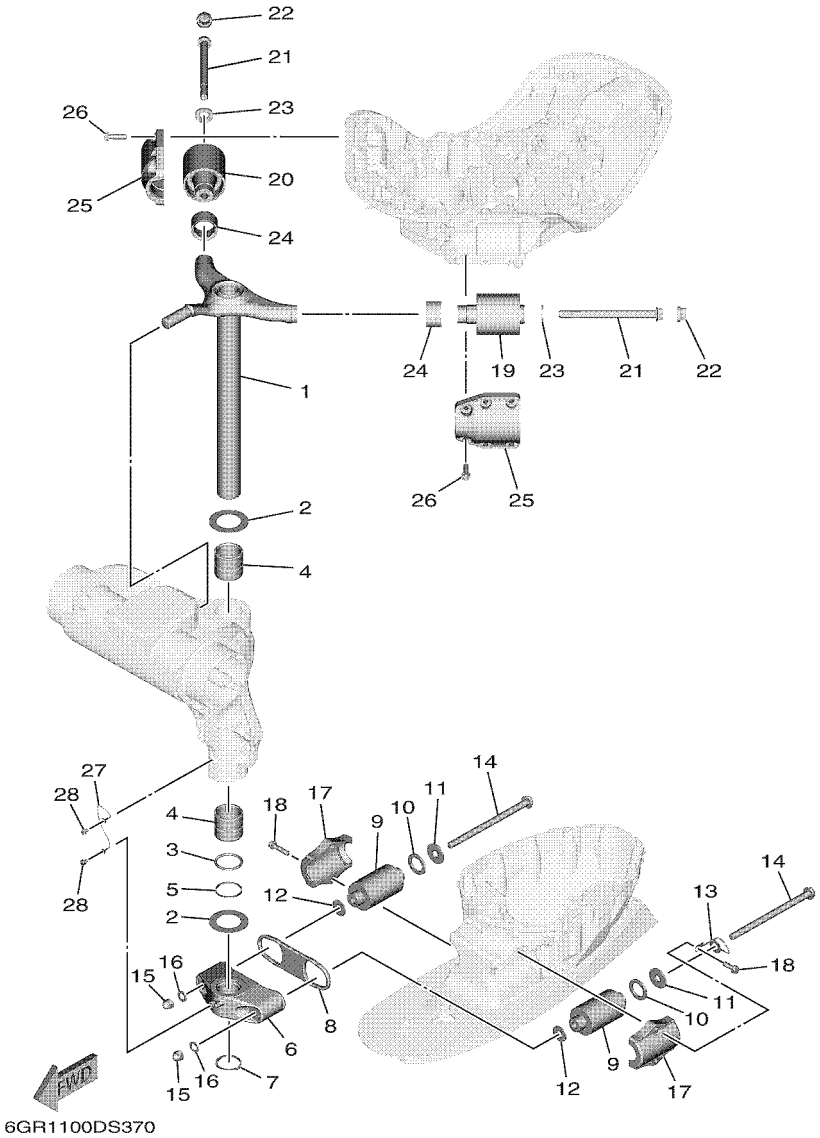

FIG. 36 BRACKET 3 — SUPPORT 3

REF. NO.	PART NO. N° PIECES	DESCRIPTION DESCRIPTION	NS	NS2				REMARKS REMARQUES
28	97E95–06510	BOLT, HEXAGON W/W DEEP RECESS VIS HEXAGONAL AVC RONDELLE	2	2				

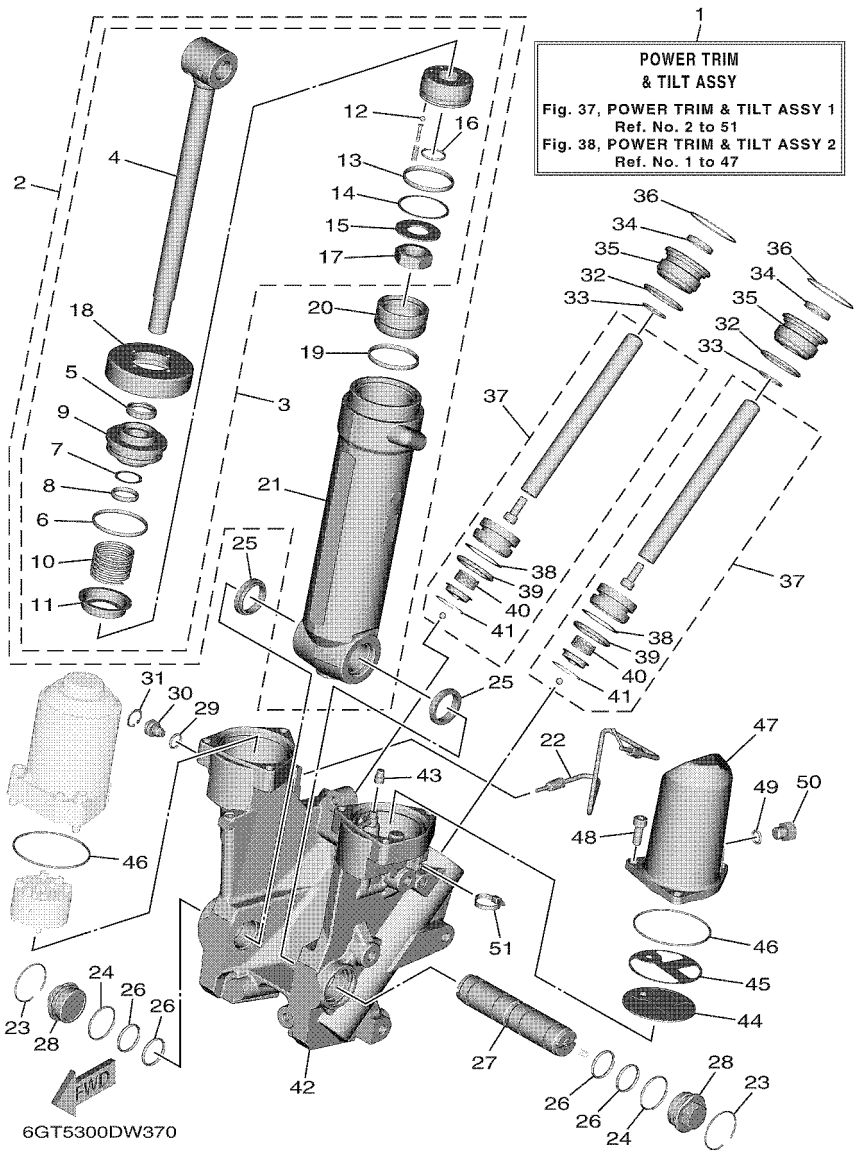

FIG. 37 POWER TRIM & TILT ASSY 1 — PUISSANCE PARER ET INCLINER 1

REF. NO.	PART NO. N° PIECES	DESCRIPTION DESCRIPTION	NS	NS2				REMARKS REMARQUES
1	6GR–43800–08	POWER TRIM & TILT ASSY PUISSANCE PARER ET INCLINER (E	1	1				
2	6GR–43840–00	POWER TILT ASSY PUISSANCE INCLINER (ENS.)	1	1				
3	6GR–43810–00	.TILT PISTON SUB ASSY .INCLINER PISTON AUXILIAIRE(ENS	1	1				
4	6GR–43801–00	..ROD ..TIGE	1	1				
5	6GR–43812–00	..SEAL, DUST ..JOINT	1	1				
6	93210–49046	..O-RING ..JOINT TORIQUE	1	1				
7	6GR–43872–00	..RING, BACK UP ..RESSORT	1	1				
8	6GR–43863–00	..O-RING ..JOINT TORIQUE	1	1				
9	6GR–43811–00	..SCREW, CYLINDER END ..VIS, CYLINDRE RACCORD	1	1				
10	69J–4384H–00	..SPRING ..RESSORT	1	1				
11	6GR–4382E–00	..ADAPTOR 2 ..ADAPTEUR 2	1	1				
12	93505–32038	..BALL ..BILLE	4	4				
13	93210–44006	..O-RING ..JOINT TORIQUE	1	1				
14	6GR–43871–00	..RING, BACK UP ..SEGMENT	1	1				
15	90201–18029	..WASHER, PLATE ..RONDELLE, PLATE	1	1				
16	93210–18397	..O-RING ..JOINT TORIQUE	1	1				
17	6GR–43654–00	..NUT 1 ..ECROU 1	1	1				
18	6GR–43827–00	..RING SET ..BILLE	1	1				
19	93210–44006	.O-RING .JOINT TORIQUE	1	1				
20	6GR–43814–00	.PISTON, FREE .PISTON	1	1				
21	6GR–4380K–00	.CYLINDER, TILT SUB ASSY .CYLINDRE	1	1				
22	6GR–43835–00	PIPE TUYAU	1	1				
23	93450–42110	CIRCLIP CIRCLIP	2	2				
24	6GR–43862–00	O-RING JOINT TORIQUE	2	2				
25	6GR–4388F–00	SPACER ENTRETOISE	2	2				
26	6GR–43861–00	O-RING JOINT TORIQUE	4	4				
27	6GR–43818–00	PIN, LOWER SHOCK MOUNT AXE, INFERIEUR AMORTISSEUR	1	1				

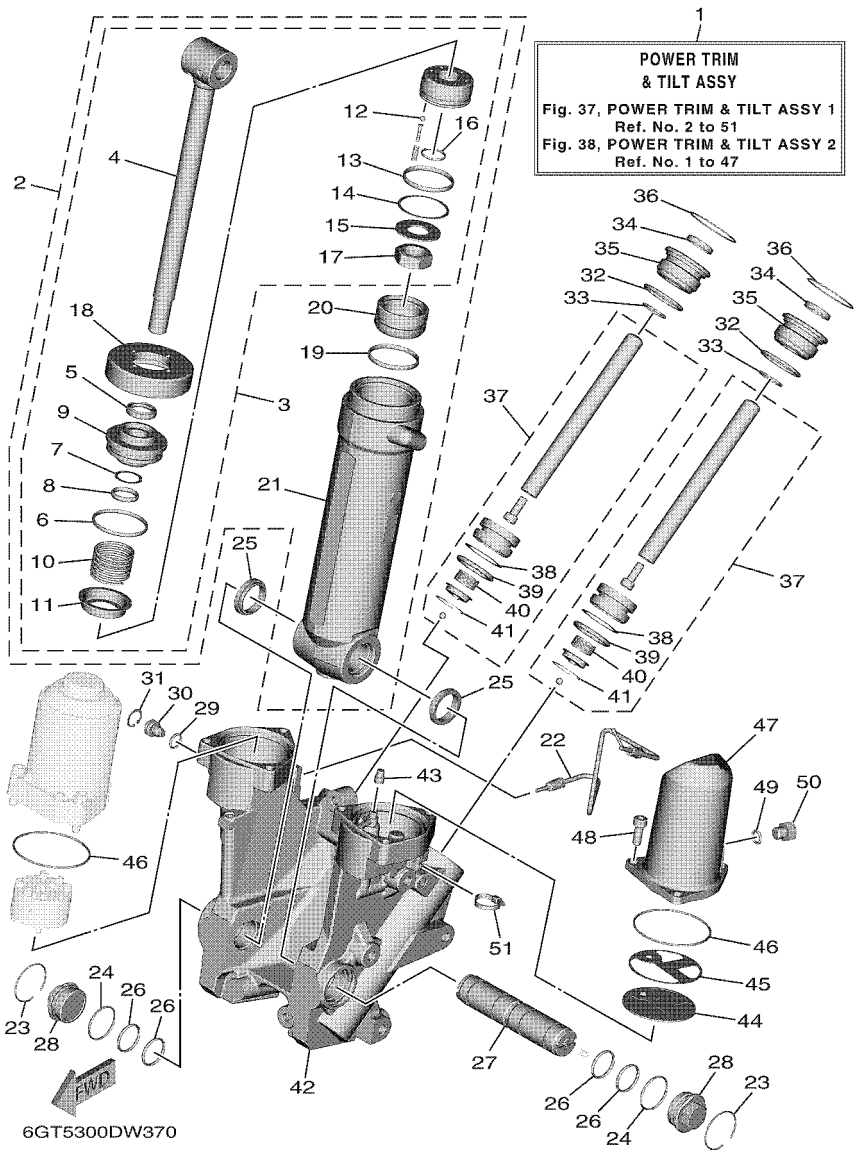

FIG. 37 POWER TRIM & TILT ASSY 1 — PUISSANCE PARER ET INCLINER 1

REF. NO.	PART NO. N° PIECES	DESCRIPTION DESCRIPTION	NS	NS2				REMARKS REMARQUES
28	6GR–22472–00	CAP, CASE COUVERCLE DE BOITIER	2	2				
29	93210–12327	O-RING JOINT TORIQUE	1	1				
30	6GR–43845–00	SCREW, MANUAL RELEASE VIS	1	1				
31	61A–43876–01	RING, SNAP RESSORT	1	1				
32	61A–43861–00	O-RING JOINT TORIQUE	2	2				
33	6D8–43863–00	O-RING JOINT TORIQUE	2	2				
34	63P–43812–20	SEAL, DUST JOINT	2	2				
35	61A–43821–02	SCREW, TRIM CYLINDER END VIS	2	2				
36	93440–52N50	CIRCLIP CIRCLIP	2	2				
37	6GR–43820–00	TRIM PISTON SUB ASSY PARER PISTON AUXILIAIRE (ENS.)	2	2				
38	61A–43874–00	.RING, BACK UP .RESSORT	1	1				
39	61A–43864–00	.O-RING .JOINT TORIQUE	1	1				
40	61A–4384H–10	.SPRING .RESSORT	1	1				
41	61A–43875–10	.RING, SNAP .RESSORT	1	1				
42	6GR–4380L–02	HOUSING, TRIM & TILT SUB ASSY CARTER	1	1				
43	6GR–4388H–00	PLUG BOUCHON	1	1				
44	69J–43817–00	FILTER 2 FILTRE 2	1	1				
45	69J–4388F–00	SPACER ENTRETOISE	1	1				
46	93210–66001	O-RING JOINT TORIQUE	2	2				
47	6GR–43828–00	BODY, RESERVOIR CORPS	1	1				
48	69J–43888–00	BOLT, SOCKET BOULON	3	3				
49	93210–09165	O-RING JOINT TORIQUE	1	1				
50	6EK–43829–00	PLUG, RESERVOIR BOUCHON	1	1				
51	90465–11M10	CLAMP BRIDE	1	1				

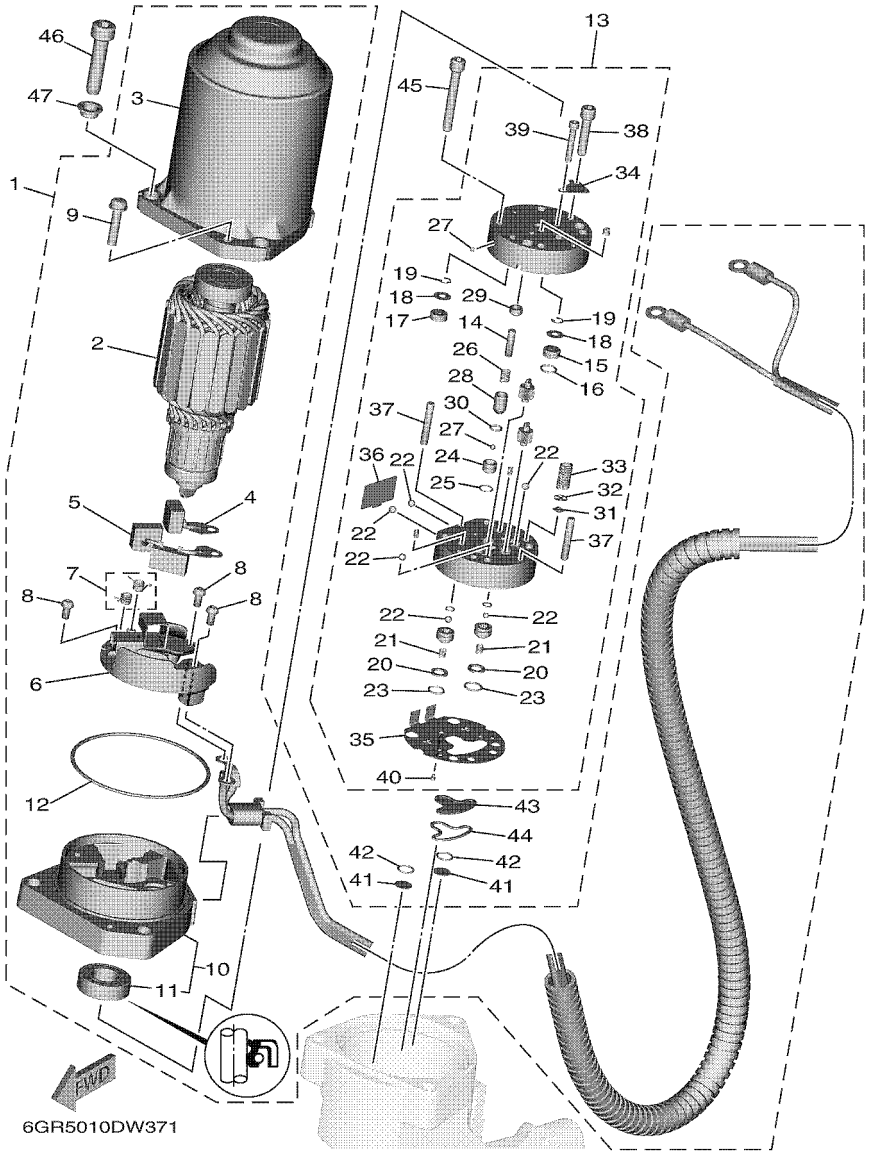

FIG. 38 POWER TRIM & TILT ASSY 2 — PUISSANCE PARER ET INCLINER 2

REF. NO.	PART NO. N° PIECES	DESCRIPTION DESCRIPTION	NS	NS2				REMARKS REMARQUES
1	6GR–43880–02	MOTOR ASSY MOTEUR (ENS.)	1	1				
2	6GR–43805–00	.ARMATURE ASSY .INDUIT (ENS.)	1	1				
3	6GR–43804–00	.STATOR ASSY .STATOR (ENS.)	1	1				
4	6GR–43892–00	.BRUSH 2 .BALAI 2	1	1				
5	6GR–82181–00	.CIRCUIT BREAKER COMP. .RUPTEUR COMPLET	1	1				
6	6GR–4380F–00	.PLATE, BRUSH HOLDER .PLAQUE	1	1				
7	6GR–4386K–00	.SPRING, BRUSH .RESSORT, BALAI	1	1				
8	97602–04310	.SCREW, PAN HEAD WITH WASHER .VIS, AVEC RONDELLE	4	4				
9	67C–43879–10	.SCREW, WITH WASHER .VIS, AVEC RONDELLE	2	2				
10	6GR–43881–02	.FRAME, END .BATI	1	1				
11	6GR–43882–01	..OIL SEAL ..JOINT SPI	1	1				
12	6GR–43864–01	.O-RING .JOINT TORIQUE	1	1				
13	6GR–43830–00	GEAR PUMP ASSY POMPE A PIGNON (ENS.)	1	1				
14	93603–08072	.PIN, DOWEL .CLAVETTE	1	1				
15	6CJ–43841–00	.PISTON, SHUTTLE .PISTON	1	1				
16	6H1–43883–00	.O-RING .JOINT TORIQUE	1	1				
17	6CJ–4384M–00	.PISTON, SHUTTLE 2 .PISTON 2	1	1				
18	69A–4384F–00	.SEAL, MAIN VALVE .JOINT	2	2				
19	99002–03600	.CIRCLIP .CIRCLIP	2	2				
20	6C6–4387G–00	.WASHER .RONDELLE	2	2				
21	6C6–43853–00	.SPRING, MAIN VALVE .RESSORT	2	2				
22	93505–32038	.BALL .BILLE	6	6				
23	69J–4389J–00	.O-RING .JOINT TORIQUE	2	2				
24	6GR–43851–00	.SEAT, RELIEF VALVE .SIEGE	1	1				
25	93210–064A5	.O-RING .JOINT TORIQUE	1	1				
26	6C5–43855–10	.SPRING, UP RELIEF .RESSORT	1	1				
27	93501–08001	.BALL .BILLE	2	2				

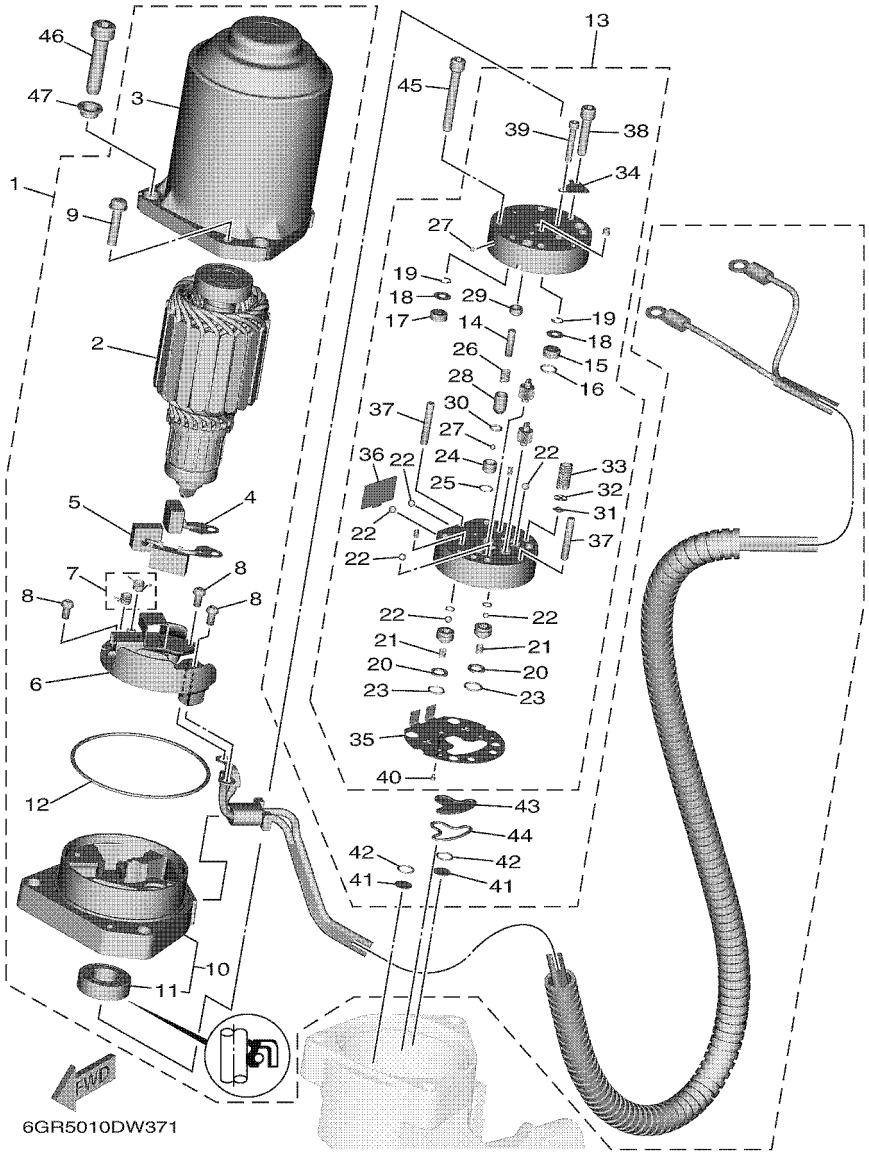

FIG. 38 POWER TRIM & TILT ASSY 2 — PUISSANCE PARER ET INCLINER 2

REF. NO.	PART NO. N° PIECES	DESCRIPTION DESCRIPTION	NS	NS2				REMARKS REMARQUES
28	6D8–43844–00	.PIN, VALVE SUPPORT .GOUPILLE	1	1				
29	6D8–43843–00	.SCREW, VALVE LOCK .VIS	1	1				
30	93210–04N51	.O-RING .JOINT TORIQUE	1	1				
31	6H1–4384G–11	.SEAL, RELIEF VALVE .JOINT	1	1				
32	6H1–43844–10	.PIN, VALVE SUPPORT .GOUPILLE	1	1				
33	6GR–43856–00	.SPRING, DOWN RELIEF .RESSORT	1	1				
34	6D8–4382L–00	.CAP, RELIEF VALVE .CAPUCHON	1	1				
35	6GR–43895–00	.SEAT, RELIEF VALVE .SIEGE	1	1				
36	6C5–43854–00	.SPRING, MANUAL RELEASE .RESSORT	1	1				
37	93604–26256	.PIN, DOWEL .CLAVETTE	2	2				
38	91318–05030	.BOLT .BOULON	2	2				
39	91318–03025	.BOLT .BOULON	2	2				
40	91318–03005	.BOLT .BOULON	1	1				
41	6C6–43817–00	FILTER 2 FILTRE 2	2	2				
42	69J–4389J–00	O-RING JOINT TORIQUE	2	2				
43	6C5–43816–00	FILTER 1 FILTRE 1	1	1				
44	6C5–4380G–00	PLATE PLAQUE	1	1				
45	91318–05045	BOLT BOULON	4	4				
46	90110–08M05	BOLT, HEXAGON SOCKET HEAD BOULON, TETE HEXAGONALE CREUSE	3	3				
47	6GR–23113–00	COLLAR COLLIER	3	3				

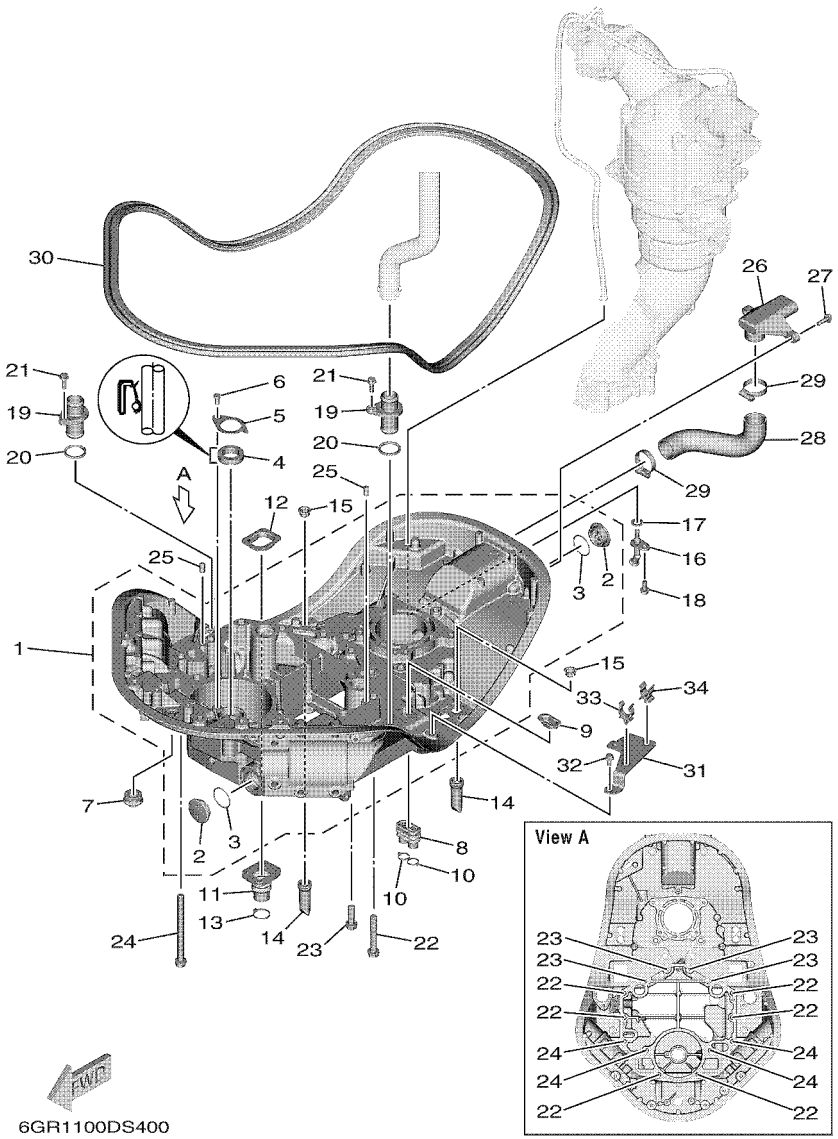

FIG. 39 UPPER CASING 1 — FOURREAU 1

REF. NO.	PART NO. N° PIECES	DESCRIPTION DESCRIPTION	NS	NS2				REMARKS REMARQUES
1	6GR–41137–00	GUIDE, EXHAUST COLLECTEUR D'ECHAPPEMENT	1	1				
2	90340–32011	.PLUG, STRAIGHT SCREW .PLOT, FILETE DROIT	2	2				
3	93210–32172	.O-RING .JOINT TORIQUE	2	2				
4	93102–26004	OIL SEAL JOINT SPY	1	1				
5	6GR–41297–00	WASHER, 1 RONDELLE 1	1	1				
6	97D95–06012	BOLT, HEXAGON DEEP RECESS VIS HEXAGONAL	1	1				
7	6AW–42724–01	GROMMET PASSE-FIL	1	1				
8	6H1–42726–22	GROMMET PASSE-FIL	2	2				
9	6BG–42384–00	SEAL, CAP JOINT, CAPUCHON	2	2				
10	90465–11M10	CLAMP BRIDE	4	4				
11	6GR–42724–01	GROMMET PASSE-FIL	1	1				
12	6GR–42384–00	SEAL, CAP JOINT, CAPUCHON	1	1				
13	90465–11M59	CLAMP BRIDE	1	1				
14	6DA–42717–01	RUBBER, SEAL 2 JOINT EN CAOUTCHOUC 2	4	4				
15	6DA–42384–00	SEAL, CAP JOINT, CAPUCHON	4	4				
16	6GR–44391–00	NIPPLE, HOSE RACCORD D'ESSENCE	1	1				
17	60V–42747–10	PAD PASTILLE	1	1				
18	95D95–06016	BOLT, FLANGE DEEP RECESS BOULON FIXATION	1	1				
19	6GR–12584–00	JOINT, HOSE 3 JOINT DE TUYAU 3	2	2				
20	6GR–44366–01	DAMPER, WATER SEAL 2 JOINT, TUBE D'EAU 2	2	2				
21	95D95–06020	BOLT, FLANGE DEEP RECESS BOULON FIXATION	2	2				
22	97E75–10570	BOLT, HEXAGON W/W DEEP RECESS VIS HEXAGONAL AVC RONDELLE	6	6				
23	90119–10040	BOLT, WITH WASHER BOULON, AVEC RONDELLE	4	4				
24	90119–10075	BOLT, WITH WASHER BOULON, AVEC RONDELLE	4	4				
25	93608–16M16	PIN, DOWEL AXE	2	2				
26	6GR–14753–00	SILENCER, EXHAUST SIELENCIEUX, ECHAPPEMENT	1	1				
27	95D95–06020	BOLT, FLANGE DEEP RECESS BOULON FIXATION	2	2				

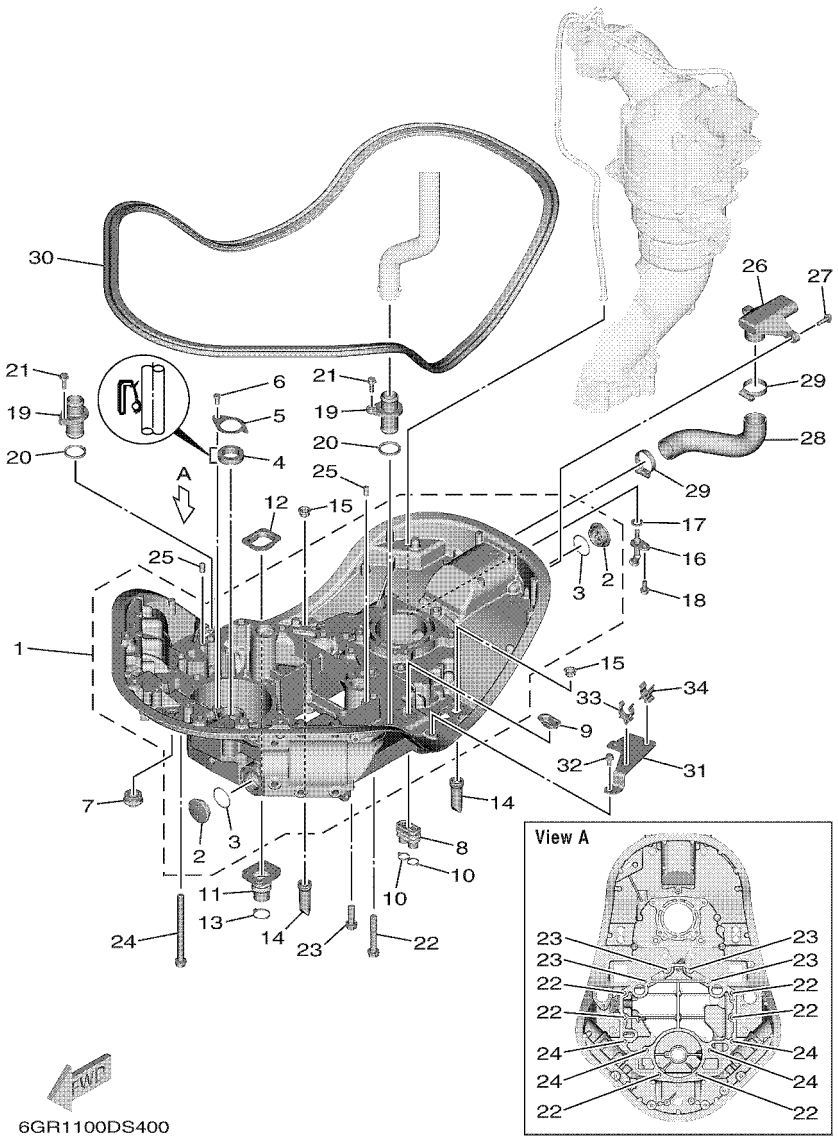

FIG. 39 UPPER CASING 1 — FOURREAU 1

REF. NO.	PART NO. N° PIECES	DESCRIPTION DESCRIPTION	NS	NS2				REMARKS REMARQUES
28	6GR–45135–00	PIPE TUYAU	1	1				
29	90450–35003	HOSE CLAMP ASSY BRIDE, DE DURITE	2	2				
30	6GR–42716–00	RUBBER SEAL 1 JOINT EN CAOUTCHOUC 1	1	1				
31	6GR–82398–00	PLATE 3 PLAQUETTE 3	1	1				
32	95D95–06012	BOLT, FLANGE DEEP RECESS BOULON FIXATION	2	2				
33	90464–19M45	CLAMP BRIDE	1	1				
34	90464–12015	CLAMP BRIDE	1	1				

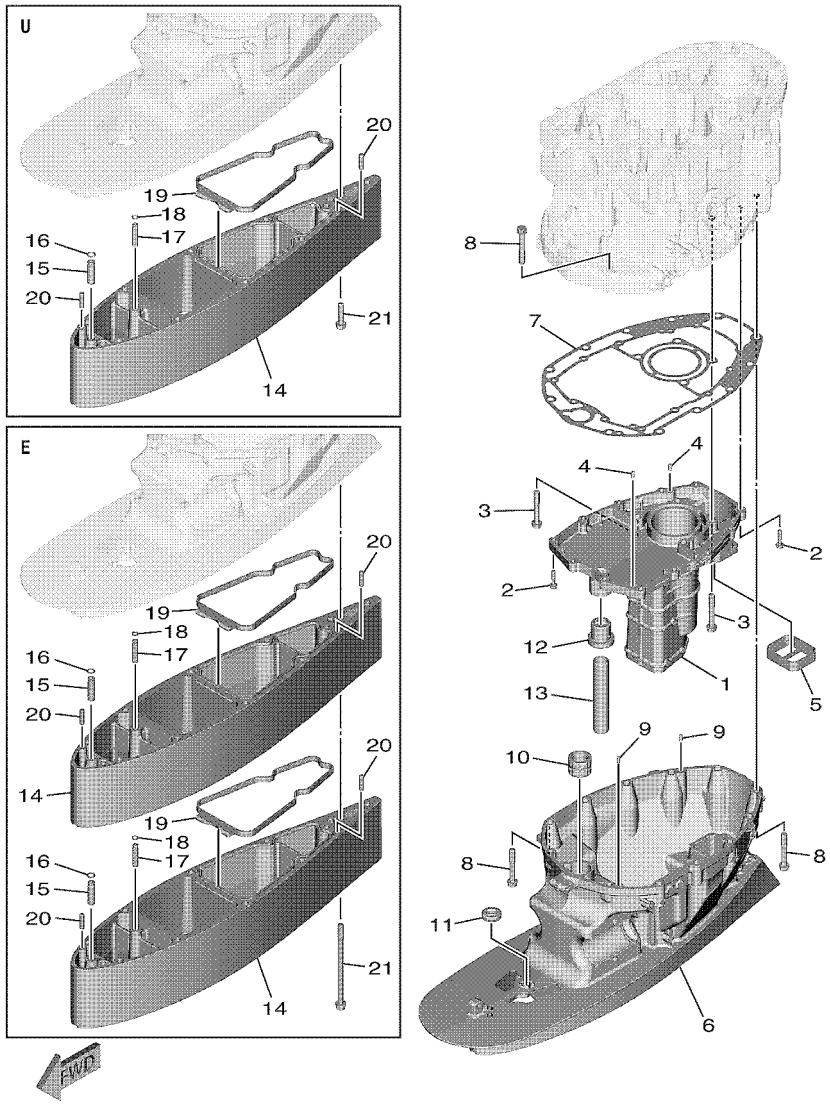

FIG. 40 UPPER CASING 2 — FOURREAU 2

REF. NO.	PART NO. N° PIECES	DESCRIPTION DESCRIPTION	NS	NS2				REMARKS REMARQUES
1	6GR–14711–01	MUFFLER 1 POT D'ECHAPPEMENT 1	1	1				
2	95D95–06030	BOLT, FLANGE DEEP RECESS BOULON FIXATION	12	12				
3	97E75–10570	BOLT, HEXAGON W/W DEEP RECESS VIS HEXAGONAL AVC RONDELLE	4	4				
4	93606–12019	PIN, DOWEL GOUPILLE	2	2				
5	6GR–45127–00	SEAL JOINT	1	1				
6	6GR–45111–00–8D	CASING, UPPER FOURREAU	1					UR GRAY UR GRAY
	6GR–45111–00–CE	CASING, UPPER FOURREAU		1				UR WHITE UR WHITE
7	6GR–45113–00	GASKET, UPPER CASING JOINT, TUBE D'ARBRE	1	1				
8	97E75–10570	BOLT, HEXAGON W/W DEEP RECESS VIS HEXAGONAL AVC RONDELLE	12	12				
9	93606–12019	PIN, DOWEL GOUPILLE	2	2				
10	6GR–45318–00	BUSHING, DRIVE SHAFT DOUILLE, ARBRE MOTEUR	1	1				
11	6GR–44521–00	SEAL JOINT	1	1				
12	6GR–44367–01	DAMPER, WATER SEAL 3 JOINT TUBE D'EAU 3	1	1				
13	90440–27001	PIPE DURITE	1	1				UR X(25.2") UR X(25.2")
	90440–27002	PIPE DURITE	1	1				UR U(30.2") UR U(30.2")
	90440–27003	PIPE DURITE	1	1				UR E(35.2") UR E(35.2")
14	6GR–45211–00–8D	EXTENSION EXTENSION	1					UR GRAY,U(30.2") UR GRAY,U(30.2")
	6GR–45211–00–8D	EXTENSION EXTENSION	2					UR GRAY,E(35.2") UR GRAY,E(35.2")
	6GR–45211–00–CE	EXTENSION EXTENSION		1				UR WHITE,U(30.2") UR WHITE,U(30.2")
	6GR–45211–00–CE	EXTENSION EXTENSION		2				UR WHITE,E(35.2") UR WHITE,E(35.2")
15	6GR–45398–00	NIPPLE, 1 RACCORD, 1	1	1				UR U(30.2") UR U(30.2")
	6GR–45398–00	NIPPLE, 1 RACCORD, 1	2	2				UR E(35.2") UR E(35.2")
16	93210–10010	O-RING JOINT TORIQUE	1	1				UR U(30.2") UR U(30.2")
	93210–10010	O-RING JOINT TORIQUE	2	2				UR E(35.2") UR E(35.2")
17	6GR–45399–00	NIPPLE, 2 RACCORD, 2	1	1				UR U(30.2") UR U(30.2")
	6GR–45399–00	NIPPLE, 2 RACCORD, 2	2	2				UR E(35.2") UR E(35.2")
18	93210–07100	O-RING JOINT TORIQUE	1	1				UR U(30.2") UR U(30.2")

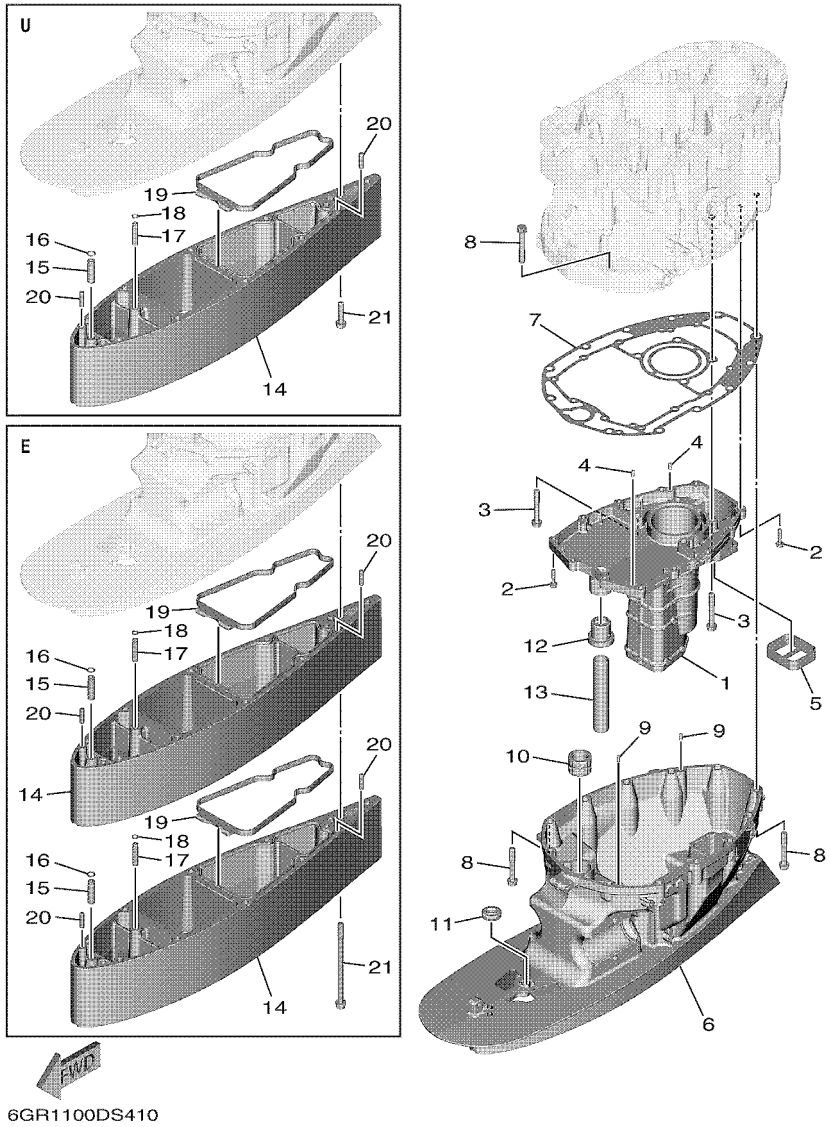

FIG. 40 UPPER CASING 2 — FOURREAU 2

REF. NO.	PART NO. N° PIECES	DESCRIPTION DESCRIPTION	NS	NS2				REMARKS REMARQUES
18	93210–07100	O-RING JOINT TORIQUE	2	2				UR E(35.2") UR E(35.2")
19	6GR–45375–01	DAMPER, SEAL BOURRELET, CAOUTCHOUC	1	1				UR U(30.2") UR U(30.2")
	6GR–45375–01	DAMPER, SEAL BOURRELET, CAOUTCHOUC	2	2				UR E(35.2") UR E(35.2")
20	99480–08030	PIN GOUPILLE	2	2				UR U(30.2") UR U(30.2")
	99480–08030	PIN GOUPILLE	4	4				UR E(35.2") UR E(35.2")
21	90119–10024	BOLT, WITH WASHER BOULON, AVEC RONDELLE	1	1				UR U(30.2") UR U(30.2")
	90119–10009	BOLT, WITH WASHER BOULON, AVEC RONDELLE	1	1				UR E(35.2") UR E(35.2")

FIG. 41 UPPER CASING 3 — FOURREAU 3

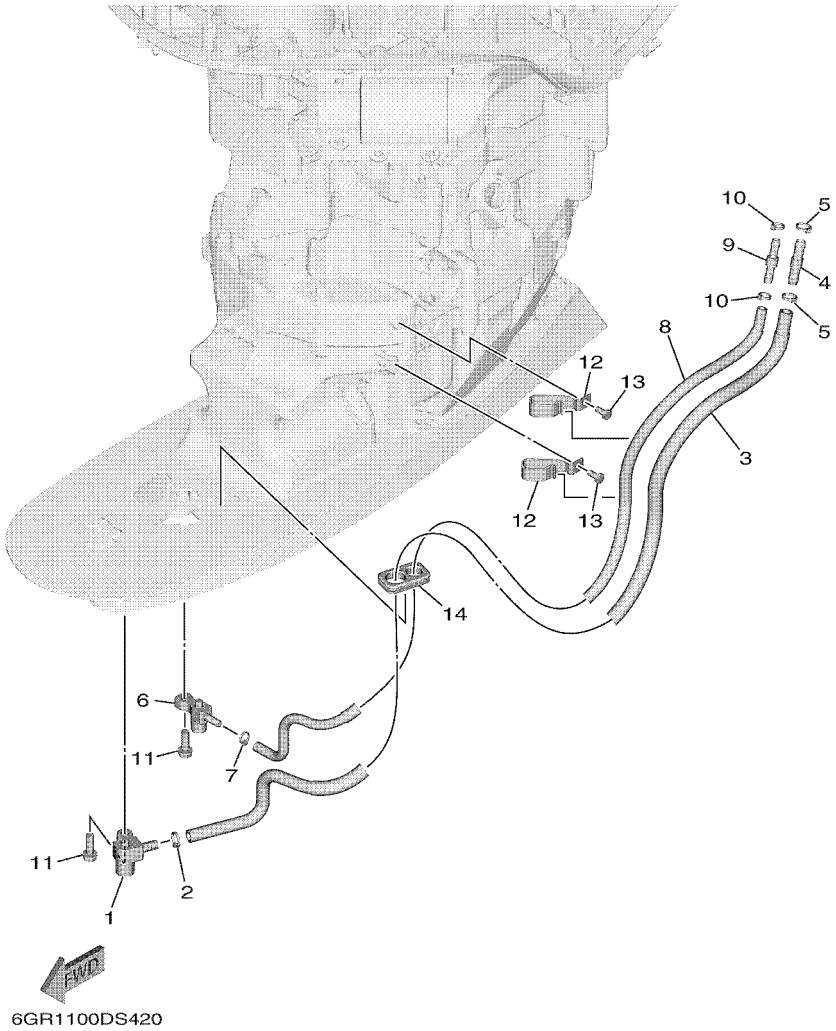

REF. NO.	PART NO. N° PIECES	DESCRIPTION DESCRIPTION	NS	NS2				REMARKS REMARQUES
1	6GR–45368–00	JOINT, HOSE 1 JOINT DE TUYAU 1	1	1				
2	90465–11M10	CLAMP BRIDE	1	1				
3	6GR–4383K–00	HOSE, OIL 1 DURITE A HUILE	1	1				
4	6AW–42785–00	PIPE DURITE	1	1				
5	90465–11M10	CLAMP BRIDE	2	2				
6	6GR–45369–00	JOINT, HOSE 2 JOINT DE TUYAU 2	1	1				
7	90465–11M10	CLAMP BRIDE	1	1				
8	6GR–2318F–00	HOSE, AIR TUYAU A AIR	1	1				
9	6E5–24379–00	PIPE, JOINT 4 DURITE RACCORDEMENT 4	1	1				
10	90465–11M10	CLAMP BRIDE	2	2				
11	97E95–08525	BOLT, HEXAGON W/W DEEP RECESS VIS HEXAGONAL AVC RONDELLE	2	2				
12	6GR–12491–00	CLAMP 1 COLLIER 1	2	2				
13	97D95–06012	BOLT, HEXAGON DEEP RECESS VIS HEXAGONAL	2	2				
14	6GR–45159–01	DAMPER CAOUTCHOUC, JOINT	1	1				

FIG. 42 OIL PAN — VENTILATEUR D'HUILE

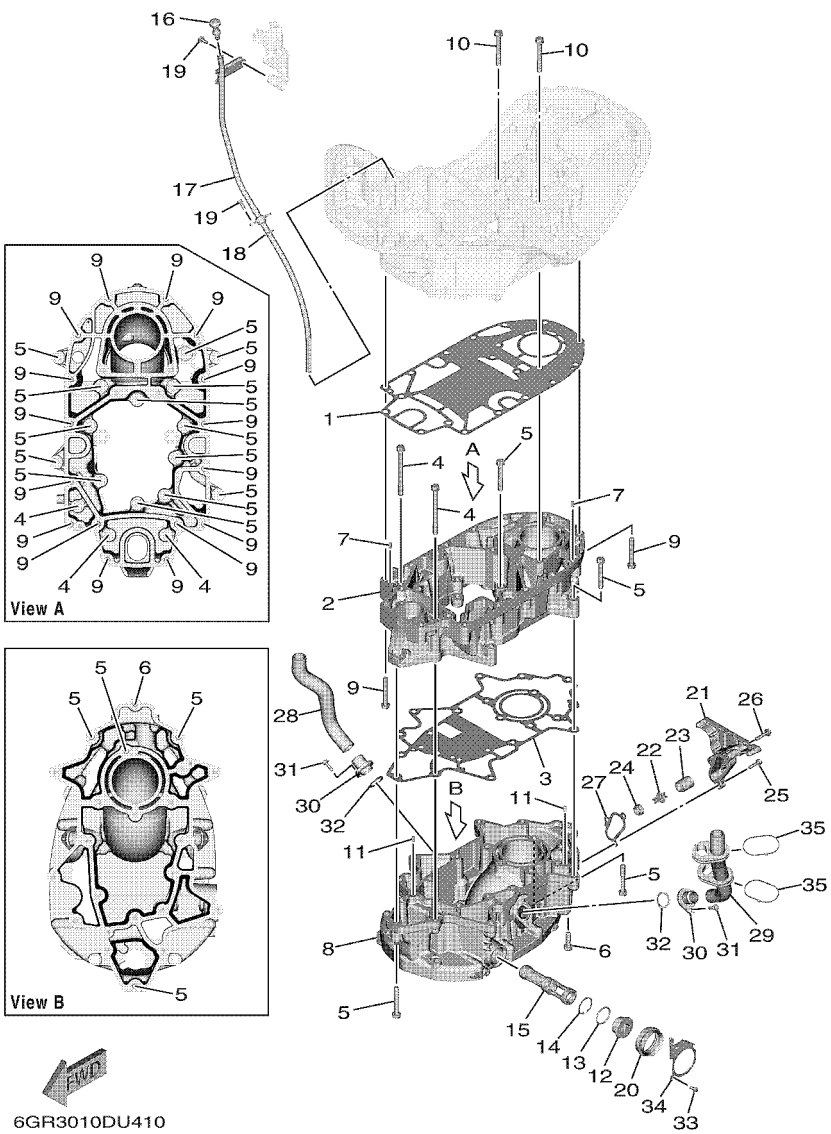

REF. NO.	PART NO. N° PIECES	DESCRIPTION DESCRIPTION	NS	NS2				REMARKS REMARQUES
1	6GR–15312–00	GASKET, OIL PAN JOINT DE VENTILATEUR D'HUILE	1	1				
2	6GR–1531B–01	OIL PAN 2 VENTILATEUR D'HUILE 2	1	1				
3	6GR–1531C–00	GASKET, OIL PAN 2 JOINT DE VENTILATEUR D'HUILE 2	1	1				
4	90119–10074	BOLT, WITH WASHER BOULON, AVEC RONDELLE	3	3				
5	97E75–10570	BOLT, HEXAGON W/W DEEP RECESS VIS HEXAGONAL AVC RONDELLE	18	18				
6	90119–10040	BOLT, WITH WASHER BOULON, AVEC RONDELLE	1	1				
7	93606–12019	PIN, DOWEL GOUPILLE	2	2				
8	6GR–15311–01	OIL PAN VENTILATEUR D'HUILE	1	1				
9	97E75–10570	BOLT, HEXAGON W/W DEEP RECESS VIS HEXAGONAL AVC RONDELLE	16	16				
10	97E75–10580	BOLT, HEXAGON W/W DEEP RECESS VIS HEXAGONAL AVC RONDELLE	4	4				
11	93606–12019	PIN, DOWEL GOUPILLE	2	2				
12	6GR–15351–00	PLUG, DRAIN PLOT, VIDANGE	1	1				
13	93210–34633	O-RING JOINT TORIQUE	1	1				
14	93420–36M01	CIRCLIP CIRCLIP, TYPE S	1	1				
15	6GR–13411–00	STRAINER, OIL FILTRE, HUILE	1	1				
16	6GR–15362–00	PLUG, OIL LEVEL PLOT, NIVEAU D'HUILE	1	1				
17	6GR–15377–00	GUIDE, INLET GUIDE D'ADMISSION	1	1				
18	93210–19MJ3	O-RING JOINT TORIQUE	1	1				
19	95D95–06016	BOLT, FLANGE DEEP RECESS BOULON FIXATION	3	3				
20	6GR–15316–01	DAMPER 1 AMORTISSEUR 1	1	1				
21	6GR–1246A–00	COVER 1 COUVERCLE 1	1	1				
22	6G5–12416–00	VALVE, PRESSURE CONTROL SOUPAPE DE CONTROLEUR PRESS	1	1				
23	90501–200A2	SPRING, COMPRESSION RESSORT, COMPRESSION	1	1				
24	90480–20M05	GROMMET PASSE-FIL	1	1				
25	95D95–06025	BOLT, FLANGE DEEP RECESS BOULON FIXATION	1	1				
26	95D95–06040	BOLT, FLANGE DEEP RECESS BOULON FIXATION	2	2				
27	6EK–12435–A0	GASKET JOINT	1	1				

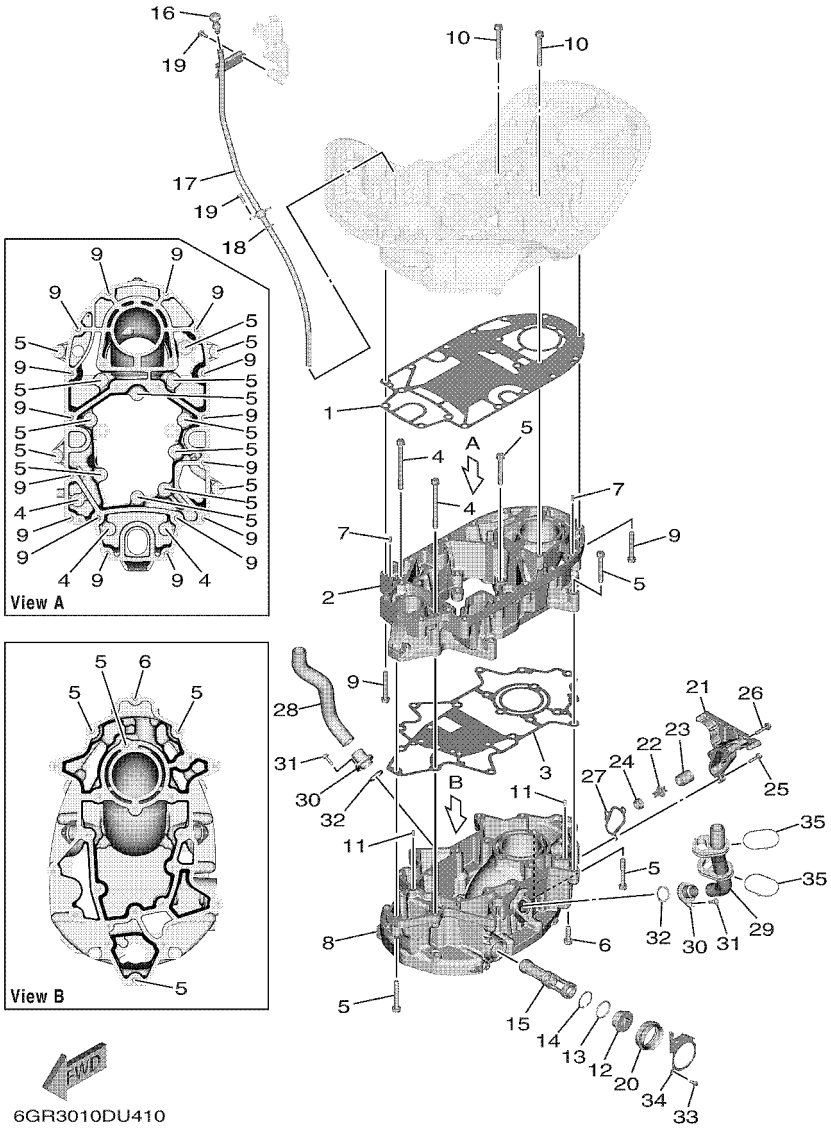

FIG. 42 OIL PAN — VENTILATEUR D'HUILE

REF. NO.	PART NO. N° PIECES	DESCRIPTION DESCRIPTION	NS	NS2				REMARKS REMARQUES
28	6GR–1243F–00	HOSE,3 DURITE 3	1	1				
29	6GR–1257A–01	HOSE ASSY 1 ENS. MANGUERA 1	1	1				
30	6GR–12581–00	JOINT, HOSE 1 JOINT DE TUYAU	2	2				
31	95D95–06020	BOLT, FLANGE DEEP RECESS BOULON FIXATION	2	2				
32	6GR–44366–01	DAMPER, WATER SEAL 2 JOINT, TUBE D'EAU 2	2	2				
33	97D95–06012	BOLT, HEXAGON DEEP RECESS VIS HEXAGONAL	1	1				
34	6GR–45152–00	COVER, UPPER CASING 2 CAPUCHON FOURREAU	1	1				
35	90464–66001	CLAMP BRIDE	2	2				

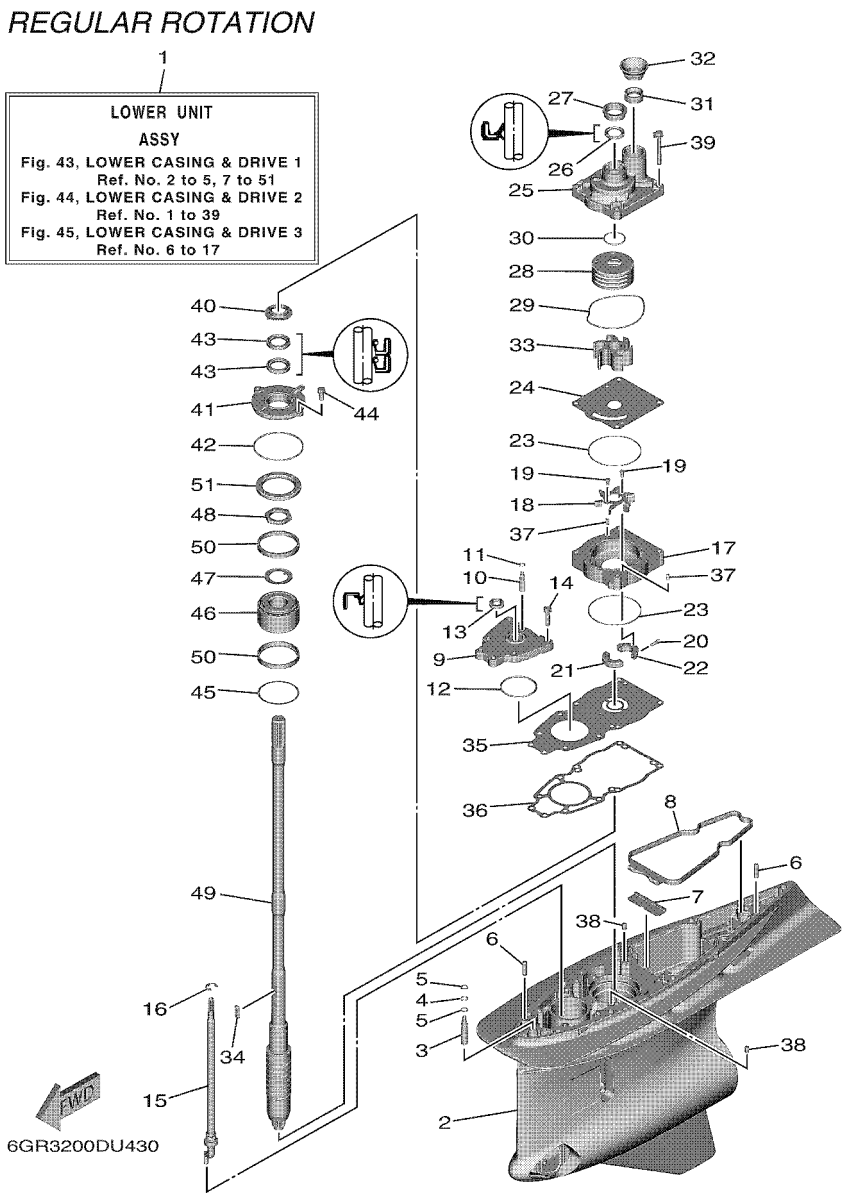

FIG. 43 LOWER CASING & DRIVE 1 — BOITIER D'HELICE TRANSMISSION1

REF. NO.	PART NO. N° PIECES	DESCRIPTION DESCRIPTION	NS	NS2				REMARKS REMARQUES
1	6GR–45300–06–8D	LOWER UNIT ASSY UNITE INFERIEURE (ENS.)	1					UR GRAY, X(25.2") UR GRAY, X(25.2")
	6GR–45300–06–CE	LOWER UNIT ASSY UNITE INFERIEURE (ENS.)		1				UR WHITE, X(25.2") UR WHITE, X(25.2")
	6GR–45300–16–8D	LOWER UNIT ASSY UNITE INFERIEURE (ENS.)	1					UR GRAY, U(30.2") UR GRAY, U(30.2")
	6GR–45300–16–CE	LOWER UNIT ASSY UNITE INFERIEURE (ENS.)		1				UR WHITE, U(30.2") UR WHITE, U(30.2")
	6GR–45300–26–8D	LOWER UNIT ASSY UNITE INFERIEURE (ENS.)	1					UR GRAY, E(35.2") UR GRAY, E(35.2")
	6GR–45300–26–CE	LOWER UNIT ASSY UNITE INFERIEURE (ENS.)		1				UR WHITE, E(35.2") UR WHITE, E(35.2")
2	6GR–45311–02–8D	CASING, LOWER BOITIER D'HELICE	1					UR GRAY UR GRAY
	6GR–45311–02–CE	CASING, LOWER BOITIER D'HELICE		1				UR WHITE UR WHITE
3	6GR–45308–00	VALVE ASSY 1 CLAPET COMPLET 1	1	1				
4	93210–10010	O-RING JOINT TORIQUE	1	1				
5	6GR–43873–00	RING, BACK UP RESSORT	2	2				
6	99480–08030	PIN GOUPILLE	2	2				
7	6GR–45376–00	GUIDE, SEAL DAMPER BUTEE, JOINT CAOUTCHOUC	1	1				
8	6GR–45375–01	DAMPER, SEAL BOURRELET, CAOUTCHOUC	1	1				
9	6GR–45321–00	PLATE PLAQUETTE	1	1				
10	6GR–45309–00	VALVE ASSY 2 CLAPET COMPLET 2	1	1				
11	93210–07100	O-RING JOINT TORIQUE	1	1				
12	93210–64488	O-RING JOINT TORIQUE	1	1				
13	93106–14001	OIL SEAL JOINT SPY	1	1				
14	97E95–08535	BOLT, HEXAGON W/W DEEP RECESS VIS HEXAGONAL AVC RONDELLE	6	6				
15	6GR–44150–01	SHIFT CAM ASSY CAME D'INVERSION	1	1				UR X(25.2") UR X(25.2")
	6GR–44150–11	SHIFT CAM ASSY CAME D'INVERSION	1	1				UR U(30.2") UR U(30.2")
	6GR–44150–21	SHIFT CAM ASSY CAME D'INVERSION	1	1				UR E(35.2") UR E(35.2")
16	99002–12600	CIRCLIP CIRCLIP	1	1				
17	6GR–44341–00	HOUSING, WATER PUMP CORPS, POMPE A EAU	1	1				
18	6GR–12451–00	IMPELLER, WATER PUMP ROTOR, DE POMPE A EAU	1	1				
19	97095–05010	BOLT BOULON	2	2				

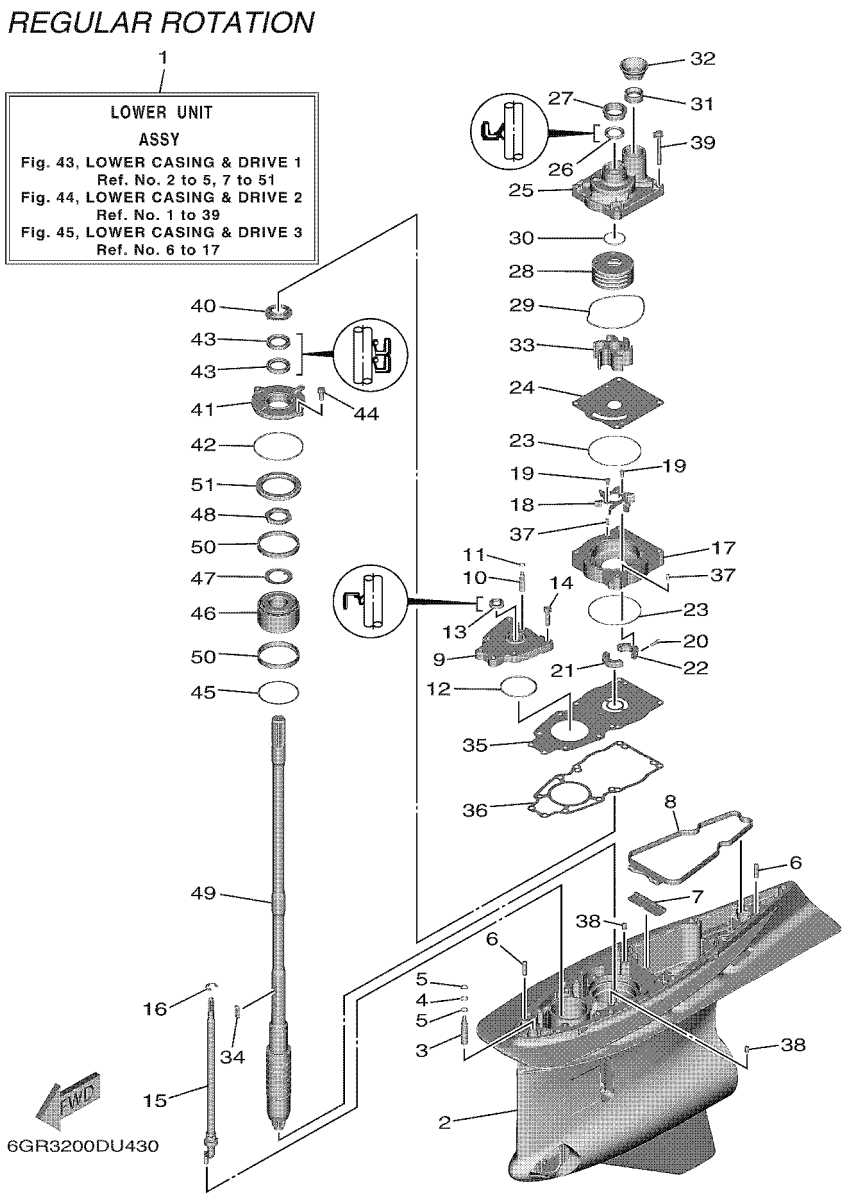

FIG. 43 LOWER CASING & DRIVE 1 — BOITIER D'HELICE TRANSMISSION1

REF. NO.	PART NO. N° PIECES	DESCRIPTION DESCRIPTION	NS	NS2				REMARKS REMARQUES
20	91380–05016	BOLT BOULON	2	2				
21	6GR–44381–00	SPACER 1 ENTRETOISE 1	1	1				
22	6GR–44382–00	SPACER 2 ENTRETOISE 2	1	1				
23	93210–97690	O-RING JOINT TORIQUE	2	2				
24	6GR–44323–00	OUTER PLATE, CARTRIDGE PLAQUE EXTERIEURE	1	1				
25	6GR–44311–00	HOUSING, WATER PUMP CORPS, POMPE A EAU	1	1				
26	93109–26001	OIL SEAL JOINT SPY	1	1				
27	6GR–44312–00	COVER, WATER PUMP HOUSING COUVERCLE	1	1				
28	6GR–44322–00	INSERT, CARTRIDGE CUVETTE	1	1				
29	93211–08001	O-RING JOINT TORIQUE	1	1				
30	93210–37160	O-RING JOINT TORIQUE	1	1				
31	6GR–44365–01	DAMPER, WATER SEAL 1 JOINT, TUBE D'EAU 1	1	1				
32	6GR–44379–00	GUIDE, WATER TUBE GUIDE DE TUBE D'EAU	1	1				
33	6GR–44352–00	IMPELLER TURBINE	1	1				
34	6AW–44336–00	KEY CLAVETTE	1	1				
35	6GR–44328–00	PLATE PLAQUETTE	1	1				
36	6GR–44315–00	GASKET, WATER PUMP JOINT, POMPE A EAU	1	1				
37	93606–12019	PIN, DOWEL GOUPILLE	2	2				
38	93608–12M05	PIN, DOWEL AXE	2	2				
39	90119–08196	BOLT, WITH WASHER BOULON, AVEC RONDELLE	4	4				
40	6GR–45344–00	COVER, OIL SEAL FLASQE, JOINT D'HUILE	1	1				
41	6GR–45335–00	HOUSING, OIL SEAL LOGEMENT DE JOINT SPY	1	1				
42	93210–89535	O-RING JOINT TORIQUE	1	1				
43	93101–30037	OIL SEAL JOINT SPY	2	2				
44	97E95–08520	BOLT, HEXAGON W/W DEEP RECESS VIS HEXAGONAL AVC RONDELLE	2	2				
45	688–45567–01	SHIM (T:0.10MM) CALE (T:0.10MM)	1	1				UR UR
	688–45567–10	SHIM (T:0.12MM) CALE (T:0.12MM)	1	1				UR UR

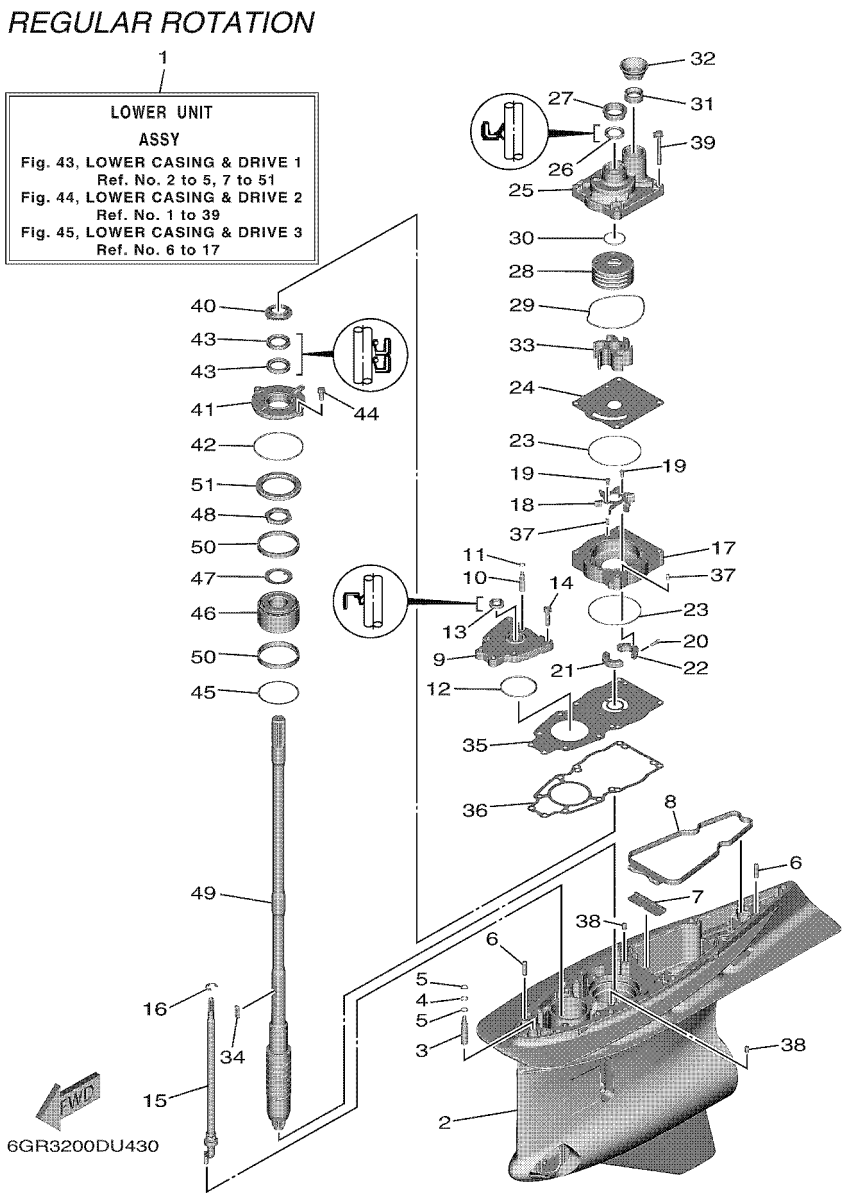

FIG. 43 LOWER CASING & DRIVE 1 — BOITIER D'HELICE TRANSMISSION1

REF. NO.	PART NO. N° PIECES	DESCRIPTION DESCRIPTION	NS	NS2				REMARKS REMARQUES
45	688–45567–20	SHIM (T:0.15MM) CALE (T:0.15MM)	1	1				UR UR
	688–45567–30	SHIM (T:0.18MM) CALE (T:0.18MM)	1	1				UR UR
	688–45567–40	SHIM (T:0.30MM) CALE (T:0.30MM)	1	1				UR UR
	688–45567–50	SHIM (T:0.40MM) CALE (T:0.40MM)	1	1				UR UR
	688–45567–60	SHIM (T:0.50MM) CALE (T:0.50MM)	1	1				UR UR
46	93399–99967	BEARING ROULEMENT	1	1				
47	90214–35M07	WASHER, CLAW RONDELLE, A GRIFFES	1	1				
48	90170–35M34	NUT ECROU	1	1				
49	6GR–45501–00	DRIVE SHAFT COMP. ARBRE MOTEUR COMP.	1	1				UR X(25.2") UR X(25.2")
	6GR–45501–10	DRIVE SHAFT COMP. ARBRE MOTEUR COMP.	1	1				UR U(30.2") UR U(30.2")
	6GR–45501–20	DRIVE SHAFT COMP. ARBRE MOTEUR COMP.	1	1				UR E(35.2") UR E(35.2")
50	6GR–45539–00	SPACER 2 ENTRETOISE 2	2	2				
51	6GR–45244–00	NUT ECROU	1	1				

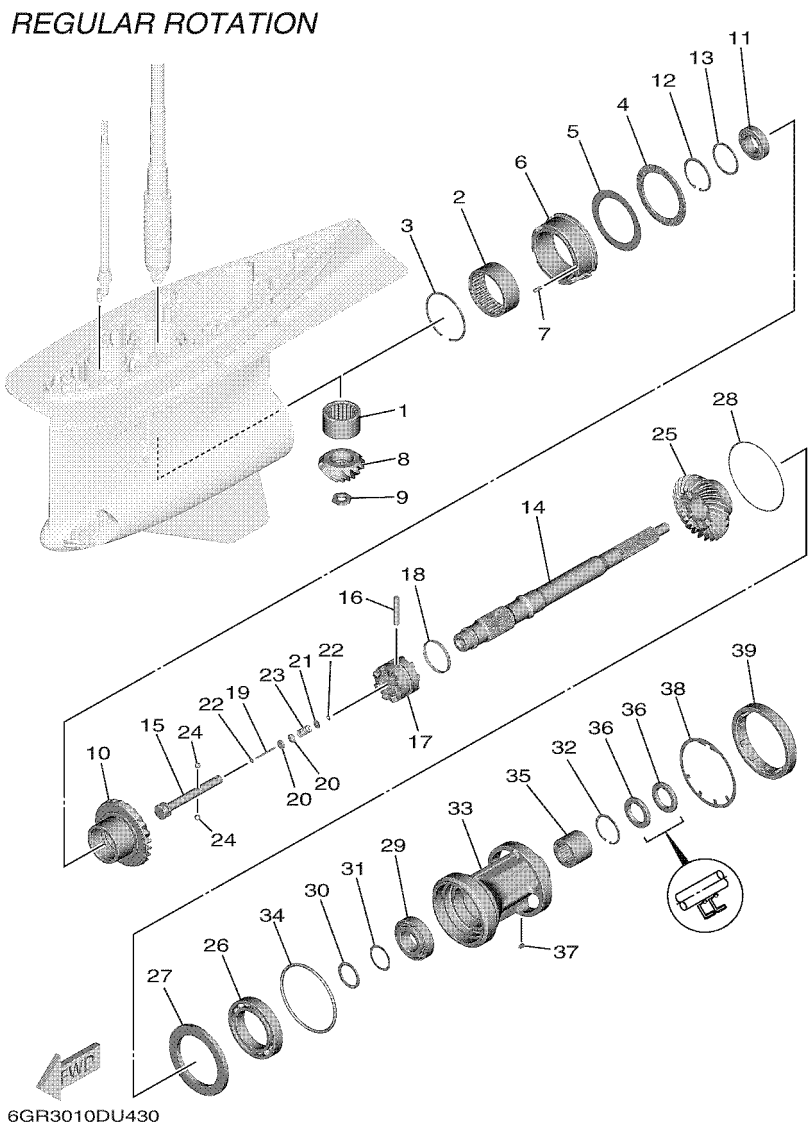

FIG. 44 LOWER CASING & DRIVE 2 — BOITIER D'HELICE TRANSMISSION2

REF. NO.	PART NO. N° PIECES	DESCRIPTION DESCRIPTION	NS	NS2				REMARKS REMARQUES
1	93311–944A0	BEARING ROULEMENT	1	1				
2	93311–675A1	BEARING ROULEMENT	1	1				
3	93450–92171	CIRCLIP CIRCLIP	1	1				
4	93340–69012	BEARING CERVEAUX DE DIRECTION	1	1				
5	6GR–45567–00	SHIM (T:2.00MM) CALE (T:2.00MM)	1	1				UR UR
	6GR–45567–10	SHIM (T:2.03MM) CALE (T:2.03MM)	1	1				UR UR
	6GR–45567–20	SHIM (T:2.06MM) CALE (T:2.06MM)	1	1				UR UR
	6GR–45567–30	SHIM (T:2.09MM) CALE (T:2.09MM)	1	1				UR UR
	6GR–45567–40	SHIM (T:2.12MM) CALE (T:2.12MM)	1	1				UR UR
	6GR–45567–50	SHIM (T:2.15MM) CALE (T:2.15MM)	1	1				UR UR
	6GR–45567–60	SHIM (T:2.18MM) CALE (T:2.18MM)	1	1				UR UR
	6GR–45567–70	SHIM (T:2.21MM) CALE (T:2.21MM)	1	1				UR UR
6	6GR–45824–00	ADAPTER ADAPTATEUR	1	1				
7	93606–16117	PIN, DOWEL GOUPILLE	1	1				
8	6GR–45551–00	PINION (14T) PIGNON D'ATTAQUE (14D)	1	1				
9	90170–18009	NUT ECROU	1	1				
10	6GR–45561–00	GEAR 1 (25T) PIGNON 1 (25T)	1	1				
11	93332–000A0	BEARING ROULEMENT	1	1				
12	99009–62500	CIRCLIP CIRCLIP	1	1				
13	90201–54008	WASHER, PLATE RONDELLE, PLATE	1	1				
14	6GR–45611–00	SHAFT, PROPELLER ARBRE, HELICE	1	1				
15	6GR–45634–00	SLIDE, SHIFT CONTRE-POUSSOIR	1	1				
16	6GR–45632–00	PIN, CROSS GOUPILLE DE CRABOT	1	1				
17	6GR–45631–00	CLUTCH, DOG CRABOT	1	1				
18	6GR–45633–00	RING, CROSS PIN JONC, GOUPILLE CRABOT	1	1				
19	6H1–45668–00	SHAFT, FREE 1 AXE 1	1	1				
20	61A–45635–00	PLUNGER, SHIFT POUSSOIR D'EMBRAYAGE	2	2				

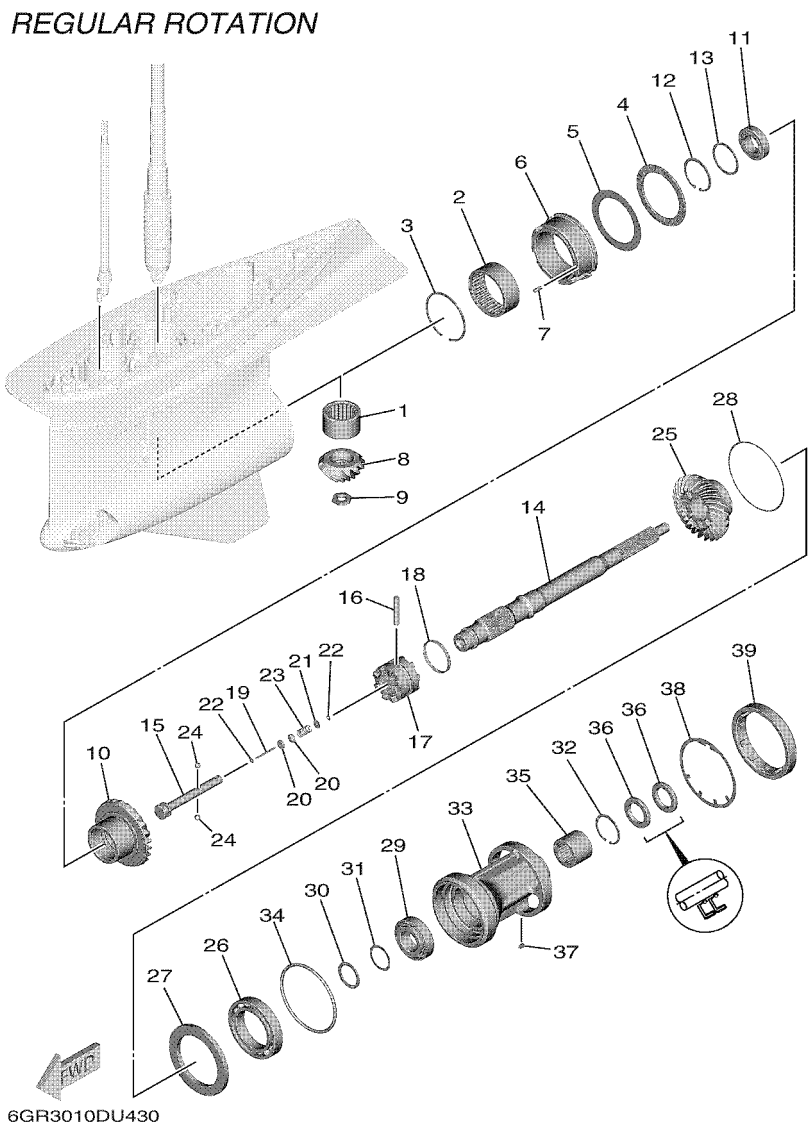

FIG. 44 LOWER CASING & DRIVE 2 — BOITIER D'HELICE TRANSMISSION2

REF. NO.	PART NO. N° PIECES	DESCRIPTION DESCRIPTION	NS	NS2				REMARKS REMARQUES
21	90201–02M00	WASHER, PLATE RONDELLE, PLATE	1	1				
22	90183–02M03	NUT, SPRING ECROU, RESSORT	2	2				
23	90501–10M77	SPRING, COMPRESSION RESSORT, COMPRESSION	1	1				
24	93501–04011	BALL BILLE	2	2				
25	6GR–45571–00	GEAR 2 (25T) PIGNON 2 (25T)	1	1				
26	93306–01501	BEARING ROULEMENT	1	1				
27	6GR–45576–00	WASHER, THRUST 2 RONDELLE DE CALAGE 2	1	1				
28	6GR–45577–00	SHIM (T:0.10MM) CALE (T:0.10MM)	1	1				UR UR
	6GR–45577–10	SHIM (T:0.12MM) CALE (T:0.12MM)	1	1				UR UR
	6GR–45577–20	SHIM (T:0.15MM) CALE (T:0.15MM)	1	1				UR UR
	6GR–45577–30	SHIM (T:0.18MM) CALE (T:0.18MM)	1	1				UR UR
	6GR–45577–40	SHIM (T:0.30MM) CALE (T:0.30MM)	1	1				UR UR
	6GR–45577–50	SHIM (T:0.40MM) CALE (T:0.40MM)	1	1				UR UR
	6GR–45577–60	SHIM (T:0.50MM) CALE (T:0.50MM)	1	1				UR UR
29	93332–00042	BEARING ROULEMENT	1	1				
30	90201–40008	WASHER, PLATE RONDELLE, PLATE	1	1				
31	6GR–45578–00	SHIM (T:0.10MM) CALE (T:0.10MM)	1	1				UR UR
	6GR–45578–10	SHIM (T:0.12MM) CALE (T:0.12MM)	1	1				UR UR
	6GR–45578–20	SHIM (T:0.15MM) CALE (T:0.15MM)	1	1				UR UR
	6GR–45578–30	SHIM (T:0.18MM) CALE (T:0.18MM)	1	1				UR UR
	6GR–45578–40	SHIM (T:0.30MM) CALE (T:0.30MM)	1	1				UR UR
	6GR–45578–50	SHIM (T:0.40MM) CALE (T:0.40MM)	1	1				UR UR
	6GR–45578–60	SHIM (T:0.50MM) CALE (T:0.50MM)	1	1				UR UR
	6GR–45578–70	SHIM (T:1.00MM) CALE (T:1.00MM)	1	1				UR UR
32	99009–55500	CIRCLIP CIRCLIP	1	1				
33	6GR–45332–00	HOUSING, BEARING FLASQUE, ROULEMENT	1	1				
34	93211–26001	O-RING JOINT TORIQUE	1	1				

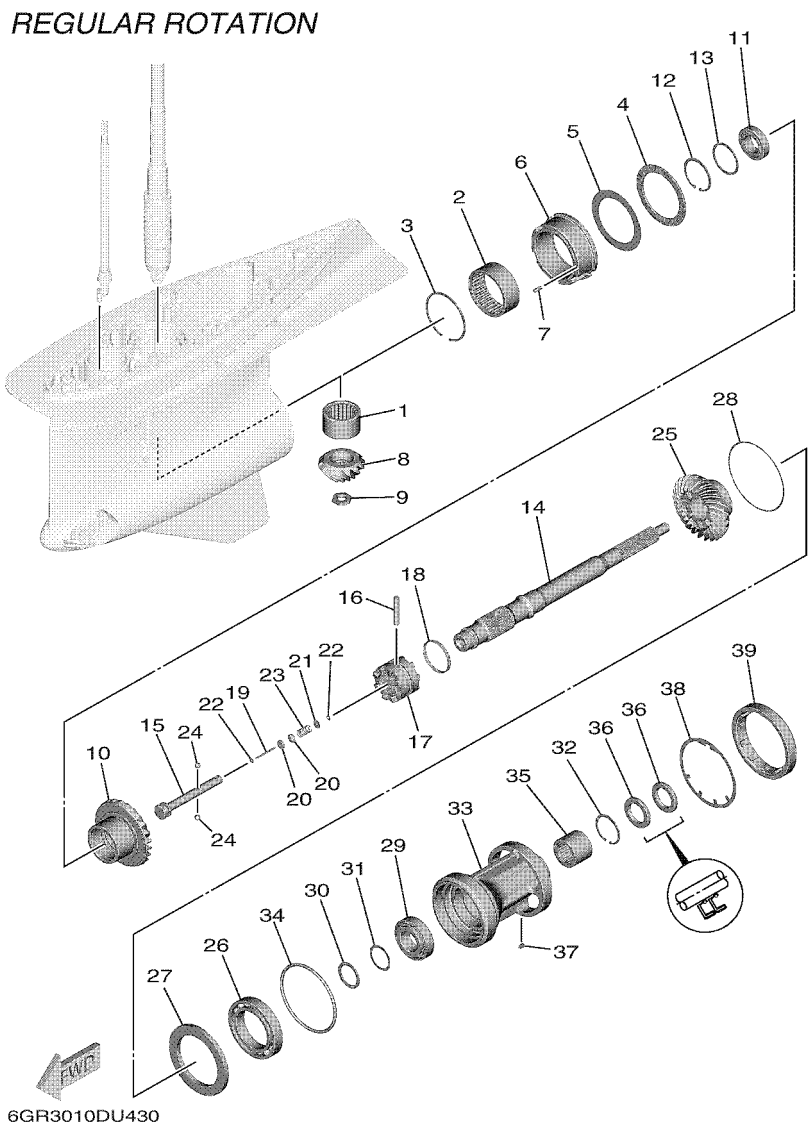

FIG. 44 LOWER CASING & DRIVE 2 — BOITIER D'HELICE TRANSMISSION2

REF. NO.	PART NO. N° PIECES	DESCRIPTION DESCRIPTION	NS	NS2				REMARKS REMARQUES
35	93311–737A2	BEARING ROULEMENT	1	1				
36	93101–37001	OIL SEAL JOINT SPY	2	2				
37	90282–05008	KEY, STRAIGHT CLAVETTE, DROITE	1	1				
38	6GR–45383–00	WASHER, CLAW FREIN D'ECROU	1	1				
39	6GR–45384–00	NUT ECROU	1	1				

FIG. 45 LOWER CASING & DRIVE 3 — BOITIER D'HELICE TRANSMISSION3

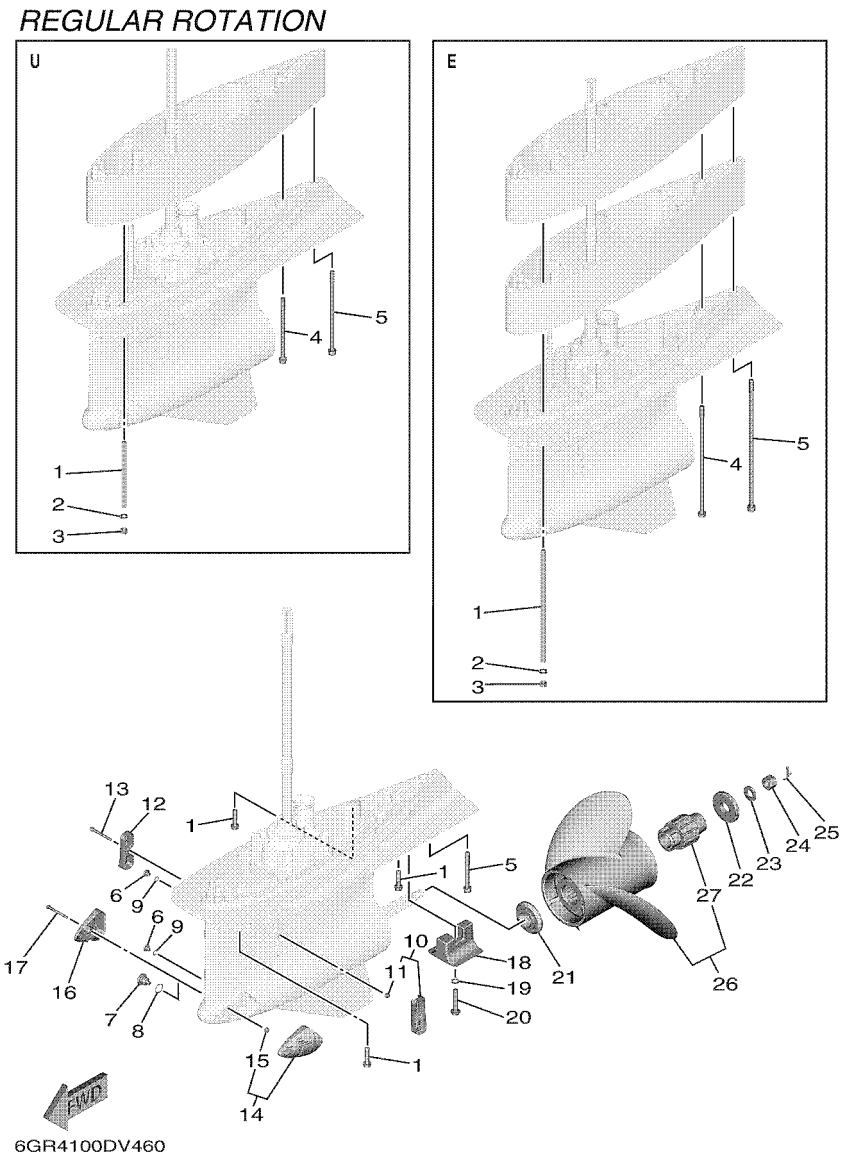

REF. NO.	PART NO. N° PIECES	DESCRIPTION DESCRIPTION	NS	NS2				REMARKS REMARQUES
1	90119–10024	BOLT, WITH WASHER BOULON, AVEC RONDELLE	9	9				UR X(25.2") UR X(25.2")
	90116–10067	BOLT, STUD GOUJON	8	8				UR U(30.2") UR U(30.2")
	90116–10066	BOLT, STUD GOUJON	8	8				UR E(35.2") UR E(35.2")
2	92995–10600	WASHER RONDELLE	8	8				U(30.2"),E(35.2") U(30.2"),E(35.2")
3	95380–10600	NUT ECROU	8	8				U(30.2"),E(35.2") U(30.2"),E(35.2")
4	90119–10009	BOLT, WITH WASHER BOULON, AVEC RONDELLE	1	1				UR U(30.2") UR U(30.2")
	90119–10060	BOLT, WITH WASHER BOULON, AVEC RONDELLE	1	1				UR E(35.2") UR E(35.2")
5	90110–10053	BOLT, HEXAGON SOCKET HEAD BOULON, TETE HEXAGONALE CREUSE	1	1				UR X(25.2") UR X(25.2")
	90110–10054	BOLT, HEXAGON SOCKET HEAD BOULON, TETE HEXAGONALE CREUSE	1	1				UR U(30.2") UR U(30.2")
	90110–10055	BOLT, HEXAGON SOCKET HEAD BOULON, TETE HEXAGONALE CREUSE	1	1				UR E(35.2") UR E(35.2")
6	90340–08003	PLUG, STRAIGHT SCREW PLOT, FILETE DROIT	2	2				
7	6GR–45341–00	PLUG, DRAIN BOUCHON DE VIDANGE	1	1				
8	93210–19123	O-RING JOINT TORIQUE	1	1				
9	93210–09165	O-RING JOINT TORIQUE	2	2				
10	6GR–45214–01	COVER, WATER INLET 1 GRILLE, ENTREE D'EAU 1	1	1				
11	90185–06M07	.NUT, SELF-LOCKING .ECROU,AUTO-BLOQUANT	1	1				
12	6GR–45215–01	COVER, WATER INLET 2 GRILLE, ENTREE D'EAU 2	1	1				
13	90110–06425	BOLT, HEXAGON SOCKET HEAD BOULON, TETE HEXAGONALE CREUSE	1	1				
14	6KN–45224–00	COVER, WATER INLET 3 GRILLE, ENTREE D'EAU 3	1	1				
15	90185–06M07	.NUT, SELF-LOCKING .ECROU,AUTO-BLOQUANT	1	1				
16	6KN–45225–00	COVER, WATER INLET 4 GRILLE, ENTREE D'EAU 4	1	1				
17	90110–06425	BOLT, HEXAGON SOCKET HEAD BOULON, TETE HEXAGONALE CREUSE	1	1				
18	6AW–45373–00	ANODE ANODE	1	1				
19	92990–10300	WASHER RONDELLE, PLATE	1	1				
20	90105–10257	BOLT, FLANGE BOULON, A COLLERETTE	1	1				
21	6GR–45987–00	SPACER 1 ENTRETOISE 1	1	1				
22	6GR–45997–00	SPACER 2 ENTRETOISE 2	1	1				

FIG. 45 LOWER CASING & DRIVE 3 — BOITIER D'HELICE TRANSMISSION3

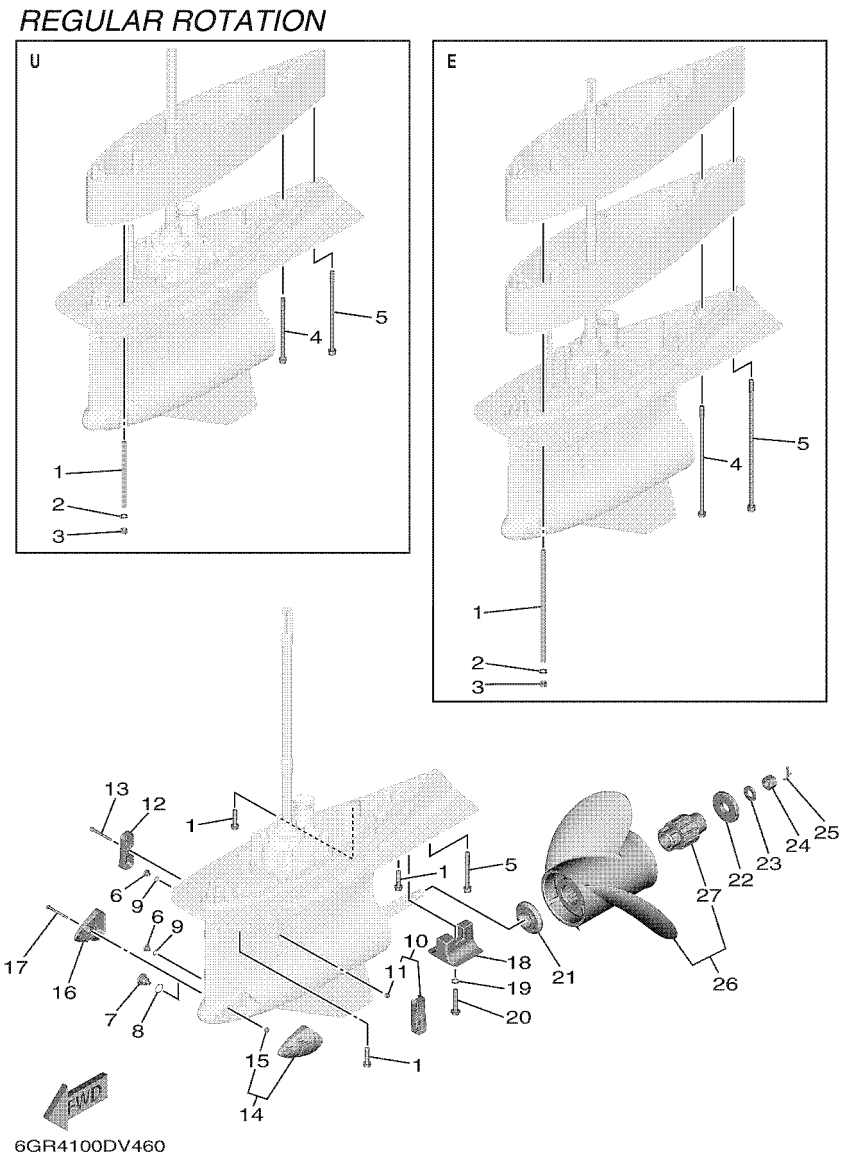

REF. NO.	PART NO. N° PIECES	DESCRIPTION DESCRIPTION	NS	NS2				REMARKS REMARQUES
23	90201–19M01	WASHER, PLATE RONDELLE, PLATE	1	1				
24	90171–18M04	NUT, CASTLE ECROU, CRENELE	1	1				
25	91490–40030	PIN. COTTER GOUPILLE	1	1				
26	6GR–45970–10	PROPELLER (3X17-1/8"X15"-Y) HELICE (3X17-1/8"X15"-Y)	1	1				UR 3 BLADE UR 3 BLADE
	6GR–45972–10	PROPELLER (3X16-7/8"X17"-Y) HELICE (3X16-7/8"X17"-Y)	1	1				UR 3 BLADE UR 3 BLADE
	6GR–45974–10	PROPELLER (3X16-5/8"X19"-Y) HELICE (3X16-5/8"X19"-Y)	1	1				UR 3 BLADE UR 3 BLADE
	6GR–45976–10	PROPELLER (3X16-3/8"X21"-Y) HELICE (3X16-3/8"X21"-Y)	1	1				UR 3 BLADE UR 3 BLADE
	6GR–45978–10	PROPELLER (3X16-1/8"X23"-Y) HELICE (3X16-1/8"X23"-Y)	1	1				UR 3 BLADE UR 3 BLADE
	6GR–45930–10	PROPELLER (3X16"X25"-Y) HELICE (3X16"X25"-Y)	1	1				UR 3 BLADE UR 3 BLADE
	6GR–45938–10	PROPELLER (3X16-5/8"X18"-Y) HELICE (3X16-5/8"X18"-Y)	1	1				UR 3 BLADE UR 3 BLADE
	6GR–45936–10	PROPELLER (3X16-3/8"X20"-Y) HELICE (3X16-3/8"X20"-Y)	1	1				UR 3 BLADE UR 3 BLADE
	6GR–45934–10	PROPELLER (3X16-1/8"X22"-Y) HELICE (3X16-1/8"X22"-Y)	1	1				UR 3 BLADE UR 3 BLADE
	6GR–45932–10	PROPELLER (3X16"X24"-Y) HELICE (3X16"X24"-Y)	1	1				UR 3 BLADE UR 3 BLADE
	6GR–45D70–10	PROPELLER (3X16-7/8"X16"-Y) HELICE (3X16-7/8"X16"-Y)	1	1				UR 3 BLADE UR 3 BLADE
	6GR–45D72–10	PROPELLER (3X16"X26"-Y) HELICE (3X16"X26"-Y)	1	1				UR 3 BLADE UR 3 BLADE
	6GR–45D74–20	PROPELLER (3X16"X27"-Y2) HELICE (3X16"X27"-Y2)	1	1				UR 3 BLADE UR 3 BLADE
27	6GR–45C81–10	.DAMPER RUBBER, PROPELLER 1 .AMORTISSEUR HELICE 1	1	1				

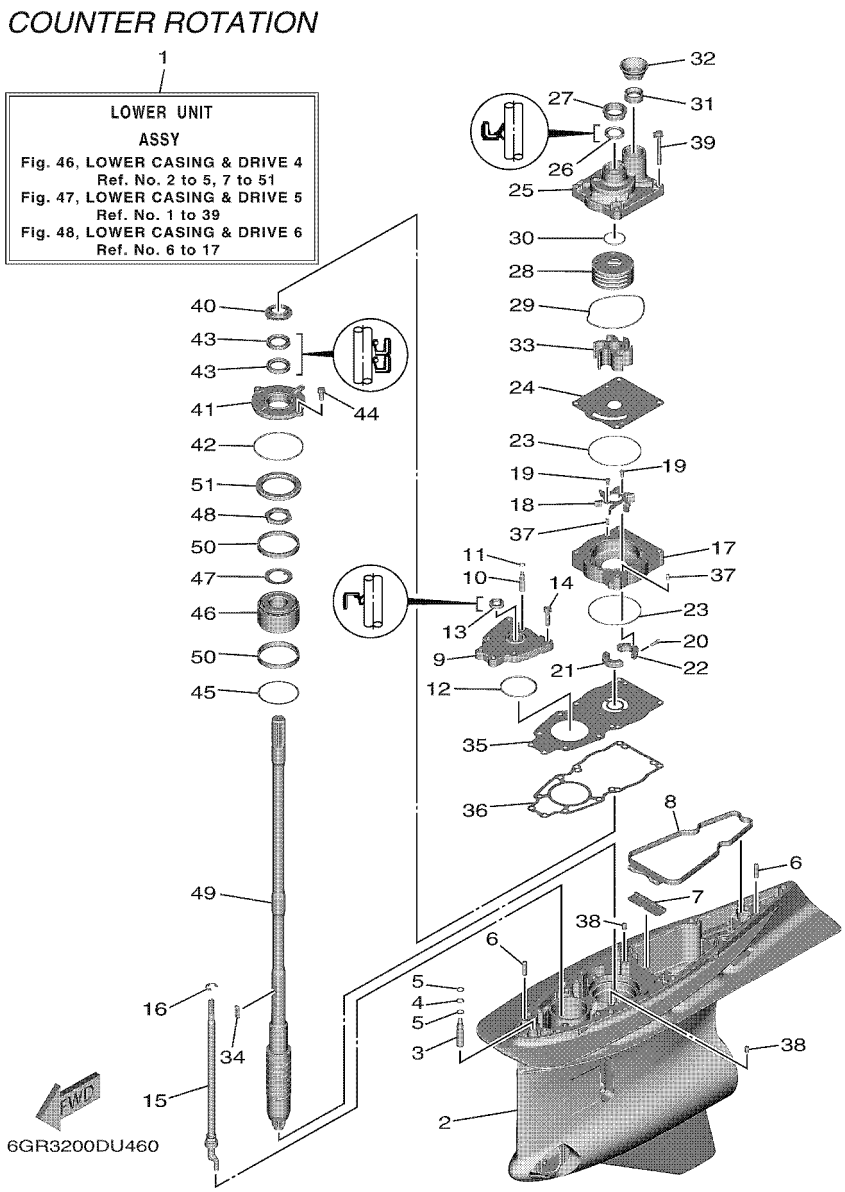

FIG. 46 LOWER CASING & DRIVE 4 — BOITIER D'HELICE TRANSMISSION4

REF. NO.	PART NO. N° PIECES	DESCRIPTION DESCRIPTION	NS	NS2				REMARKS REMARQUES
1	6GS–45300–06–8D	LOWER UNIT ASSY UNITE INFERIEURE (ENS.)	1					UR GRAY, X(25.2") UR GRAY, X(25.2")
	6GS–45300–06–CE	LOWER UNIT ASSY UNITE INFERIEURE (ENS.)		1				UR WHITE, X(25.2") UR WHITE, X(25.2")
	6GS–45300–16–8D	LOWER UNIT ASSY UNITE INFERIEURE (ENS.)	1					UR GRAY, U(30.2") UR GRAY, U(30.2")
	6GS–45300–16–CE	LOWER UNIT ASSY UNITE INFERIEURE (ENS.)		1				UR WHITE, U(30.2") UR WHITE, U(30.2")
	6GS–45300–26–8D	LOWER UNIT ASSY UNITE INFERIEURE (ENS.)	1					UR GRAY, E(35.2") UR GRAY, E(35.2")
	6GS–45300–26–CE	LOWER UNIT ASSY UNITE INFERIEURE (ENS.)		1				UR WHITE, E(35.2") UR WHITE, E(35.2")
2	6GR–45311–02–8D	CASING, LOWER BOITIER D'HELICE	1					UR GRAY UR GRAY
	6GR–45311–02–CE	CASING, LOWER BOITIER D'HELICE		1				UR WHITE UR WHITE
3	6GR–45308–00	VALVE ASSY 1 CLAPET COMPLET 1	1	1				
4	93210–10010	O-RING JOINT TORIQUE	1	1				
5	6GR–43873–00	RING, BACK UP RESSORT	2	2				
6	99480–08030	PIN GOUPILLE	2	2				
7	6GR–45376–00	GUIDE, SEAL DAMPER BUTEE, JOINT CAOUTCHOUC	1	1				
8	6GR–45375–01	DAMPER, SEAL BOURRELET, CAOUTCHOUC	1	1				
9	6GR–45321–00	PLATE PLAQUETTE	1	1				
10	6GR–45309–00	VALVE ASSY 2 CLAPET COMPLET 2	1	1				
11	93210–07100	O-RING JOINT TORIQUE	1	1				
12	93210–64488	O-RING JOINT TORIQUE	1	1				
13	93106–14001	OIL SEAL JOINT SPY	1	1				
14	97E95–08535	BOLT, HEXAGON W/W DEEP RECESS VIS HEXAGONAL AVC RONDELLE	6	6				
15	6GS–44150–01	SHIFT CAM ASSY CAME D'INVERSION	1	1				UR X(25.2") UR X(25.2")
	6GS–44150–11	SHIFT CAM ASSY CAME D'INVERSION	1	1				UR U(30.2") UR U(30.2")
	6GS–44150–21	SHIFT CAM ASSY CAME D'INVERSION	1	1				UR E(35.2") UR E(35.2")
16	99002–12600	CIRCLIP CIRCLIP	1	1				
17	6GR–44341–00	HOUSING, WATER PUMP CORPS, POMPE A EAU	1	1				
18	6GR–12451–00	IMPELLER, WATER PUMP ROTOR, DE POMPE A EAU	1	1				
19	97095–05010	BOLT BOULON	2	2				

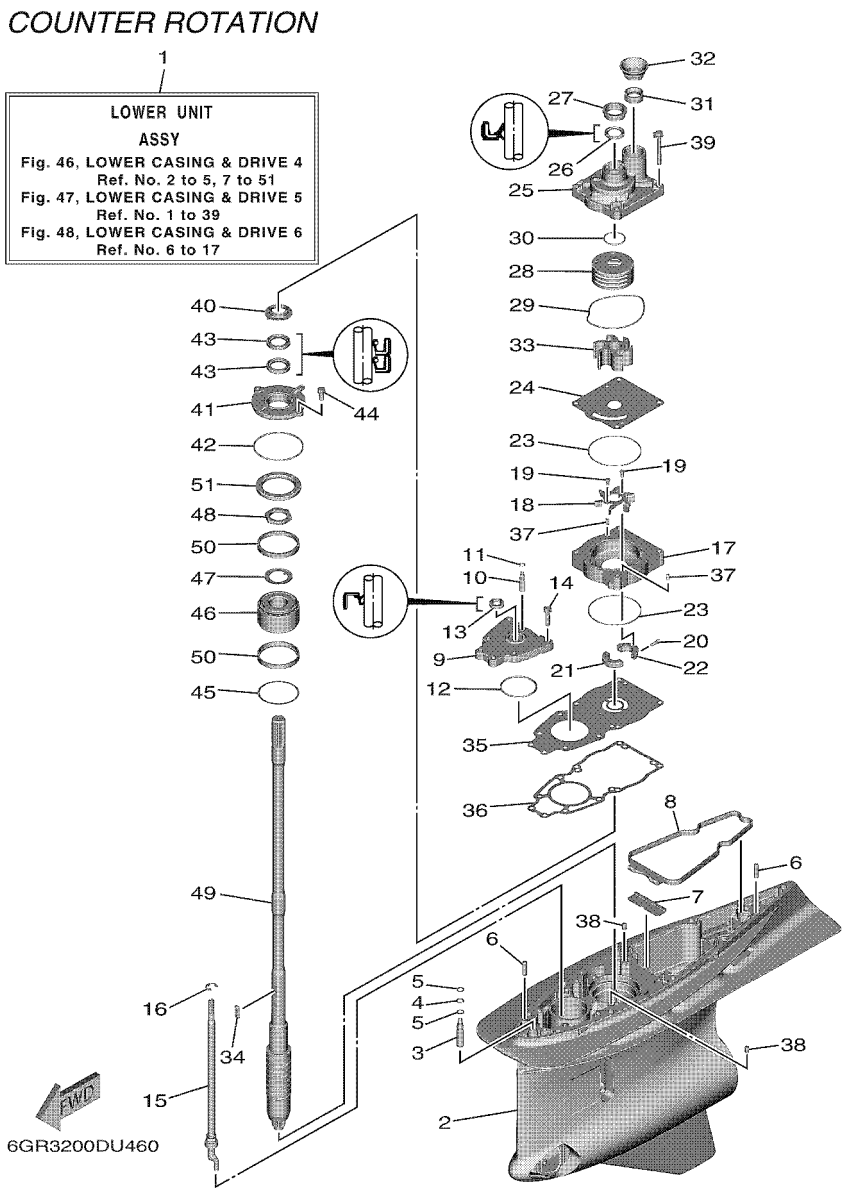

FIG. 46 LOWER CASING & DRIVE 4 — BOITIER D'HELICE TRANSMISSION4

REF. NO.	PART NO. N° PIECES	DESCRIPTION DESCRIPTION	NS	NS2				REMARKS REMARQUES
20	91380–05016	BOLT BOULON	2	2				
21	6GR–44381–00	SPACER 1 ENTRETOISE 1	1	1				
22	6GR–44382–00	SPACER 2 ENTRETOISE 2	1	1				
23	93210–97690	O-RING JOINT TORIQUE	2	2				
24	6GR–44323–00	OUTER PLATE, CARTRIDGE PLAQUE EXTERIEURE	1	1				
25	6GR–44311–00	HOUSING, WATER PUMP CORPS, POMPE A EAU	1	1				
26	93109–26001	OIL SEAL JOINT SPY	1	1				
27	6GR–44312–00	COVER, WATER PUMP HOUSING COUVERCLE	1	1				
28	6GR–44322–00	INSERT, CARTRIDGE CUVETTE	1	1				
29	93211–08001	O-RING JOINT TORIQUE	1	1				
30	93210–37160	O-RING JOINT TORIQUE	1	1				
31	6GR–44365–01	DAMPER, WATER SEAL 1 JOINT, TUBE D'EAU 1	1	1				
32	6GR–44379–00	GUIDE, WATER TUBE GUIDE DE TUBE D'EAU	1	1				
33	6GR–44352–00	IMPELLER TURBINE	1	1				
34	6AW–44336–00	KEY CLAVETTE	1	1				
35	6GR–44328–00	PLATE PLAQUETTE	1	1				
36	6GR–44315–00	GASKET, WATER PUMP JOINT, POMPE A EAU	1	1				
37	93606–12019	PIN, DOWEL GOUPILLE	2	2				
38	93608–12M05	PIN, DOWEL AXE	2	2				
39	90119–08196	BOLT, WITH WASHER BOULON, AVEC RONDELLE	4	4				
40	6GR–45344–00	COVER, OIL SEAL FLASQE, JOINT D'HUILE	1	1				
41	6GR–45335–00	HOUSING, OIL SEAL LOGEMENT DE JOINT SPY	1	1				
42	93210–89535	O-RING JOINT TORIQUE	1	1				
43	93101–30037	OIL SEAL JOINT SPY	2	2				
44	97E95–08520	BOLT, HEXAGON W/W DEEP RECESS VIS HEXAGONAL AVC RONDELLE	2	2				
45	688–45567–01	SHIM (T:0.10MM) CALE (T:0.10MM)	1	1				UR UR
	688–45567–10	SHIM (T:0.12MM) CALE (T:0.12MM)	1	1				UR UR

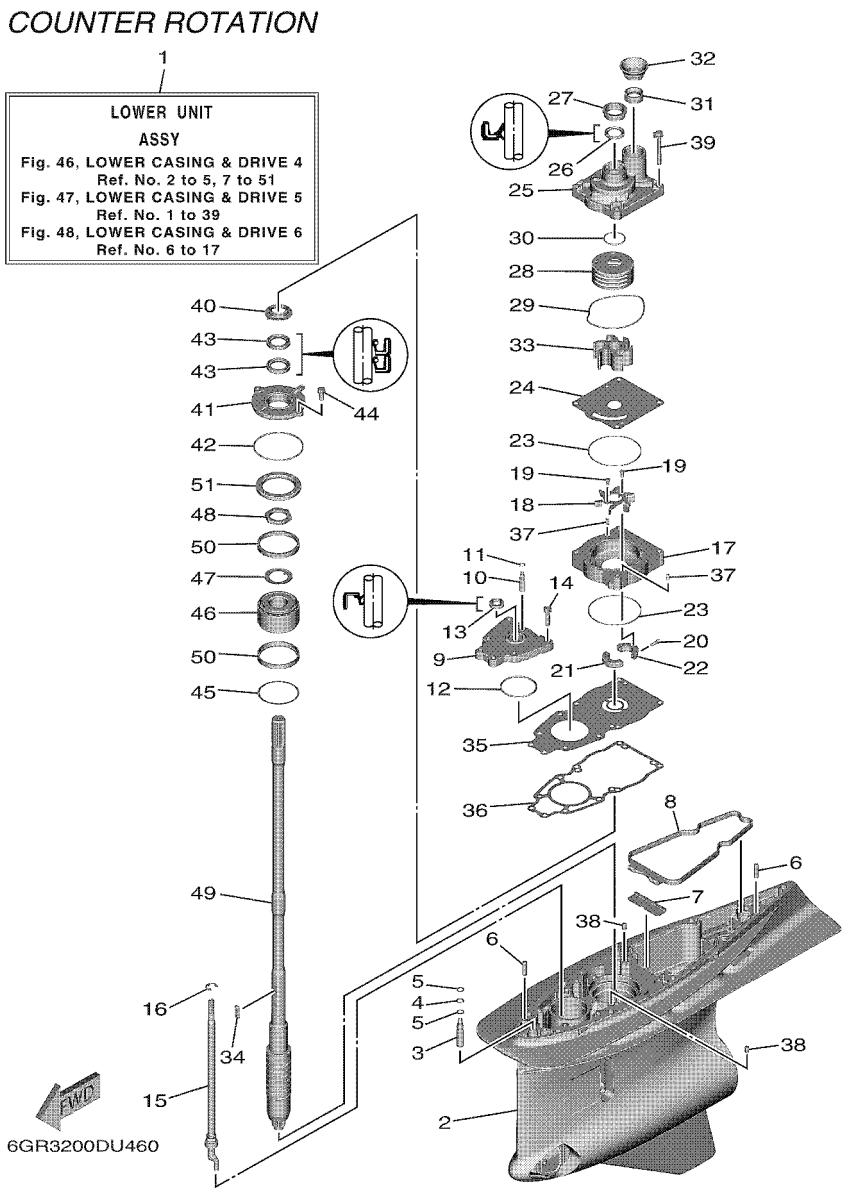

FIG. 46 LOWER CASING & DRIVE 4 — BOITIER D'HELICE TRANSMISSION4

REF. NO.	PART NO. N° PIECES	DESCRIPTION DESCRIPTION	NS	NS2				REMARKS REMARQUES
45	688–45567–20	SHIM (T:0.15MM) CALE (T:0.15MM)	1	1				UR UR
	688–45567–30	SHIM (T:0.18MM) CALE (T:0.18MM)	1	1				UR UR
	688–45567–40	SHIM (T:0.30MM) CALE (T:0.30MM)	1	1				UR UR
	688–45567–50	SHIM (T:0.40MM) CALE (T:0.40MM)	1	1				UR UR
	688–45567–60	SHIM (T:0.50MM) CALE (T:0.50MM)	1	1				UR UR
46	93399–99967	BEARING ROULEMENT	1	1				
47	90214–35M07	WASHER, CLAW RONDELLE, A GRIFFES	1	1				
48	90170–35M34	NUT ECROU	1	1				
49	6GR–45501–00	DRIVE SHAFT COMP. ARBRE MOTEUR COMP.	1	1				UR X(25.2") UR X(25.2")
	6GR–45501–10	DRIVE SHAFT COMP. ARBRE MOTEUR COMP.	1	1				UR U(30.2") UR U(30.2")
	6GR–45501–20	DRIVE SHAFT COMP. ARBRE MOTEUR COMP.	1	1				UR E(35.2") UR E(35.2")
50	6GR–45539–00	SPACER 2 ENTRETOISE 2	2	2				
51	6GR–45244–00	NUT ECROU	1	1				

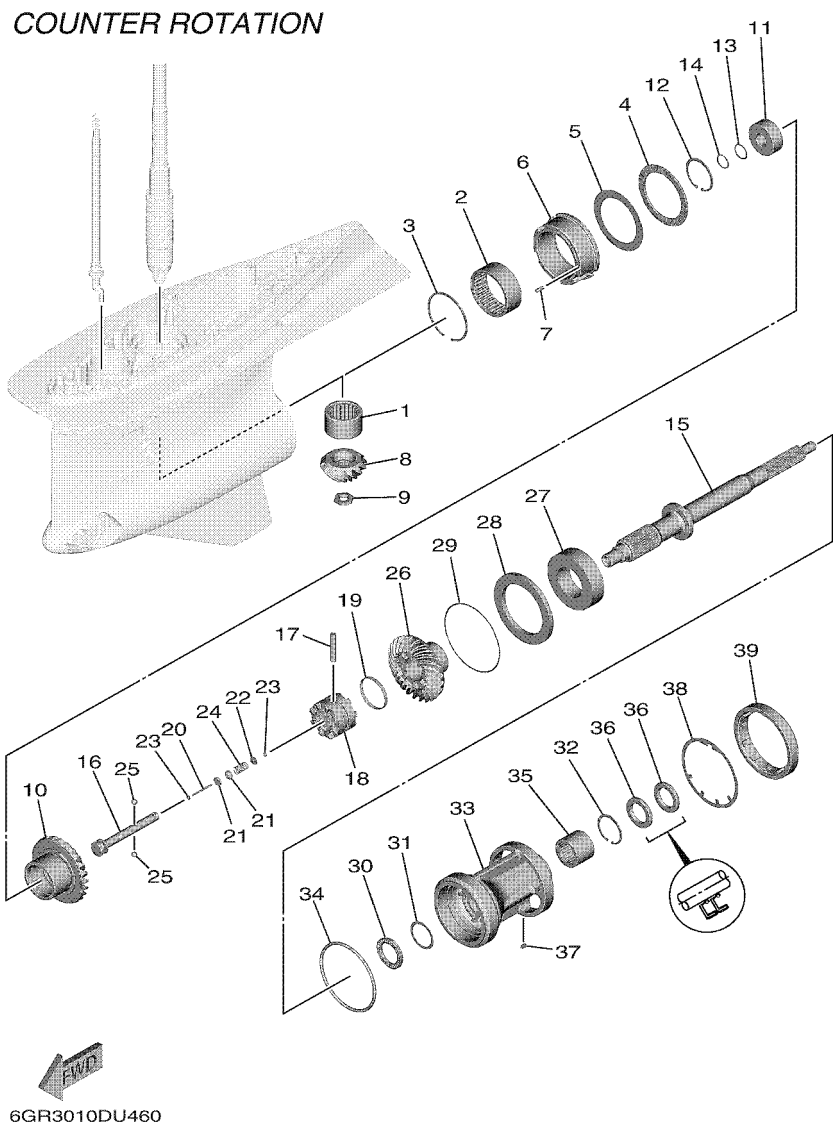

FIG. 47 LOWER CASING & DRIVE 5 — BOITIER D'HELICE TRANSMISSION5

REF. NO.	PART NO. N° PIECES	DESCRIPTION DESCRIPTION	NS	NS2				REMARKS REMARQUES
1	93311–944A0	BEARING ROULEMENT	1	1				
2	93311–675A1	BEARING ROULEMENT	1	1				
3	93450–92171	CIRCLIP CIRCLIP	1	1				
4	93340–69012	BEARING CERVEAUX DE DIRECTION	1	1				
5	6GR–45567–00	SHIM (T:2.00MM) CALE (T:2.00MM)	1	1				UR UR
	6GR–45567–10	SHIM (T:2.03MM) CALE (T:2.03MM)	1	1				UR UR
	6GR–45567–20	SHIM (T:2.06MM) CALE (T:2.06MM)	1	1				UR UR
	6GR–45567–30	SHIM (T:2.09MM) CALE (T:2.09MM)	1	1				UR UR
	6GR–45567–40	SHIM (T:2.12MM) CALE (T:2.12MM)	1	1				UR UR
	6GR–45567–50	SHIM (T:2.15MM) CALE (T:2.15MM)	1	1				UR UR
	6GR–45567–60	SHIM (T:2.18MM) CALE (T:2.18MM)	1	1				UR UR
	6GR–45567–70	SHIM (T:2.21MM) CALE (T:2.21MM)	1	1				UR UR
6	6GR–45824–00	ADAPTER ADAPTATEUR	1	1				
7	93606–16117	PIN, DOWEL GOUPILLE	1	1				
8	6GR–45551–00	PINION (14T) PIGNON D'ATTAQUE (14D)	1	1				
9	90170–18009	NUT ECROU	1	1				
10	6GS–45561–00	GEAR 1 (25T) PIGNON 1 (25T)	1	1				
11	93390–00033	BEARING ROULEMENT	1	1				
12	99009–62500	CIRCLIP CIRCLIP	1	1				
13	90201–253K0	WASHER, PLATE (T=1.0) RONDELLE, PLATE (T=1.0)	1	1				
14	93440–25020	CIRCLIP CIRCLIP	1	1				
15	6GS–45611–01	SHAFT, PROPELLER ARBRE, HELICE	1	1				
16	6GR–45634–00	SLIDE, SHIFT CONTRE-POUSSOIR	1	1				
17	6GR–45632–00	PIN, CROSS GOUPILLE DE CRABOT	1	1				
18	6GR–45631–00	CLUTCH, DOG CRABOT	1	1				
19	6GR–45633–00	RING, CROSS PIN JONC, GOUPILLE CRABOT	1	1				
20	6H1–45668–00	SHAFT, FREE 1 AXE 1	1	1				

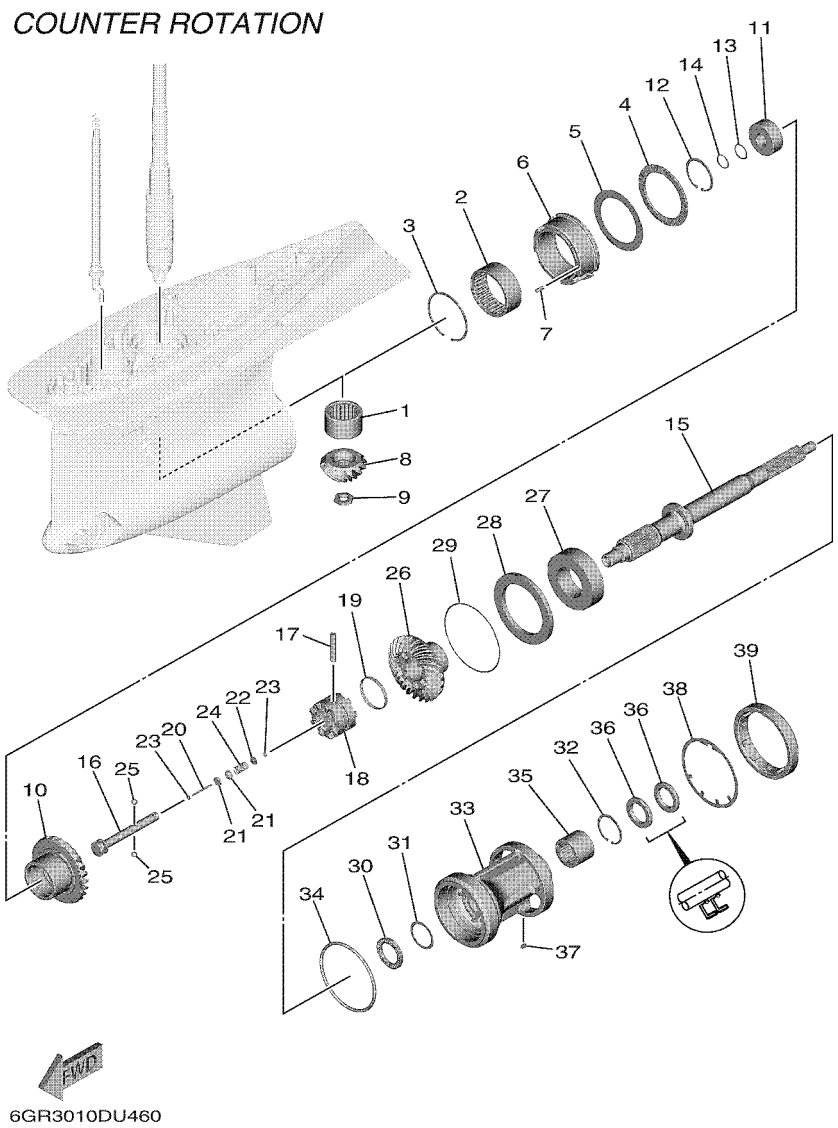

FIG. 47 LOWER CASING & DRIVE 5 — BOITIER D'HELICE TRANSMISSION5

REF. NO.	PART NO. N° PIECES	DESCRIPTION DESCRIPTION	NS	NS2				REMARKS REMARQUES
21	61A–45635–00	PLUNGER, SHIFT POUSSOIR D'EMBRAYAGE	2	2				
22	90201–02M00	WASHER, PLATE RONDELLE, PLATE	1	1				
23	90183–02M03	NUT, SPRING ECROU, RESSORT	2	2				
24	90501–10M77	SPRING, COMPRESSION RESSORT, COMPRESSION	1	1				
25	93501–04011	BALL BILLE	2	2				
26	6GS–45571–00	GEAR 2 (25T) PIGNON 2 (25T)	1	1				
27	93332–000B2	BEARING ROULEMENT	1	1				
28	6GR–45576–00	WASHER, THRUST 2 RONDELLE DE CALAGE 2	1	1				
29	6GR–45577–00	SHIM (T:0.10MM) CALE (T:0.10MM)	1	1				UR UR
	6GR–45577–10	SHIM (T:0.12MM) CALE (T:0.12MM)	1	1				UR UR
	6GR–45577–20	SHIM (T:0.15MM) CALE (T:0.15MM)	1	1				UR UR
	6GR–45577–30	SHIM (T:0.18MM) CALE (T:0.18MM)	1	1				UR UR
	6GR–45577–40	SHIM (T:0.30MM) CALE (T:0.30MM)	1	1				UR UR
	6GR–45577–50	SHIM (T:0.40MM) CALE (T:0.40MM)	1	1				UR UR
	6GR–45577–60	SHIM (T:0.50MM) CALE (T:0.50MM)	1	1				UR UR
30	93341–440U5	BEARING CERVEAUX DE DIRECTION	1	1				
31	6K1–45578–01	SHIM (T:0.10MM) CALE (T:0.10MM)	1	1				UR UR
	6K1–45578–10	SHIM (T:0.12MM) CALE (T:0.12MM)	1	1				UR UR
	6K1–45578–20	SHIM (T:0.15MM) CALE (T:0.15MM)	1	1				UR UR
	6K1–45578–30	SHIM (T:0.18MM) CALE (T:0.18MM)	1	1				UR UR
	6K1–45578–40	SHIM (T:0.30MM) CALE (T:0.30MM)	1	1				UR UR
	6K1–45578–50	SHIM (T:0.40MM) CALE (T:0.40MM)	1	1				UR UR
	6K1–45578–60	SHIM (T:0.50MM) CALE (T:0.50MM)	1	1				UR UR
32	99009–55500	CIRCLIP CIRCLIP	1	1				
33	6GS–45332–00	HOUSING, BEARING FLASQUE, ROULEMENT	1	1				
34	93211–26001	O-RING JOINT TORIQUE	1	1				
35	93311–737A2	BEARING ROULEMENT	1	1				

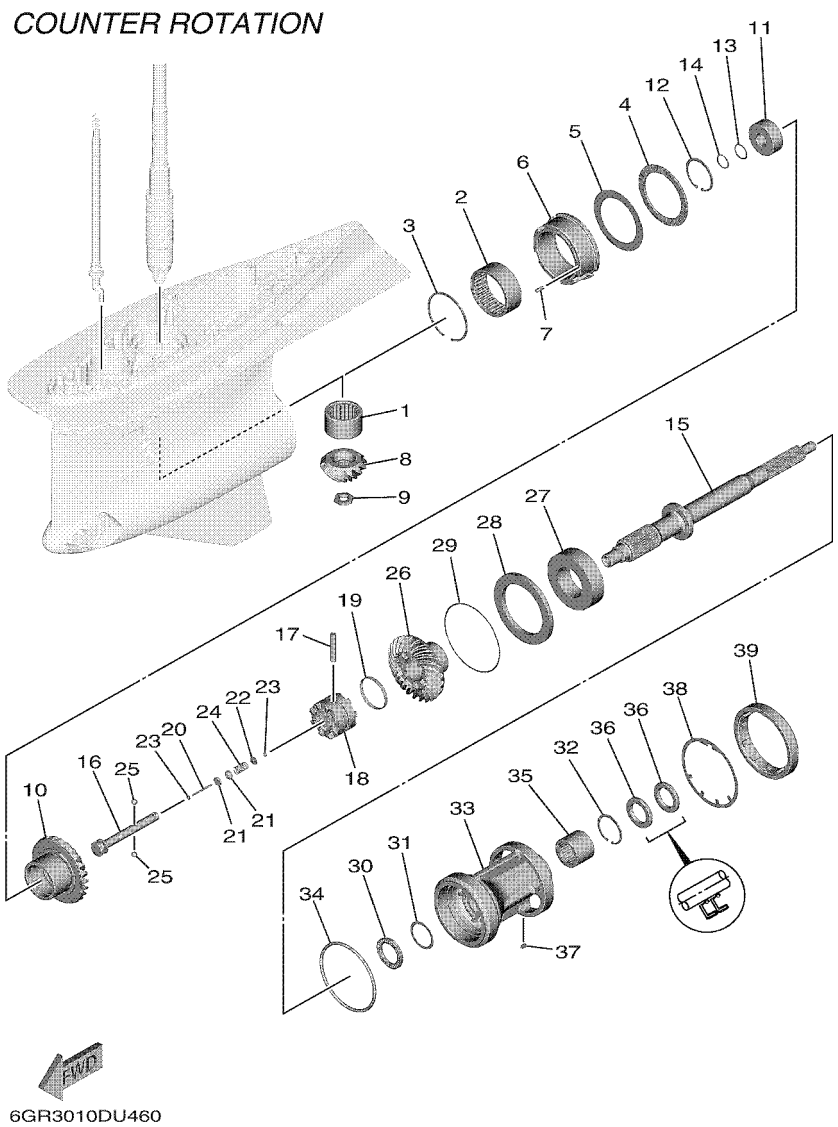

FIG. 47 LOWER CASING & DRIVE 5 — BOITIER D'HELICE TRANSMISSION5

REF. NO.	PART NO. N° PIECES	DESCRIPTION DESCRIPTION	NS	NS2				REMARKS REMARQUES
36	93101–37001	OIL SEAL JOINT SPY	2	2				
37	90282–05008	KEY, STRAIGHT CLAVETTE, DROITE	1	1				
38	6GR–45383–00	WASHER, CLAW FREIN D'ECROU	1	1				
39	6GR–45384–00	NUT ECROU	1	1				

FIG. 48 LOWER CASING & DRIVE 6 — BOITIER D'HELICE TRANSMISSION6

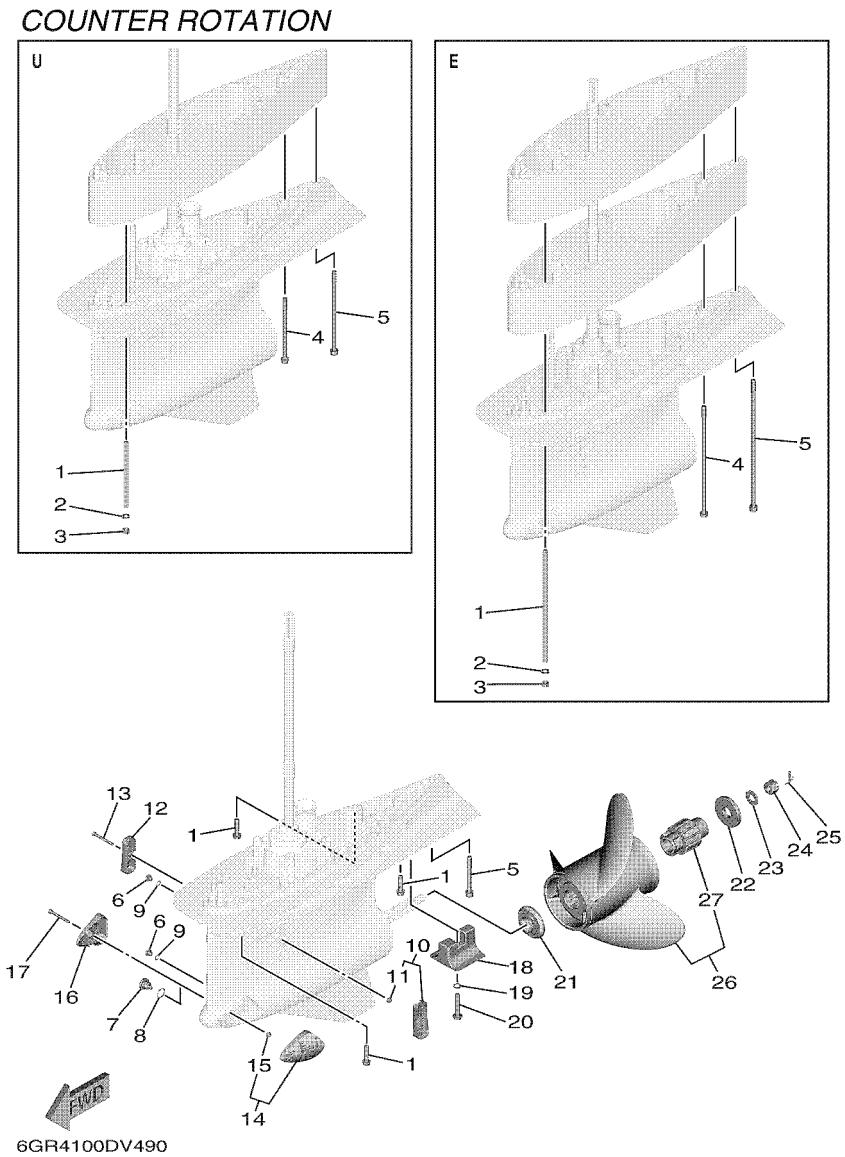

REF. NO.	PART NO. N° PIECES	DESCRIPTION DESCRIPTION	NS	NS2				REMARKS REMARQUES
1	90119–10024	BOLT, WITH WASHER BOULON, AVEC RONDELLE	9	9				UR X(25.2") UR X(25.2")
	90116–10067	BOLT, STUD GOUJON	8	8				UR U(30.2") UR U(30.2")
	90116–10066	BOLT, STUD GOUJON	8	8				UR E(35.2") UR E(35.2")
2	92995–10600	WASHER RONDELLE	8	8				U(30.2"),E(35.2") U(30.2"),E(35.2")
3	95380–10600	NUT ECROU	8	8				U(30.2"),E(35.2") U(30.2"),E(35.2")
4	90119–10009	BOLT, WITH WASHER BOULON, AVEC RONDELLE	1	1				UR U(30.2") UR U(30.2")
	90119–10060	BOLT, WITH WASHER BOULON, AVEC RONDELLE	1	1				UR E(35.2") UR E(35.2")
5	90110–10053	BOLT, HEXAGON SOCKET HEAD BOULON, TETE HEXAGONALE CREUSE	1	1				UR X(25.2") UR X(25.2")
	90110–10054	BOLT, HEXAGON SOCKET HEAD BOULON, TETE HEXAGONALE CREUSE	1	1				UR U(30.2") UR U(30.2")
	90110–10055	BOLT, HEXAGON SOCKET HEAD BOULON, TETE HEXAGONALE CREUSE	1	1				UR E(35.2") UR E(35.2")
6	90340–08003	PLUG, STRAIGHT SCREW PLOT, FILETE DROIT	2	2				
7	6GR–45341–00	PLUG, DRAIN BOUCHON DE VIDANGE	1	1				
8	93210–19123	O-RING JOINT TORIQUE	1	1				
9	93210–09165	O-RING JOINT TORIQUE	2	2				
10	6GR–45214–01	COVER, WATER INLET 1 GRILLE, ENTREE D'EAU 1	1	1				
11	90185–06M07	.NUT, SELF-LOCKING .ECROU,AUTO-BLOQUANT	1	1				
12	6GR–45215–01	COVER, WATER INLET 2 GRILLE, ENTREE D'EAU 2	1	1				
13	90110–06425	BOLT, HEXAGON SOCKET HEAD BOULON, TETE HEXAGONALE CREUSE	1	1				
14	6KN–45224–00	COVER, WATER INLET 3 GRILLE, ENTREE D'EAU 3	1	1				
15	90185–06M07	.NUT, SELF-LOCKING .ECROU,AUTO-BLOQUANT	1	1				
16	6KN–45225–00	COVER, WATER INLET 4 GRILLE, ENTREE D'EAU 4	1	1				
17	90110–06425	BOLT, HEXAGON SOCKET HEAD BOULON, TETE HEXAGONALE CREUSE	1	1				
18	6AW–45373–00	ANODE ANODE	1	1				
19	92990–10300	WASHER RONDELLE, PLATE	1	1				
20	90105–10257	BOLT, FLANGE BOULON, A COLLERETTE	1	1				
21	6GR–45987–00	SPACER 1 ENTRETOISE 1	1	1				
22	6GR–45997–00	SPACER 2 ENTRETOISE 2	1	1				

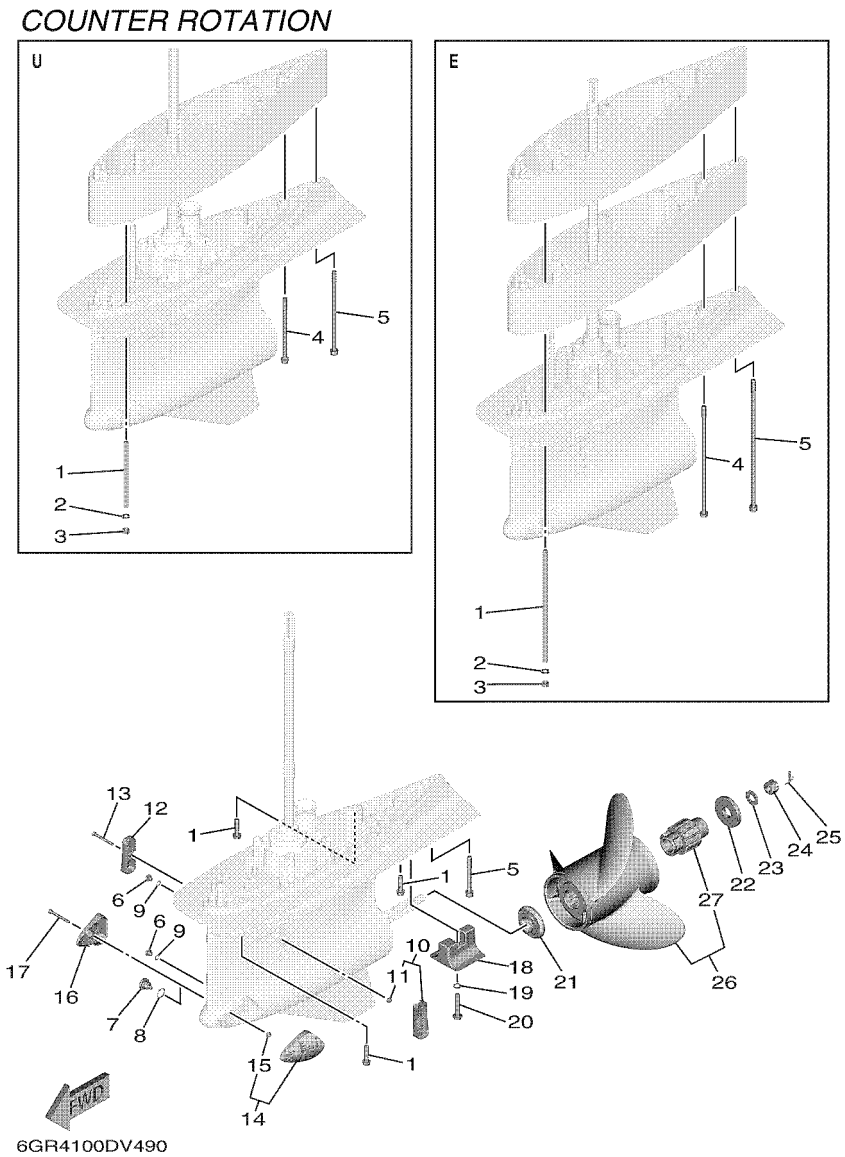

FIG. 48 LOWER CASING & DRIVE 6 — BOITIER D'HELICE TRANSMISSION6

REF. NO.	PART NO. N° PIECES	DESCRIPTION DESCRIPTION	NS	NS2				REMARKS REMARQUES
23	90201–19M01	WASHER, PLATE RONDELLE, PLATE	1	1				
24	90171–18M04	NUT, CASTLE ECROU, CRENELE	1	1				
25	91490–40030	PIN. COTTER GOUPILLE	1	1				
26	6GS–45970–10	PROPELLER (3X17-1/8"X15"-YL) HELICE (3X17-1/8"X15"-YL)	1	1				UR 3 BLADE UR 3 BLADE
	6GS–45972–10	PROPELLER (3X16-7/8"X17"-YL) HELICE (3X16-7/8"X17"-YL)	1	1				UR 3 BLADE UR 3 BLADE
	6GS–45974–10	PROPELLER (3X16-5/8"X19"-YL) HELICE (3X16-5/8"X19"-YL)	1	1				UR 3 BLADE UR 3 BLADE
	6GS–45976–10	PROPELLER (3X16-3/8"X21"-YL) HELICE (3X16-3/8"X21"-YL)	1	1				UR 3 BLADE UR 3 BLADE
	6GS–45978–10	PROPELLER (3X16-1/8"X23"-YL) HELICE (3X16-1/8"X23"-YL)	1	1				UR 3 BLADE UR 3 BLADE
	6GS–45930–10	PROPELLER (3X16"X25"-YL) HELICE (3X16"X25"-YL)	1	1				UR 3 BLADE UR 3 BLADE
	6GS–45938–10	PROPELLER (3X16-5/8"X18"-YL) HELICE (3X16-5/8"X18"-YL)	1	1				UR 3 BLADE UR 3 BLADE
	6GS–45936–10	PROPELLER (3X16-3/8"X20"-YL) HELICE (3X16-3/8"X20"-YL)	1	1				UR 3 BLADE UR 3 BLADE
	6GS–45934–10	PROPELLER (3X16-1/8"X22"-YL) HELICE (3X16-1/8"X22"-YL)	1	1				UR 3 BLADE UR 3 BLADE
	6GS–45932–10	PROPELLER (3X16"X24"-YL) HELICE (3X16"X24"-YL)	1	1				UR 3 BLADE UR 3 BLADE
	6GS–45D70–10	PROPELLER (3X16-7/8"X16"-YL) HELICE (3X16-7/8"X16"-YL)	1	1				UR 3 BLADE UR 3 BLADE
	6GS–45D72–10	PROPELLER (3X16"X26"-YL) HELICE (3X16"X26"-YL)	1	1				UR 3 BLADE UR 3 BLADE
	6GS–45D74–20	PROPELLER (3X16"X27"-YL2) HELICE (3X16"X27"-YL2)	1	1				UR 3 BLADE UR 3 BLADE
27	6GR–45C81–10	.DAMPER RUBBER, PROPELLER 1 .AMORTISSEUR HELICE 1	1	1				

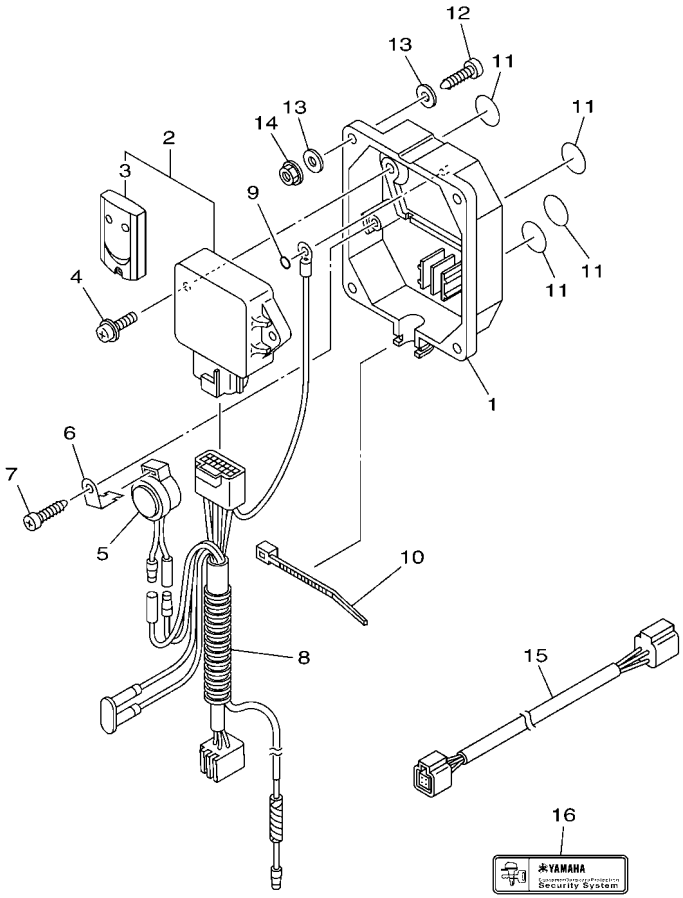

6CJ1100-K370

FIG. 49 OPTIONAL PARTS — PIECES OPTIONNELLES

REF. NO.	PART NO. N° PIECES	DESCRIPTION DESCRIPTION	NS	NS2				REMARKS REMARQUES
1	6Y8–86267–00	CASE COMPLETE 1 CARTER (ENS.) 1	1	1				
2	6Y8–86260–12	REMOTE CONTROL UNIT ASSY UNITE DE TELECOMMANDE (ENS.)	1	1				UR 315MHz UR 315MHz
	6Y8–86260–03	REMOTE CONTROL UNIT ASSY UNITE DE TELECOMMANDE (ENS.)	1	1				UR 433MHz UR 433MHz
3	6AA–86261–22	.XMTR. COMP. .XMTR. COMP.	2	2				UR FOR 315MHz UR FOR 315MHz
	6AA–86261–01	.XMTR. COMP. .XMTR. COMP.	2	2				UR FOR 433MHz UR FOR 433MHz
4	97980–06216	SCREW, WITH WASHER VIS, AVEC RONDELLE	2	2				
5	6X4–83383–00	BUZZER RONFLEUR	1	1				
6	6X4–83386–00	STAY, BUZZER SUPPOR, RONFLEUR	1	1				
7	97780–60620	SCREW, TAPPING VIS, TETE BOMBEE	1	1				
8	6Y8–82509–10	WIRE, SUB LEAD FIL, SECONDAIRE	1	1				
9	93210–04279	O-RING JOINT TORIQUE	1	1				
10	90465–11M10	CLAMP BRIDE	1	1				
11	6Y8–8454G–00	PATCH 1 TAMPON 1	4	4				
12	90167–06M00	SCREW, TAPPING VIS, TETE FRAISEE	4	4				UR UR
	97880–06035	SCREW, PAN HEAD VIS, TETE TRONCONIQUE	4	4				UR UR
13	90201–06M30	WASHER, PLATE RONDELLE, PLATE	8	8				
14	95780–06300	NUT, FLANGE ECROU	4	4				
15	6Y8–82521–11	2FT PIGTAIL BUS FAISCEAU (L: 2FT.)	1	1				
16	6Y8–48277–00	STICKER 1 ETIQUETTE 1	4	4				

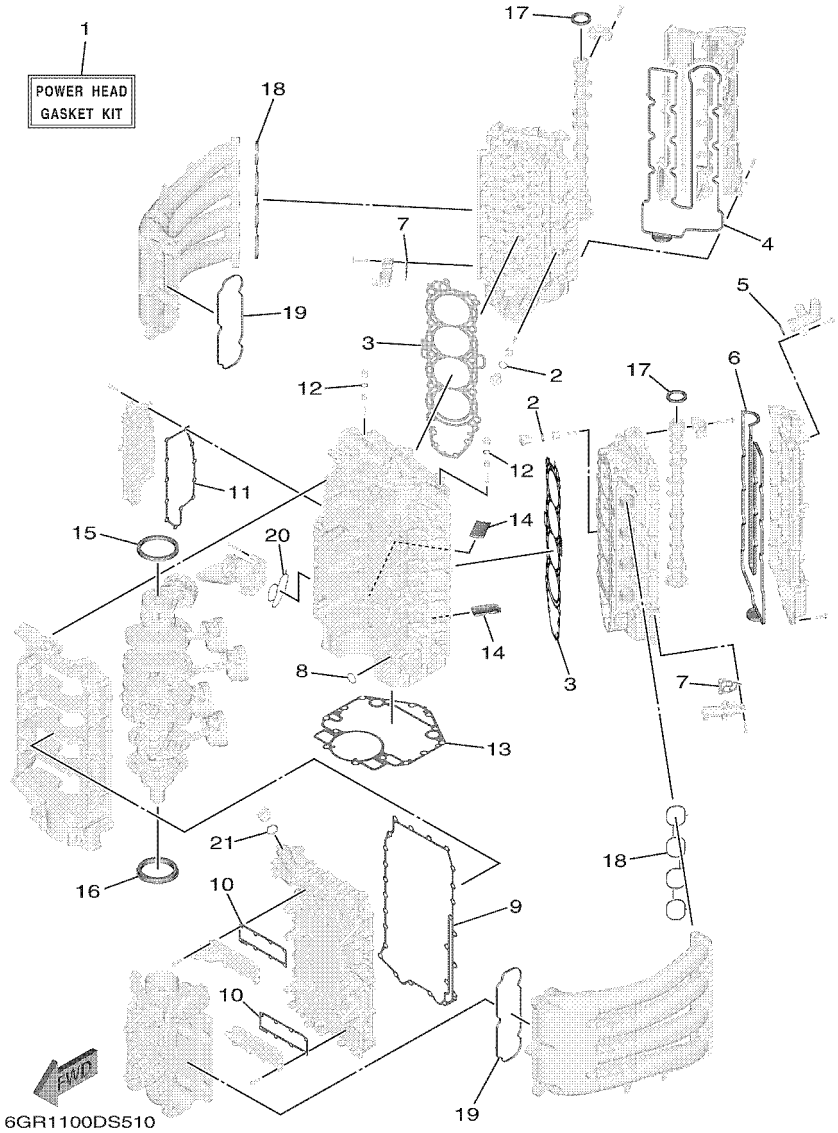

FIG. 50 REPAIR KIT 1 — KITS DE REPARATION 1

REF. NO.	PART NO. N° PIECES	DESCRIPTION DESCRIPTION	NS	NS2				REMARKS REMARQUES
1	6GR–W0001–01	POWER HEAD GASKET KIT POCHETTE DE JINTS TETE MOTRICE	1	1				
2	93210–19216	.O-RING .JOINT TORIQUE	6	6				
3	6GR–11181–00	.GASKET, CYLINDER HEAD 1 .JOINT, DE CULASSE 1	2	2				
4	6GR–11193–00	.GASKET, HEAD COVER 1 .JOINT, COUVERCLE DE CULASSE 1	1	1				
5	93210–28646	.O-RING .JOINT TORIQUE	1	1				
6	6GR–11194–00	.GASKET, HEAD COVER 2 .JOINT, COUVERCLE DE CULASSE 2	1	1				
7	6CB–1242F–00	.GASKET, FILTER .JOINT, FILTRE	2	2				
8	93210–26658	.O-RING .JOINT TORIQUE	1	1				
9	6GR–15451–00	.GASKET, CRANKCASE COVER 1 .JOINT, COUVERCLE DE CARTER 1	1	1				
10	6GR–1131B–00	.GASKET, COVER .JOINT, COUVERCLE	2	2				
11	6GR–15353–00	.GASKET, DRAIN .JOINT, PLOT DE VIDANGE	1	1				
12	93210–13M63	.O-RING .JOINT TORIQUE	2	2				
13	6GR–11351–00	.GASKET, CYLINDER .JOINT, D'EMBASE	1	1				
14	6GR–14664–01	.GROMMET, WATER SHUT .PASSE-FIL	2	2				
15	93102–90004	.OIL SEAL .JOINT SPY	1	1				
16	93102–85010	.OIL SEAL .JOINT SPY	1	1				
17	93102–38008	.OIL SEAL .JOINT SPY	2	2				
18	6GR–13645–00	.GASKET, MANIFOLD 1 .JOINT, TUBULURE 1	2	2				
19	6GR–13646–00	.GASKET, MANIFOLD 2 .JOINT, TUBULURE 2	2	2				
20	6GR–13477–00	.GASKET .JOINT	1	1				
21	93210–24M79	.O-RING .JOINT TORIQUE	1	1				

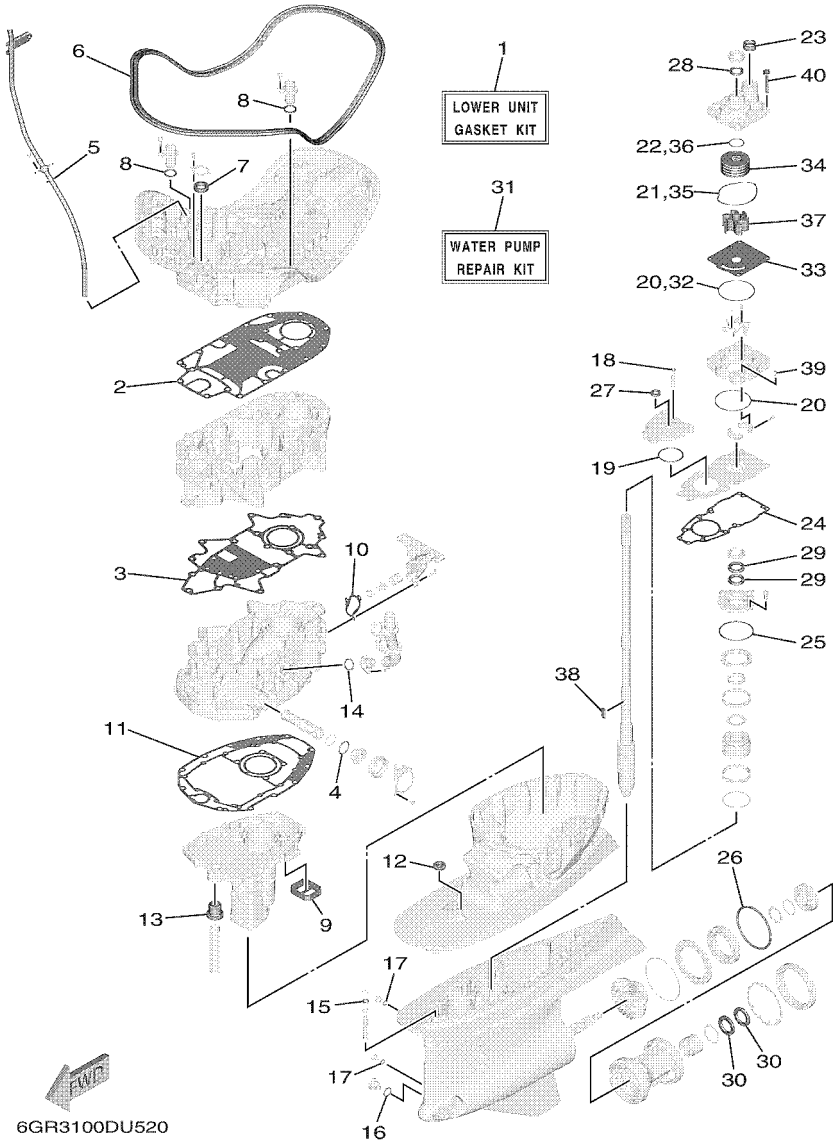

FIG. 51 REPAIR KIT 2 — KITS DE REPARATION 2

REF. NO.	PART NO. N° PIECES	DESCRIPTION DESCRIPTION	NS	NS2				REMARKS REMARQUES
1	6GR–W0001–22	LOWER UNIT GASKET KIT POCHETTE DE JOINTS EMBASE	1	1				
2	6GR–15312–00	.GASKET, OIL PAN .JOINT DE VENTILATEUR D'HUILE	1	1				
3	6GR–1531C–00	.GASKET, OIL PAN 2 .JOINT DE VENTILATEUR D'HUILE 2	1	1				
4	93210–34633	.O-RING .JOINT TORIQUE	1	1				
5	93210–19MJ3	.O-RING .JOINT TORIQUE	1	1				
6	6GR–42716–00	.RUBBER SEAL 1 .JOINT EN CAOUTCHOUC 1	1	1				
7	93102–26004	.OIL SEAL .JOINT SPY	1	1				
8	6GR–44366–01	.DAMPER, WATER SEAL 2 .JOINT, TUBE D'EAU 2	2	2				
9	6GR–45127–00	.SEAL .JOINT	1	1				
10	6EK–12435–A0	.GASKET .JOINT	1	1				
11	6GR–45113–00	.GASKET, UPPER CASING .JOINT, TUBE D'ARBRE	1	1				
12	6GR–44521–00	.SEAL .JOINT	1	1				
13	6GR–44367–01	.DAMPER, WATER SEAL 3 .JOINT TUBE D'EAU 3	1	1				
14	6GR–44366–01	.DAMPER, WATER SEAL 2 .JOINT, TUBE D'EAU 2	2	2				
15	93210–10010	.O-RING .JOINT TORIQUE	1	1				
16	93210–19123	.O-RING .JOINT TORIQUE	1	1				
17	93210–09165	.O-RING .JOINT TORIQUE	2	2				
18	93210–07100	.O-RING .JOINT TORIQUE	1	1				
19	93210–64488	.O-RING .JOINT TORIQUE	1	1				
20	93210–97690	.O-RING .JOINT TORIQUE	2	2				
21	93211–08001	.O-RING .JOINT TORIQUE	1	1				
22	93210–37160	.O-RING .JOINT TORIQUE	1	1				
23	6GR–44365–01	.DAMPER, WATER SEAL 1 .JOINT, TUBE D'EAU 1	1	1				
24	6GR–44315–00	.GASKET, WATER PUMP .JOINT, POMPE A EAU	1	1				
25	93210–89535	.O-RING .JOINT TORIQUE	1	1				
26	93211–26001	.O-RING .JOINT TORIQUE	1	1				
27	93106–14001	.OIL SEAL .JOINT SPY	1	1				

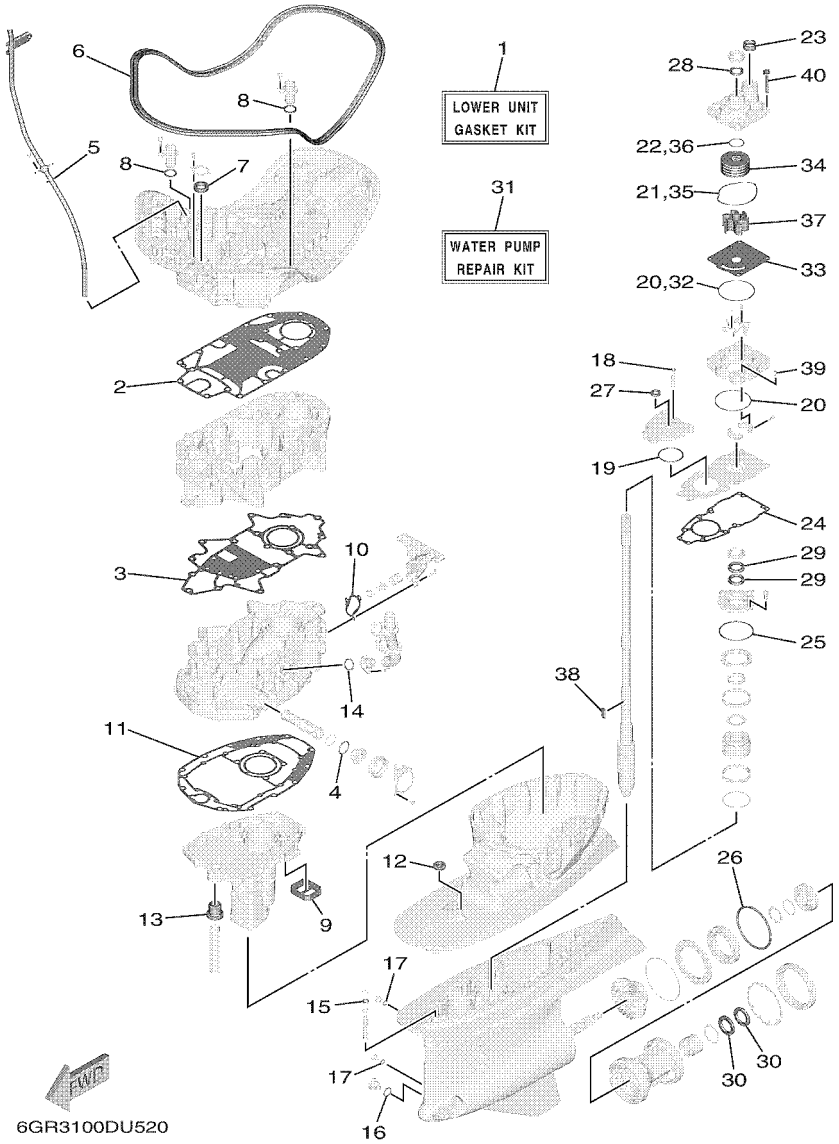

FIG. 51 REPAIR KIT 2 — KITS DE REPARATION 2

REF. NO.	PART NO. N° PIECES	DESCRIPTION DESCRIPTION	NS	NS2				REMARKS REMARQUES
28	93109–26001	.OIL SEAL .JOINT SPY	1	1				
29	93101–30037	.OIL SEAL .JOINT SPY	2	2				
30	93101–37001	.OIL SEAL .JOINT SPY	2	2				
31	6GR–W0078–01	WATER PUMP REPAIR KIT KIT DE REPARATION DE LA POMPE	1	1				
32	93210–97690	.O-RING .JOINT TORIQUE	1	1				
33	6GR–44323–00	.OUTER PLATE, CARTRIDGE .PLAQUE EXTERIEURE	1	1				
34	6GR–44322–00	.INSERT, CARTRIDGE .CUVETTE	1	1				
35	93211–08001	.O-RING .JOINT TORIQUE	1	1				
36	93210–37160	.O-RING .JOINT TORIQUE	1	1				
37	6GR–44352–00	.IMPELLER .TURBINE	1	1				
38	6AW–44336–00	.KEY .CLAVETTE	1	1				
39	93606–12019	.PIN, DOWEL .GOUPILLE	2	2				
40	90119–08196	.BOLT, WITH WASHER .BOULON, AVEC RONDELLE	4	4				

PART NO. N° PIECES	REF. NO.
6GR–11000–01	3 – 1
6GR–11110–00	5 – 2
6GR–11120–00	5 – 12
6DA–11133–10	5 – 3
	5 – 13
6GR–11135–00	6 – 2
6GR–11136–00	6 – 10
6GR–11181–00	5 – 25
	50 – 3
6GR–11186–01	22 – 22
6GR–11187–01	22 – 28
6GR–11191–00–9S	6 – 1
6GR–11192–00–9S	6 – 6
6GR–11193–00	6 – 4
	50 – 4
6GR–11194–00	6 – 12
	50 – 6
6GR–11197–00	5 – 21
6G8–11197–A0	3 – 38
	13 – 4
	14 – 8
6GR–1131B–00	3 – 20
	50 – 10
6G8–11325–00	1 – 4
	1 – 8
	1 – 9
	3 – 37
	13 – 6
	14 – 10
6AW–1132L–00	1 – 1
	5 – 23
6AW–1132P–00	1 – 2
	3 – 31
6GR–11351–00	3 – 43
	50 – 13
6GR–1135A–00	3 – 41
6GR–11372–00	6 – 7
6GR–11411–01	4 – 1
6GR–11416–00	4 – 11
6GR–11416–10	4 – 11
6GR–11416–20	4 – 11
6GR–11416–30	4 – 11
6GR–11417–00	4 – 12
6GR–11417–10	4 – 12
6GR–11417–20	4 – 12
6GR–11417–30	4 – 12
6GR–11426–00	4 – 15
6CB–11426–03	4 – 13

PART NO. N° PIECES	REF. NO.
6GR–11427–00	4 – 16
6CB–11427–03	4 – 14
6GR–11567–00	9 – 6
6P2–11590–02	9 – 16
6GR–115A0–00	9 – 5
6GR–11603–00	4 – 20
6GR–11631–00	4 – 19
6GR–11633–00	4 – 21
6GR–11634–00	4 – 22
63P–11654–10	4 – 18
6GR–11656–00	4 – 23
6GR–11656–10	4 – 23
6GR–11656–20	4 – 23
6GR–11927–00	6 – 19
6GR–12111–00	8 – 1
6CB–12113–00	8 – 4
51Y–12119–00	8 – 7
6DX–12121–00	8 – 2
6GR–12145–00	8 – 8
6GR–12145–10	8 – 8
6GR–12145–20	8 – 8
6GR–12145–30	8 – 8
6GR–12145–40	8 – 8
6GR–12145–50	8 – 8
6GR–12145–60	8 – 8
6GR–12153–00	8 – 8
6GR–12153–10	8 – 8
6GR–12153–20	8 – 8
6GR–12153–30	8 – 8
6GR–12153–40	8 – 8
6GR–12153–50	8 – 8
6GR–12153–60	8 – 8
6GR–12153–70	8 – 8
6GR–12153–80	8 – 8
6GR–12153–90	8 – 8
6GR–12153–A0	8 – 8
6GR–12153–B0	8 – 8
6GR–12153–C0	8 – 8
6GR–12153–D0	8 – 8
6GR–12153–E0	8 – 8
6GR–12153–F0	8 – 8
6GR–12153–G0	8 – 8
6GR–12153–H0	8 – 8
6GR–12153–J0	8 – 8
6GR–12153–K0	8 – 8
6GR–12153–L0	8 – 8
6GR–12153–M0	8 – 8
6GR–12153–N0	8 – 8

PART NO. N° PIECES	REF. NO.
6GR–12153–P0	8 – 8
6GR–12153–R0	8 – 8
6GR–12153–S0	8 – 8
6GR–12153–T0	8 – 8
6GR–12171–00	9 – 1
6GR–12172–00	9 – 3
6GR–12181–00	9 – 2
6GR–12182–00	9 – 4
6GR–12199–00	4 – 8
6GR–12210–00	9 – 12
6GR–12230–00	9 – 13
6GR–12411–00	1 – 3
	3 – 33
66M–12411–01	1 – 19
	3 – 25
6H3–12411–20	1 – 18
	3 – 17
688–12412–00	3 – 26
6GR–12412–00	3 – 34
6H3–12412–10	3 – 18
6GR–12413–00	3 – 35
6G5–12416–00	42 – 22
6GR–12417–00–9S	3 – 22
6GR–1241B–00–9S	3 – 29
6CB–1242F–00	6 – 15
	50 – 7
6EK–12435–A0	42 – 27
	51 – 10
6GR–12439–00	18 – 13
6GR–1243A–00	7 – 8
6GR–1243E–00	7 – 9
6GR–1243F–00	42 – 28
6GR–1244H–00	7 – 13
6GR–1244J–00	7 – 1
6GR–12451–00	43 – 18
	46 – 18
6GR–1246A–00	42 – 21
6GR–12482–00	14 – 23
6GR–12491–00	41 – 12
6GR–12551–00	7 – 6
6R3–12572–00	28 – 11
6GR–12577–00	28 – 16
6GR–1257A–01	42 – 29
6GR–12581–00	42 – 30
6R3–12581–00	28 – 13
6GR–12582–00	28 – 14
6R3–12583–00	28 – 15
6GR–12584–00	39 – 19

PART NO. N° PIECES	REF. NO.
6GR–12594–00	7 – 12
6GR–12645–00	9 – 8
6GR–12651–00	20 – 9
6GR–12653–01	20 – 12
6GR–12659–00	20 – 14
6GR–13016–00	18 – 7
6GR–13160–09	18 – 20
6GR–13188–00	4 – 4
6GR–13300–01	12 – 1
6GR–13411–00	1 – 6
	42 – 15
6GR–13437–61	20 – 26
N26–13440–03	1 – 7
	12 – 3
6GR–13446–00	12 – 5
67F–13448–00	2 – 18
6GR–13473–00	12 – 11
6GR–13477–00	12 – 6
	50 – 20
6GR–13490–00	12 – 10
6GR–13556–00	11 – 4
68V–13577–01	15 – 18
6CB–13593–00	15 – 15
6GR–13593–00	15 – 9
6GR–13641–00	10 – 7
63P–13643–00	11 – 9
6GR–13645–00	10 – 8
	50 – 18
6GR–13646–00	10 – 9
	50 – 19
6GR–13711–00	11 – 3
6GR–13716–00	15 – 16
6GR–13750–00	11 – 1
6GR–13751–00	11 – 2
6GR–13761–00	18 – 21
6GR–13781–00	15 – 5
6GR–13898–00	11 – 5
6GR–13910–00	18 – 12
6GR–13938–00	15 – 8
6GR–14197–00	15 – 17
6GR–14295–00	18 – 17
6GR–14296–00	18 – 18
6AW–1441J–01	10 – 3
6GR–14440–00	10 – 1
6FM–14562–00	15 – 14
6GR–14567–00	15 – 19
6GR–14613–00	13 – 3
6GR–14615–01–9S	13 – 1

PART NO. N° PIECES	REF. NO.
6GR–14625–01–9S	13 – 2
6GR–14635–00–9S	14 – 1
6GR–14643–00	14 – 16
6GR–14645–00–9S	14 – 4
6GR–14656–00–9S	14 – 14
6GR–14664–01	3 – 44
	50 – 14
6GR–14711–01	40 – 1
6GR–14753–00	39 – 26
6GR–15109–01–9S	3 – 2
6P2–15187–00	3 – 7
6GR–15311–01	42 – 8
6GR–15312–00	42 – 1
	51 – 2
6GR–15316–01	42 – 20
6GR–1531A–00	10 – 12
6GR–1531A–10	10 – 13
6GR–1531B–01	42 – 2
6GR–1531C–00	42 – 3
	51 – 3
6GR–15351–00	42 – 12
6GR–15353–00	3 – 27
	50 – 11
6GR–15362–00	42 – 16
6G8–15363–00	12 – 8
6GR–15377–00	42 – 17
6GR–15411–00–9S	3 – 11
6GR–15413–00–9S	3 – 24
6GR–15414–01–9S	3 – 16
6GR–15423–00–9S	3 – 19
6GR–15451–00	3 – 13
	50 – 9
6GR–2153A–00	2 – 23
6GR–2153B–00	2 – 24
6GR–21841–00	15 – 13
6GR–22472–00	37 – 28
6GR–23113–00	38 – 47
6GR–2318F–00	41 – 8
6GR–2318K–00	26 – 9
6GR–24113–00	15 – 22
6GR–2415H–00	15 – 23
6GR–24196–00	15 – 10
6GR–2419A–00	15 – 11
6GR–24217–00	17 – 11
6GR–24218–00	15 – 4
6GR–24220–03	15 – 1
6GR–24223–00	15 – 2
6GR–24224–01	15 – 3

PART NO. N° PIECES	REF. NO.
6GR–24251–00	18 – 5
6AW–24300–01	17 – 8
	18 – 8
6P2–24300–01	16 – 38
6AW–24300–11	15 – 21
	17 – 7
6GR–24311–00	16 – 3
6GR–24312–00	16 – 16
6GR–24313–00	17 – 1
6GR–24314–00	17 – 2
6GR–24315–00	17 – 3
6GR–24316–00	17 – 4
6GR–24317–10	17 – 5
6GR–24321–00	16 – 19
6GR–24322–00	16 – 34
6GR–24323–00	16 – 37
6GR–24324–00	16 – 40
6GR–24325–00	16 – 44
6E5–24351–51	16 – 4
6AW–24360–02	19 – 1
6GR–24376–00	7 – 5
6AW–24377–01	16 – 2
688–24378–00	14 – 24
6E5–24378–00	16 – 17
6GR–24378–00	28 – 18
6E5–24379–00	41 – 9
6GR–243A1–00	18 – 1
6GR–243A2–00	18 – 2
6GR–243A3–00	18 – 3
6GR–243A4–00	18 – 4
6GR–24408–01	17 – 10
6R5–24408–10	16 – 35
6GR–24410–01	16 – 22
6GR–2441R–00	15 – 6
6GR–24420–10	15 – 20
6GR–24425–00	16 – 20
6GR–24426–00	16 – 27
6GR–24430–00	15 – 12
6GR–24452–00	28 – 29
6GR–24460–01	17 – 12
6GR–24460–20	16 – 41
6CB–24461–00	17 – 9
	18 – 9
6GR–24462–01	16 – 24
6GR–24491–00	16 – 26
6DA–24492–01	16 – 23
6GR–244A1–00	15 – 7
6GR–24501–00	18 – 6

PART NO. N° PIECES	REF. NO.
6GR–24560–01	16 – 5
6GR–24561–00	16 – 6
6P3–24563–02	1 – 10
	16 – 8
6P3–24564–00	1 – 11
	16 – 7
6GR–24566–00	16 – 11
6GR–24568–01	16 – 9
6GR–24595–01	18 – 14
6GR–24596–01	16 – 48
6GR–24599–01	18 – 22
6GR–2464E–01	17 – 17
6GR–24864–00	35 – 9
6KN–24864–00	35 – 45
6GR–28100–11	32 – 7
6CB–2812A–00	24 – 9
6GR–28199–75–D0	32 – 8
6GR–28199–75–E0	32 – 8
6GR–28199–75–F0	32 – 8
6GR–28199–75–G0	32 – 8
6GR–28199–75–H0	32 – 8
6GR–28199–75–S0	32 – 8
6GR–28199–85–K0	32 – 9
6GR–28199–85–L0	32 – 9
6GR–28199–85–M0	32 – 9
6GR–28199–85–N0	32 – 9
6GR–28199–85–P0	32 – 9
6GR–28199–85–R0	32 – 9
6GR–41114–00	14 – 15
6GR–41124–00	14 – 7
6GR–41134–00	14 – 19
6GR–41137–00	39 – 1
6GR–41297–00	39 – 5
6GR–42134–00	35 – 29
6GR–42195–00	33 – 12
6BG–42384–00	39 – 9
6DA–42384–00	39 – 15
6GR–42384–00	39 – 12
6GR–42401–13	35 – 25
6GR–42477–00	2 – 3
6GR–42510–01–8D	36 – 1
6GR–42532–00	29 – 2
6GR–42533–00	29 – 9
6GR–42541–00	7 – 2
6GR–42610–03–8D	2 – 1
6GR–42610–03–CE	2 – 1
6GR–42615–00	29 – 16
6GR–4261A–03–8D	2 – 2

PART NO. N° PIECES	REF. NO.
6GR–4261A–03–CE	2 – 2
6GR–42622–01	29 – 7
6GR–42623–01	29 – 14
6GR–42625–00–8D	29 – 25
6GR–42625–00–CE	29 – 25
6GR–42629–00	2 – 20
6GR–42643–00	2 – 8
6GR–42647–00	2 – 5
6GR–42648–00	2 – 6
6GR–42649–00	2 – 7
663–42662–01	2 – 17
6AW–42663–01	2 – 9
6GR–42675–00	2 – 21
6GR–42676–00	2 – 22
6GR–42677–00	2 – 25
6GR–42678–00	32 – 5
6GR–4267A–10	32 – 4
6GR–42682–00	32 – 6
6DA–42697–00	35 – 5
6AW–42697–10	32 – 1
6GR–42711–01–8D	28 – 1
6GR–42711–01–CE	28 – 1
6GR–42712–01–8D	29 – 1
6GR–42712–01–CE	29 – 1
6GR–42713–01–8D	29 – 8
6GR–42713–01–CE	29 – 8
6GR–42716–00	39 – 30
	51 – 6
61A–42717–00	34 – 13
6GR–42717–00	28 – 8
6DA–42717–01	39 – 14
6GR–42718–00	28 – 9
6GR–42721–00	29 – 3
6GR–42722–00	29 – 10
6AW–42724–01	39 – 7
6GR–42724–01	39 – 11
6GR–42725–02	28 – 5
6H1–42726–22	39 – 8
6GR–42740–00–8D	31 – 1
6GR–42740–00–CE	31 – 1
6GR–42743–00	6 – 20
6GR–42744–00	29 – 5
	29 – 12
60V–42747–10	39 – 17
6GR–42748–01	29 – 26
6H4–42748–01	28 – 10
6GR–42753–00	28 – 26
6GR–42758–00	29 – 19

PART NO. N° PIECES	REF. NO.
6GR–42758–00	29 – 28
6GR–42761–00	28 – 6
6GR–42768–01	29 – 24
6GR–42769–00	29 – 17
6GR–42770–00–8D	31 – 5
6GR–42770–00–CE	31 – 5
6GR–42774–00–CA	31 – 3
69J–42774–10	29 – 23
	31 – 9
6GR–42775–00–CA	31 – 7
6GR–42783–00	32 – 2
6GR–42784–00	32 – 3
6AW–42785–00	41 – 4
6EE–42794–40	28 – 31
6EE–42794–50	28 – 32
6GR–42815–00–8D	30 – 1
6GR–42815–00–CE	30 – 1
6GR–42816–01–8D	30 – 2
6GR–42816–01–CE	30 – 2
6GR–42817–01–8D	30 – 3
6GR–42817–01–CE	30 – 3
6GR–42818–00	30 – 14
6GR–42819–00	30 – 15
6GR–42828–00	30 – 4
6GR–42829–00	30 – 5
6GR–42833–00	30 – 10
68T–42835–00	30 – 9
6GR–42835–00	30 – 7
6GR–4311A–00–8D	34 – 1
6GR–4311A–00–CE	34 – 1
6GR–4311B–00–8D	34 – 7
6GR–4311B–00–CE	34 – 7
6GR–43121–00	35 – 36
6GR–43126–00	35 – 23
6GR–43144–00	34 – 19
6G5–43148–00	34 – 24
6GR–43181–00	34 – 21
6GR–43185–00	34 – 22
6GR–43311–02–8D	34 – 17
6GR–43311–02–CE	34 – 17
6GR–43318–00–8D	35 – 7
6GR–43318–00–CE	35 – 7
6GR–43333–00	34 – 14
6GR–43341–00	35 – 1
6GR–43342–00	35 – 2
6GR–43376–01	34 – 30
6GR–43378–10	35 – 43
6GR–43654–00	37 – 17

PART NO. N° PIECES	REF. NO.
6GR–43800–08	37 – 1
6GR–43801–00	37 – 4
6GR–43804–00	38 – 3
6GR–43805–00	38 – 2
6GR–4380F–00	38 – 6
6C5–4380G–00	38 – 44
6GR–4380K–00	37 – 21
6GR–4380L–02	37 – 42
6GR–43810–00	37 – 3
6GR–43811–00	37 – 9
6GR–43812–00	37 – 5
63P–43812–20	37 – 34
6GR–43814–00	37 – 20
6C5–43816–00	38 – 43
69J–43817–00	37 – 44
6C6–43817–00	38 – 41
6GR–43818–00	37 – 27
6GR–4381E–00	34 – 9
6GR–4381F–00	34 – 10
6GR–4381J–00	35 – 19
6GR–43820–00	37 – 37
61A–43821–02	37 – 35
6GR–43827–00	37 – 18
6GR–43828–00	37 – 47
6EK–43829–00	37 – 50
6GR–4382A–00	35 – 21
6GR–4382E–00	37 – 11
6D8–4382L–00	38 – 34
6GR–43830–00	38 – 13
6GR–43835–00	37 – 22
6GR–4383E–01	26 – 5
6GR–4383K–00	41 – 3
6GR–43840–00	37 – 2
6CJ–43841–00	38 – 15
6D8–43843–00	38 – 29
6D8–43844–00	38 – 28
6H1–43844–10	38 – 32
6GR–43845–00	37 – 30
69A–4384F–00	38 – 18
6H1–4384G–11	38 – 31
69J–4384H–00	37 – 10
61A–4384H–10	37 – 40
6CJ–4384M–00	38 – 17
6GR–43851–00	38 – 24
6C6–43853–00	38 – 21
6C5–43854–00	38 – 36
6C5–43855–10	38 – 26
6GR–43856–00	38 – 33

PART NO. N° PIECES	REF. NO.
61A–43861–00	37 – 32
6GR–43861–00	37 – 26
6GR–43862–00	37 – 24
6D8–43863–00	37 – 33
6GR–43863–00	37 – 8
61A–43864–00	37 – 39
6GR–43864–01	38 – 12
6GR–4386K–00	38 – 7
6GR–43871–00	37 – 14
6GR–43872–00	37 – 7
6GR–43873–00	43 – 5
	46 – 5
61A–43874–00	37 – 38
61A–43875–10	37 – 41
61A–43876–01	37 – 31
67C–43879–10	38 – 9
6C6–4387G–00	38 – 20
6GR–43880–02	38 – 1
6GR–43881–02	38 – 10
6GR–43882–01	38 – 11
6H1–43883–00	38 – 16
69J–43888–00	37 – 48
69J–4388F–00	37 – 45
6GR–4388F–00	37 – 25
6GR–4388H–00	37 – 43
6GR–43892–00	38 – 4
6GR–43895–00	38 – 35
69J–4389J–00	38 – 23
	38 – 42
6GR–438A0–02	35 – 31
6GR–44117–00	33 – 6
6GR–44120–01	33 – 20
6GR–44121–00	33 – 17
6CE–44122–00	33 – 11
6GR–44150–01	43 – 15
6GS–44150–01	46 – 15
6GR–44150–11	43 – 15
6GS–44150–11	46 – 15
6GR–44150–21	43 – 15
6GS–44150–21	46 – 15
6GR–44194–01	36 – 22
6GR–44311–00	43 – 25
	46 – 25
6GR–44312–00	43 – 27
	46 – 27
6GR–44315–00	43 – 36
	46 – 36
	51 – 24

PART NO. N° PIECES	REF. NO.
6GR–44322–00	43 – 28
	46 – 28
	51 – 34
6GR–44323–00	43 – 24
	46 – 24
	51 – 33
6GR–44328–00	43 – 35
	46 – 35
6GR–44331–00	35 – 26
6GR–44332–00	35 – 27
6AW–44336–00	43 – 34
	46 – 34
	51 – 38
6GR–44341–00	43 – 17
	46 – 17
6GR–44352–00	43 – 33
	46 – 33
	51 – 37
6GR–44365–01	43 – 31
	46 – 31
	51 – 23
6GR–44366–01	39 – 20
	42 – 32
	51 – 8
	51 – 14
6GR–44367–01	40 – 12
	51 – 13
6GR–44379–00	43 – 32
	46 – 32
6GR–44381–00	43 – 21
	46 – 21
6GR–44382–00	43 – 22
	46 – 22
6GR–44391–00	39 – 16
6GR–44511–00–CA	36 – 25
6GR–44514–00	36 – 19
6GR–44515–00	36 – 20
6GR–44521–00	40 – 11
	51 – 12
6G5–44526–00	34 – 3
6GR–44533–00	36 – 24
6GR–44551–00–CA	36 – 6
6AW–44552–00–CA	36 – 17
6GR–44554–00	28 – 24
6AW–44555–00	36 – 9
6GR–44575–01	36 – 8
6GR–45111–00–8D	40 – 6
6GR–45111–00–CE	40 – 6

PART NO. N° PIECES	REF. NO.
6GR–45113–00	40 – 7
	51 – 11
6GR–45127–00	40 – 5
	51 – 9
6GR–45135–00	39 – 28
6GR–45141–00–8D	31 – 13
6GR–45141–00–CE	31 – 13
6GR–45152–00	42 – 34
6GR–45159–01	41 – 14
6GR–45211–00–8D	40 – 14
	40 – 14
6GR–45211–00–CE	40 – 14
	40 – 14
6GR–45214–01	45 – 10
	48 – 10
6GR–45215–01	45 – 12
	48 – 12
6KN–45224–00	45 – 14
	48 – 14
6KN–45225–00	45 – 16
	48 – 16
6GR–45244–00	43 – 51
	46 – 51
6AW–45251–00	1 – 12
	34 – 2
6GR–45300–06–8D	43 – 1
6GS–45300–06–8D	46 – 1
6GR–45300–06–CE	43 – 1
6GS–45300–06–CE	46 – 1
6GR–45300–16–8D	43 – 1
6GS–45300–16–8D	46 – 1
6GR–45300–16–CE	43 – 1
6GS–45300–16–CE	46 – 1
6GR–45300–26–8D	43 – 1
6GS–45300–26–8D	46 – 1
6GR–45300–26–CE	43 – 1
6GS–45300–26–CE	46 – 1
6GR–45308–00	43 – 3
	46 – 3
6GR–45309–00	43 – 10
	46 – 10
6GR–45311–02–8D	43 – 2
	46 – 2
6GR–45311–02–CE	43 – 2
	46 – 2
6GR–45318–00	40 – 10
6GR–45321–00	43 – 9
	46 – 9

PART NO. N° PIECES	REF. NO.
6GR–45332–00	44 – 33
6GS–45332–00	47 – 33
6GR–45335–00	43 – 41
	46 – 41
6GR–45341–00	45 – 7
	48 – 7
6GR–45344–00	43 – 40
	46 – 40
6GR–45368–00	41 – 1
6GR–45369–00	41 – 6
6AW–45373–00	1 – 15
	45 – 18
	48 – 18
6GR–45375–01	40 – 19
	40 – 19
	43 – 8
	46 – 8
6GR–45376–00	43 – 7
	46 – 7
6GR–45383–00	44 – 38
	47 – 38
6GR–45384–00	44 – 39
	47 – 39
6GR–45393–00	26 – 2
	26 – 7
6GR–45394–01	26 – 1
6GR–45395–00	26 – 6
6GR–45398–00	40 – 15
	40 – 15
6GR–45399–00	40 – 17
	40 – 17
6GR–45501–00	43 – 49
	46 – 49
6GR–45501–10	43 – 49
	46 – 49
6GR–45501–20	43 – 49
	46 – 49
6GR–45539–00	43 – 50
	46 – 50
6GR–45551–00	44 – 8
	47 – 8
6GR–45561–00	44 – 10
6GS–45561–00	47 – 10
6GR–45567–00	44 – 5
	47 – 5
688–45567–01	43 – 45
	46 – 45
688–45567–10	43 – 45

PART NO. N° PIECES	REF. NO.
688–45567–10	46 – 45
6GR–45567–10	44 – 5
	47 – 5
688–45567–20	43 – 45
	46 – 45
6GR–45567–20	44 – 5
	47 – 5
688–45567–30	43 – 45
	46 – 45
6GR–45567–30	44 – 5
	47 – 5
688–45567–40	43 – 45
	46 – 45
6GR–45567–40	44 – 5
	47 – 5
688–45567–50	43 – 45
	46 – 45
6GR–45567–50	44 – 5
	47 – 5
688–45567–60	43 – 45
	46 – 45
6GR–45567–60	44 – 5
	47 – 5
6GR–45567–70	44 – 5
	47 – 5
6GR–45571–00	44 – 25
6GS–45571–00	47 – 26
6GR–45576–00	44 – 27
	47 – 28
6GR–45577–00	44 – 28
	47 – 29
6GR–45577–10	44 – 28
	47 – 29
6GR–45577–20	44 – 28
	47 – 29
6GR–45577–30	44 – 28
	47 – 29
6GR–45577–40	44 – 28
	47 – 29
6GR–45577–50	44 – 28
	47 – 29
6GR–45577–60	44 – 28
	47 – 29
6GR–45578–00	44 – 31
6K1–45578–01	47 – 31
6GR–45578–10	44 – 31
6K1–45578–10	47 – 31
6GR–45578–20	44 – 31

PART NO. N° PIECES	REF. NO.
6K1–45578–20	47 – 31
6GR–45578–30	44 – 31
6K1–45578–30	47 – 31
6GR–45578–40	44 – 31
6K1–45578–40	47 – 31
6GR–45578–50	44 – 31
6K1–45578–50	47 – 31
6GR–45578–60	44 – 31
6K1–45578–60	47 – 31
6GR–45578–70	44 – 31
6GR–45611–00	44 – 14
6GS–45611–01	47 – 15
6GR–45631–00	44 – 17
	47 – 18
6GR–45632–00	44 – 16
	47 – 17
6GR–45633–00	44 – 18
	47 – 19
6GR–45634–00	44 – 15
	47 – 16
61A–45635–00	44 – 20
	47 – 21
6H1–45668–00	44 – 19
	47 – 20
6GR–45824–00	44 – 6
	47 – 6
6GR–45930–10	45 – 26
6GS–45930–10	48 – 26
6GR–45932–10	45 – 26
6GS–45932–10	48 – 26
6GR–45934–10	45 – 26
6GS–45934–10	48 – 26
6GR–45936–10	45 – 26
6GS–45936–10	48 – 26
6GR–45938–10	45 – 26
6GS–45938–10	48 – 26
6GR–45970–10	45 – 26
6GS–45970–10	48 – 26
6GR–45972–10	45 – 26
6GS–45972–10	48 – 26
6GR–45974–10	45 – 26
6GS–45974–10	48 – 26
6GR–45976–10	45 – 26
6GS–45976–10	48 – 26
6GR–45978–10	45 – 26
6GS–45978–10	48 – 26
6GR–45987–00	45 – 21
	48 – 21

PART NO. N° PIECES	REF. NO.
6GR–45997–00	45 – 22
	48 – 22
6GR–45C81–10	45 – 27
	48 – 27
6GR–45D70–10	45 – 26
6GS–45D70–10	48 – 26
6GR–45D72–10	45 – 26
6GS–45D72–10	48 – 26
6GR–45D74–20	45 – 26
6GS–45D74–20	48 – 26
6GR–47445–00	35 – 37
6GR–47716–00	35 – 34
6GR–4820A–01	33 – 1
6Y8–48277–00	49 – 16
6GR–48538–00	35 – 32
6GR–48539–00	35 – 40
F2S–6411H–00	2 – 19
6GR–68303–00	33 – 25
6GR–762W0–01	23 – 13
68V–81147–00	11 – 8
6GR–8132G–00	21 – 16
6GR–81410–00	20 – 3
6GR–81443–00	26 – 10
6GR–81639–01	20 – 21
6GR–81662–00	26 – 3
6GR–81673–00	4 – 5
6AW–81800–00	27 – 1
6AW–81807–00	27 – 3
6AW–81808–00	27 – 8
6AW–81810–00	27 – 16
6AW–81820–00	27 – 18
6AW–81826–00	27 – 19
6AW–81830–00	27 – 2
6AW–81832–00	27 – 7
6AW–81836–00	27 – 4
6AW–81839–00	27 – 14
6AW–8183R–00	27 – 11
6AW–8183T–00	27 – 6
6AW–81840–00	27 – 17
6AW–81842–00	27 – 15
6GR–81845–00	26 – 13
6AW–81846–00	27 – 20
6AW–81850–00	27 – 13
6AW–81854–00	27 – 12
6AW–81857–00	27 – 9
6AW–81862–00	27 – 10
6AW–81891–00	27 – 5
6GR–818D2–00	21 – 17

PART NO. N° PIECES	REF. NO.
6GR–81916–00	23 – 4
6GR–81919–01	24 – 12
6GR–81919–11	24 – 13
6GR–81919–20	24 – 14
6P2–81923–00	23 – 15
6GR–81925–00	23 – 3
6GR–81929–00–9S	23 – 7
6AW–81941–00	27 – 21
6GR–81942–01	20 – 16
6GR–81948–02	21 – 7
6GR–81949–01	23 – 14
68V–81950–00	21 – 24
6GR–81960–00	21 – 13
6GR–81975–00	21 – 14
6EE–81994–40	20 – 27
6EE–81994–50	20 – 28
6AH–81996–00	28 – 33
6GR–82105–02	23 – 17
6P2–82113–00	24 – 10
6GR–82117–00	23 – 10
6T4–82117–00	36 – 27
6AW–82119–00	23 – 18
6GR–82119–00	24 – 17
	25 – 3
	25 – 11
6AW–82119–10	23 – 12
6GR–82119–10	23 – 11
	25 – 12
6AW–82119–20	23 – 19
6GR–82131–01	26 – 15
6GR–82147–00	34 – 11
6GR–82149–00	36 – 13
6CB–82151–00	24 – 4
6GR–82151–00	24 – 3
6CB–82151–10	24 – 5
6GR–82151–10	24 – 2
6CB–82151–20	24 – 6
6CB–82151–30	24 – 7
6GR–82171–01	24 – 24
6GR–82181–00	38 – 5
6GR–82310–02	22 – 1
6GR–82316–00	6 – 17
6A0–82317–01	20 – 19
	20 – 24
	22 – 24
	22 – 30
6GR–82386–00	22 – 9
6GR–82386–10	22 – 11

PART NO. N° PIECES	REF. NO.
6DA–82388–00	21 – 20
6GR–82388–01	22 – 12
6GR–82389–00	22 – 15
6GR–82398–00	39 – 31
6GR–82421–00	17 – 16
6Y8–82509–10	49 – 8
6Y8–82521–11	49 – 15
6GR–82553–00	35 – 16
6GR–82563–00	28 – 28
6GR–8257G–00	10 – 18
6GR–82588–00	14 – 28
6GR–82589–00	24 – 18
6GR–82590–02	25 – 1
6GR–82599–00	26 – 8
6GR–8259M–00	25 – 10
6GR–825A8–00	17 – 15
6GR–8272F–01	22 – 3
6GR–8272G–01	22 – 6
6GR–8272U–00	24 – 26
68F–82846–00	24 – 11
6X4–83383–00	49 – 5
6X4–83386–00	49 – 6
6GR–83558–00	28 – 21
4P9–83591–00	21 – 26
6GR–83614–00	21 – 29
6AW–83651–01	12 – 12
6GR–8366B–00	13 – 14
68F–83688–10	11 – 7
6Y8–8454G–00	49 – 11
68F–85119–00	21 – 10
	24 – 21
68F–85516–01	24 – 19
6GR–85525–00	24 – 29
6GR–85544–00	24 – 8
689–85547–01	16 – 1
68V–85548–01	21 – 23
6GR–85561–01	20 – 4
60V–85564–00	21 – 8
6CE–85564–00	33 – 4
6GR–85586–01	20 – 7
6CJ–85780–01	3 – 46
6GR–85790–00	21 – 27
6GR–85887–00	35 – 13
6GR–85895–00	21 – 1
6GR–85896–00	22 – 20
6GR–8591A–05	21 – 3
6GR–8591B–00	21 – 5
6GR–86120–00	6 – 14

PART NO. N° PIECES	REF. NO.
6Y8–86260–03	49 – 2
6Y8–86260–12	49 – 2
6AA–86261–01	49 – 3
6AA–86261–22	49 – 3
6Y8–86267–00	49 – 1
6GR–8A411–00	17 – 14
K0F–A3741–00	8 – 5
K0F–A3742–00	8 – 6
K0F–A3743–00	8 – 3
6GR–W0001–01	50 – 1
6GR–W0001–22	51 – 1
6GR–W0005–00	18 – 27
6GR–W0078–01	1 – 17
	51 – 31
6GR–W009A–00–9S	5 – 1
6GR–W009C–00–9S	5 – 11
6GR–W1165–10	4 – 17
6GR–W436G–00–8D	35 – 4
6GR–W436G–00–CE	35 – 4
6GR–W4624–00	9 – 15
6KN–W8145–00	20 – 1
6GR–W85AA–01	24 – 1
6EK–W9010–00	20 – 2
90101–12067	34 – 32
90101–12068	34 – 32
90101–12069	34 – 32
90101–12070	34 – 32
90101–12072	34 – 32
90101–12073	34 – 32
	34 – 32
90101–12074	34 – 32
90105–06028	22 – 2
90105–06035	6 – 16
90105–06037	3 – 21
	3 – 23
	3 – 28
	3 – 30
	3 – 42
	9 – 14
90105–06151	12 – 7
90105–08175	3 – 8
	3 – 15
	5 – 29
	13 – 10
	18 – 24
	21 – 15
90105–08220	3 – 9
	5 – 28

PART NO. N° PIECES	REF. NO.
90105–08220	14 – 17
	14 – 20
90105–08266	13 – 12
90105–08268	14 – 5
90105–08M36	11 – 6
90105–10257	45 – 20
	48 – 20
90105–10446	4 – 9
90105–14012	36 – 14
90105–16004	36 – 21
90109–06286	3 – 36
90110–06038	6 – 18
90110–06191	35 – 35
90110–06425	45 – 13
	45 – 17
	48 – 13
	48 – 17
90110–08M05	38 – 46
90110–10053	45 – 5
	48 – 5
90110–10054	45 – 5
	48 – 5
90110–10055	45 – 5
	48 – 5
90111–06142	31 – 11
	31 – 16
90111–06144	28 – 25
	31 – 10
	31 – 15
	35 – 6
	35 – 8
90111–06175	29 – 20
	29 – 29
90111–06176	29 – 21
90111–08078	2 – 10
90116–08037	13 – 8
	18 – 25
90116–10066	45 – 1
	48 – 1
90116–10067	45 – 1
	48 – 1
90119–06299	15 – 24
90119–06309	16 – 31
90119–06MA6	10 – 11
90119–07234	5 – 9
	5 – 19
90119–07235	5 – 8
	5 – 18

PART NO. N° PIECES	REF. NO.
90119–08022	10 – 5
	10 – 10
90119–08175	33 – 2
90119–08176	35 – 3
90119–08187	28 – 4
90119–08196	43 – 39
	46 – 39
	51 – 40
90119–10009	40 – 21
	45 – 4
	48 – 4
90119–10024	36 – 18
	40 – 21
	45 – 1
	48 – 1
90119–10040	34 – 16
	39 – 23
	42 – 6
90119–10050	9 – 7
90119–10058	36 – 26
90119–10060	45 – 4
	48 – 4
90119–10064	34 – 15
90119–10074	42 – 4
90119–10075	39 – 24
90149–05044	35 – 22
90149–11001	5 – 27
90151–06069	3 – 32
90167–05017	29 – 15
90167–06M00	49 – 12
90169–05M00	28 – 12
90170–18009	44 – 9
	47 – 9
90170–35M34	43 – 48
	46 – 48
90171–18M04	45 – 24
	48 – 24
90173–06001	31 – 12
90179–08003	23 – 2
90179–08M34	13 – 9
	18 – 26
90179–14009	35 – 42
90183–02M03	44 – 22
	47 – 23
90185–06M07	33 – 15
	45 – 11
	45 – 15
	48 – 11

PART NO. N° PIECES	REF. NO.
90185–06M07	48 – 15
90201–02M00	44 – 21
	47 – 22
90201–06068	33 – 13
90201–06M30	49 – 13
90201–10048	33 – 10
90201–10081	33 – 23
90201–12060	34 – 33
90201–12064	33 – 5
90201–12426	34 – 34
90201–13M19	34 – 35
90201–156J2	30 – 13
90201–15M58	36 – 12
90201–16M55	36 – 11
90201–18029	37 – 15
90201–18030	36 – 23
90201–186F1	14 – 3
90201–19M01	45 – 23
	48 – 23
90201–253K0	47 – 13
90201–40008	44 – 30
90201–51014	36 – 2
90201–54008	44 – 13
90202–08M41	33 – 14
90202–32M19	36 – 10
90202–51001	36 – 5
90206–15M18	30 – 12
90214–35M07	43 – 47
	46 – 47
90240–05002	30 – 8
90249–06M19	34 – 25
90282–05008	44 – 37
	47 – 37
90338–05M03	20 – 15
90338–07012	29 – 30
90340–08003	45 – 6
	48 – 6
90340–18M09	14 – 2
90340–24001	3 – 3
90340–27001	3 – 12
90340–32011	39 – 2
90340–97002	5 – 5
	5 – 15
90344–51019	5 – 4
	5 – 14
90386–10M16	34 – 23
90386–12M61	33 – 22
90386–15M73	30 – 11

PART NO. N° PIECES	REF. NO.
90386–20002	34 – 29
90386–49001	36 – 4
90387–06119	20 – 18
	20 – 23
	22 – 23
	22 – 29
90387–06176	21 – 9
	24 – 20
90387–06289	16 – 30
90387–08104	33 – 3
90387–08M37	28 – 3
90387–08M45	2 – 13
90387–10094	2 – 11
90387–11005	5 – 26
90401–12002	9 – 9
90401–19001	12 – 4
90430–10004	21 – 28
90430–24239	3 – 4
90440–27001	40 – 13
90440–27002	40 – 13
90440–27003	40 – 13
90445–09047	14 – 25
90445–09048	7 – 4
90445–09104	14 – 22
90445–09304	7 – 14
90445–09M00	7 – 7
90445–16025	28 – 19
90445–23003	28 – 23
90450–14M05	26 – 4
90450–35003	39 – 29
90460–15227	28 – 30
90462–10033	35 – 11
90464–09013	25 – 5
90464–09028	14 – 27
90464–09129	22 – 27
90464–09M47	22 – 10
	25 – 2
90464–11121	16 – 12
90464–12009	16 – 45
	16 – 47
90464–12010	16 – 46
	25 – 6
90464–12012	25 – 4
90464–12015	14 – 31
	22 – 19
	39 – 34
90464–12183	10 – 16
	10 – 22

PART NO. N° PIECES	REF. NO.
90464–12183	20 – 11
	21 – 12
	35 – 39
90464–13249	10 – 17
	10 – 21
	14 – 30
	16 – 13
	21 – 22
	21 – 31
	22 – 17
	24 – 23
90464–16015	18 – 28
90464–18004	25 – 8
90464–18246	16 – 14
90464–19M45	39 – 33
90464–20181	3 – 45
	10 – 14
	10 – 15
	10 – 20
	21 – 19
	22 – 5
	22 – 8
	22 – 14
	22 – 18
90464–29223	18 – 11
90464–30001	24 – 22
90464–32002	21 – 11
90464–36005	35 – 46
90464–44002	25 – 13
90464–55002	35 – 18
90464–66001	42 – 35
90464–99004	10 – 4
90464–99006	28 – 27
90465–08M63	34 – 5
90465–11M10	7 – 10
	14 – 26
	16 – 10
	16 – 18
	16 – 25
	18 – 15
	28 – 22
	35 – 10
	35 – 10
	35 – 17
	37 – 51
	39 – 10
	41 – 2
	41 – 5

PART NO. N° PIECES	REF. NO.
90465–11M10	41 – 7
	41 – 10
	49 – 10
90465–11M59	7 – 11
	39 – 13
90465–13M24	7 – 15
	25 – 7
90465–13M60	16 – 42
90465–13M97	17 – 13
	17 – 18
	18 – 23
	26 – 12
90467–120A7	16 – 39
90467–140A9	16 – 32
	16 – 36
	16 – 43
90467–141A1	17 – 6
	18 – 10
90467–141A2	16 – 33
90467–150A5	7 – 3
90468–18008	33 – 16
	33 – 19
90468–180A0	33 – 18
90480–10M23	16 – 29
90480–12314	20 – 20
	20 – 25
	22 – 26
	22 – 32
	24 – 28
90480–13034	29 – 22
90480–14M17	31 – 2
	31 – 6
	31 – 14
90480–16015	29 – 18
	29 – 27
90480–20M05	28 – 17
	28 – 20
	42 – 24
90480–22M81	28 – 2
90501–10M77	44 – 23
	47 – 24
90501–200A2	42 – 23
90506–16010	34 – 26
91317–06014	4 – 6
91318–03005	38 – 40
91318–03025	38 – 39
91318–05030	38 – 38
91318–05045	38 – 45

PART NO. N° PIECES	REF. NO.
91380–04010	35 – 30
91380–05016	43 – 20
	46 – 20
91380–10020	34 – 8
91490–20015	33 – 8
91490–20025	35 – 44
91490–40030	45 – 25
	48 – 25
91690–30020	34 – 27
91690–40018	5 – 10
	5 – 20
91690–50014	10 – 6
91690–60022	34 – 28
91809–08006	5 – 7
	5 – 17
92990–06100	2 – 16
92990–08600	2 – 12
92990–10300	45 – 19
	48 – 19
92995–10600	45 – 2
	48 – 2
92995–14600	36 – 16
93101–30037	43 – 43
	46 – 43
	51 – 29
93101–37001	44 – 36
	47 – 36
	51 – 30
93102–26004	39 – 4
	51 – 7
93102–38008	9 – 10
	50 – 17
93102–85010	4 – 7
	50 – 16
93102–90004	4 – 3
	50 – 15
93106–14001	43 – 13
	46 – 13
	51 – 27
93109–26001	43 – 26
	46 – 26
	51 – 28
93210–04279	49 – 9
93210–04N51	38 – 30
93210–064A5	38 – 25
93210–06ME6	35 – 24
93210–07100	40 – 18
	40 – 18

PART NO. N° PIECES	REF. NO.
93210–07100	43 – 11
	46 – 11
	51 – 18
93210–09165	1 – 14
	37 – 49
	45 – 9
	48 – 9
	51 – 17
93210–10010	40 – 16
	40 – 16
	43 – 4
	46 – 4
	51 – 15
93210–11001	25 – 14
93210–11073	33 – 24
93210–12327	37 – 29
93210–13M63	3 – 40
	13 – 5
	14 – 9
	50 – 12
93210–17MF9	35 – 14
93210–18322	5 – 6
	5 – 16
93210–18397	37 – 16
93210–19123	1 – 13
	45 – 8
	48 – 8
	51 – 16
93210–19216	5 – 22
	50 – 2
93210–19MJ3	42 – 18
	51 – 5
93210–24M79	12 – 9
	50 – 21
93210–26003	14 – 18
93210–260A5	4 – 10
93210–26658	3 – 10
	50 – 8
93210–27370	23 – 8
93210–28646	6 – 8
	50 – 5
93210–32172	39 – 3
93210–34633	1 – 5
	42 – 13
	51 – 4
93210–37160	43 – 30
	46 – 30
	51 – 22

PART NO. N° PIECES	REF. NO.
93210–37160	51 – 36
93210–44006	37 – 13
	37 – 19
93210–49003	36 – 3
93210–49046	37 – 6
93210–64488	43 – 12
	46 – 12
	51 – 19
93210–66001	37 – 46
93210–89535	43 – 42
	46 – 42
	51 – 25
93210–90001	14 – 12
93210–97690	43 – 23
	46 – 23
	51 – 20
	51 – 32
93211–08001	43 – 29
	46 – 29
	51 – 21
	51 – 35
93211–10001	14 – 13
93211–26001	44 – 34
	47 – 34
	51 – 26
93306–01501	44 – 26
93311–675A1	44 – 2
	47 – 2
93311–737A2	44 – 35
	47 – 35
93311–944A0	44 – 1
	47 – 1
93332–00042	44 – 29
93332–000A0	44 – 11
93332–000B2	47 – 27
93340–69012	44 – 4
	47 – 4
93341–440U5	47 – 30
93390–00033	47 – 11
93399–99967	43 – 46
	46 – 46
93410–46099	36 – 7
93420–36M01	42 – 14
93440–25020	47 – 14
93440–52N50	37 – 36
93450–42110	37 – 23
93450–92171	44 – 3
	47 – 3

PART NO. N° PIECES	REF. NO.
93501–04011	44 – 24
	47 – 25
93501–08001	38 – 27
93505–32038	37 – 12
	38 – 22
93603–08072	38 – 14
93604–26256	38 – 37
93606–12019	3 – 5
	3 – 6
	3 – 14
	4 – 2
	13 – 13
	14 – 6
	14 – 21
	40 – 4
	40 – 9
	42 – 7
	42 – 11
	43 – 37
	46 – 37
	51 – 39
93606–16117	44 – 7
	47 – 7
93608–12M05	43 – 38
	46 – 38
93608–16M16	13 – 11
	39 – 25
93700–06002	34 – 18
94581–99044	9 – 11
94702–00442	1 – 16
	5 – 30
95022–06035	20 – 5
95380–06600	2 – 15
95380–10600	45 – 3
	48 – 3
95380–10700	33 – 9
95380–12600	34 – 36
95380–14800	36 – 15
95780–06300	49 – 14
95780–06500	24 – 16
95780–08300	2 – 14
95780–10300	34 – 31
95817–06075	12 – 2
95D95–06012	10 – 19
	16 – 28
	20 – 13
	26 – 14
	29 – 6

PART NO. N° PIECES	REF. NO.
95D95–06012	29 – 13
	30 – 6
	34 – 6
	34 – 20
	35 – 12
	35 – 20
	35 – 38
	35 – 41
	39 – 32
95D95–06014	18 – 19
95D95–06016	14 – 29
	16 – 15
	16 – 21
	16 – 49
	20 – 10
	21 – 6
	21 – 18
	21 – 21
	21 – 30
	22 – 4
	22 – 7
	22 – 13
	22 – 16
	24 – 15
	24 – 27
	24 – 30
	26 – 11
	39 – 18
	42 – 19
95D95–06020	6 – 21
	21 – 4
	28 – 7
	31 – 4
	31 – 8
	39 – 21
	39 – 27
	42 – 31
95D95–06025	6 – 9
	10 – 2
	20 – 17
	20 – 22
	22 – 25
	22 – 31
	23 – 9
	42 – 25
95D95–06030	6 – 5
	6 – 13
	20 – 6

PART NO. N° PIECES	REF. NO.
95D95–06030	40 – 2
95D95–06040	42 – 26
95D95–08012	30 – 16
95D95–08016	23 – 6
	23 – 16
	23 – 20
95D95–08020	23 – 5
	24 – 25
97095–05010	43 – 19
	46 – 19
97513–08545	23 – 1
97580–08535	35 – 28
97595–05516	35 – 15
97602–04310	38 – 8
97607–04208	6 – 3
	6 – 11
97780–50620	29 – 4
	29 – 11
97780–60620	21 – 25
	49 – 7
97880–06035	49 – 12
97980–06216	49 – 4
97985–05210	2 – 4
97D95–06012	39 – 6
	41 – 13
	42 – 33
97D95–06018	35 – 33
97E75–08535	33 – 7
97E75–10570	39 – 22
	40 – 3
	40 – 8
	42 – 5
	42 – 9
97E75–10580	42 – 10
97E95–06510	34 – 12
	36 – 28
97E95–06516	17 – 19
	20 – 8
	25 – 9
97E95–06520	21 – 2
	22 – 21
97E95–06530	34 – 4
97E95–06540	33 – 21
97E95–08520	43 – 44
	46 – 44
97E95–08525	41 – 11
97E95–08535	18 – 16
	43 – 14

PART NO. N° PIECES	REF. NO.
97E95–08535	46 – 14
98780–05025	5 – 24
98980–05025	3 – 39
	13 – 7
	14 – 11
99002–03600	38 – 19
99002–12600	43 – 16
	46 – 16
99009–55500	44 – 32
	47 – 32
99009–62500	44 – 12
	47 – 12
99480–08030	40 – 20
	40 – 20
	43 – 6
	46 – 6