YAMAHA

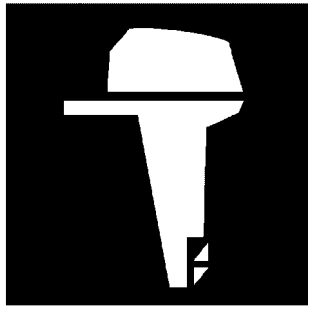

PARTS CATALOGUE

XF425

YAMAHA
GENUINE
Parts & Accessories

1S6GR-100EA

( )

XF425
PARTS CATALOGUE
©2024 by Yamaha Motor Co., Ltd.
1st edition, July 2024
All rights reserved.
Any reprinting or unauthorized use
without the written permission of
Yamaha Motor Co., Ltd.
is expressly prohibited.
Printed in Japan.

FOREWORD

This Parts Catalogue is related to the parts for the model(s) on the cover page. When you are ordering replacement parts, please refer to this Parts Catalogue and quote both part numbers and part names correctly.

1. Modifications or additions which have been made after the issue of the Parts Catalogue will be announced in the Parts News.
   It is advisable that you make the necessary corrections to the Parts Catalogue according to the Parts News.

2. Abbreviations
   The following abbreviations are used in this Parts Catalogue.
   "UR" Use specified parts number.
   "UN" Use as many as needed.
   "AP" Alternate Parts
   "LM" Locally Made (Parts need to be ordered locally)
   "F#" Frame No. (Applicable machine No.)
   "O/S" Over Size

3. The number of components for assembly
   - Parts, which are to be supplied in an assembly, are listed with a dot (.) in front of the part name as shown below.
   - The numeral appearing to the right of each component part indicates the quantity of parts for each assembly unit.

PART NO.	DESCRIPTION	Q'TY	REMARKS
2F5–83310–60	FRONT FLASHER LIGHT ASSY	2	
115–83311–60	.BULB (6V–18W)	1	

4. Applicable colours of graphics are represented in the "REMARKS" as shown below.

PART NO.	DESCRIPTION	Q'TY	REMARKS
2N4–24110–00–X5	FUEL TANK COMP.	2	MXR
3J1–24240–10	.GRAPHIC, FUEL TANK	1	FOR MXR

5. Note that the illustrations for reference in finding parts numbers are not to be used for assembling. When assembling, please use the applicable service manual.

6. The asterisk (*) before a reference number indicates modified items after the first edition.

7. Applicable Serial No.
   Engine Serial No.

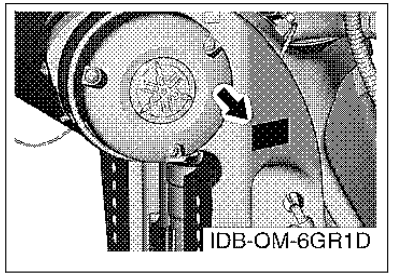

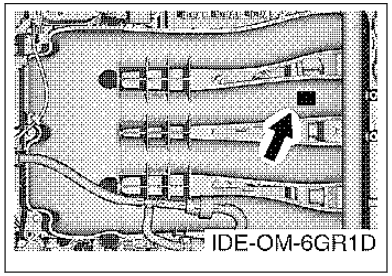

8. Applicable Engine Starting Serial No.

Model	Serial No.	Model	Serial No.
XF425	6GR-1000001		

9. Applicable Colour Code

Abbreviation	Colour Name	Colour Code
DBN1	DARK BLUISH GRAY 1	008D

10. Quantity Column Information

Column No.	Name Of Q'ty Column	Applicable Model
1	NSA	XF425NSA
2	NSA2	XF425NSA2
3	NSA7	XF425NSA7

CONTENTS

SCHEDULED SERVICE PARTS....1
TOP COWLING 1....2
TOP COWLING 2....3
CYLINDER & CRANKCASE 1....4
CRANKSHAFT & PISTON....6
CYLINDER & CRANKCASE 2....8
CYLINDER & CRANKCASE 3....10
CYLINDER & CRANKCASE 4....11
VALVE 1....12
VALVE 2....14
INTAKE....15
THROTTLE BODY ASSY....16
OIL PUMP....17
EXHAUST 1....18
EXHAUST 2....19
VAPOR SEPARATOR....21
FUEL 1....22
FUEL 2....24
FUEL 3....25
FUEL 4....27
GENERATOR....28
ELECTRICAL 1....30
ELECTRICAL 2....32
ELECTRICAL 3....34
ELECTRICAL 4....35
ELECTRICAL 5....37
ELECTRICAL 6....38
STARTING MOTOR....39
BOTTOM COWLING 1....40
BOTTOM COWLING 2....42
BOTTOM COWLING 3....44
BOTTOM COWLING 4....45
GRAPHIC & TOOL....46
CONTROL....47
BRACKET 1....48
BRACKET 2....50
BRACKET 3....52
POWER TRIM & TILT ASSY 1....54
POWER TRIM & TILT ASSY 2....56
UPPER CASING 1....58
UPPER CASING 2....60
UPPER CASING 3....62
OIL PAN....63
LOWER CASING & DRIVE 1....65
LOWER CASING & DRIVE 2....68
LOWER CASING & DRIVE 3....71
LOWER CASING & DRIVE 4....73
LOWER CASING & DRIVE 5....76
LOWER CASING & DRIVE 6....79
OPTIONAL PARTS....81
REPAIR KIT 1....82
REPAIR KIT 2....83

INDEX

NUMERICAL INDEX....85

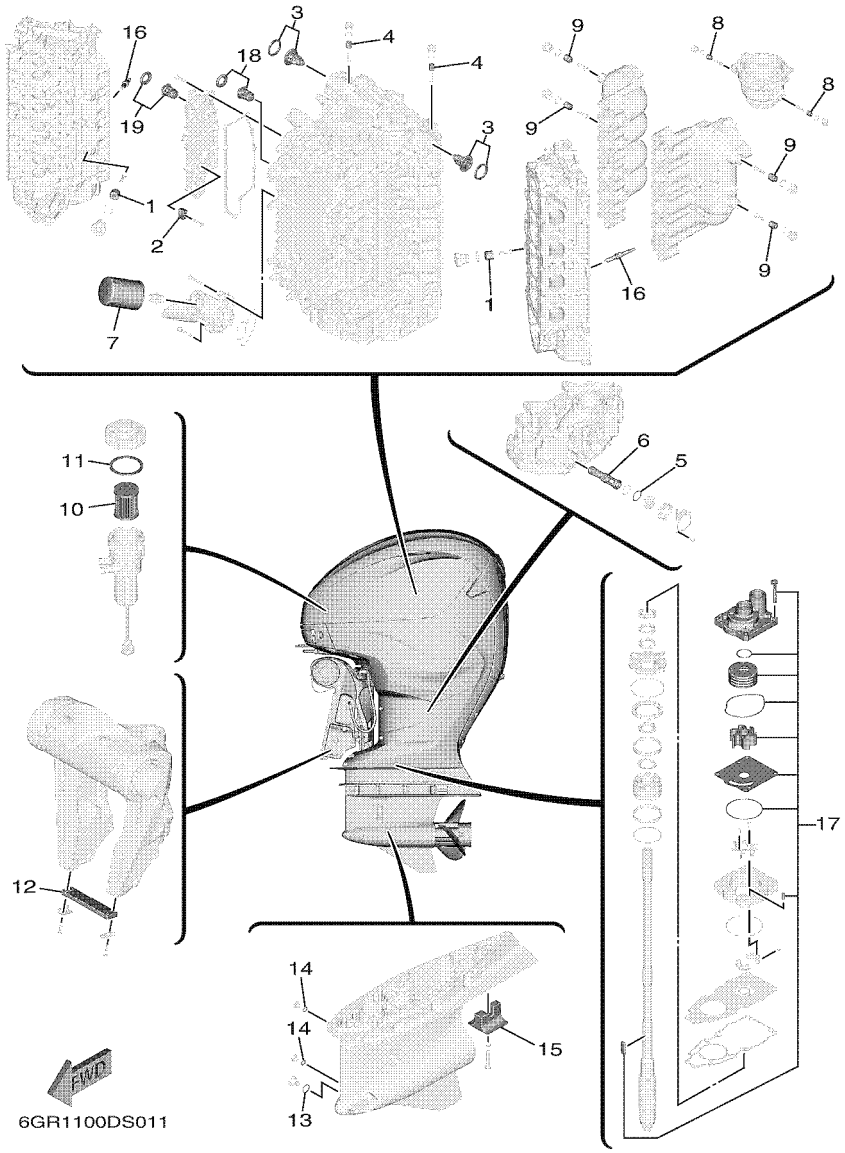

FIG. 1 SCHEDULED SERVICE PARTS

REF. NO.	PART NO.	DESCRIPTION	NSA	NSA2	NSA7			REMARKS
1	6AW–1132L–00	ANODE 2	6	6	6			
2	6AW–1132P–00	ANODE 5	3	3	3			
3	6GR–12411–00	THERMOSTAT	2	2	2			
4	6G8–11325–00	ANODE	2	2	2			
5	93210–34633	O-RING	1	1	1			
6	6GR–13411–00	STRAINER, OIL	1	1	1			
7	N26–13440–02	ELEMENT ASSY, OIL CLEANER	1	1	1			
8	6G8–11325–00	ANODE	2	2	2			
9	6G8–11325–00	ANODE	4	4	4			
10	6P3–24563–01	ELEMENT, FILTER	1	1	1			
11	6P3–24564–00	GASKET	1	1	1			
12	6AW–45251–00	ANODE	1	1	1			
13	93210–19123	O-RING	1	1	1			
14	93210–09165	O-RING	2	2	2			
15	6AW–45373–00	ANODE	1	1	1			
16	94702–00442	PLUG, SPARK (NGK ILMAR7E9)	8	8	8			
17	6GR–W0078–00	WATER PUMP REPAIR KIT	1	1	1			
18	6H3–12411–20	THERMOSTAT	1	1	1			
19	66M–12411–01	THERMOSTAT	1	1	1			

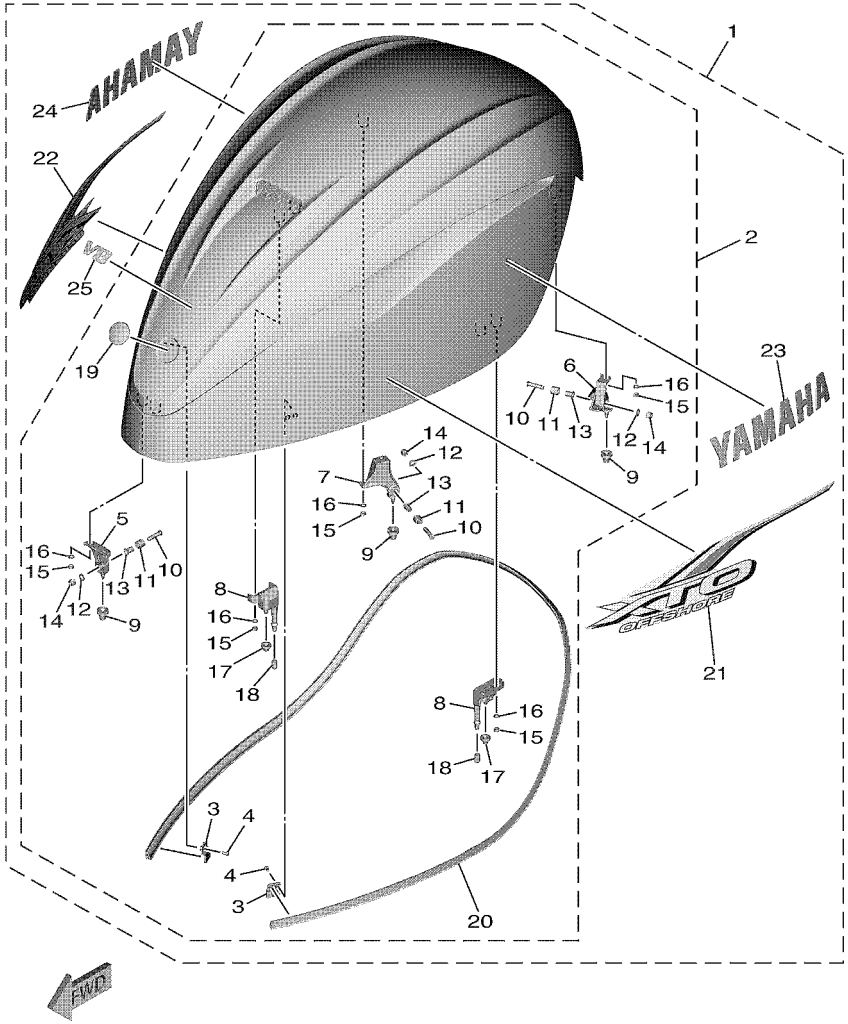

6GR1100DS020

FIG. 2 TOP COWLING 1

REF. NO.	PART NO.	DESCRIPTION	NSA	NSA2	NSA7			REMARKS
1	6GR–42610–00–8D	TOP COWLING ASSY	1					GRAY
	6GR–42610–00–CE	TOP COWLING ASSY		1				WHITE
2	6GR–4261A–00–8D	.TOP COWLING W/O GRAPHICS	1					GRAY
	6GR–4261A–00–CE	.TOP COWLING W/O GRAPHICS		1				WHITE
3	6GR–42477–00	..PLATE, LOCK	2	2				
4	97985–05210	..SCREW, WITH WASHER	4	4				
5	6GR–42647–00	..HOLDER, CLAMP BAND	1	1				
6	6GR–42648–00	..HOLDER, CLAMP BAND	1	1				
7	6GR–42649–00	..HOLDER, CLAMP BAND	1	1				
8	6GR–42643–00	..PLATE, CLAMP	2	2				
9	6AW–42663–00	..DAMPER 2	3	3				
10	90111–08078	..BOLT,HEX. SOCKET BUTTON	3	3				
11	90387–10094	..COLLAR	3	3				
12	92990–08600	..WASHER, PLATE	3	3				
13	90387–08M45	..COLLAR	3	3				
14	95780–08300	..NUT, FLANGE	3	3				
15	95380–06600	..NUT, HEXAGON	10	10				
16	92990–06100	..WASHER, SPRING	10	10				
17	663–42662–00	..DAMPER	2	2				
18	67F–13448–00	..CAP	2	2				
19	F2S–6411H–00	..EMBLEM, TUNING FORK	1	1				
20	6GR–42629–00	..SEAL	1	1				
21	6GR–42675–00	.GRAPHIC, SIDE 1	1	1				
22	6GR–42676–00	.GRAPHIC, SIDE 2	1	1				
23	6GR–2153A–00	.EMBLEM, YAMAHA	1	1				
24	6GR–2153B–00	.EMBLEM, YAMAHA	1	1				
25	6GR–42677–00	.GRAPHIC, FRONT	1	1				

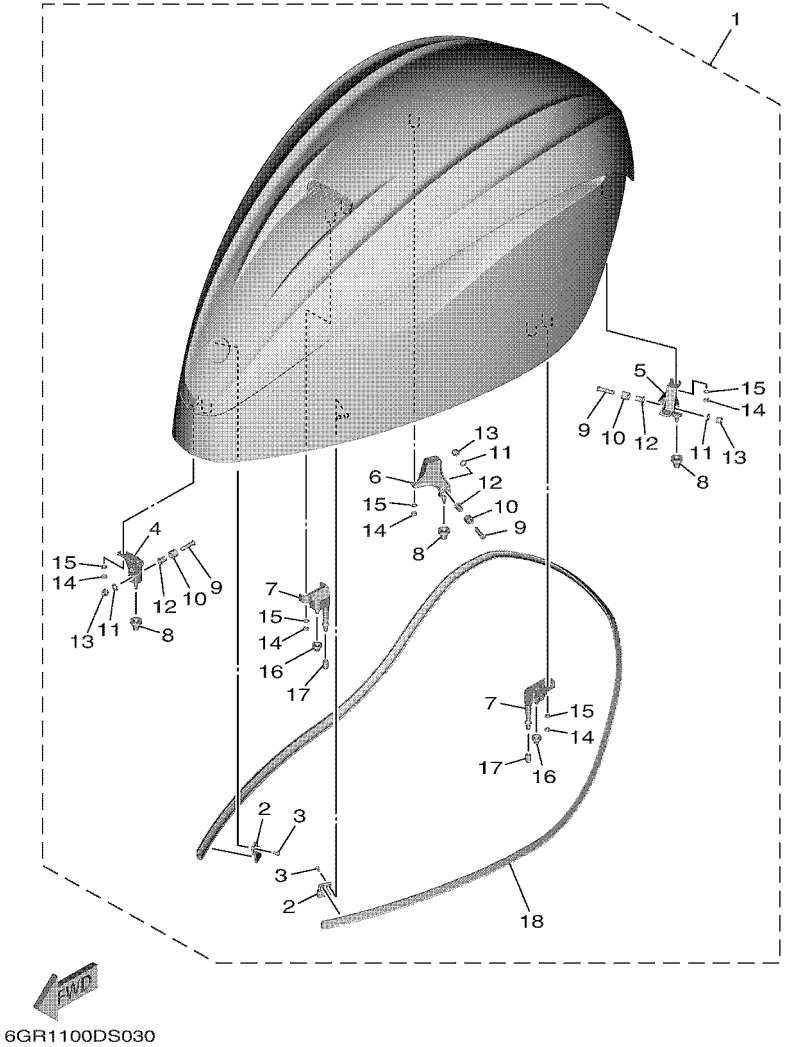

FIG. 3 TOP COWLING 2

REF. NO.	PART NO.	DESCRIPTION	NSA	NSA2	NSA7			REMARKS
1	6GR–42610–10	TOP COWLING ASSY			1			
2	6GR–42477–00	.PLATE, LOCK			2			
3	97985–05210	.SCREW, WITH WASHER			4			
4	6GR–42647–00	.HOLDER, CLAMP BAND			1			
5	6GR–42648–00	.HOLDER, CLAMP BAND			1			
6	6GR–42649–00	.HOLDER, CLAMP BAND			1			
7	6GR–42643–00	.PLATE, CLAMP			2			
8	6AW–42663–00	.DAMPER 2			3			
9	90111–08078	.BOLT,HEX. SOCKET BUTTON			3			
10	90387–10094	.COLLAR			3			
11	92990–08600	.WASHER, PLATE			3			
12	90387–08M45	.COLLAR			3			
13	95780–08300	.NUT, FLANGE			3			
14	95380–06600	.NUT, HEXAGON			10			
15	92990–06100	.WASHER, SPRING			10			
16	663–42662–00	.DAMPER			2			
17	67F–13448–00	.CAP			2			
18	6GR–42629–00	.SEAL			1			

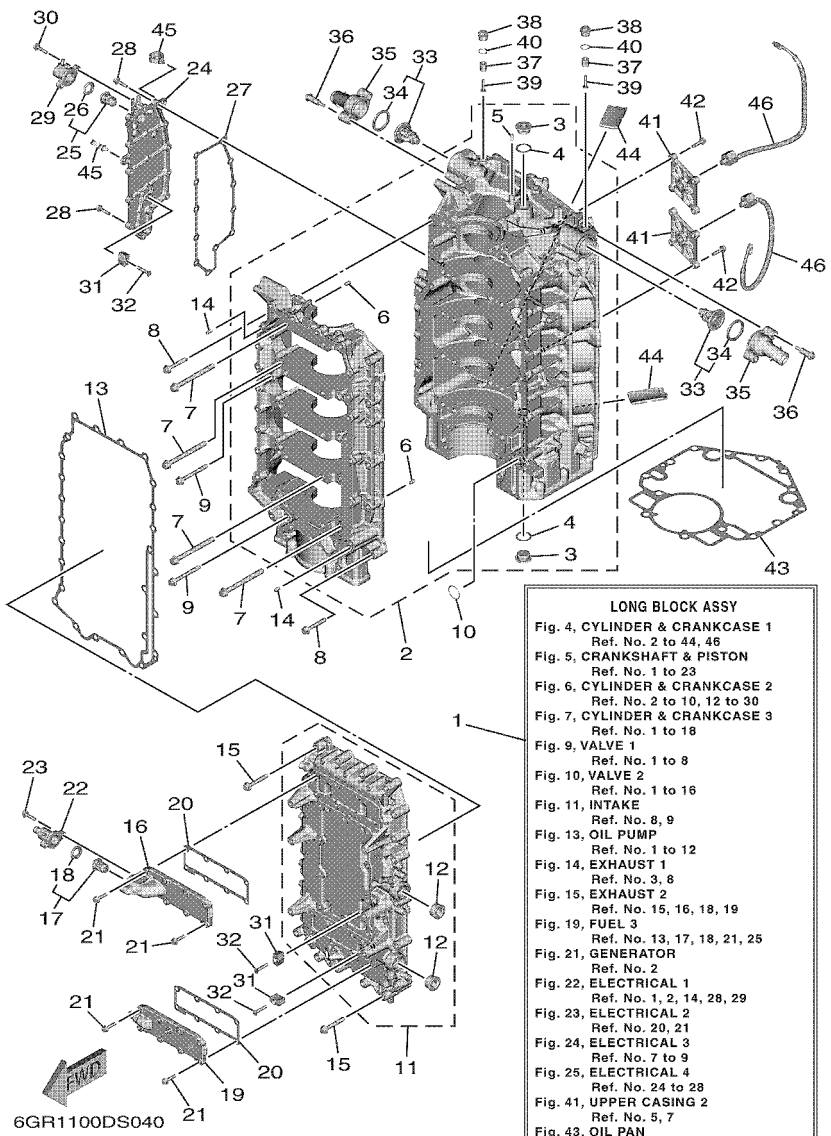

FIG. 4 CYLINDER & CRANKCASE 1

REF. NO.	PART NO.	DESCRIPTION	NSA	NSA2	NSA7			REMARKS
1	6GR–11000–00	LONG BLOCK ASSY	1	1	1			
2	6GR–15109–00–9S	CRANKCASE ASSY	1	1	1			
3	90340–24001	.PLUG, STRAIGHT SCREW	2	2	2			
4	90430–24239	.GASKET	2	2	2			
5	93606–12019	.PIN, DOWEL	1	1	1			
6	93606–12019	.PIN, DOWEL	10	10	10			
7	6P2–15187–00	BOLT	20	20	20			
8	90105–08175	BOLT, FLANGE	10	10	10			
9	90105–08220	BOLT, FLANGE	6	6	6			
10	93210–26658	O-RING	1	1	1			
11	6GR–15411–00–9S	COVER, CRANKCASE 1	1	1	1			
12	90340–27001	.PLUG, STRAIGHT SCREW	2	2	2			
13	6GR–15451–00	GASKET, CRANKCASE COVER 1	1	1	1			
14	93606–12019	PIN, DOWEL	2	2	2			
15	90105–08175	BOLT, FLANGE	26	26	26			
16	6GR–15414–00–9S	COVER 1	1	1	1			
17	6H3–12411–20	THERMOSTAT	1	1	1			
18	6H3–12412–10	.SEAL, THERMOSTAT	1	1	1			
19	6GR–15423–00–9S	COVER 2	1	1	1			
20	6GR–1131B–00	GASKET, COVER	2	2	2			
21	90105–06037	BOLT, FLANGE	16	16	16			
22	6GR–12417–00–9S	HOUSING, THERMOSTAT	1	1	1			
23	90105–06037	BOLT, FLANGE	2	2	2			
24	6GR–15413–00–9S	COVER	1	1	1			
25	66M–12411–01	THERMOSTAT	1	1	1			
26	688–12412–00	.SEAL, THERMOSTAT	1	1	1			
27	6GR–15353–00	GASKET, DRAIN	1	1	1			

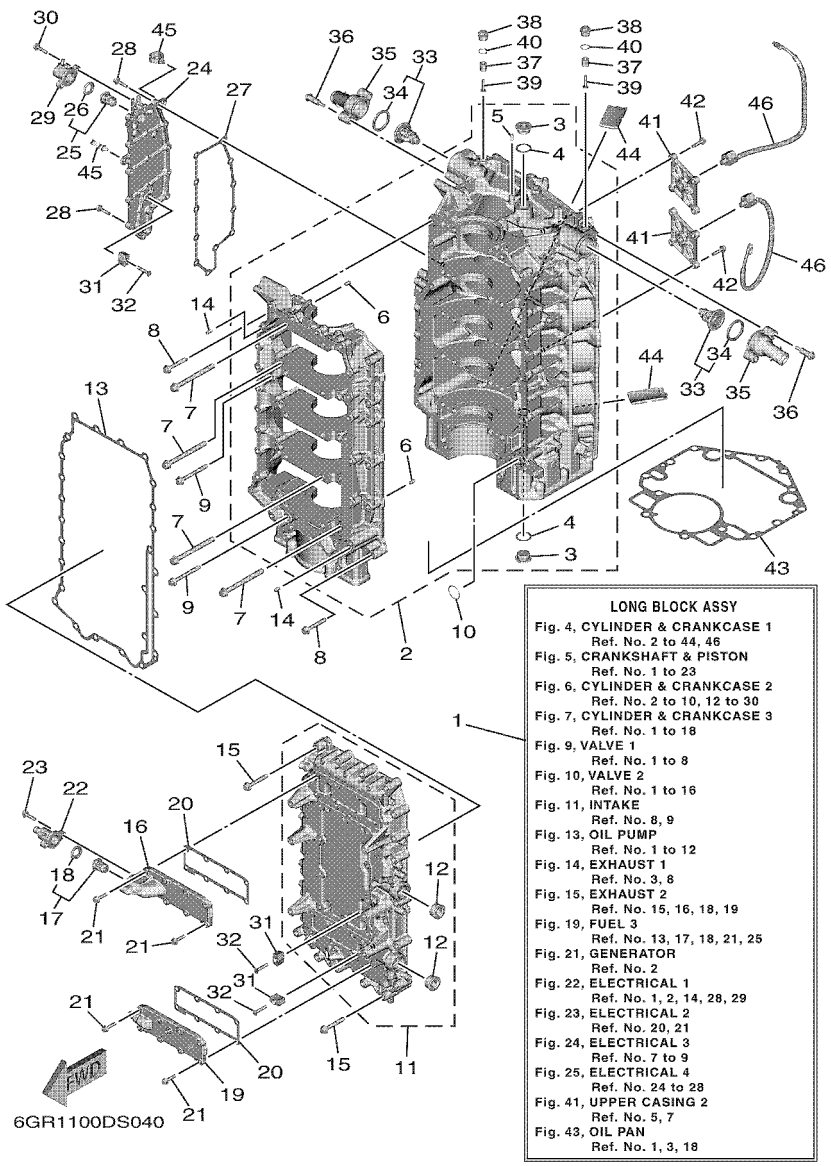

FIG. 4 CYLINDER & CRANKCASE 1

REF. NO.	PART NO.	DESCRIPTION	NSA	NSA2	NSA7			REMARKS
28	90105–06037	BOLT, FLANGE	12	12	12			
29	6GR–1241B–00–9S	COVER, THERMOSTAT 2	1	1	1			
30	90105–06037	BOLT, FLANGE	2	2	2			
31	6AW–1132P–00	ANODE 5	3	3	3			
32	90151–06069	SCREW, COUNTERSUNK	3	3	3			
33	6GR–12411–00	THERMOSTAT	2	2	2			
34	6GR–12412–00	.SEAL, THERMOSTAT	1	1	1			
35	6GR–12413–00	COVER, THERMOSTAT	2	2	2			
36	90109–06286	BOLT	4	4	4			
37	6G8–11325–00	ANODE	2	2	2			
38	6G8–11197–A0	PLUG, BLIND	2	2	2			
39	98980–05025	SCREW, BIND	2	2	2			
40	93210–13M63	O-RING	2	2	2			
41	6GR–1135A–00	BRACKET	2	2	2			
42	90105–06037	BOLT, FLANGE	8	8	8			
43	6GR–11351–00	GASKET, CYLINDER	1	1	1			
44	6GR–14664–00	GROMMET, WATER SHUT	2	2	2			
45	90464–20181	CLAMP	2	2	2			
46	6CJ–85780–00	SENSOR, KNOCK	2	2	2			

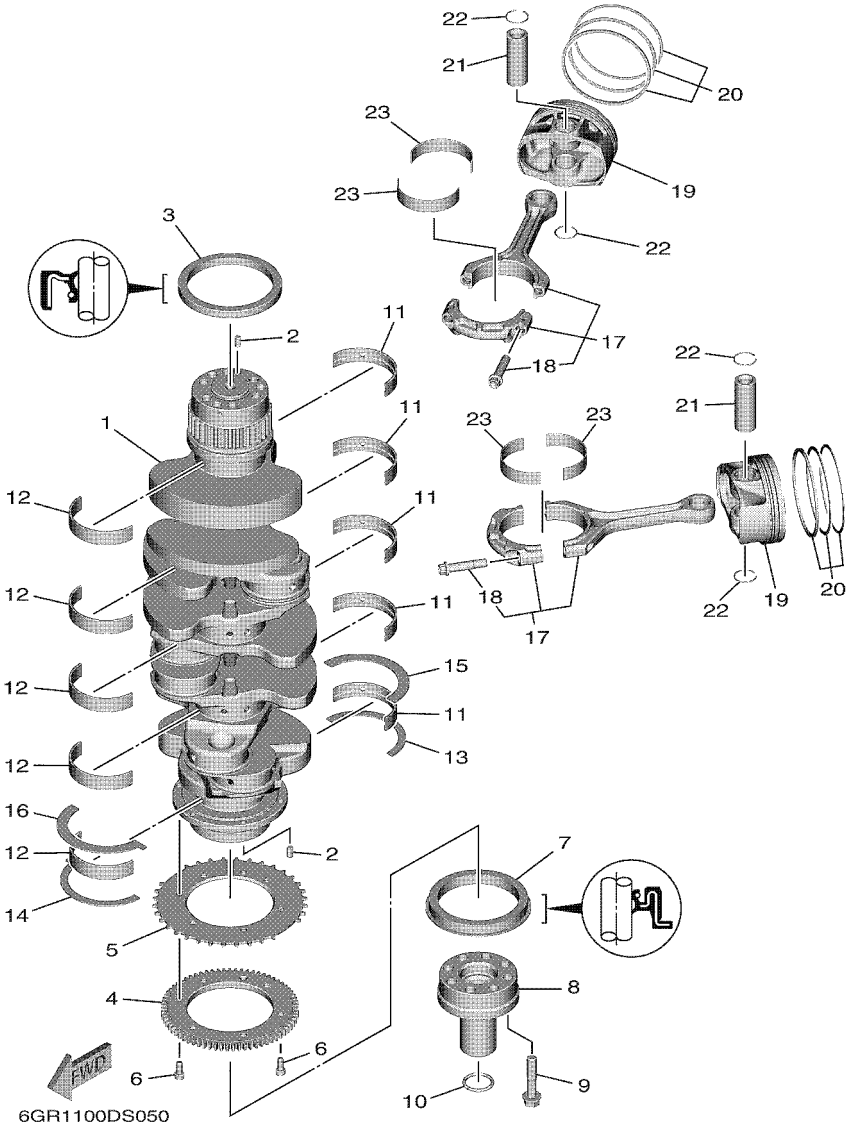

FIG. 5 CRANKSHAFT & PISTON

REF. NO.	PART NO.	DESCRIPTION	NSA	NSA2	NSA7			REMARKS
1	6GR–11411–00	CRANKSHAFT	1	1	1			
2	93606–12019	PIN, DOWEL	2	2	2			
3	93102–90004	OIL SEAL	1	1	1			
4	6GR–13188–00	GEAR, DRIVE	1	1	1			
5	6GR–81673–00	ROTOR	1	1	1			
6	91317–06014	BOLT,HEX.SOCKET HEAD	6	6	6			
7	93102–85010	OIL SEAL	1	1	1			
8	6GR–12199–00	FLANGE	1	1	1			
9	90105–10446	BOLT, FLANGE	8	8	8			
10	93210–260A5	O-RING	1	1	1			
11	6GR–11416–00	PLANE BEARING, CRANKSHAFT 1	5	5	5			UR BLACK
	6GR–11416–10	PLANE BEARING, CRANKSHAFT 1	5	5	5			UR BLUE
	6GR–11416–20	PLANE BEARING, CRANKSHAFT 1	5	5	5			UR PINK
	6GR–11416–30	PLANE BEARING, CRANKSHAFT 1	5	5	5			UR WHITE
12	6GR–11417–00	PLANE BEARING, CRANKSHAFT 2	5	5	5			UR BLACK
	6GR–11417–10	PLANE BEARING, CRANKSHAFT 2	5	5	5			UR BLUE
	6GR–11417–20	PLANE BEARING, CRANKSHAFT 2	5	5	5			UR PINK
	6GR–11417–30	PLANE BEARING, CRANKSHAFT 2	5	5	5			UR WHITE
13	6CB–11426–03	BEARING, THRUST 1	1	1	1			
14	6CB–11427–03	BEARING, THRUST 2	1	1	1			
15	6GR–11426–00	BEARING, THRUST 1	1	1	1			
16	6GR–11427–00	BEARING, THRUST 2	1	1	1			
17	6GR–W1165–00	CONNECTING ROD ASSY	8	8	8			
18	63P–11654–10	.BOLT, CONNECTING ROD	2	2	2			
19	6GR–11631–00	PISTON (STD)	8	8	8			
20	6GR–11603–00	PISTON RING SET (STD)	8	8	8			
21	6GR–11633–00	PIN, PISTON	8	8	8			

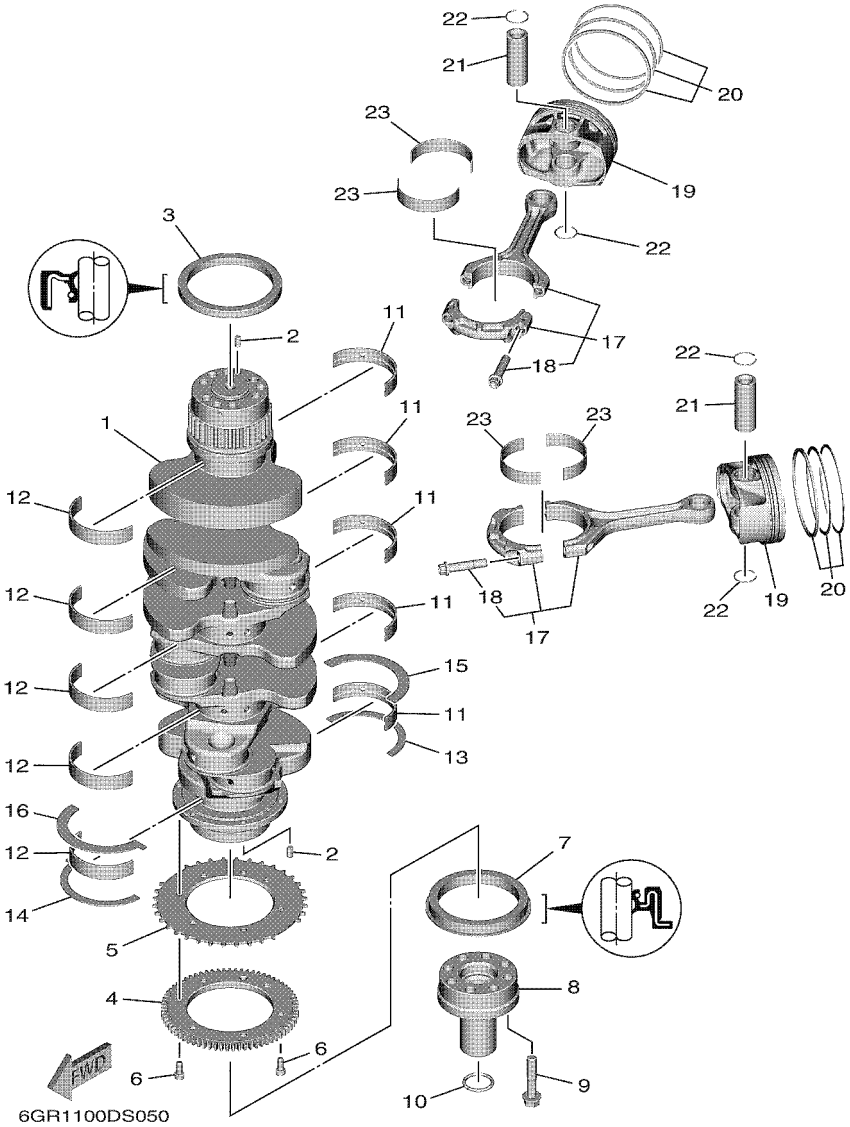

FIG. 5 CRANKSHAFT & PISTON

REF. NO.	PART NO.	DESCRIPTION	NSA	NSA2	NSA7			REMARKS
22	6GR–11634–00	CLIP, PISTON PIN	16	16	16			
23	6GR–11656–00	PLANE BEARING, CONNECTING ROD	16	16	16			UR YELLOW
	6GR–11656–10	PLANE BEARING, CONNECTING ROD	16	16	16			UR GREEN
	6GR–11656–20	PLANE BEARING, CONNECTING ROD	16	16	16			UR BLUE

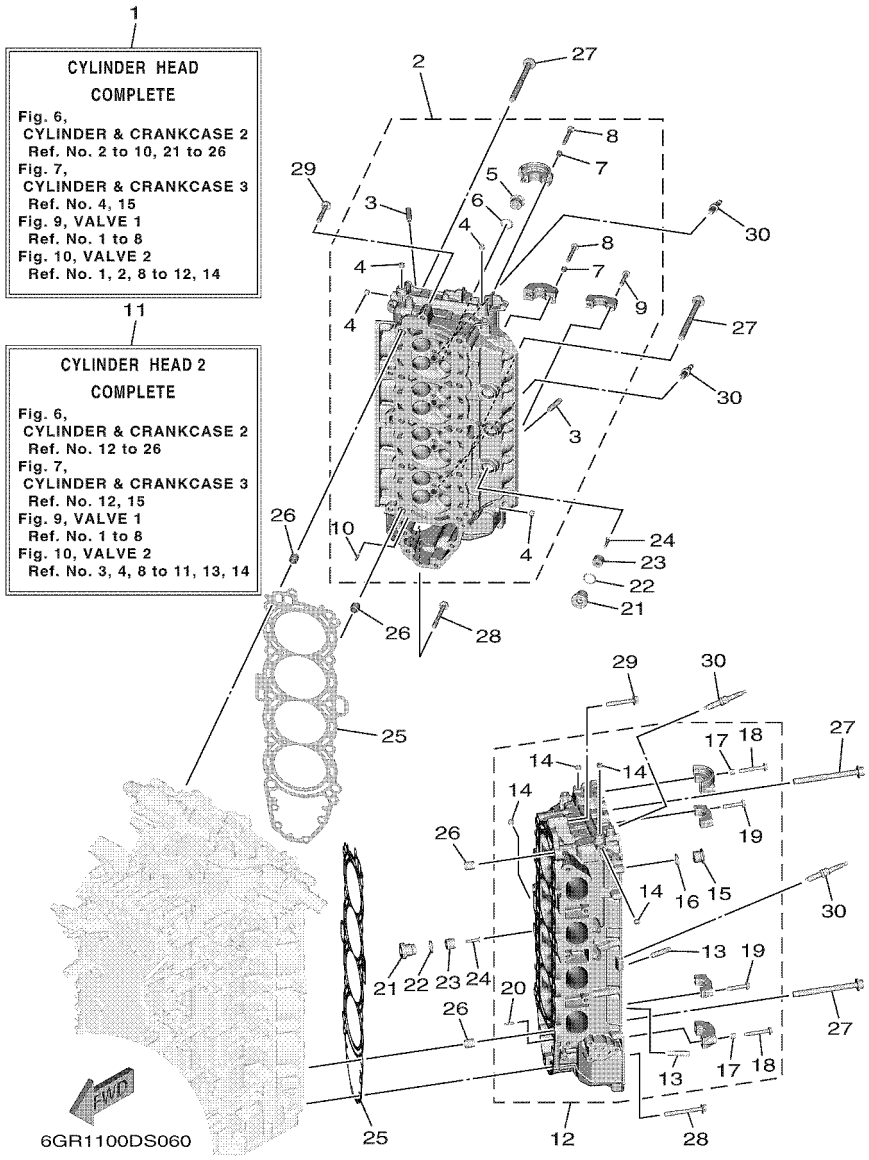

FIG. 6 CYLINDER & CRANKCASE 2

REF. NO.	PART NO.	DESCRIPTION	NSA	NSA2	NSA7			REMARKS
1	6GR–W009A–00–9S	CYLINDER HEAD COMPLETE	1	1	1			
2	6GR–11110–00	CYLINDER HEAD ASSY	1	1	1			
3	6DA–11133–10	.GUIDE, VALVE 1	16	16	16			
4	90344–51019	.PLUG, TAPER SCREW	4	4	4			
5	90340–97002	.PLUG, STRAIGHT SCREW	3	3	3			
6	93210–18322	.O-RING	3	3	3			
7	91809–08006	.PIN, DOWEL	4	4	4			
8	90119–07235	.BOLT/WASHER-CAM CAPS	4	4	4			
9	90119–07234	.BOLT, WITH WASHER	18	18	18			
10	91690–40018	.PIN, SPRING	1	1	1			
11	6GR–W009C–00–9S	CYLINDER HEAD 2 COMPLETE	1	1	1			
12	6GR–11120–00	CYLINDER HEAD ASSY 2	1	1	1			
13	6DA–11133–10	.GUIDE, VALVE 1	16	16	16			
14	90344–51019	.PLUG, TAPER SCREW	4	4	4			
15	90340–97002	.PLUG, STRAIGHT SCREW	3	3	3			
16	93210–18322	.O-RING	3	3	3			
17	91809–08006	.PIN, DOWEL	4	4	4			
18	90119–07235	.BOLT/WASHER-CAM CAPS	4	4	4			
19	90119–07234	.BOLT, WITH WASHER	18	18	18			
20	91690–40018	.PIN, SPRING	1	1	1			
21	6GR–11197–00	PLUG, BLIND	6	6	6			
22	93210–19216	O-RING	6	6	6			
23	6AW–1132L–00	ANODE 2	6	6	6			
24	98780–05025	SCREW, FLAT HEAD	6	6	6			
25	6GR–11181–00	GASKET, CYLINDER HEAD 1	2	2	2			
26	90387–11005	COLLAR	4	4	4			
27	90149–11001	SCREW	20	20	20			

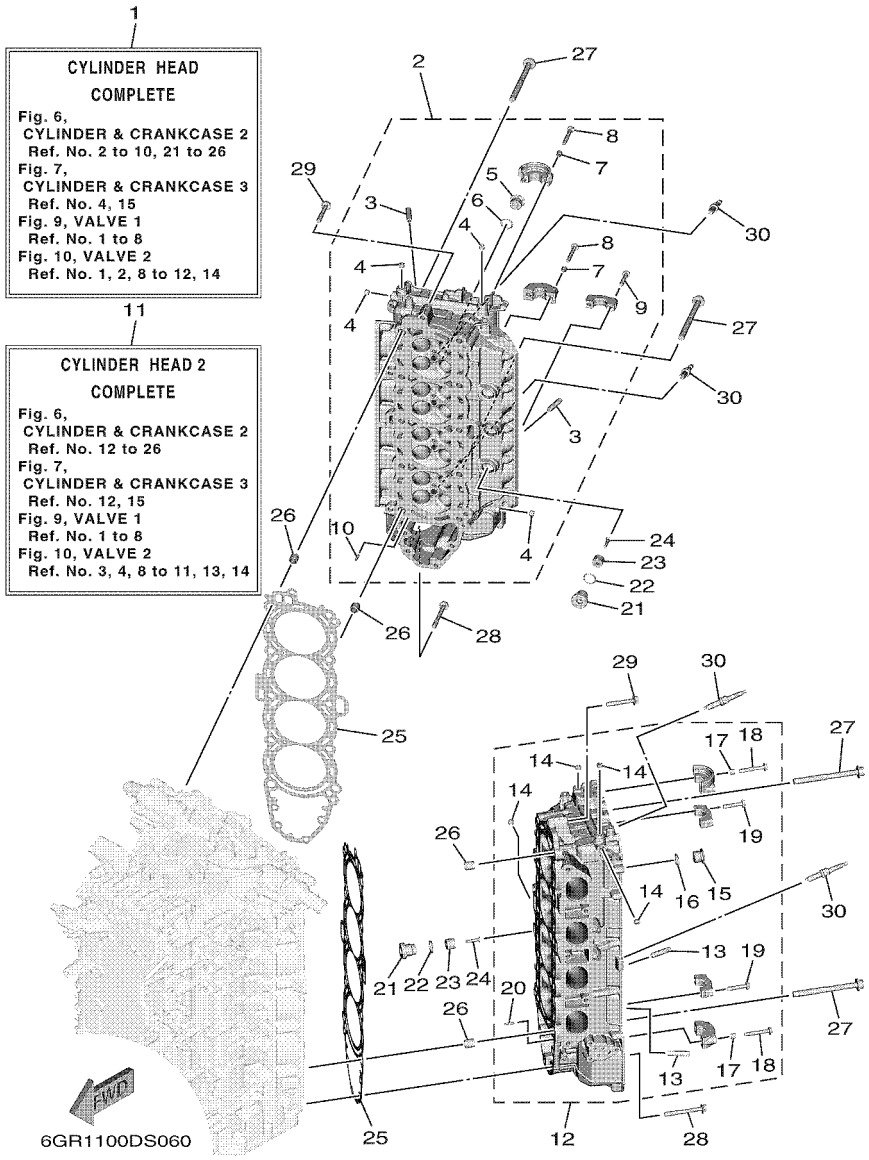

FIG. 6 CYLINDER & CRANKCASE 2

REF. NO.	PART NO.	DESCRIPTION	NSA	NSA2	NSA7			REMARKS
28	90105–08220	BOLT, FLANGE	8	8	8			
29	90105–08175	BOLT, FLANGE	2	2	2			
30	94702–00442	PLUG, SPARK (NGK ILMAR7E9)	8	8	8			

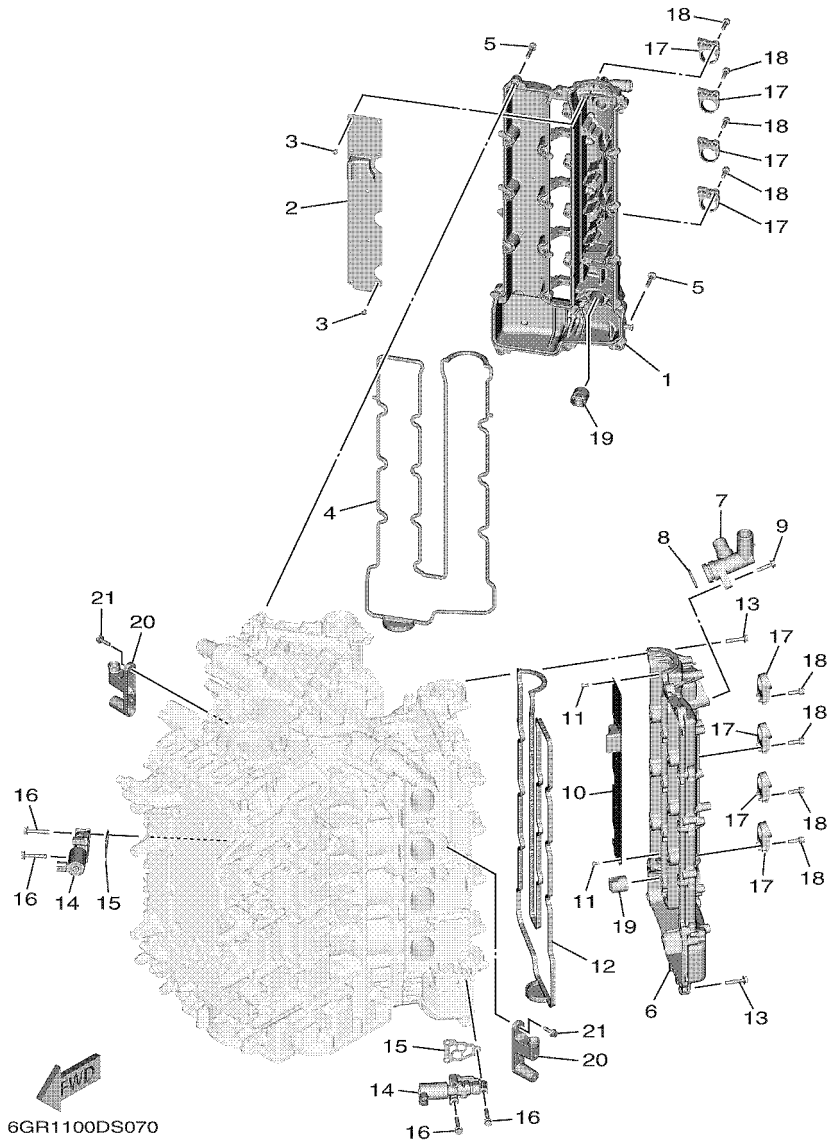

FIG. 7 CYLINDER & CRANKCASE 3

REF. NO.	PART NO.	DESCRIPTION	NSA	NSA2	NSA7			REMARKS
1	6GR–11191–00–9S	COVER, CYLINDER HEAD 1	1	1	1			
2	6GR–11135–00	PLATE, BREATHER 3	1	1	1			
3	97607–04208	SCREW, WITH WASHER	8	8	8			
4	6GR–11193–00	GASKET, HEAD COVER 1	1	1	1			
5	95895–06030	BOLT, FLANGE	22	22	22			
6	6GR–11192–00–9S	COVER, CYLINDER HEAD 2	1	1	1			
7	6GR–11372–00	NIPPLE, HOSE	1	1	1			
8	93210–28646	O-RING	1	1	1			
9	95895–06025	BOLT, FLANGE	1	1	1			
10	6GR–11136–00	PLATE, BREATHER 4	1	1	1			
11	97607–04208	SCREW, WITH WASHER	8	8	8			
12	6GR–11194–00	GASKET, HEAD COVER 2	1	1	1			
13	95895–06030	BOLT, FLANGE	22	22	22			
14	6GR–86120–00	SOLENOID VALVE ASSY	2	2	2			
15	6CB–1242F–00	GASKET, FILTER	2	2	2			
16	90105–06035	BOLT, FLANGE	6	6	6			
17	6GR–82316–00	BRACKET, IGNITION COIL	8	8	8			
18	90110–06038	BOLT, HEXAGON SOCKET HEAD	16	16	16			
19	6GR–11927–00	LIFTER	2	2	2			
20	6GR–42743–00	BRACKET	2	2	2			
21	95895–06020	BOLT, FLANGE	4	4	4			

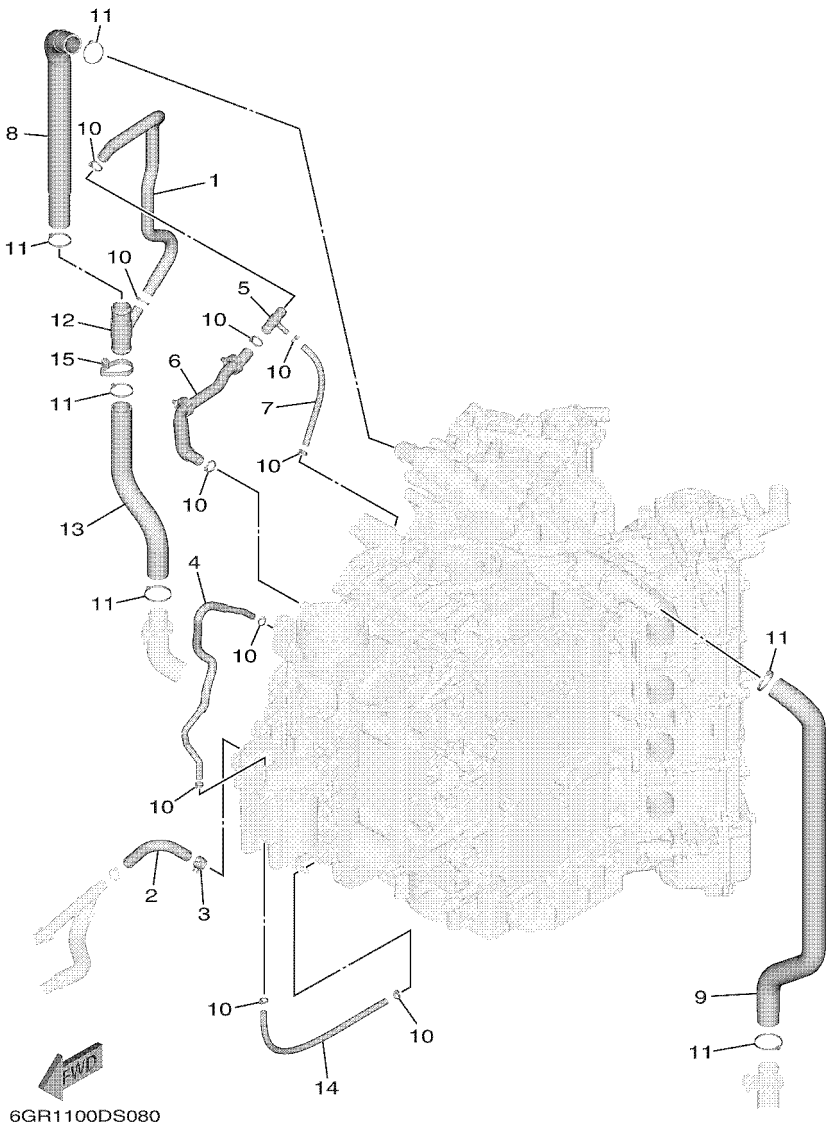

FIG. 8 CYLINDER & CRANKCASE 4

REF. NO.	PART NO.	DESCRIPTION	NSA	NSA2	NSA7			REMARKS
1	6GR–1244J–00	HOSE 6	1	1	1			
2	6GR–42541–00	PIPE 1	1	1	1			
3	90467–150A5	CLIP	1	1	1			
4	90445–09048	HOSE (L400)	1	1	1			
5	6GR–24376–00	PIPE, JOINT 1	1	1	1			
6	6GR–12551–00	HOSE 7	1	1	1			
7	90445–09M00	HOSE (L180)	1	1	1			
8	6GR–1243A–00	HOSE 1	1	1	1			
9	6GR–1243E–00	HOSE 2	1	1	1			
10	90465–11M10	CLAMP	10	10	10			
11	90465–11M59	CLAMP	6	6	6			
12	6GR–12594–00	JOINT, HOSE 4	1	1	1			
13	6GR–1244H–00	HOSE 5	1	1	1			
14	90445–09304	HOSE (L310)	1	1	1			
15	90465–13M24	CLAMP	1	1	1			

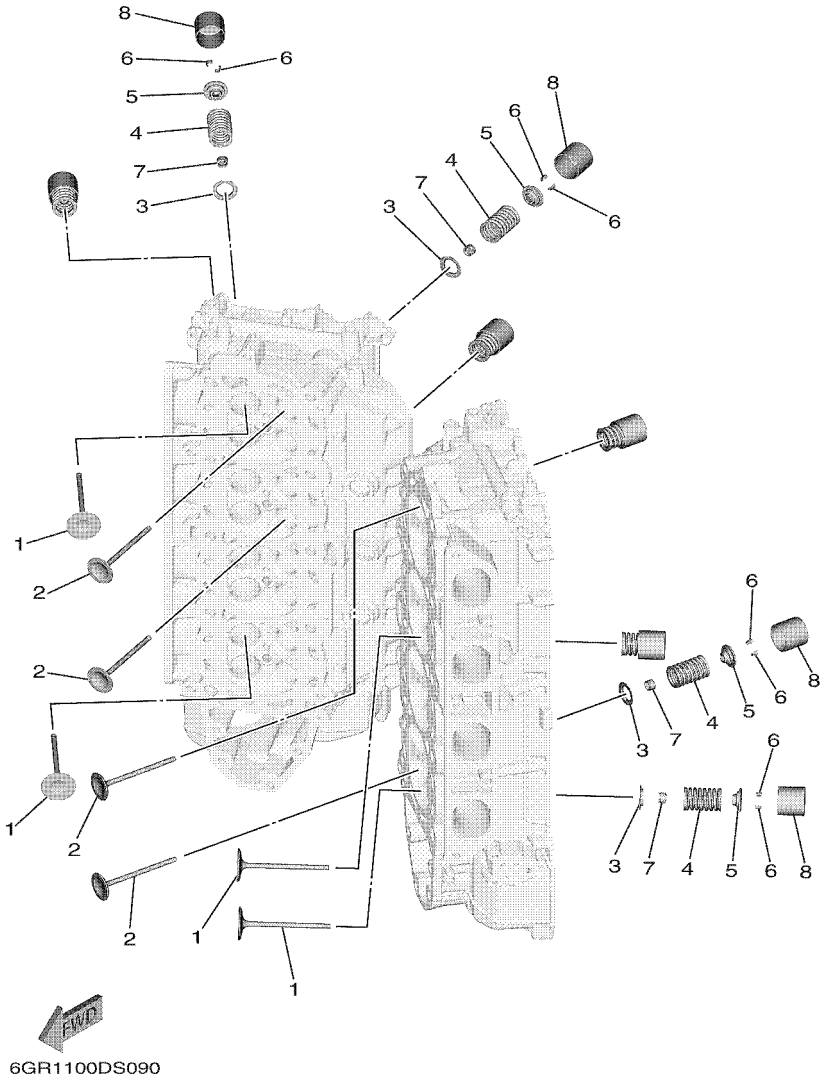

FIG. 9 VALVE 1

REF. NO.	PART NO.	DESCRIPTION	NSA	NSA2	NSA7			REMARKS
1	6GR–12111–00	VALVE, INTAKE	16	16	16			
2	6DX–12121–00	VALVE, EXHAUST	16	16	16			
3	K0F–A3743–00	SEAT, VALVE SPRING	32	32	32			
4	6CB–12113–00	SPRING, VALVE INNER	32	32	32			
5	K0F–A3741–00	RETAINER, VALVE SPRING	32	32	32			
6	K0F–A3742–00	LOCK, VALVE SPRING RETAINER	64	64	64			
7	51Y–12119–00	SEAL, VALVE STEM	32	32	32			
8	6GR–12153–00	LIFTER, VALVE (3.000)	32	32	32			UR
	6GR–12153–10	LIFTER, VALVE (3.025)	32	32	32			UR
	6GR–12153–20	LIFTER, VALVE (3.050)	32	32	32			UR
	6GR–12153–30	LIFTER, VALVE (3.075)	32	32	32			UR
	6GR–12153–40	LIFTER, VALVE (3.100)	32	32	32			UR
	6GR–12153–50	LIFTER, VALVE (3.120)	32	32	32			UR
	6GR–12153–60	LIFTER, VALVE (3.140)	32	32	32			UR
	6GR–12153–70	LIFTER, VALVE (3.160)	32	32	32			UR
	6GR–12153–80	LIFTER, VALVE (3.180)	32	32	32			UR
	6GR–12153–90	LIFTER, VALVE (3.200)	32	32	32			UR
	6GR–12153–A0	LIFTER, VALVE (3.220)	32	32	32			UR
	6GR–12153–B0	LIFTER, VALVE (3.240)	32	32	32			UR
	6GR–12153–C0	LIFTER, VALVE (3.260)	32	32	32			UR
	6GR–12153–D0	LIFTER, VALVE (3.280)	32	32	32			UR
	6GR–12153–E0	LIFTER, VALVE (3.300)	32	32	32			UR
	6GR–12153–F0	LIFTER, VALVE (3.320)	32	32	32			UR
	6GR–12153–G0	LIFTER, VALVE (3.340)	32	32	32			UR
	6GR–12153–H0	LIFTER, VALVE (3.360)	32	32	32			UR
	6GR–12153–J0	LIFTER, VALVE (3.380)	32	32	32			UR
	6GR–12153–K0	LIFTER, VALVE (3.400)	32	32	32			UR

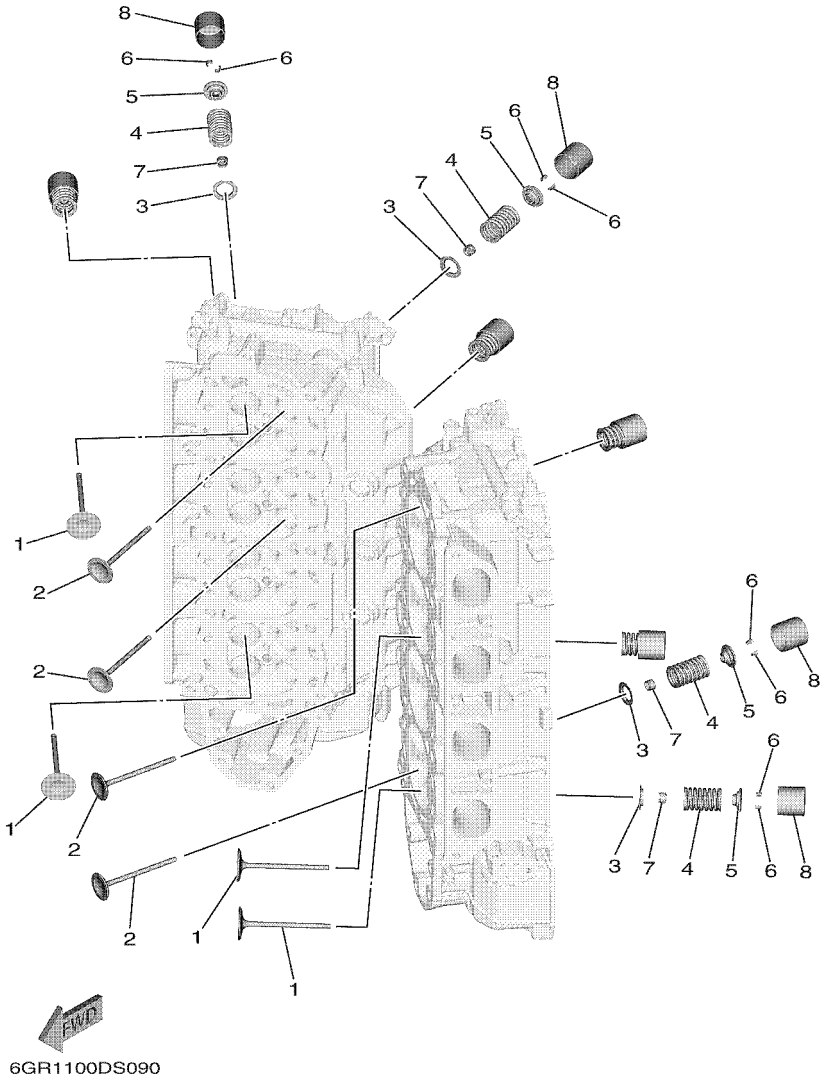

FIG. 9 VALVE 1

REF. NO.	PART NO.	DESCRIPTION	NSA	NSA2	NSA7			REMARKS
8	6GR–12153–L0	LIFTER, VALVE (3.420)	32	32	32			UR
	6GR–12153–M0	LIFTER, VALVE (3.440)	32	32	32			UR
	6GR–12153–N0	LIFTER, VALVE (3.460)	32	32	32			UR
	6GR–12153–P0	LIFTER, VALVE (3.480)	32	32	32			UR
	6GR–12153–R0	LIFTER, VALVE (3.500)	32	32	32			UR
	6GR–12153–S0	LIFTER, VALVE (3.520)	32	32	32			UR
	6GR–12153–T0	LIFTER, VALVE (3.540)	32	32	32			UR
	6GR–12145–00	LIFTER, VALVE (3.560)	32	32	32			UR
	6GR–12145–10	LIFTER, VALVE (3.580)	32	32	32			UR
	6GR–12145–20	LIFTER, VALVE (3.600)	32	32	32			UR
	6GR–12145–30	LIFTER, VALVE (3.625)	32	32	32			UR
	6GR–12145–40	LIFTER, VALVE (3.650)	32	32	32			UR
	6GR–12145–50	LIFTER, VALVE (3.675)	32	32	32			UR
	6GR–12145–60	LIFTER, VALVE (3.700)	32	32	32			UR

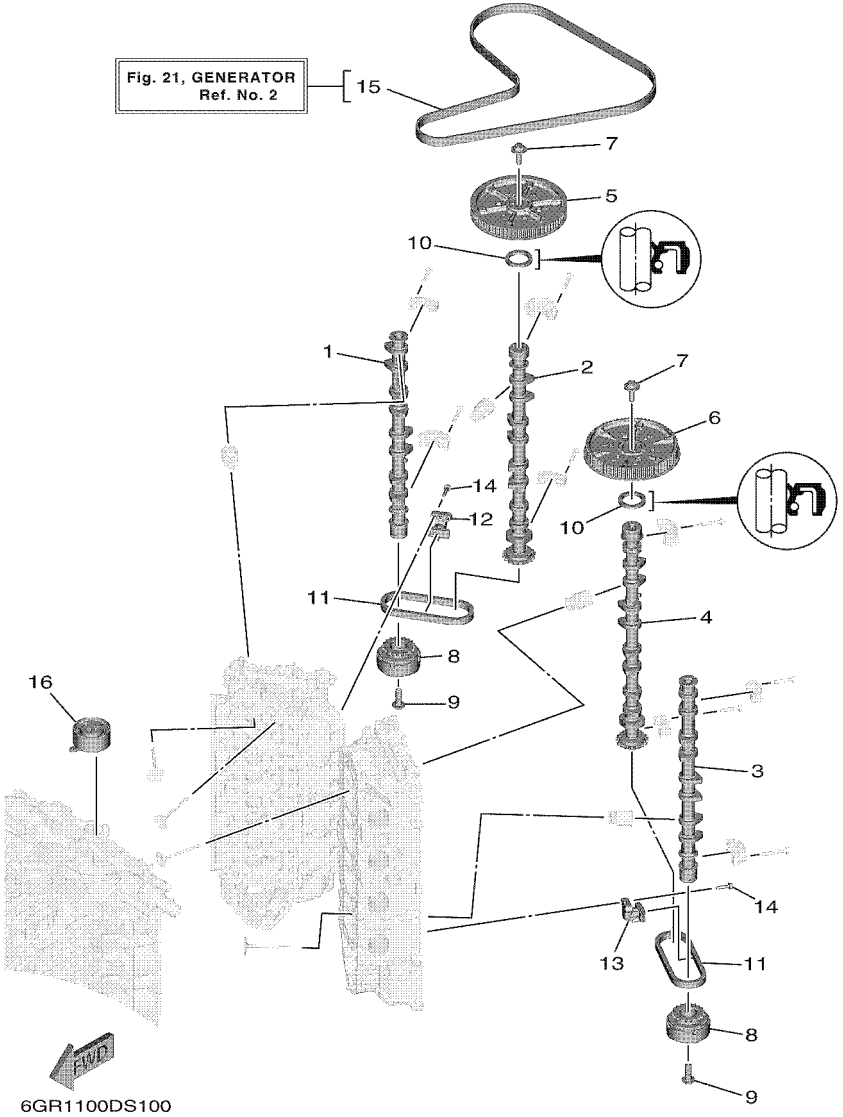

FIG. 10 VALVE 2

REF. NO.	PART NO.	DESCRIPTION	NSA	NSA2	NSA7			REMARKS
1	6GR–12171–00	CAMSHAFT 1	1	1	1			
2	6GR–12181–00	CAMSHAFT 2	1	1	1			
3	6GR–12172–00	CAMSHAFT 3	1	1	1			
4	6GR–12182–00	CAMSHAFT 4	1	1	1			
5	6GR–115A0–00	DRIVEN GEAR ASSY	1	1	1			
6	6GR–11567–00	GEAR, DRIVEN 2	1	1	1			
7	90119–10050	BOLT, WITH WASHER	2	2	2			
8	6GR–12645–00	PULLEY ASSY 1	2	2	2			
9	90401–12002	BOLT, UNION	2	2	2			
10	93102–38008	OIL SEAL	2	2	2			
11	94581–99044	CHAIN	2	2	2			
12	6GR–12210–00	TENSIONER ASSY, CAM CHAIN	1	1	1			
13	6GR–12230–00	TENSIONER ASSY, CAM CHAIN 2	1	1	1			
14	90105–06037	BOLT, FLANGE	4	4	4			
15	6GR–W4624–00	BELT (WITH ROTOR BOLTS)	1	1	1			
16	6P2–11590–01	TENSIONER ASSY	1	1	1			

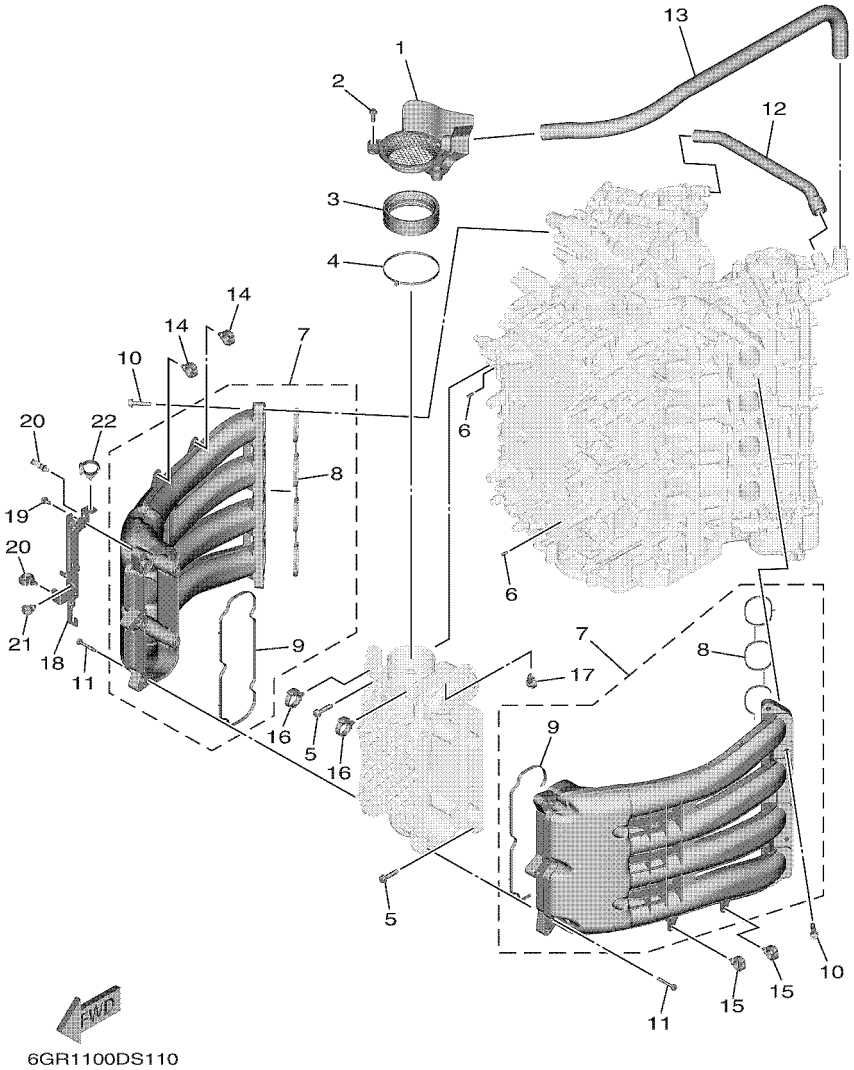

FIG. 11 INTAKE

REF. NO.	PART NO.	DESCRIPTION	NSA	NSA2	NSA7			REMARKS
1	6GR–14440–00	SILENCER ASSY, INTAKE	1	1	1			
2	95895–06020	BOLT, FLANGE	2	2	2			
3	6AW–1441J–00	PIPE, SILENCER	1	1	1			
4	90464–99004	CLAMP	1	1	1			
5	90119–08022	BOLT, WITH WASHER	6	6	6			
6	91690–50014	PIN, SPRING	2	2	2			
7	6GR–13641–00	MANIFOLD, INTAKE 1	2	2	2			
8	6GR–13645–00	.GASKET, MANIFOLD 1	1	1	1			
9	6GR–13646–00	.GASKET, MANIFOLD 2	1	1	1			
10	90119–08022	BOLT, WITH WASHER	10	10	10			
11	90119–06MA6	BOLT, WITH WASHER	10	10	10			
12	6GR–1531A–00	HOSE, BREATHER 1	1	1	1			
13	6GR–1531A–10	HOSE, BREATHER 1	1	1	1			
14	90464–20181	CLAMP	2	2	2			
15	90464–20181	CLAMP	2	2	2			
16	90464–12183	CLAMP	2	2	2			
17	90464–13249	CLAMP	1	1	1			
18	6GR–8257G–00	CLAMP, CORD	1	1	1			
19	95895–06012	BOLT, FLANGE	2	2	2			
20	90464–20181	CLAMP	2	2	2			
21	90464–13249	CLAMP	1	1	1			
22	90464–12183	CLAMP	1	1	1			

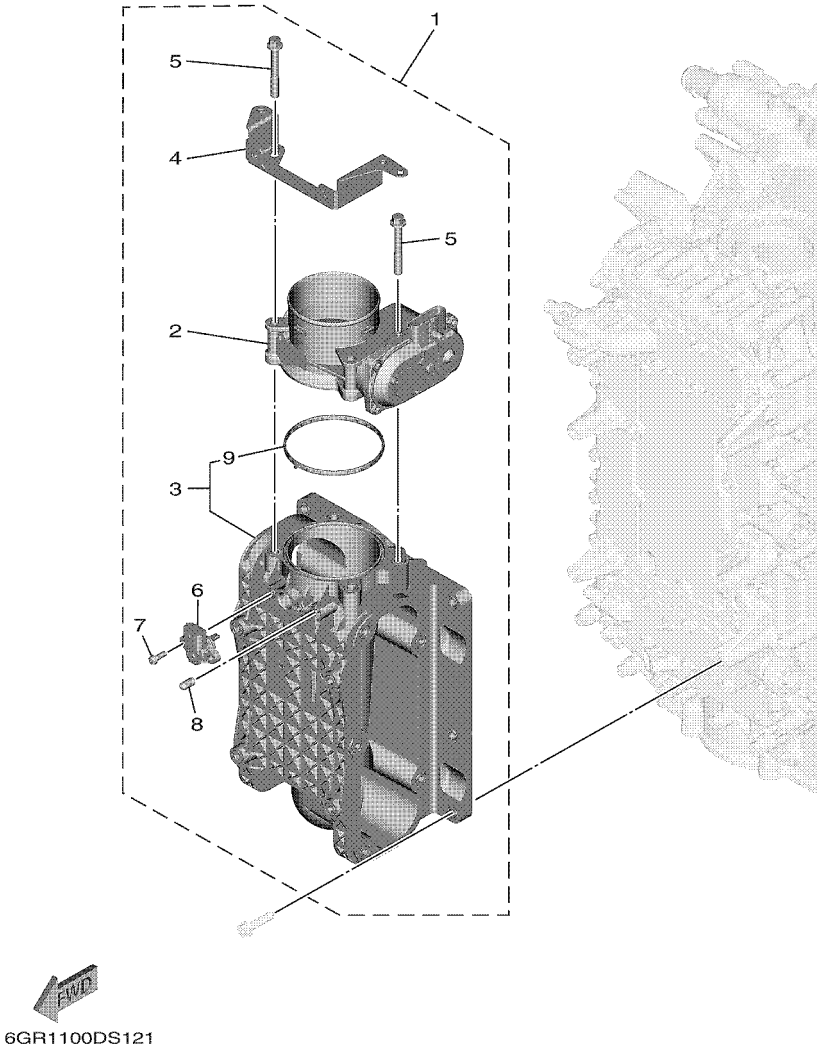

FIG. 12 THROTTLE BODY ASSY

REF. NO.	PART NO.	DESCRIPTION	NSA	NSA2	NSA7			REMARKS
1	6GR–13750–00	THROTTLE BODY ASSY	1	1	1			
2	6GR–13751–00	.BODY, THROTTLE 1	1	1	1			
3	6GR–13711–00	.MIXING BODY	1	1	1			
4	6GR–13898–00	.HOLDER	1	1	1			
5	90105–08M36	.BOLT, FLANGE	4	4	4			
6	68F–83688–10	.SENSOR ASSY	1	1	1			
7	68V–81147–00	.SCREW 3	2	2	2			
8	63P–13643–00	.COVER, MANIFOLD	1	1	1			
9	6GR–13556–00	..GASKET, MANIFOLD	1	1	1			

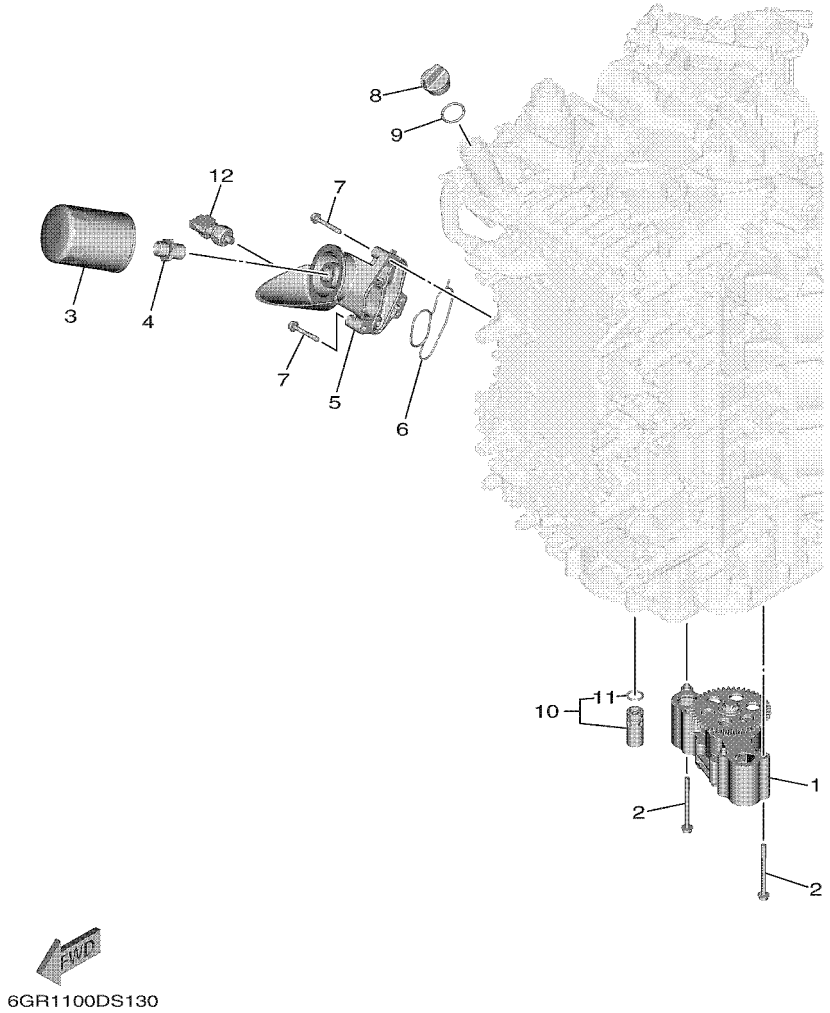

FIG. 13 OIL PUMP

REF. NO.	PART NO.	DESCRIPTION	NSA	NSA2	NSA7			REMARKS
1	6GR–13300–00	OIL PUMP ASSY	1	1	1			
2	95817–06075	BOLT, FLANGE	4	4	4			
3	N26–13440–02	ELEMENT ASSY, OIL CLEANER	1	1	1			
4	90401–19001	BOLT, UNION	1	1	1			
5	6GR–13446–00	CONNECTOR	1	1	1			
6	6GR–13477–00	GASKET	1	1	1			
7	90105–06151	BOLT, FLANGE	3	3	3			
8	6G8–15363–00	PLUG, OIL	1	1	1			
9	93210–24M79	O-RING	1	1	1			
10	6GR–13490–00	RELIEF VALVE ASSY	1	1	1			
11	6GR–13473–00	.O-RING	1	1	1			
12	6AW–83651–00	SENDER, OIL PRESSURE	1	1	1			

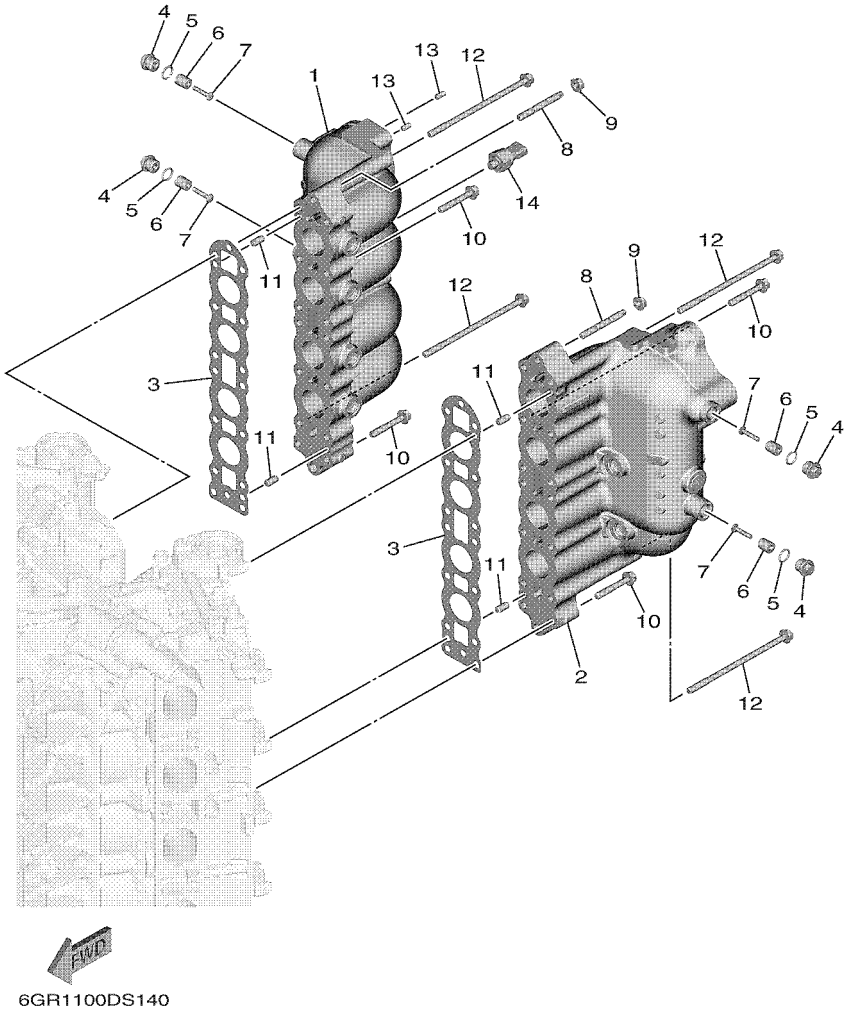

FIG. 14 EXHAUST 1

REF. NO.	PART NO.	DESCRIPTION	NSA	NSA2	NSA7			REMARKS
1	6GR–14615–00–9S	JOINT, EXHAUST 1	1	1	1			
2	6GR–14625–00–9S	JOINT, EXHAUST 2	1	1	1			
3	6GR–14613–00	GASKET, EXHAUST PIPE	2	2	2			
4	6G8–11197–A0	PLUG, BLIND	4	4	4			
5	93210–13M63	O-RING	4	4	4			
6	6G8–11325–00	ANODE	4	4	4			
7	98980–05025	SCREW, BIND	4	4	4			
8	90116–08037	BOLT, STUD	4	4	4			
9	90179–08M34	NUT	4	4	4			
10	90105–08175	BOLT, FLANGE	14	14	14			
11	93608–16M16	PIN, DOWEL	4	4	4			
12	90105–08266	BOLT, FLANGE	12	12	12			
13	93606–12019	PIN, DOWEL	2	2	2			
14	6GR–8366B–00	SENSOR, WATER PRESSURE	1	1	1			

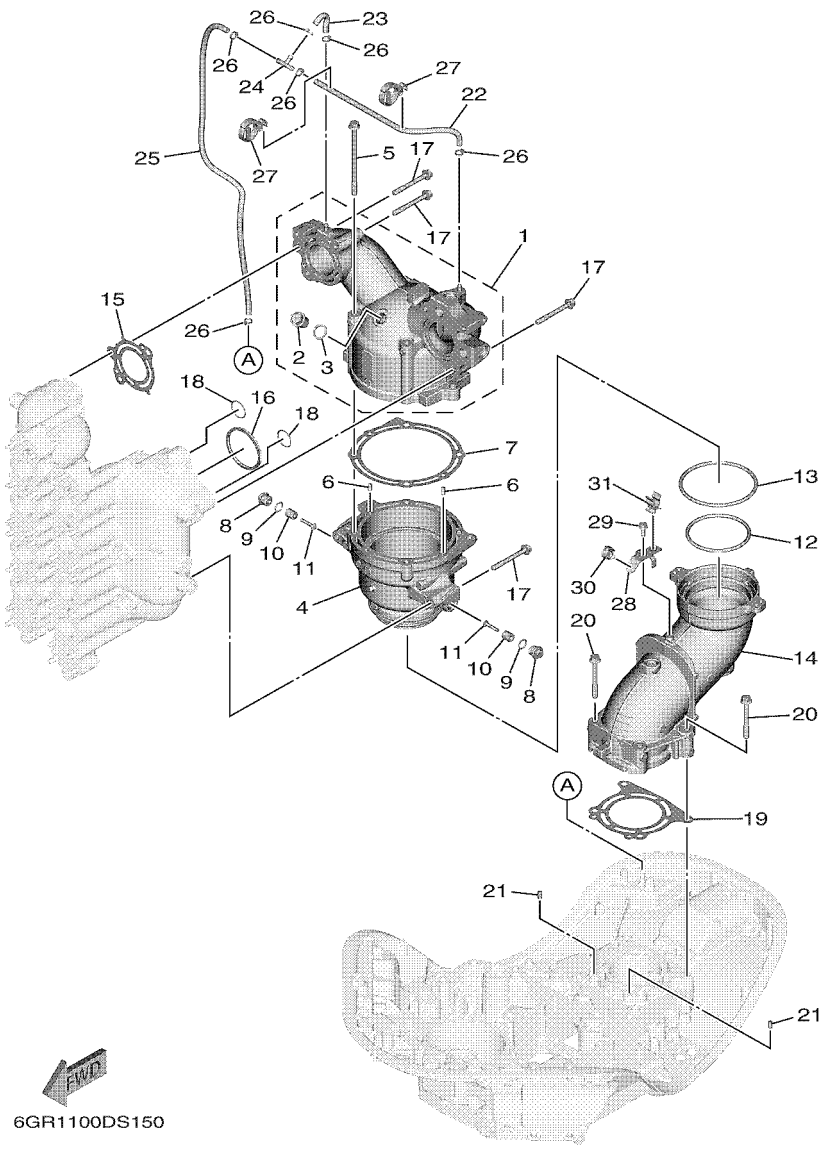

FIG. 15 EXHAUST 2

REF. NO.	PART NO.	DESCRIPTION	NSA	NSA2	NSA7			REMARKS
1	6GR–14635–00–9S	JOINT, EXHAUST 3	1	1	1			
2	90340–18M09	.PLUG, STRAIGHT SCREW	1	1	1			
3	90201–186F1	.WASHER, PLATE	1	1	1			
4	6GR–14645–00–9S	JOINT, EXHAUST 4	1	1	1			
5	90105–08268	BOLT, FLANGE	4	4	4			
6	93606–12019	PIN, DOWEL	2	2	2			
7	6GR–41124–00	GASKET, EXHAUST OUTER COVER	1	1	1			
8	6G8–11197–A0	PLUG, BLIND	2	2	2			
9	93210–13M63	O-RING	2	2	2			
10	6G8–11325–00	ANODE	2	2	2			
11	98980–05025	SCREW, BIND	2	2	2			
12	93210–90001	O-RING	1	1	1			
13	93211–10001	O-RING	1	1	1			
14	6GR–14656–00–9S	JOINT, EXHAUST 5	1	1	1			
15	6GR–41114–00	GASKET, EXHAUST OUTER COVER	1	1	1			
16	6GR–14643–00	GASKET 3	1	1	1			
17	90105–08220	BOLT, FLANGE	7	7	7			
18	93210–26003	O-RING	2	2	2			
19	6GR–41134–00	GASKET, EXHAUST MANIFOLD	1	1	1			
20	90105–08220	BOLT, FLANGE	4	4	4			
21	93606–12019	PIN, DOWEL	2	2	2			
22	90445–09104	HOSE (L300)	1	1	1			
23	6GR–12482–00	PIPE 2	1	1	1			
24	688–24378–00	PIPE, JOINT 3	1	1	1			
25	90445–09047	HOSE (L630)	1	1	1			
26	90465–11M10	CLAMP	6	6	6			
27	90464–29001	CLAMP	2	2	2			

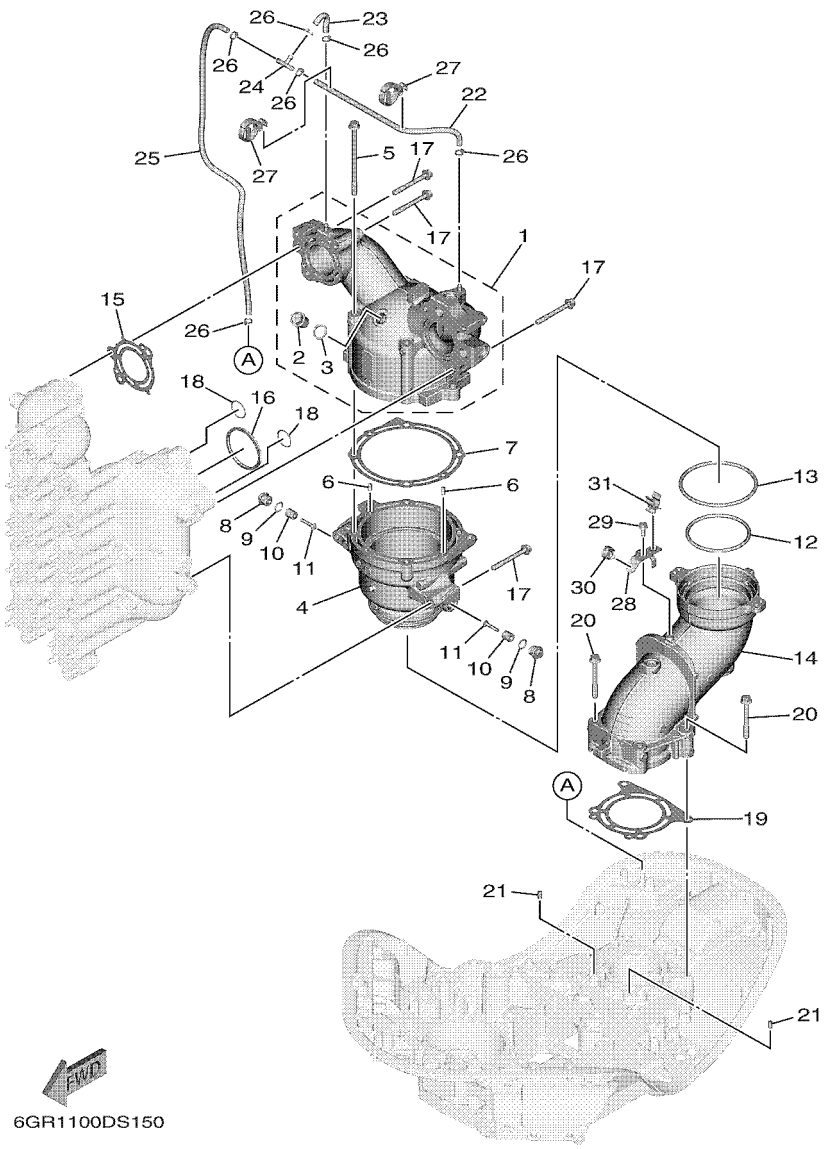

FIG. 15 EXHAUST 2

REF. NO.	PART NO.	DESCRIPTION	NSA	NSA2	NSA7			REMARKS
28	6GR–82588–00	PLATE	1	1	1			
29	95895–06016	BOLT, FLANGE	1	1	1			
30	90464–13249	CLAMP	1	1	1			
31	90464–12015	CLAMP	1	1	1			

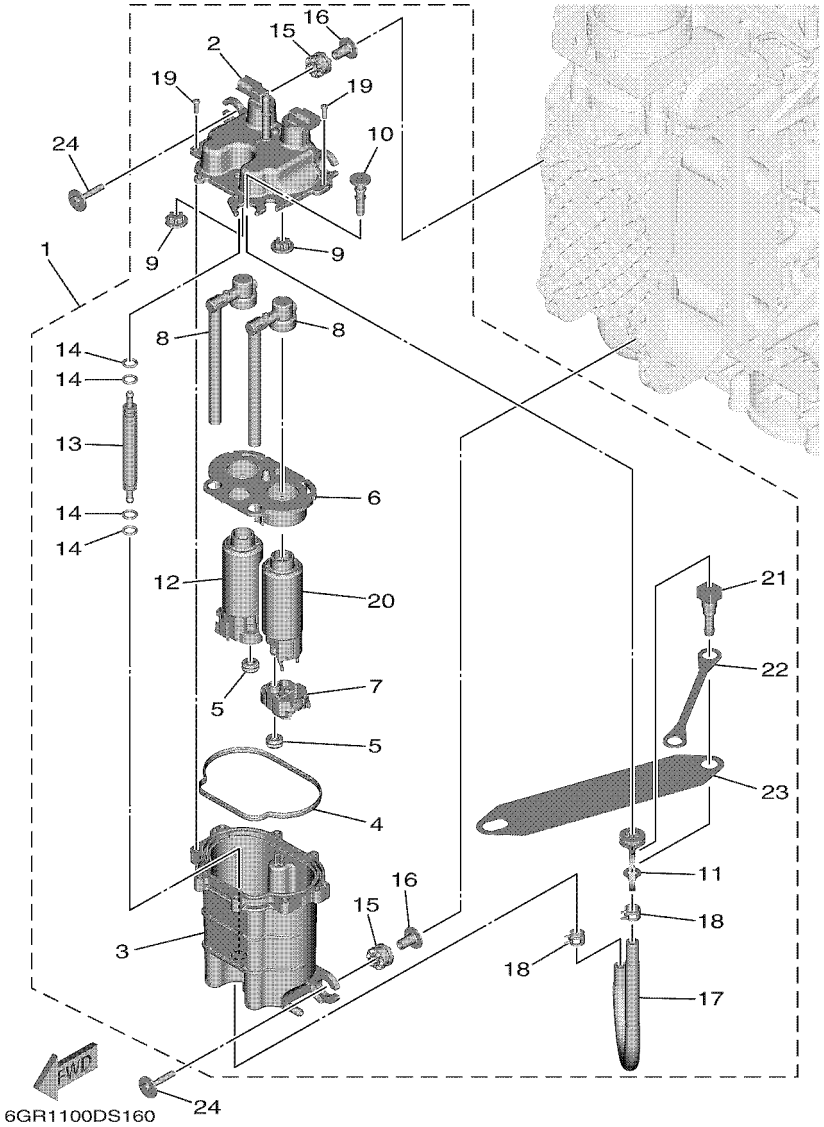

FIG. 16 VAPOR SEPARATOR

REF. NO.	PART NO.	DESCRIPTION	NSA	NSA2	NSA7			REMARKS
1	6GR–24220–00	FUEL TANK COMP. 2	1	1	1			
2	6GR–24223–00	.COVER, FUEL TANK ASSY	1	1	1			
3	6GR–24224–00	.CASE, FUEL TANK ASSY.	1	1	1			
4	6GR–24218–00	.GASKET	1	1	1			
5	6GR–13781–00	.DAMPER, PUMP	2	2	2			
6	6GR–2441R–00	.PLATE, BAFFLE 1	1	1	1			
7	6GR–244A1–00	.CASE, PUMP 1	1	1	1			
8	6GR–13938–00	.PIPE	2	2	2			
9	6GR–13593–00	.DAMPER	2	2	2			
10	6GR–24196–00	.PLUG, DRAIN	1	1	1			
11	6GR–2419A–00	.HOLDER	1	1	1			
12	6GR–24430–00	.FUEL PUMP ASSY	1	1	1			
13	6GR–21841–00	.COOLER	1	1	1			
14	6FM–14562–00	.O-RING	4	4	4			
15	6CB–13593–00	.DAMPER	4	4	4			
16	6GR–13716–00	.COLLAR	4	4	4			
17	6GR–14197–00	.PIPE	1	1	1			
18	68V–13577–00	.CLIP	2	2	2			
19	6GR–14567–00	.SCREW	8	8	8			
20	6GR–24420–10	.FUEL PUMP ASSY	1	1	1			
21	6AW–24300–10	.FUEL PIPE JOINT	1	1	1			
22	6GR–24113–00	.PLATE, CONNECTING	1	1	1			
23	6GR–2415H–00	.LABEL, WARNING	1	1	1			
24	90119–06269	BOLT, WITH WASHER	4	4	4			

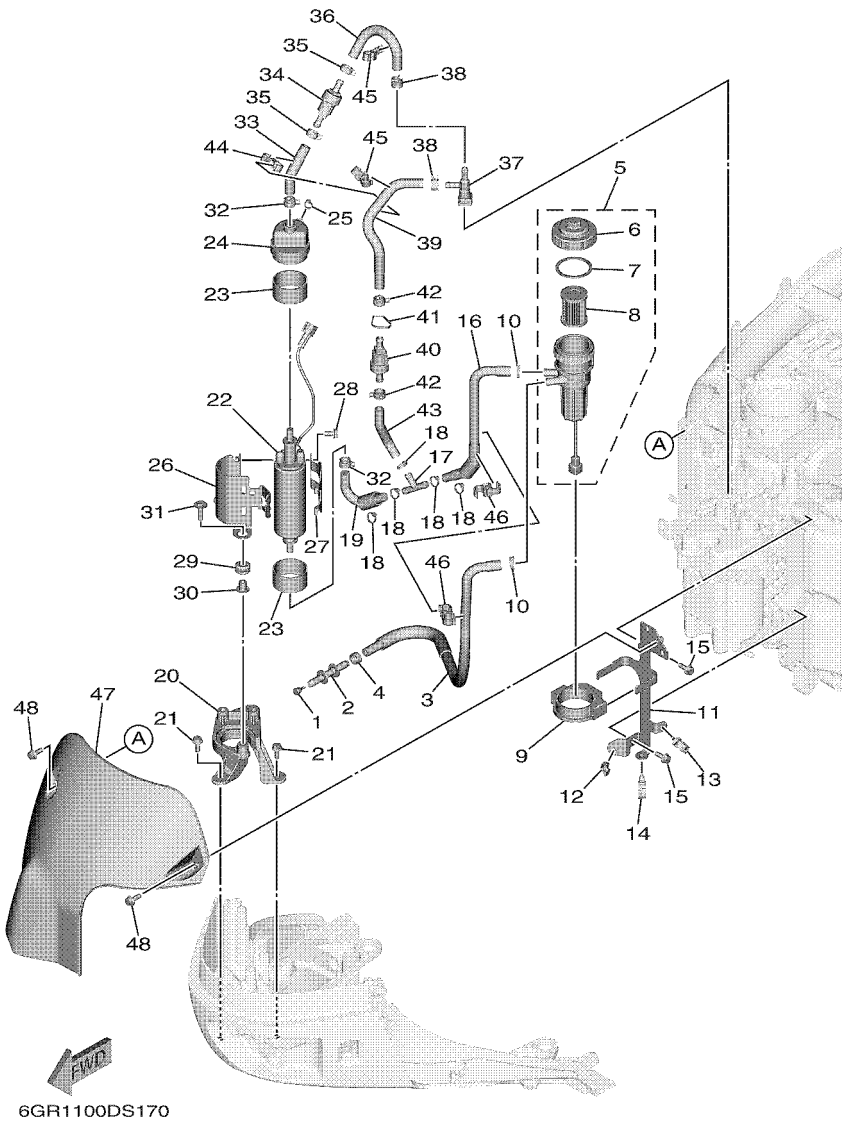

6GR1100DS170

FIG. 17 FUEL 1

REF. NO.	PART NO.	DESCRIPTION	NSA	NSA2	NSA7			REMARKS
1	689–85547–00	DAMPER	1	1	1			
2	6AW–24377–01	PIPE, JOINT 2	1	1	1			
3	6GR–24311–00	PIPE, FUEL 1	1	1	1			
4	6E5–24351–51	BAND 1	1	1	1			
5	6GR–24560–00	FILTER ASSY	1	1	1			
6	6GR–24561–00	.BODY,FILTER	1	1	1			
7	6P3–24564–00	.GASKET	1	1	1			
8	6P3–24563–01	.ELEMENT, FILTER	1	1	1			
9	6GR–24568–00	BAND, FILTER	1	1	1			
10	90465–11M10	CLAMP	2	2	2			
11	6GR–24566–00	BRACKET, FILTER	1	1	1			
12	90464–11121	CLAMP	1	1	1			
13	90464–13249	CLAMP	1	1	1			
14	90464–18246	CLAMP	1	1	1			
15	95895–06016	BOLT, FLANGE	2	2	2			
16	6GR–24312–00	PIPE 2	1	1	1			
17	6E5–24378–00	PIPE, JOINT 3	1	1	1			
18	90465–11M10	CLAMP	5	5	5			
19	6GR–24321–00	PIPE 10	1	1	1			
20	6GR–24425–00	BRACKET, FUEL PUMP 1	1	1	1			
21	95895–06016	BOLT, FLANGE	3	3	3			
22	6GR–24410–00	FUEL PUMP ASSY	1	1	1			
23	6DA–24492–00	BUSH, FUEL PUMP	2	2	2			
24	6GR–24462–00	CAP, BLIND	1	1	1			
25	90465–11M10	CLAMP	1	1	1			
26	6GR–24491–00	BRACKET, FUEL PUMP	1	1	1			
27	6GR–24426–00	BRACKET, FUEL PUMP 2	1	1	1			

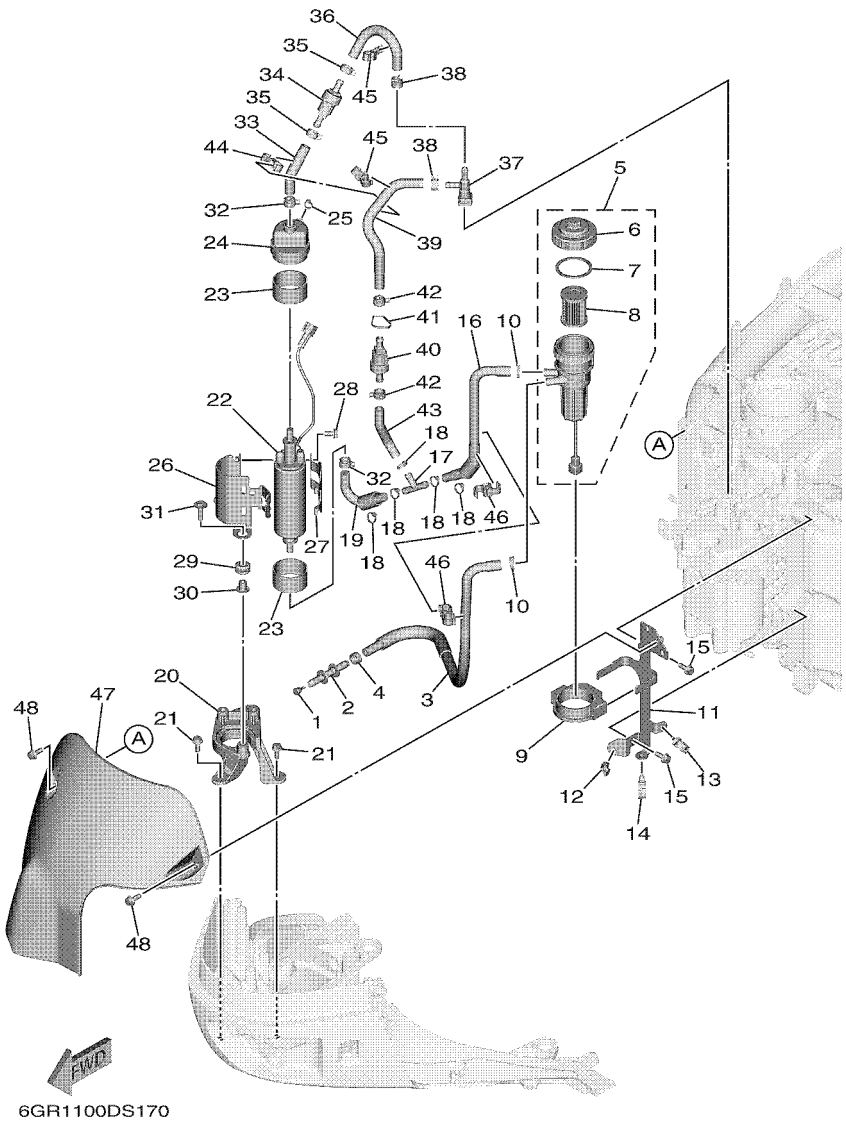

FIG. 17 FUEL 1

REF. NO.	PART NO.	DESCRIPTION	NSA	NSA2	NSA7			REMARKS
28	95895–06012	BOLT, FLANGE	2	2	2			
29	90480–10M23	GROMMET	3	3	3			
30	90387–06289	COLLAR	3	3	3			
31	90119–06M17	BOLT, WITH WASHER	3	3	3			
32	90467–140A9	CLIP	2	2	2			
33	6GR–24322–00	PIPE 11	1	1	1			
34	6R5–24408–10	FUEL FEED ASSY	1	1	1			
35	90467–140A9	CLIP	2	2	2			
36	6GR–24323–00	PIPE 12	1	1	1			
37	6P2–24300–00	FUEL PIPE JOINT	1	1	1			
38	90467–120A7	CLIP	2	2	2			
39	6GR–24324–00	PIPE 13	1	1	1			
40	6GR–24460–20	RELIEF VALVE ASSY	1	1	1			
41	90465–13M60	CLAMP	1	1	1			
42	90467–140A9	CLIP	2	2	2			
43	6GR–24325–00	PIPE 14	1	1	1			
44	90464–12009	CLAMP	1	1	1			
45	90464–12010	CLAMP	2	2	2			
46	90464–12009	CLAMP	2	2	2			
47	6GR–24596–00	COVER	1	1	1			
48	95895–06016	BOLT, FLANGE	3	3	3			

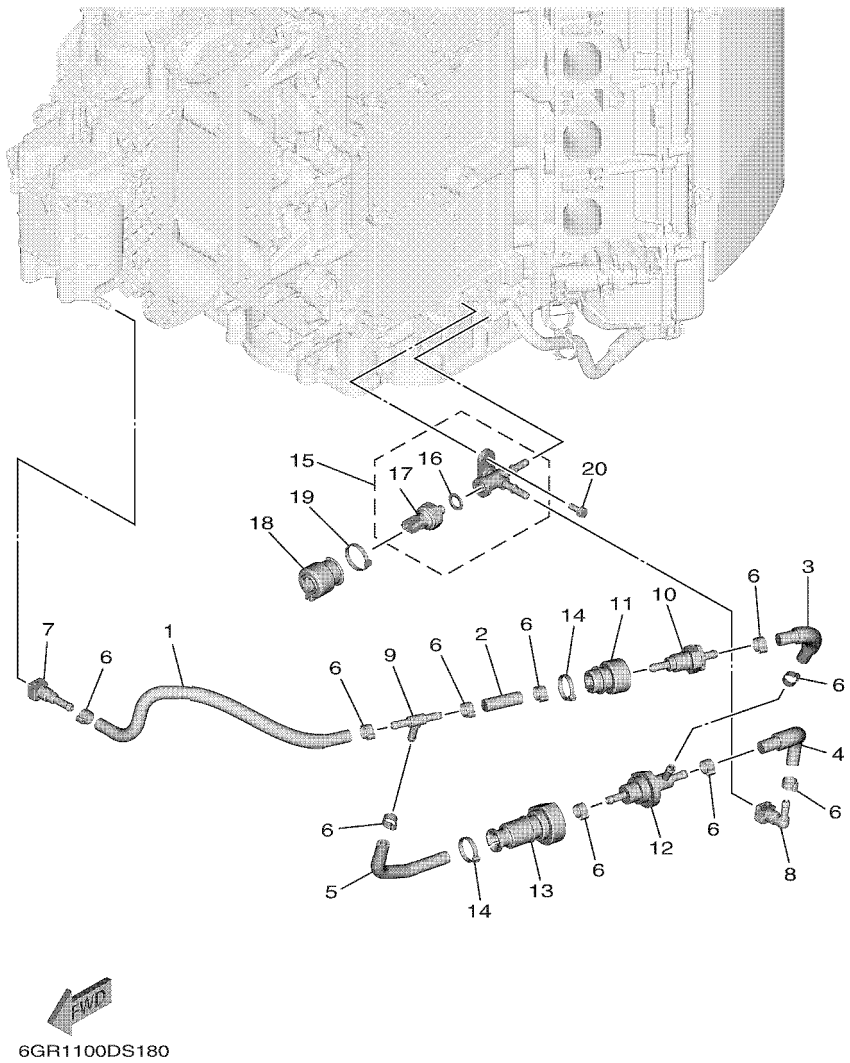

FIG. 18 FUEL 2

REF. NO.	PART NO.	DESCRIPTION	NSA	NSA2	NSA7			REMARKS
1	6GR–24313–00	PIPE 3	1	1	1			
2	6GR–24314–00	PIPE 4	1	1	1			
3	6GR–24315–00	PIPE 5	1	1	1			
4	6GR–24316–00	PIPE 6	1	1	1			
5	6GR–24317–00	PIPE 7	1	1	1			
6	90467–141A1	CLIP	10	10	10			
7	6AW–24300–10	FUEL PIPE JOINT	1	1	1			
8	6AW–24300–00	FUEL PIPE JOINT	1	1	1			
9	6CB–24461–00	PIPE, JOINT	1	1	1			
10	6GR–24408–00	FUEL FEED ASSY	1	1	1			
11	6GR–24217–00	COVER	1	1	1			
12	6GR–24460–00	RELIEF VALVE ASSY	1	1	1			
13	6GR–24474–00	COVER	1	1	1			
14	90465–13M97	CLAMP	2	2	2			
15	6GR–8A411–00	SENSOR UNIT 1	1	1	1			
16	6GR–825A8–00	.SEAL, SENSOR	1	1	1			
17	6GR–82421–00	.SENSOR, FUEL PRESSURE	1	1	1			
18	6GR–2464E–00	COVER, CAP	1	1	1			
19	90465–13M97	CLAMP	1	1	1			
20	97595–06516	BOLT, WITH WASHER	1	1	1			

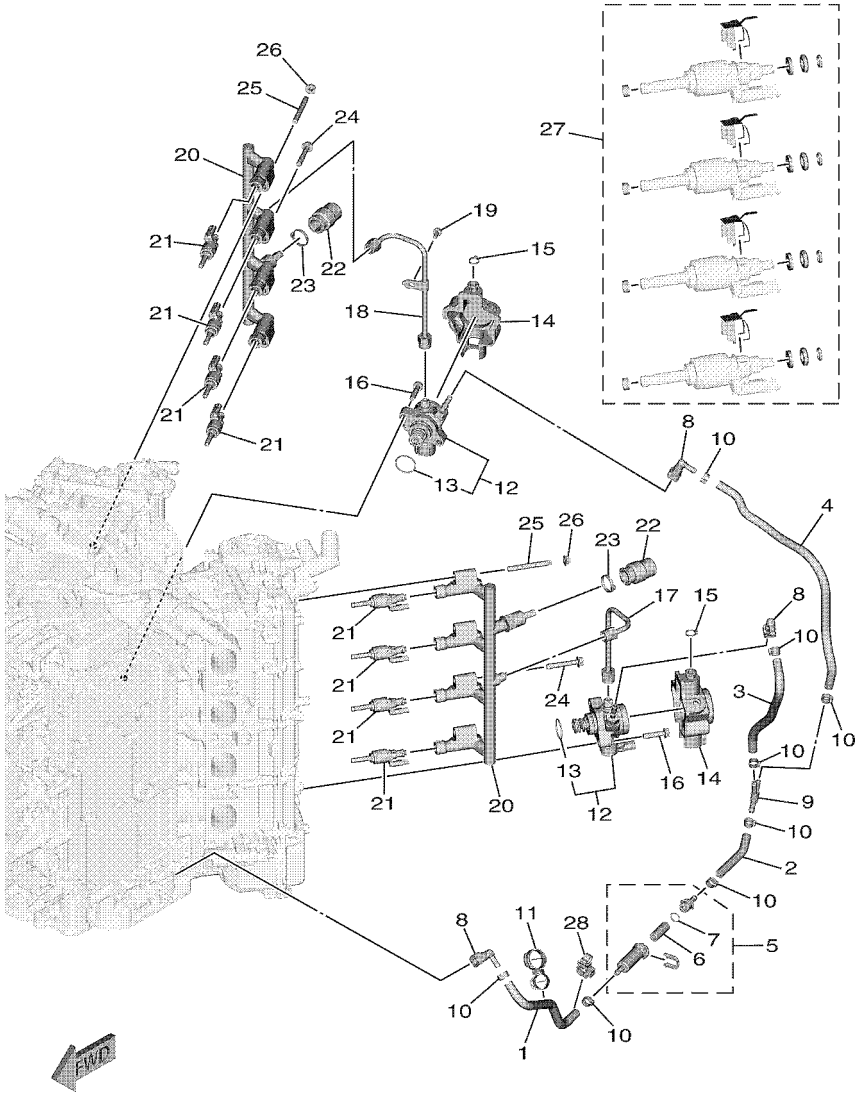

FIG. 19 FUEL 3

REF. NO.	PART NO.	DESCRIPTION	NSA	NSA2	NSA7			REMARKS
1	6GR–243A1–00	PIPE 15	1	1	1			
2	6GR–243A2–00	PIPE 16	1	1	1			
3	6GR–243A3–00	PIPE 17	1	1	1			
4	6GR–243A4–00	PIPE 18	1	1	1			
5	6GR–24251–00	STRAINER 1	1	1	1			
6	6GR–24501–00	.FILTER, FUEL	1	1	1			
7	6GR–13016–00	.O-RING	1	1	1			
8	6AW–24300–00	FUEL PIPE JOINT	3	3	3			
9	6CB–24461–00	PIPE, JOINT	1	1	1			
10	90467–141A1	CLIP	8	8	8			
11	90464–29223	CLAMP	1	1	1			
12	6GR–13910–00	FUEL PUMP ASSY	2	2	2			
13	6GR–12439–00	.O-RING	1	1	1			
14	6GR–24595–00	PROTECTOR	2	2	2			
15	90465–11M10	CLAMP	2	2	2			
16	97595–08535	BOLT, WITH WASHER	4	4	4			
17	6GR–14295–00	PIPE, FUEL	1	1	1			
18	6GR–14296–00	PIPE, FUEL 2	1	1	1			
19	95895–06014	BOLT, FLANGE	1	1	1			
20	6GR–13160–09	DELIVERY PIPE ASSY 1	2	2	2			
21	6GR–13761–00	INJECTOR	8	8	8			
22	6GR–24599–00	CAP	2	2	2			
23	90465–13M97	CLAMP	2	2	2			
24	90105–08175	BOLT, FLANGE	4	4	4			
25	90116–08037	BOLT, STUD	4	4	4			
26	90179–08M34	NUT	4	4	4			
27	6GR–W0005–00	O-RING SET	2	2	2			

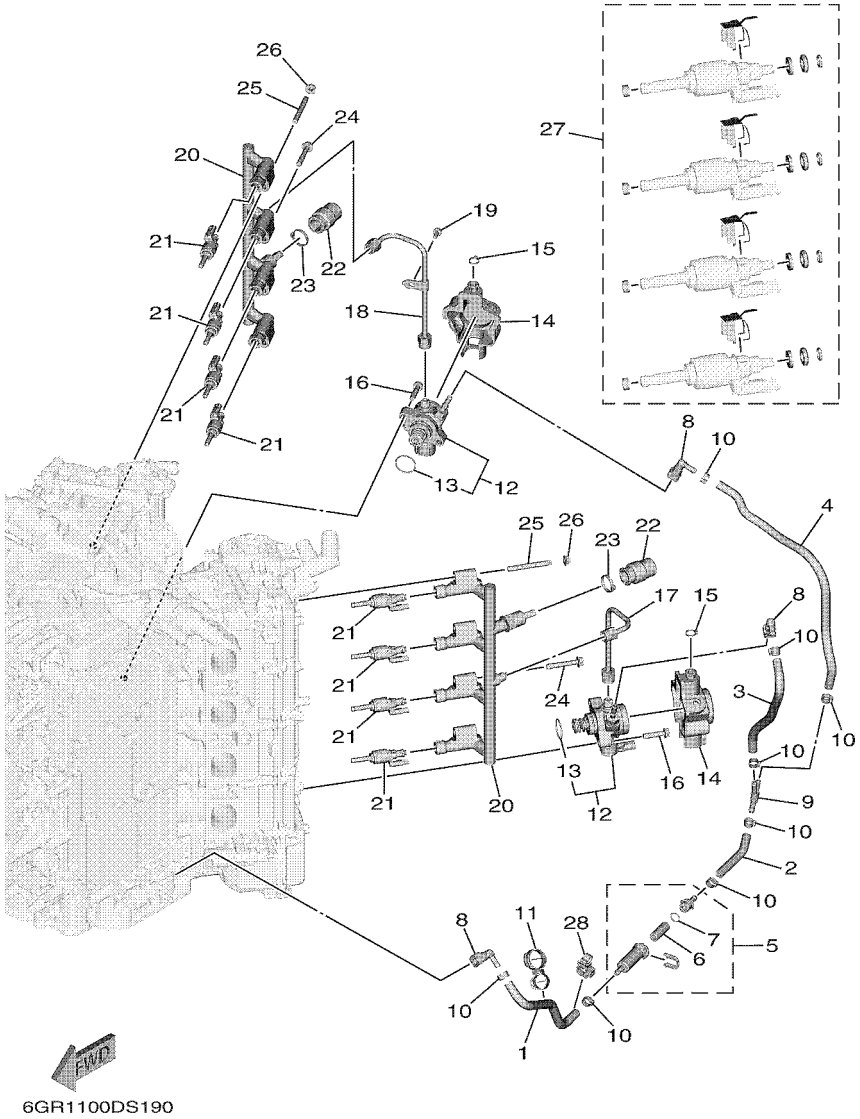

FIG. 19 FUEL 3

REF. NO.	PART NO.	DESCRIPTION	NSA	NSA2	NSA7			REMARKS
28	90464–16015	CLAMP	1	1	1			

FIG. 20 FUEL 4

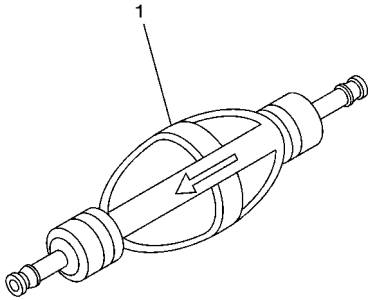

68V9110-J110

REF. NO.	PART NO.	DESCRIPTION	NSA	NSA2	NSA7			REMARKS
1	6AW–24360–01	PRIMER PUMP ASSY	1	1	1			AP

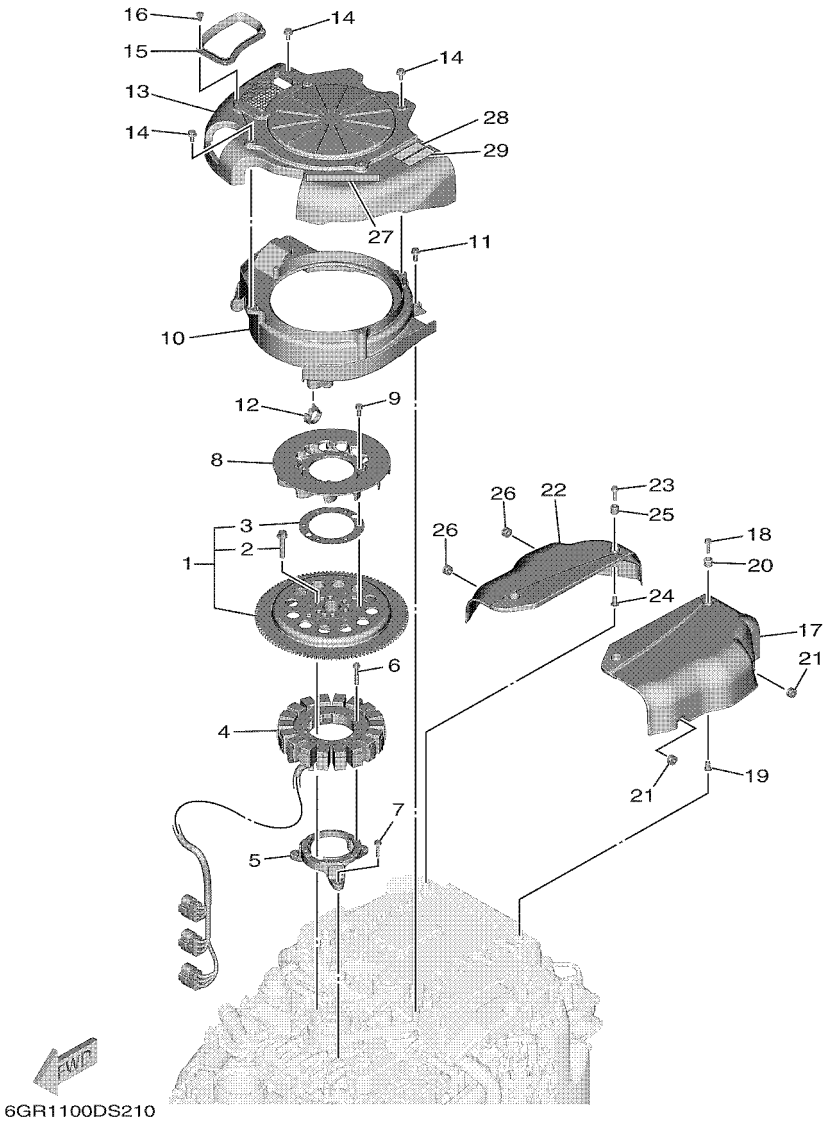

FIG. 21 GENERATOR

REF. NO.	PART NO.	DESCRIPTION	NSA	NSA2	NSA7			REMARKS
1	6GR–W8145–00	ROTOR ASSY WITH BOLTS	1	1	1			
2	6EK–W9010–00	.BOLT SET	1	1	1			
3	6GR–8398X–00	.WASHER, PLATE	1	1	1			
4	6GR–81410–00	STATOR ASSY	1	1	1			
5	6GR–85561–00	BASE, MAGNETO	1	1	1			
6	95022–06035	BOLT, FLANGE	6	6	6			
7	95895–06030	BOLT, FLANGE	3	3	3			
8	6GR–85586–00	FAN	1	1	1			
9	97595–06516	BOLT, WITH WASHER	4	4	4			
10	6GR–12651–00	AIR SHROUD, CYLINDER 1	1	1	1			
11	95895–06016	BOLT, FLANGE	3	3	3			
12	90464–12183	CLAMP	1	1	1			
13	6GR–12653–00	AIR SHROUD, CYLINDER 3	1	1	1			
14	95895–06012	BOLT, FLANGE	5	5	5			
15	6GR–12659–00	DAMPER, AIR SHROUD 2	1	1	1			
16	90269–05010	RIVET	5	5	5			
17	6GR–81942–00	COVER	1	1	1			
18	95895–06025	BOLT, FLANGE	2	2	2			
19	90387–06119	COLLAR	2	2	2			
20	6A0–82317–00	DAMPER, IGNITION COIL	2	2	2			
21	90480–12314	GROMMET	2	2	2			
22	6GR–81639–00	COVER	1	1	1			
23	95895–06025	BOLT, FLANGE	2	2	2			
24	90387–06119	COLLAR	2	2	2			
25	6A0–82317–00	DAMPER, IGNITION COIL	2	2	2			
26	90480–12314	GROMMET	2	2	2			
27	6GR–13437–60	MARK, CAUTION	1	1	1			

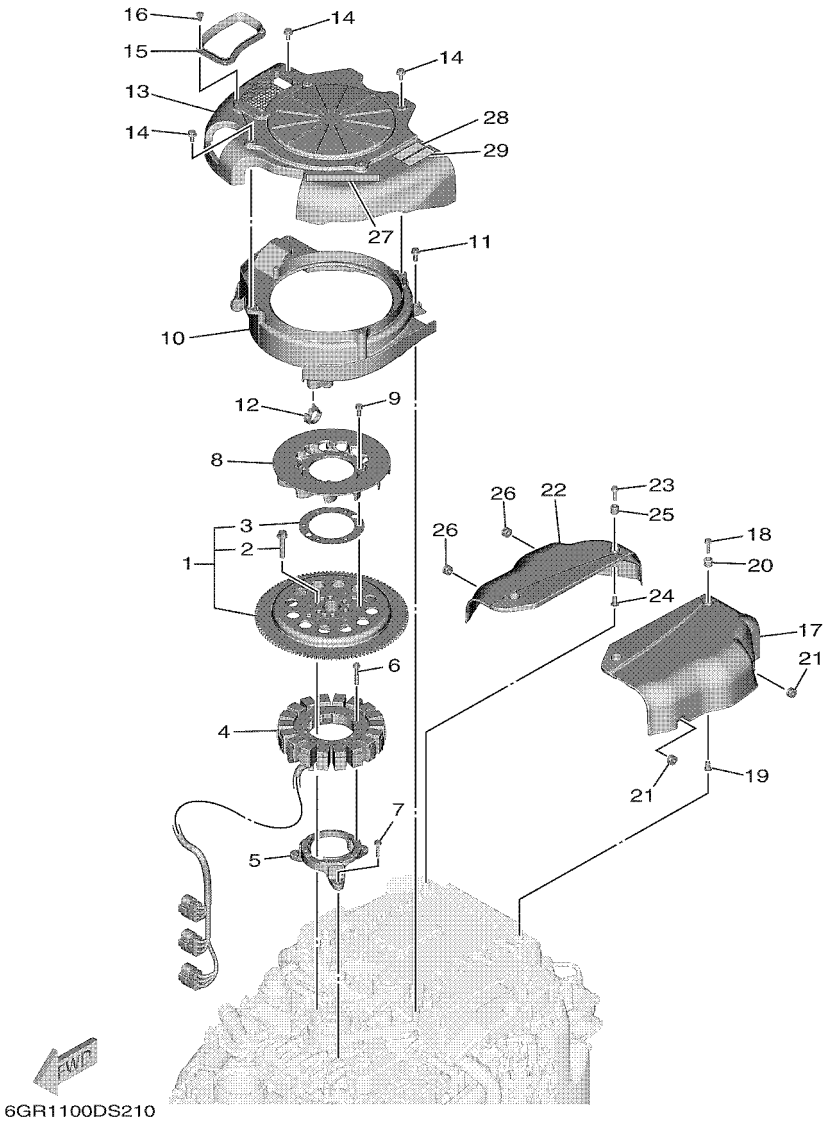

FIG. 21 GENERATOR

REF. NO.	PART NO.	DESCRIPTION	NSA	NSA2	NSA7			REMARKS
28	6EE–81994–40	LABEL, SAFETY	1	1	1			
29	6EE–81994–50	LABEL, SAFETY	1	1	1			

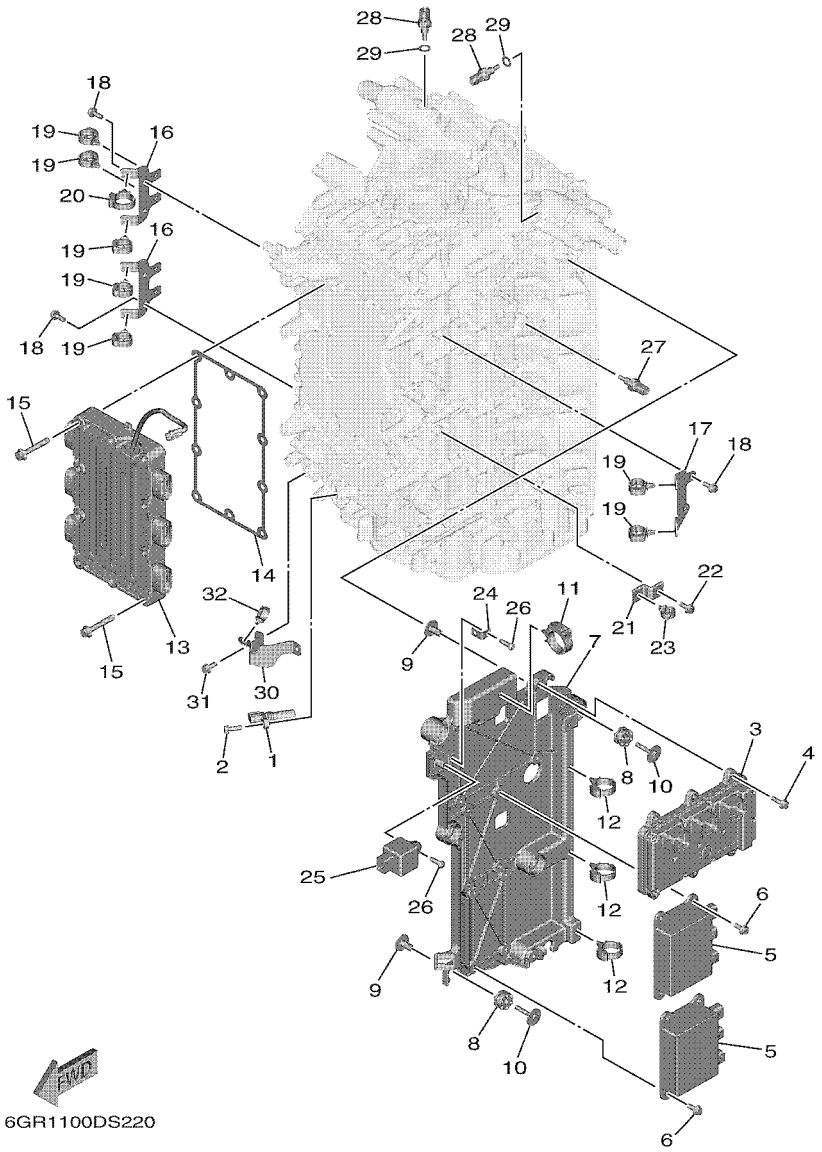

FIG. 22 ELECTRICAL 1

REF. NO.	PART NO.	DESCRIPTION	NSA	NSA2	NSA7			REMARKS
1	6GR–85895–00	CRANK POSITION SENSOR	1	1	1			
2	97595–06520	BOLT, WITH WASHER	1	1	1			
3	6GR–8591A–00	ENGINE CONTROL UNIT ASSY	1	1	1			
4	95895–06020	BOLT, FLANGE	4	4	4			
5	6GR–8591B–00	DRIVER, INJECTOR ASSY	2	2	2			
6	95895–06016	BOLT, FLANGE	8	8	8			
7	6GR–81948–00	BRACKET	1	1	1			
8	60V–85564–00	GROMMET	6	6	6			
9	90387–06176	COLLAR	6	6	6			
10	68F–85119–00	BOLT	6	6	6			
11	90464–32002	CLAMP	1	1	1			
12	90464–12183	CLAMP	3	3	3			
13	6GR–81960–00	RECTIFIER & REGULATOR ASSY	1	1	1			
14	6GR–81975–00	PLATE, RECTIFIER FITTING	1	1	1			
15	90105–08175	BOLT, FLANGE	10	10	10			
16	6GR–8132G–00	PLATE	2	2	2			
17	6GR–818D2–00	PLATE, 2	1	1	1			
18	95895–06016	BOLT, FLANGE	6	6	6			
19	90464–20181	CLAMP	7	7	7			
20	90464–12183	CLAMP	1	1	1			
21	6DA–82388–00	PLATE	1	1	1			
22	95895–06016	BOLT, FLANGE	1	1	1			
23	90464–13249	CLAMP	1	1	1			
24	68V–85548–01	HOLDER	1	1	1			
25	68V–81950–00	RELAY ASSY	1	1	1			
26	97780–60620	SCREW, TAPPING	2	2	2			
27	4P9–83591–00	THERMO UNIT	1	1	1			

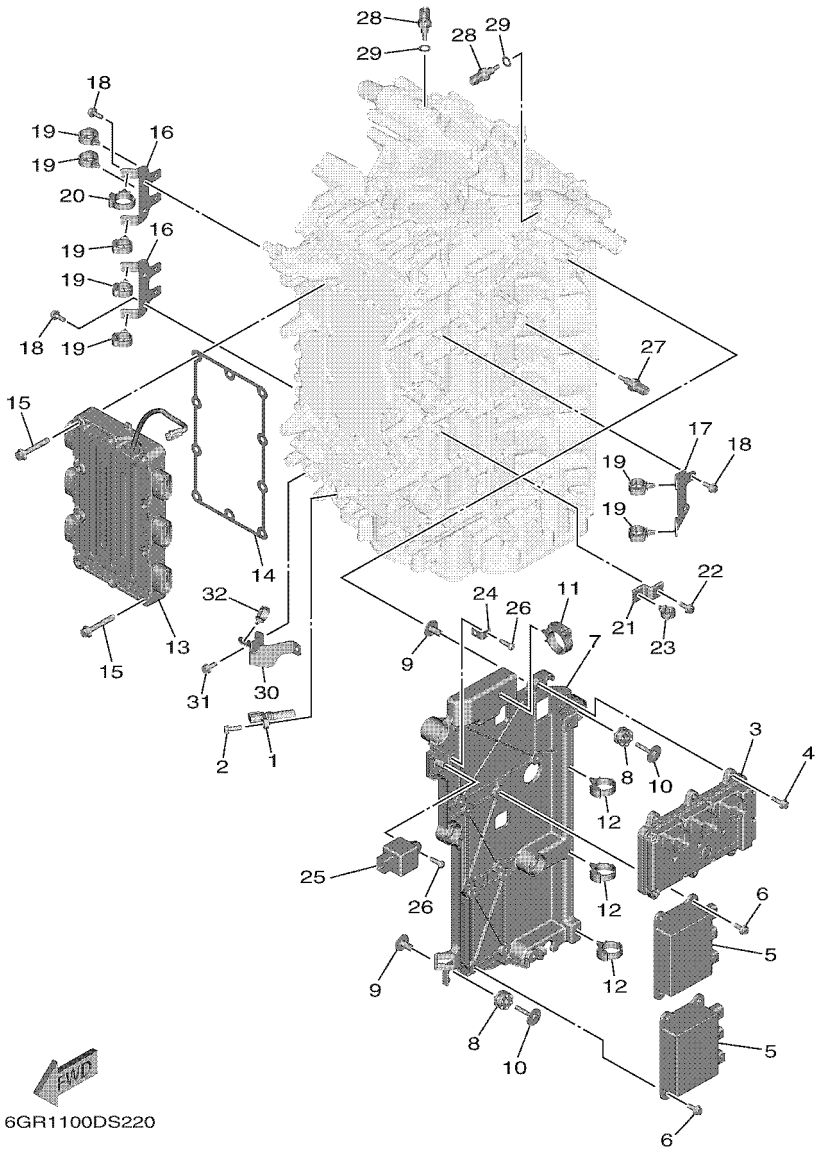

FIG. 22 ELECTRICAL 1

REF. NO.	PART NO.	DESCRIPTION	NSA	NSA2	NSA7			REMARKS
28	6GR–85790–00	THERMOSENSOR ASSY	2	2	2			
29	90430–10004	GASKET	2	2	2			
30	6GR–83614–00	BRACKET	1	1	1			
31	95895–06016	BOLT, FLANGE	2	2	2			
32	90464–13249	CLAMP	1	1	1			

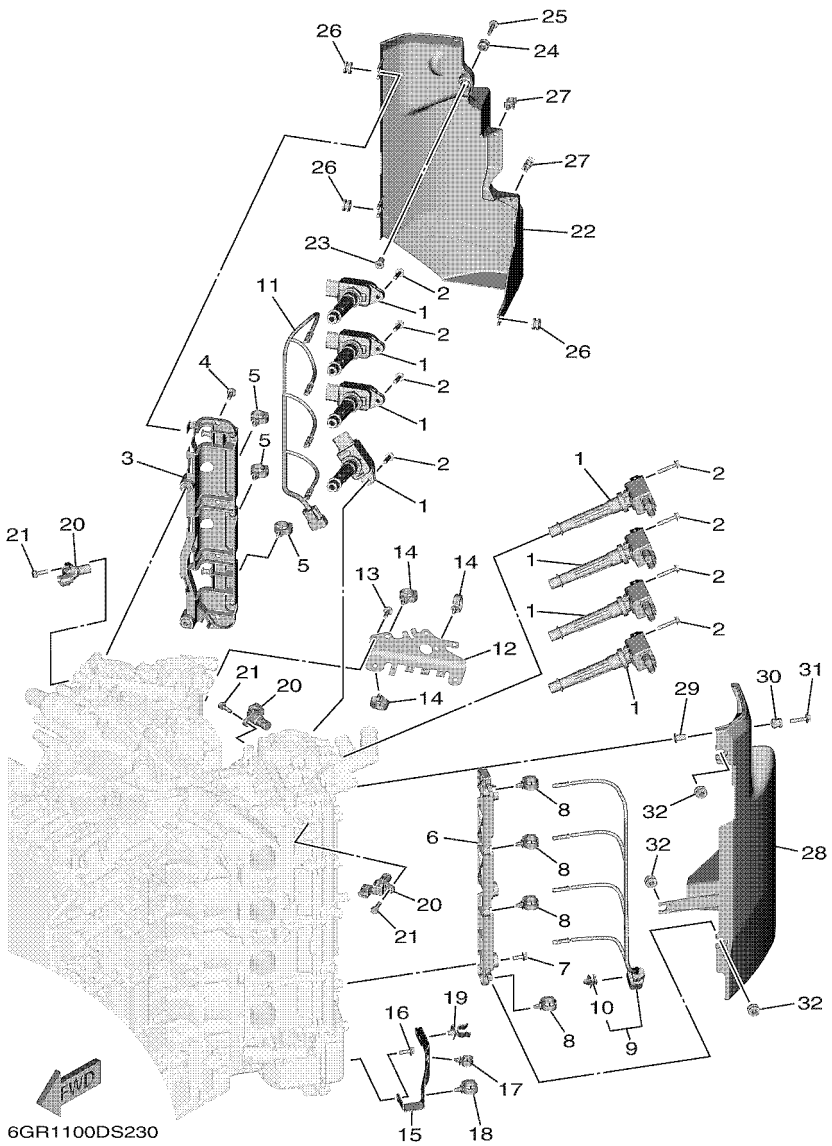

FIG. 23 ELECTRICAL 2

REF. NO.	PART NO.	DESCRIPTION	NSA	NSA2	NSA7			REMARKS
1	6GR–82310–00	IGNITION COIL ASSY	8	8	8			
2	90105–06028	BOLT, FLANGE	8	8	8			
3	6GR–8272F–00	PLATE, GUIDE 1	1	1	1			
4	95895–06016	BOLT, FLANGE	5	5	5			
5	90464–20181	CLAMP	3	3	3			
6	6GR–8272G–00	PLATE, GUIDE 2	1	1	1			
7	95895–06016	BOLT, FLANGE	3	3	3			
8	90464–20181	CLAMP	4	4	4			
9	6GR–82386–00	EXTENSION, WIRE HARNESS	1	1	1			
10	90464–09M47	.CLAMP	1	1	1			
11	6GR–82386–10	EXTENSION, WIRE HARNESS	1	1	1			
12	6GR–82388–00	PLATE	1	1	1			
13	95895–06016	BOLT, FLANGE	2	2	2			
14	90464–20181	CLAMP	3	3	3			
15	6GR–82389–00	PLATE 2	1	1	1			
16	95895–06016	BOLT, FLANGE	3	3	3			
17	90464–13249	CLAMP	1	1	1			
18	90464–20181	CLAMP	1	1	1			
19	90464–12015	CLAMP	1	1	1			
20	6GR–85896–00	SENSOR, CAM POSITION	3	3	3			
21	97595–06520	BOLT, WITH WASHER	3	3	3			
22	6GR–11186–00	COVER, CYLINDER HEAD SIDE 2	1	1	1			
23	90387–06119	COLLAR	1	1	1			
24	6A0–82317–00	DAMPER, IGNITION COIL	1	1	1			
25	95895–06025	BOLT, FLANGE	1	1	1			
26	90480–12314	GROMMET	3	3	3			
27	90464–09129	CLAMP	2	2	2			

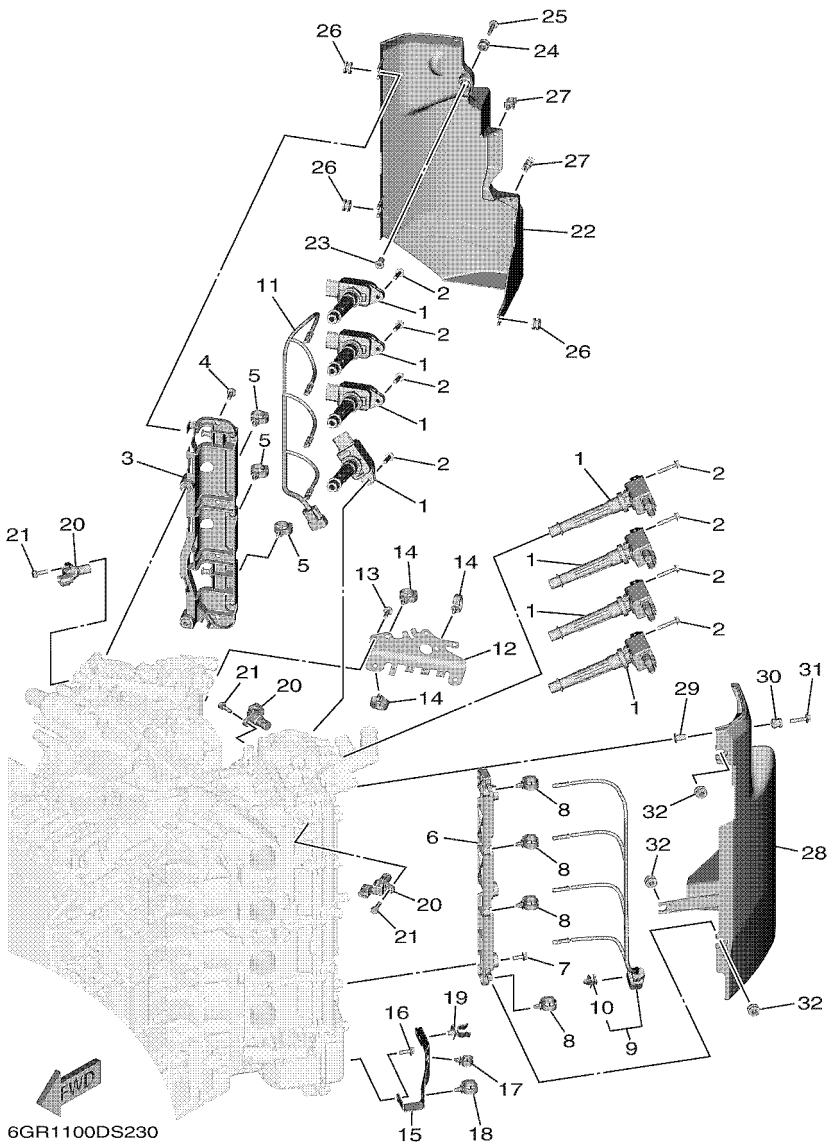

FIG. 23 ELECTRICAL 2

REF. NO.	PART NO.	DESCRIPTION	NSA	NSA2	NSA7			REMARKS
28	6GR–11187–00	COVER, CYLINDER HEAD SIDE 3	1	1	1			
29	90387–06119	COLLAR	1	1	1			
30	6A0–82317–00	DAMPER, IGNITION COIL	1	1	1			
31	95895–06025	BOLT, FLANGE	1	1	1			
32	90480–12314	GROMMET	3	3	3			

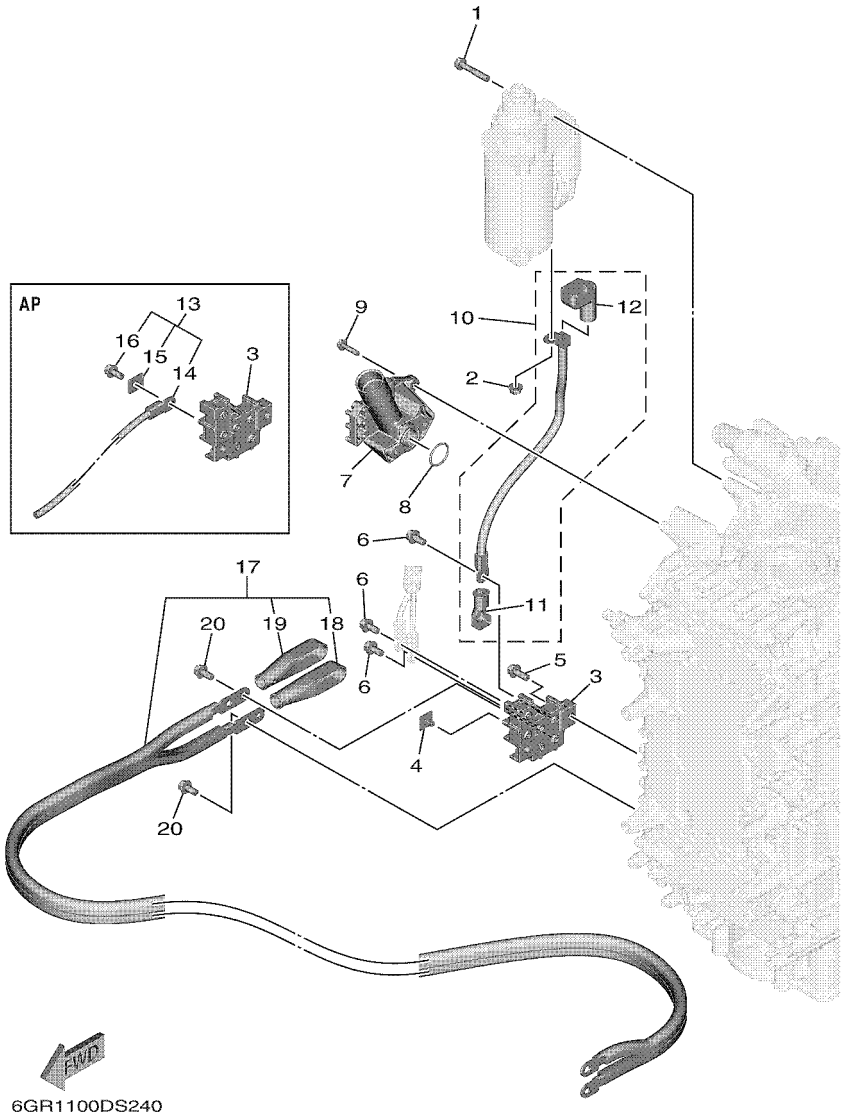

FIG. 24 ELECTRICAL 3

REF. NO.	PART NO.	DESCRIPTION	NSA	NSA2	NSA7			REMARKS
1	97513–08545	BOLT, WITH WASHER	3	3	3			
2	90179–08003	NUT	1	1	1			
3	6GR–81925–00	TERMINAL	1	1	1			
4	6GR–81916–00	COVER, TERMINAL	1	1	1			
5	95895–08020	BOLT, FLANGE	2	2	2			
6	95895–08016	BOLT, FLANGE	3	3	3			
7	6GR–81929–00–9S	BRACKET, TERMINAL	1	1	1			
8	93210–27370	O-RING	1	1	1			
9	95895–06025	BOLT, FLANGE	3	3	3			
10	6GR–82117–00	WIRE, LEAD	1	1	1			
11	6GR–82119–10	.COVER, LEAD WIRE	1	1	1			
12	6AW–82119–10	.COVER, LEAD WIRE	1	1	1			
13	6GR–762W0–00	WIRE HARNESS KIT	1	1	1			ASK TO MARINE DIV
14	6GR–81949–00	.WIRE, LEAD	1	1	1			
15	6P2–81923–00	.WASHER	1	1	1			
16	95895–08016	.BOLT, FLANGE	1	1	1			
17	6GR–82105–00	WIRE HARNESS	1	1	1			AP
18	6AW–82119–00	.COVER, LEAD WIRE	1	1	1			
19	6AW–82119–20	.COVER, LEAD WIRE	1	1	1			
20	95895–08016	BOLT, FLANGE	3	3	3			AP

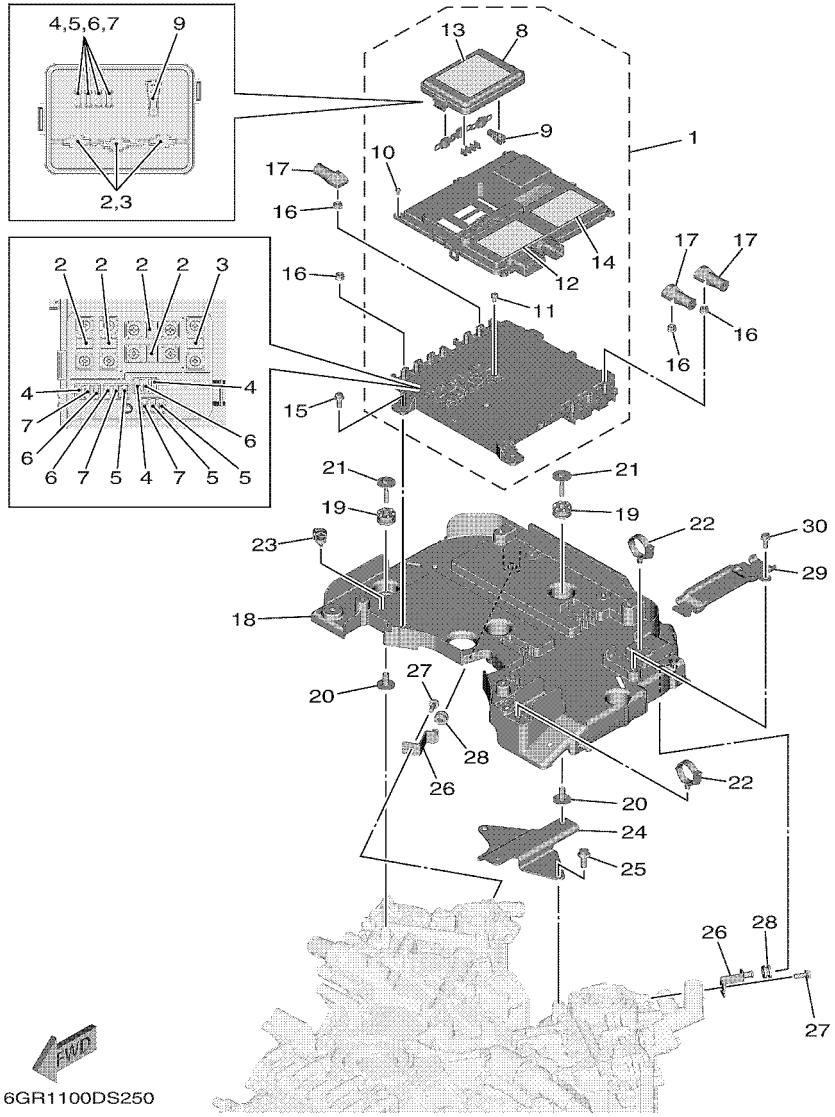

FIG. 25 ELECTRICAL 4

REF. NO.	PART NO.	DESCRIPTION	NSA	NSA2	NSA7			REMARKS
1	6GR–W85AA–00	ELECTRIC POWER MANAGEMENT UNIT	1	1	1			
2	6GR–82151–10	.FUSE (70A)	6	6	6			
3	6GR–82151–00	.FUSE (100A)	2	2	2			
4	6CB–82151–00	.FUSE (10A)	4	4	4			
5	6CB–82151–10	.FUSE (15A)	4	4	4			
6	6CB–82151–20	.FUSE (20A)	4	4	4			
7	6CB–82151–30	.FUSE (30A)	4	4	4			
8	6GR–85544–00	.CASE	1	1	1			
9	6CB–2812A–00	.PULLER, FUSE	1	1	1			
10	6P2–82113–00	.SCREW (M3)	7	7	7			
11	68F–82846–00	.SCREW, PAN HEAD (M5)	10	10	10			
12	6GR–81919–00	.GRAPHIC, REGULATOR	1	1	1			
13	6GR–81919–10	.GRAPHIC, REGULATOR	1	1	1			
14	6GR–81919–20	.GRAPHIC, REGULATOR	1	1	1			
15	95895–06016	BOLT, FLANGE	4	4	4			
16	95780–06500	NUT, FLANGE	10	10	10			
17	6GR–82119–00	COVER, LEAD WIRE	3	3	3			
18	6GR–82589–00	PROTECTER, WIRE HARNESS	1	1	1			
19	68F–85516–01	SPACER	4	4	4			
20	90387–06176	COLLAR	4	4	4			
21	68F–85119–00	BOLT	4	4	4			
22	90464–30001	CLAMP	2	2	2			
23	90464–13249	CLAMP	1	1	1			
24	6GR–82171–00	STAY, FUSE BOX	1	1	1			
25	95895–08020	BOLT, FLANGE	2	2	2			
26	6GR–8272U–00	PLATE, JOINT	2	2	2			
27	95895–06016	BOLT, FLANGE	2	2	2			

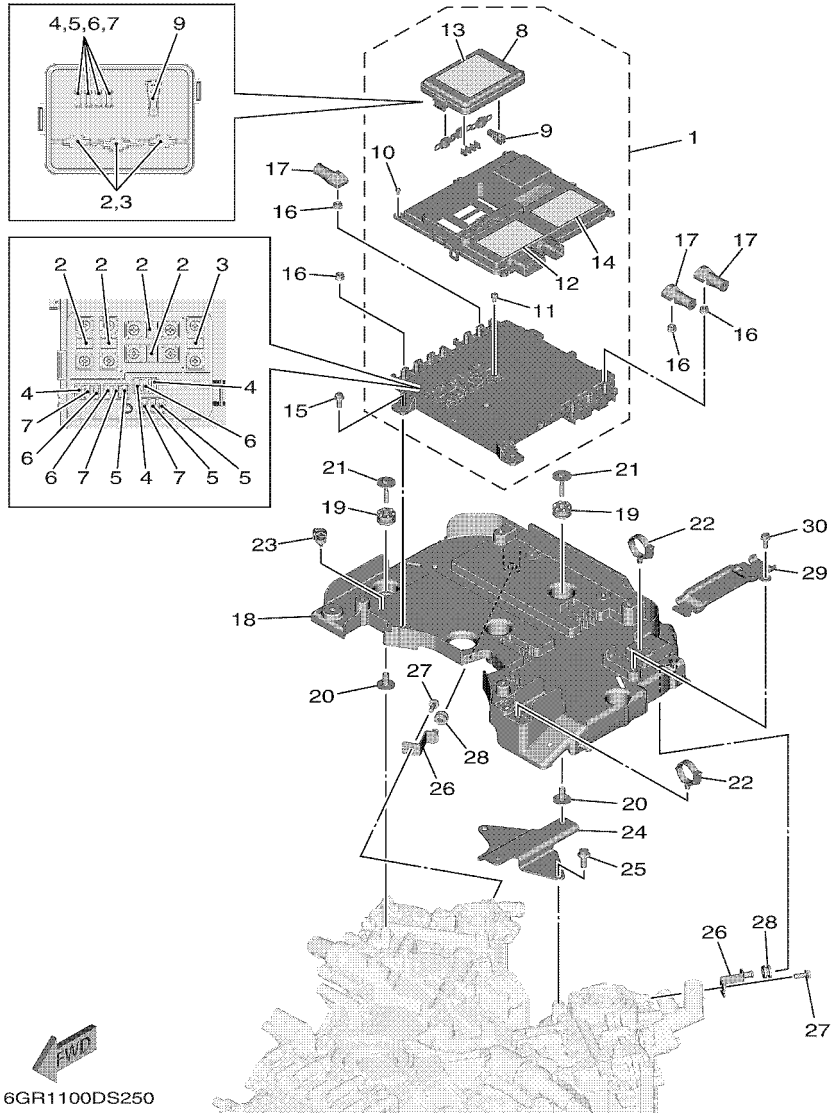

FIG. 25 ELECTRICAL 4

REF. NO.	PART NO.	DESCRIPTION	NSA	NSA2	NSA7			REMARKS
28	90480–12314	GROMMET	2	2	2			
29	6GR–85525–00	COVER	1	1	1			
30	95895–06016	BOLT, FLANGE	1	1	1			

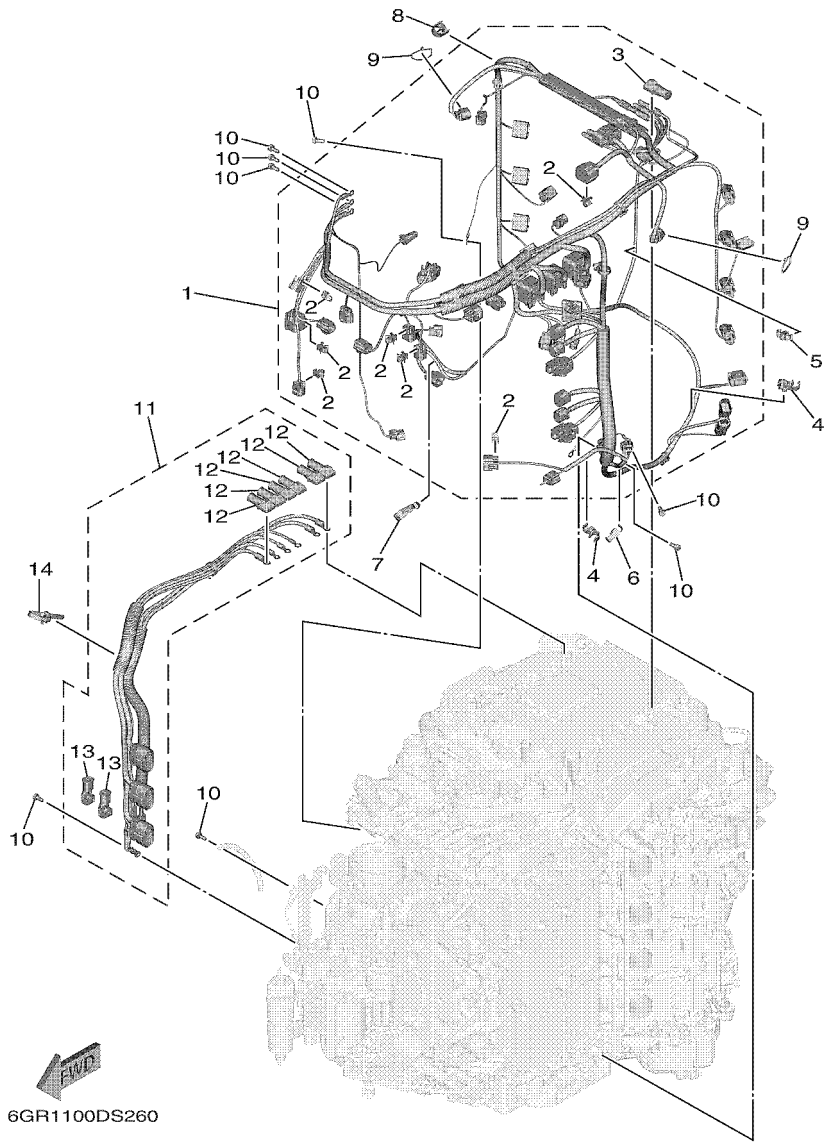

FIG. 26 ELECTRICAL 5

REF. NO.	PART NO.	DESCRIPTION	NSA	NSA2	NSA7			REMARKS
1	6GR–82590–00	WIRE HARNESS ASSY	1	1	1			
2	90464–09M47	.CLAMP	8	8	8			
3	6GR–82119–00	.COVER, LEAD WIRE	1	1	1			
4	90464–12012	CLAMP	2	2	2			
5	90464–09013	CLAMP	1	1	1			
6	90464–12010	CLAMP	1	1	1			
7	90465–13M24	CLAMP	1	1	1			
8	90464–18004	CLAMP	1	1	1			
9	90465–11M59	CLAMP	2	2	2			
10	97595–06516	BOLT, WITH WASHER	8	8	8			
11	6GR–8259M–00	WIRE HARNESS ASSY 2	1	1	1			
12	6GR–82119–00	.COVER, LEAD WIRE	6	6	6			
13	6GR–82119–10	.COVER, LEAD WIRE	2	2	2			
14	90464–44002	CLAMP	1	1	1			

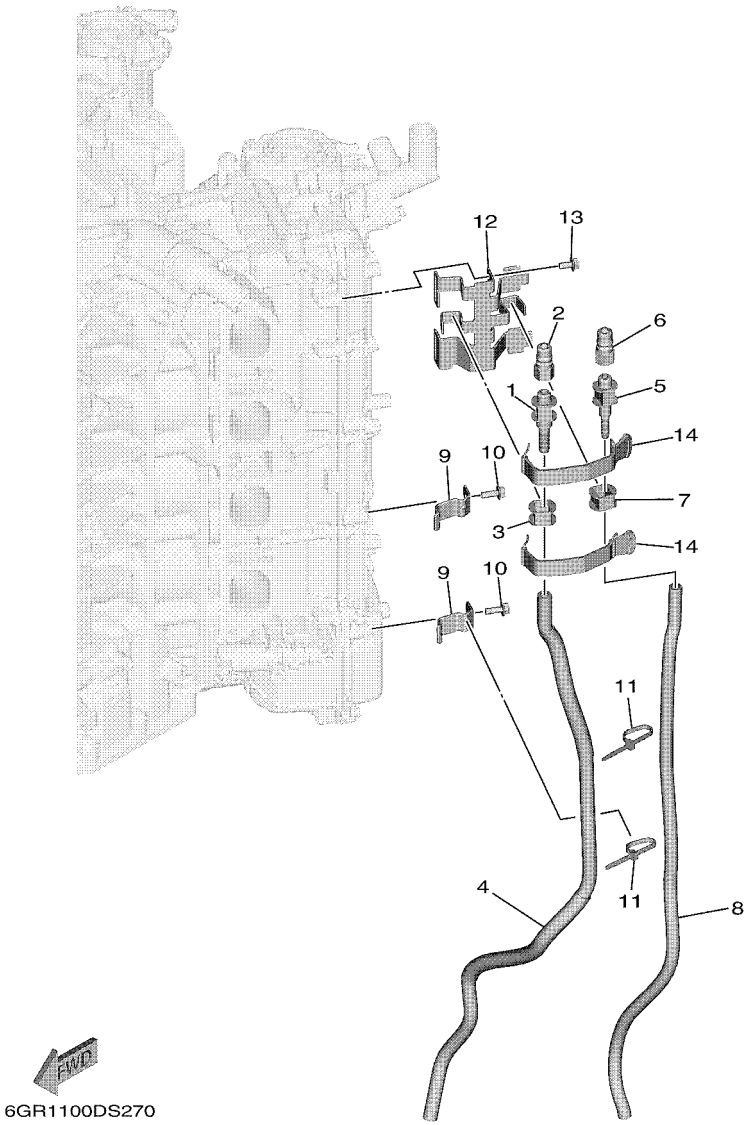

6GR1100DS270

FIG. 27 ELECTRICAL 6

REF. NO.	PART NO.	DESCRIPTION	NSA	NSA2	NSA7			REMARKS
1	6GR–45394–00	HOSE, FITTING 1	1	1	1			
2	6GR–45393–00	COUPLER	1	1	1			
3	6GR–81662–00	COVER, CONNECTER	1	1	1			
4	6GR–4383E–00	HOSE, OIL 2	1	1	1			
5	6GR–45395–00	HOSE, FITTING 2	1	1	1			
6	6GR–45393–00	COUPLER	1	1	1			
7	6GR–82599–00	COVER, CONNECTOR	1	1	1			
8	6GR–2318K–00	HOSE, AIR 2	1	1	1			
9	6GR–81443–00	CLAMP, LEAD 1	2	2	2			
10	95895–06016	BOLT, FLANGE	2	2	2			
11	90465–13M97	CLAMP	2	2	2			
12	6GR–81845–00	PLATE	1	1	1			
13	95895–06012	BOLT, FLANGE	2	2	2			
14	6GR–82131–00	BAND, BATTERY	2	2	2			

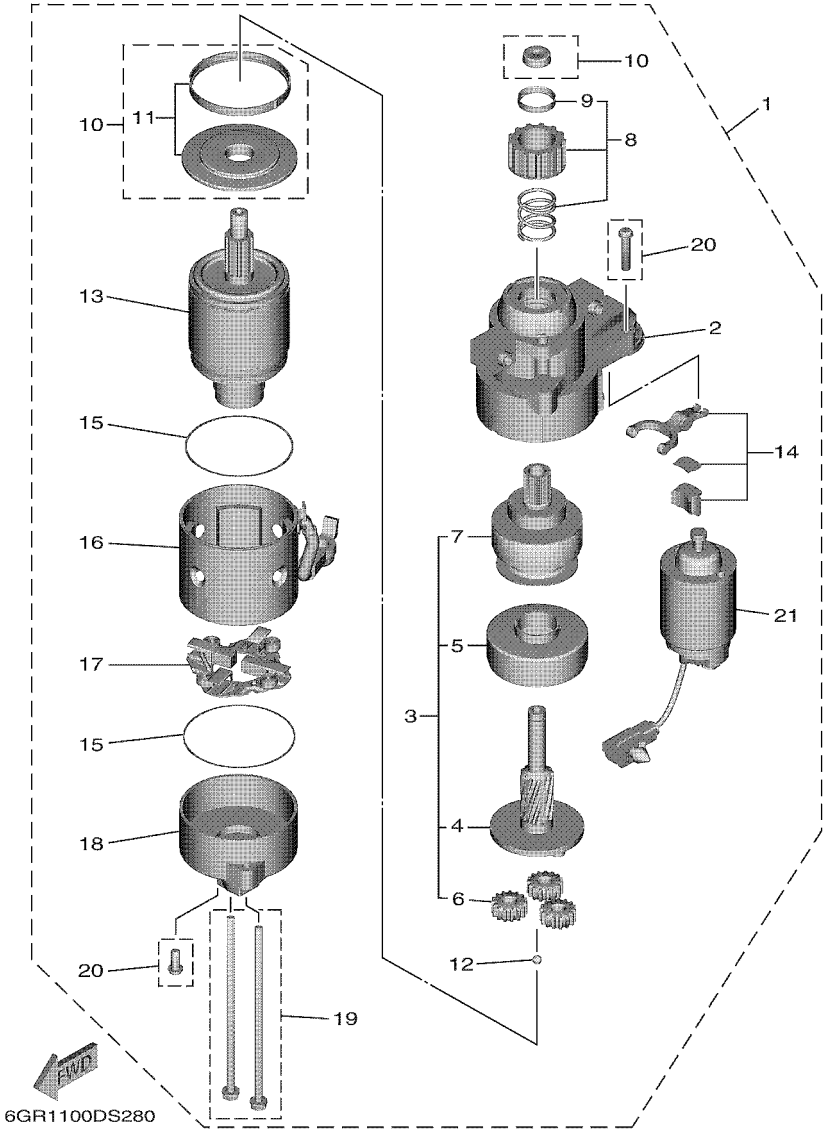

FIG. 28 STARTING MOTOR

REF. NO.	PART NO.	DESCRIPTION	NSA	NSA2	NSA7			REMARKS
1	6AW–81800–00	STARTING MOTOR ASSY	1	1	1			
2	6AW–81830–00	.FRONT BRACKET ASSY	1	1	1			
3	6AW–81807–00	.GEAR ASSY, STARTING MOTOR	1	1	1			
4	6AW–81836–00	..SHAFT, PINION	1	1	1			
5	6AW–81891–00	..GEAR, RING	1	1	1			
6	6AW–8183T–00	..GEAR, IDLER	3	3	3			
7	6AW–81832–00	..CLUTCH, OVER RUN	1	1	1			
8	6AW–81808–00	.PINION ASSY	1	1	1			
9	6AW–81857–00	..PINION STOPPER SET	1	1	1			
10	6AW–81862–00	.CAP	1	1	1			
11	6AW–8183R–00	..PACKING SET	1	1	1			
12	6AW–81854–00	.BALL, STEEL	1	1	1			
13	6AW–81850–00	.ARMATURE ASSY	1	1	1			
14	6AW–81839–00	.LEVER ASSY	1	1	1			
15	6AW–81842–00	.PACKING	2	2	2			
16	6AW–81810–00	.STATOR ASSY	1	1	1			
17	6AW–81840–00	.BRUSH HOLDER ASSY	1	1	1			
18	6AW–81820–00	.REAR BRACKET ASSY	1	1	1			
19	6AW–81826–00	.BOLT	1	1	1			
20	6AW–81846–00	.SCREW	1	1	1			
21	6AW–81941–00	.STARTER RELAY ASSY	1	1	1			

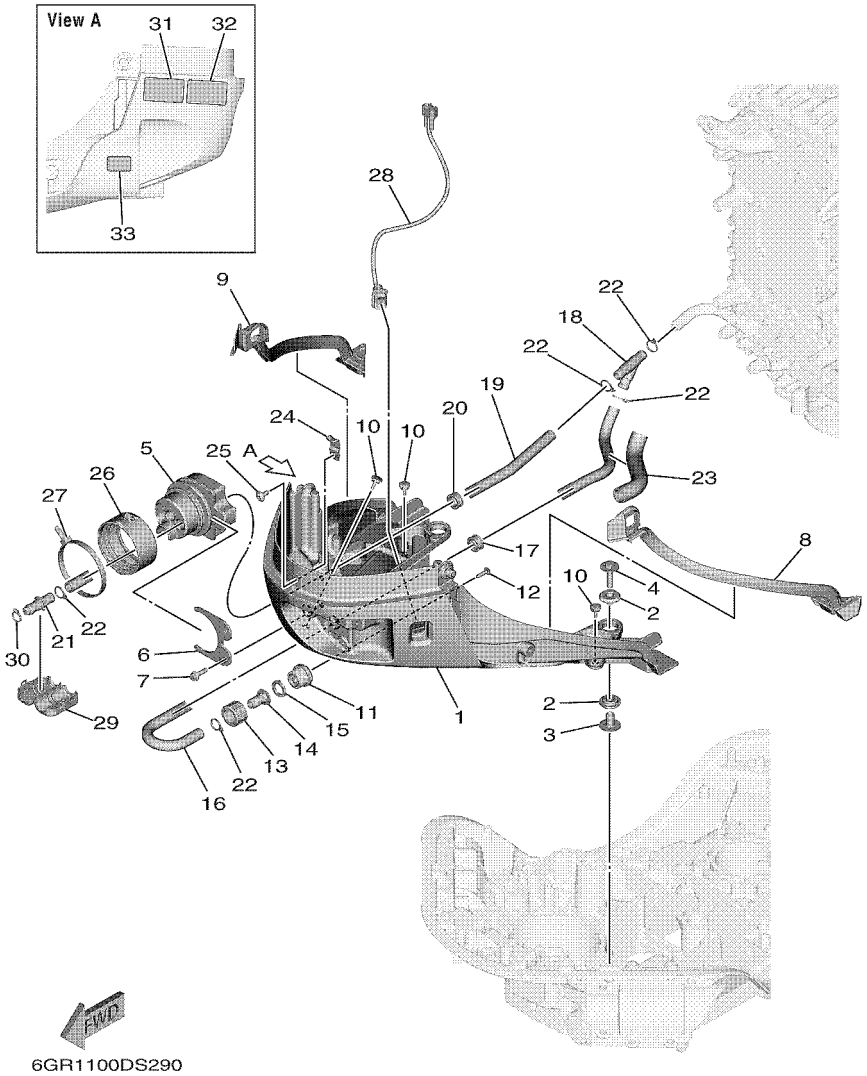

FIG. 29 BOTTOM COWLING 1

REF. NO.	PART NO.	DESCRIPTION	NSA	NSA2	NSA7			REMARKS
1	6GR–42711–00–8D	COWLING, BOTTOM 1	1					GRAY
	6GR–42711–00–CE	COWLING, BOTTOM 1		1	1			WHITE
2	90480–22M81	GROMMET	4	4	4			
3	90387–08M37	COLLAR	2	2	2			
4	90119–08M22	BOLT, WITH WASHER	2	2	2			
5	6GR–42725–00	GROMMET	1	1	1			
6	6GR–42761–00	STOPPER	1	1	1			
7	95895–06020	BOLT, FLANGE	2	2	2			
8	6GR–42717–00	RUBBER, SEAL 2	1	1	1			
9	6GR–42718–00	RUBBER, SEAL 3	1	1	1			
10	6H4–42748–00	GROMMET	3	3	3			
11	6R3–12572–00	ADAPTER	1	1	1			
12	90169–05M00	SCREW, TRUSS HEAD TAPPING	1	1	1			
13	6R3–12581–00	JOINT, HOSE 1	1	1	1			
14	6GR–12582–00	JOINT, HOSE 2	1	1	1			
15	6R3–12583–00	GASKET, HOSE JOINT	1	1	1			
16	6GR–12577–00	HOSE 2	1	1	1			
17	90480–20M05	GROMMET	1	1	1			
18	6GR–24378–00	PIPE, JOINT 3	1	1	1			
19	90445–16025	HOSE (L290)	1	1	1			
20	90480–20M05	GROMMET	1	1	1			
21	6GR–83558–00	END, NIPPLE	1	1	1			
22	90465–11M10	CLAMP	5	5	5			
23	90445–23003	HOSE (L150)	1	1	1			
24	6GR–44554–00	PLATE	1	1	1			
25	90111–06144	BOLT,HEX. SOCKET BUTTON	1	1	1			
26	6GR–42753–00	FASTNER	1	1	1			AP

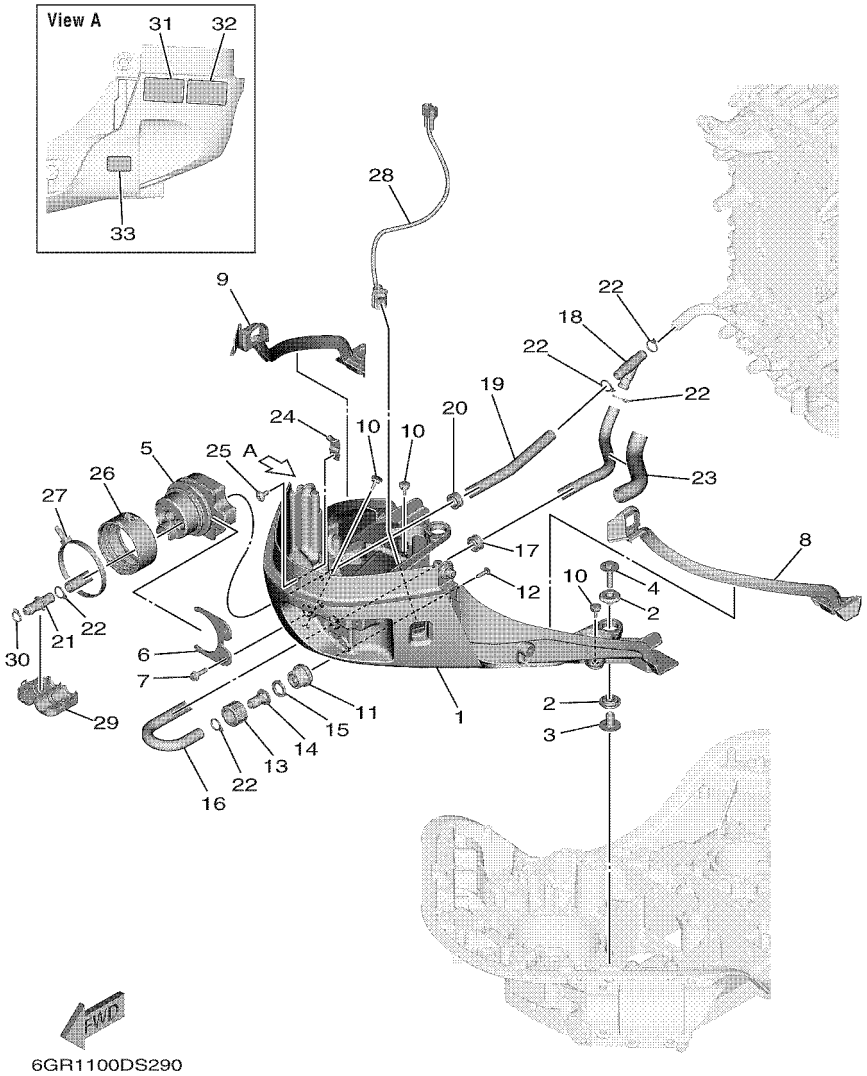

FIG. 29 BOTTOM COWLING 1

REF. NO.	PART NO.	DESCRIPTION	NSA	NSA2	NSA7			REMARKS
27	90464–99006	CLAMP	1	1	1			AP
28	6GR–82563–00	TRIM & TILT SWITCH ASSY	1	1	1			
29	6GR–24452–00	COVER	1	1	1			AP
30	90460–15227	CLAMP, HOSE	1	1	1			AP
31	6EE–42794–40	LABEL, WARNING (GENERAL)	1	1	1			
32	6EE–42794–50	LABEL, WARNING (GENERAL)	1	1	1			
33	6AH–81996–00	MARK	1	1	1			

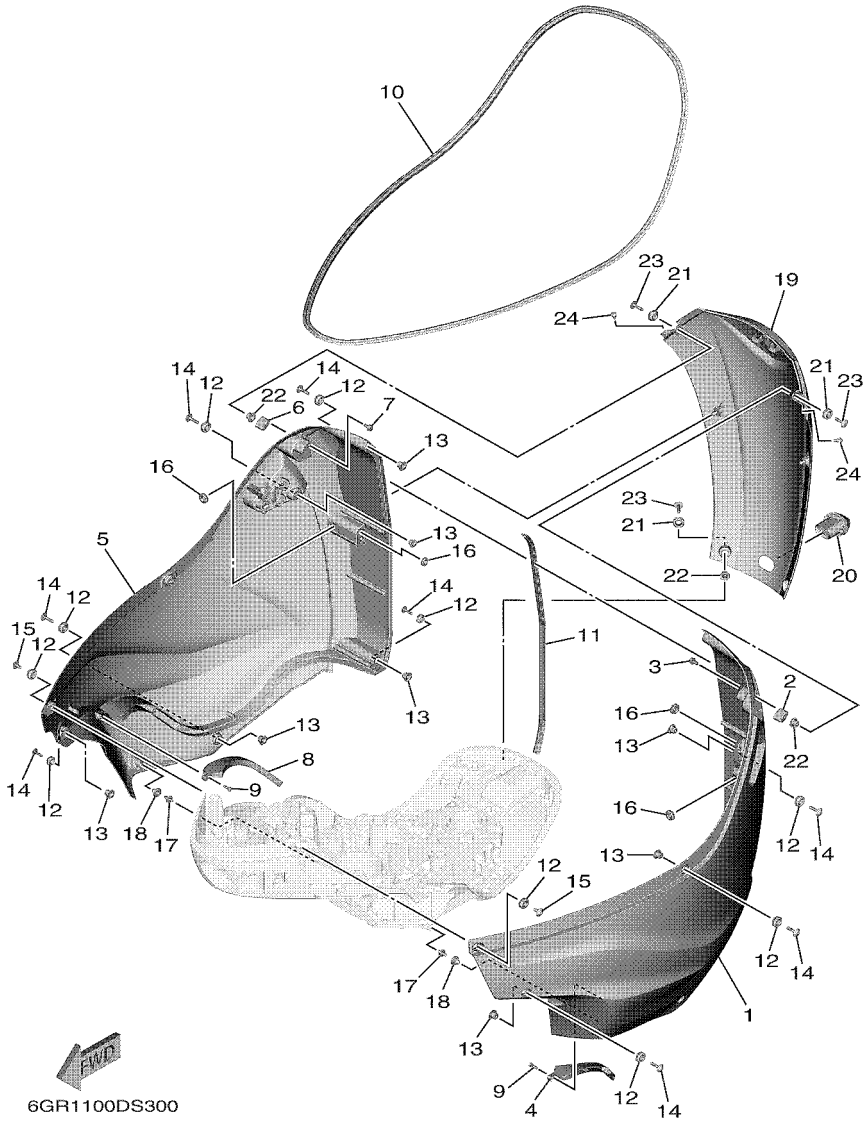

FIG. 30 BOTTOM COWLING 2

REF. NO.	PART NO.	DESCRIPTION	NSA	NSA2	NSA7			REMARKS
1	6GR–42712–00–8D	COWLING, BOTTOM 2	1					GRAY
	6GR–42712–00–CE	COWLING, BOTTOM 2		1				WHITE
	6GR–42712–00	COWLING, BOTTOM 2			1			
2	6GR–42744–00	STAY	1	1	1			
3	95895–06012	BOLT, FLANGE	2	2	2			
4	6GR–42622–00	DAMPER	1	1	1			
5	6GR–42713–00–8D	COWLING, BOTTOM 3	1					GRAY
	6GR–42713–00–CE	COWLING, BOTTOM 3		1				WHITE
	6GR–42713–00	COWLING, BOTTOM 3			1			
6	6GR–42744–00	STAY	1	1	1			
7	95895–06012	BOLT, FLANGE	2	2	2			
8	6GR–42623–00	SIDE, MOLE COWLING 2	1	1	1			
9	90167–05017	SCREW, TAPPING	4	4	4			
10	6GR–42615–00	SEAL	1	1	1			
11	6GR–42769–00	SEAL, RUBBER	1	1	1			
12	90480–16015	GROMMET	14	14	14			
13	6GR–42758–00	COLLAR	12	12	12			
14	90111–06175	BOLT,HEX. SOCKET BUTTON	12	12	12			
15	90111–06176	BOLT,HEX. SOCKET BUTTON	2	2	2			
16	90480–13034	GROMMET	4	4	4			
17	69J–42774–10	STAY, APRON 1	2	2	2			
18	6GR–42768–00	DAMPER	2	2	2			
19	6GR–42625–00–8D	PANEL, REAR	1					GRAY
	6GR–42625–00–CE	PANEL, REAR		1				WHITE
	6GR–42625–00	PANEL, REAR			1			
20	6GR–42748–00	GROMMET	1	1	1			
21	90480–16015	GROMMET	4	4	4			

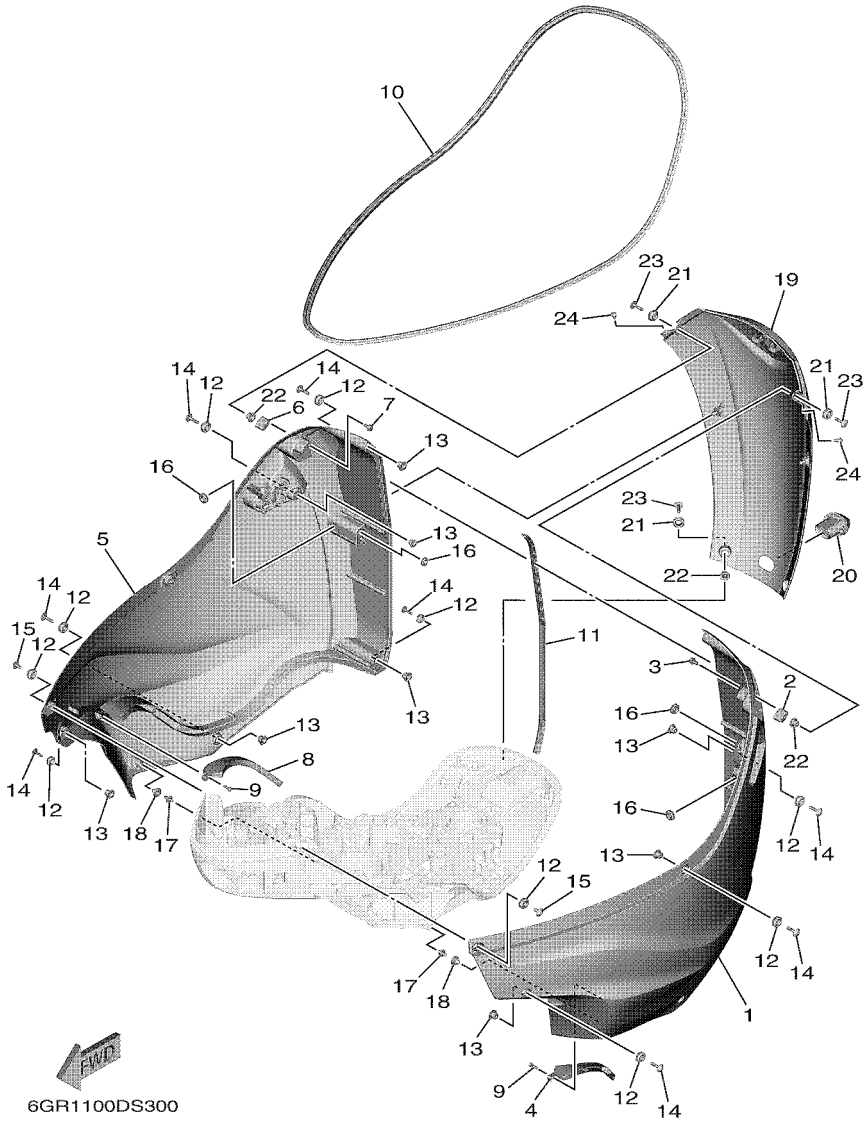

FIG. 30 BOTTOM COWLING 2

REF. NO.	PART NO.	DESCRIPTION	NSA	NSA2	NSA7			REMARKS
22	6GR–42758–00	COLLAR	4	4	4			
23	90111–06175	BOLT,HEX. SOCKET BUTTON	4	4	4			
24	90338–07012	PLUG	2	2	2			

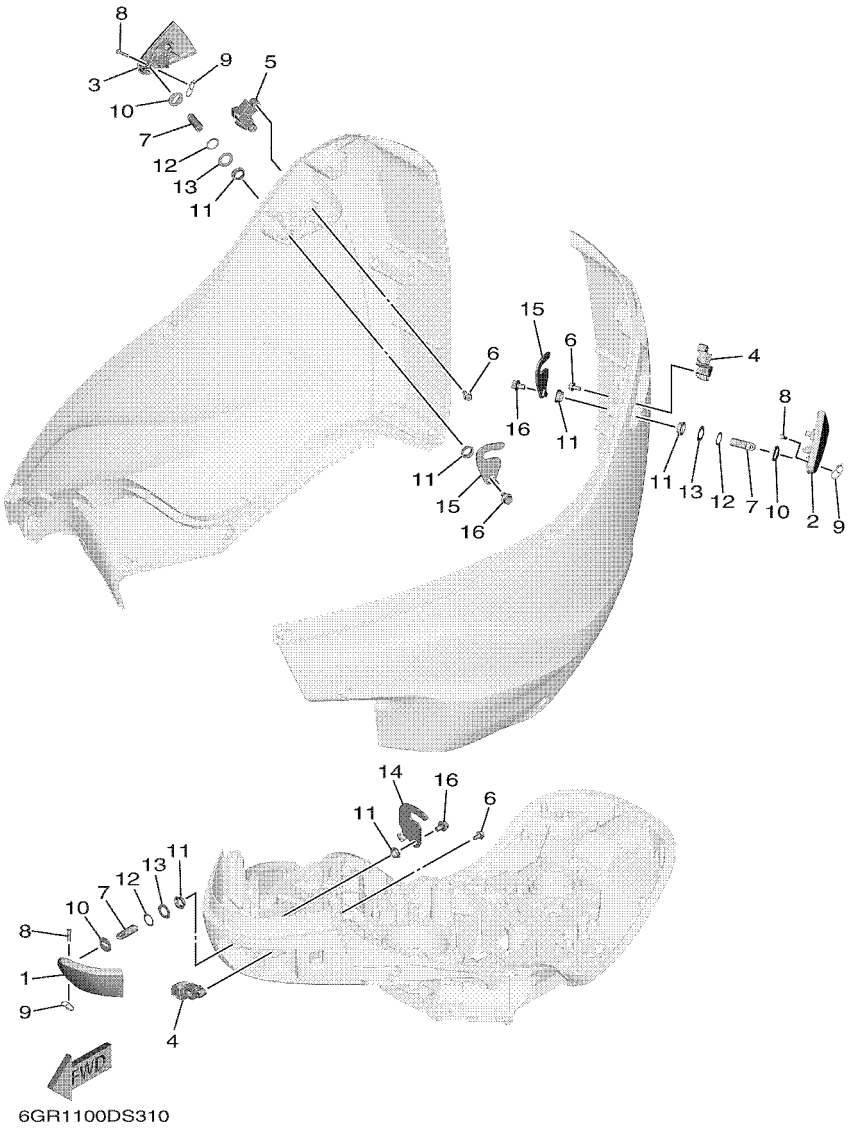

FIG. 31 BOTTOM COWLING 3

REF. NO.	PART NO.	DESCRIPTION	NSA	NSA2	NSA7			REMARKS
1	6GR–42815–00–8D	LEVER, CLAMP 1	1					GRAY
	6GR–42815–00–CE	LEVER, CLAMP 1		1				WHITE
	6GR–42815–00	LEVER, CLAMP 1			1			
2	6GR–42816–00–8D	LEVER, CLAMP 2	1					GRAY
	6GR–42816–00–CE	LEVER, CLAMP 2		1				WHITE
	6GR–42816–00	LEVER, CLAMP 2			1			
3	6GR–42817–00–8D	LEVER, CLAMP 3	1					GRAY
	6GR–42817–00–CE	LEVER, CLAMP 3		1				WHITE
	6GR–42817–00	LEVER, CLAMP 3			1			
4	6GR–42828–00	PLATE, CLAMP	2	2	2			
5	6GR–42829–00	PLATE, CLAMP 2	1	1	1			
6	95895–06012	BOLT, FLANGE	6	6	6			
7	6GR–42835–00	PIN, SET 1	3	3	3			
8	90240–05002	PIN, CLEVIS	3	3	3			
9	68T–42835–00	PIN, SET 1	3	3	3			
10	6GR–42833–00	WASHER, PLAIN	3	3	3			
11	90386–15M73	BUSH	6	6	6			
12	90206–15M18	WASHER, WAVE	3	3	3			
13	90201–156J2	WASHER, PLATE	3	3	3			
14	6GR–42818–00	LEVER, CLAMP 4	1	1	1			
15	6GR–42819–00	LEVER, CLAMP 5	2	2	2			
16	95895–08012	BOLT, FLANGE	3	3	3			

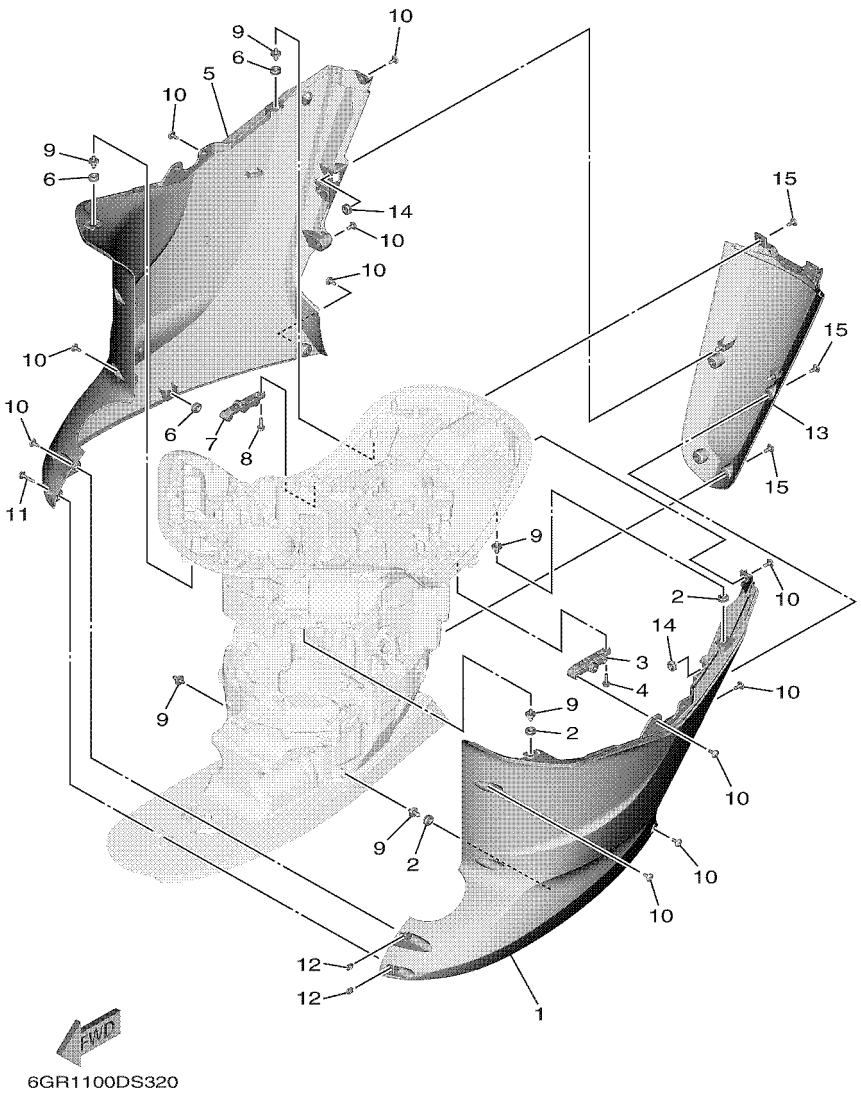

FIG. 32 BOTTOM COWLING 4

REF. NO.	PART NO.	DESCRIPTION	NSA	NSA2	NSA7			REMARKS
1	6GR–42740–00–8D	APRON COMPLETE 1	1					GRAY
	6GR–42740–00–CE	APRON COMPLETE 1		1				WHITE
	6GR–42740–00	APRON COMPLETE 1			1			
2	90480–14M17	GROMMET	3	3	3			
3	6GR–42774–00–CA	STAY, APRON 1	1	1	1			
4	95895–06020	BOLT, FLANGE	2	2	2			
5	6GR–42770–00–8D	APRON COMPLETE 2	1					GRAY
	6GR–42770–00–CE	APRON COMPLETE 2		1				WHITE
	6GR–42770–00	APRON COMPLETE 2			1			
6	90480–14M17	GROMMET	3	3	3			
7	6GR–42775–00–CA	STAY, APRON 2	1	1	1			
8	95895–06020	BOLT, FLANGE	2	2	2			
9	69J–42774–10	STAY, APRON 1	6	6	6			
10	90111–06144	BOLT,HEX. SOCKET BUTTON	15	15	15			
11	90111–06142	BOLT,HEX. SOCKET BUTTON	1	1	1			
12	90173–06001	NUT, SQUARE	2	2	2			
13	6GR–45141–00–8D	COVER, UPPER CASING	1					GRAY
	6GR–45141–00–CE	COVER, UPPER CASING		1				WHITE
	6GR–45141–00	COVER, UPPER CASING			1			
14	90480–14M17	GROMMET	2	2	2			
15	90111–06144	BOLT,HEX. SOCKET BUTTON	6	6	6			

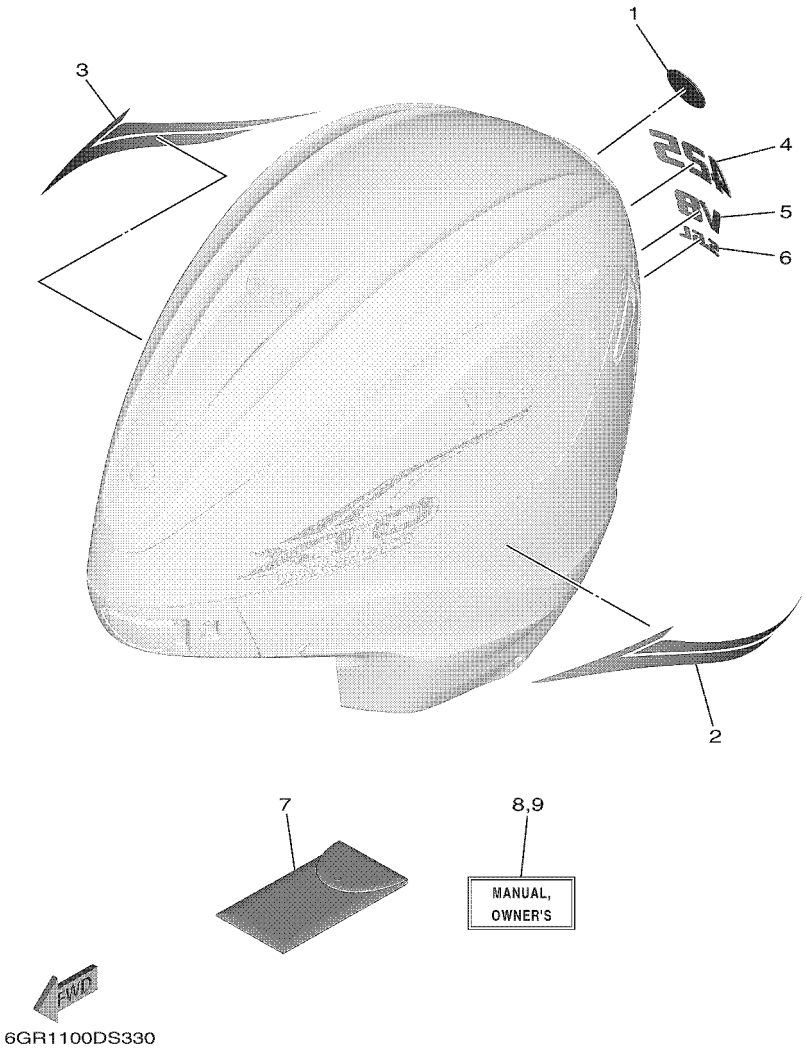

FIG. 33 GRAPHIC & TOOL

REF. NO.	PART NO.	DESCRIPTION	NSA	NSA2	NSA7			REMARKS
1	6AW–42697–10	TUNING FORK MARK	1	1				
2	6GR–42783–00	GRAPHIC, SIDE	1	1				
3	6GR–42784–00	GRAPHIC, SIDE	1	1				
4	6GR–4267A–10	GRAPHIC, REAR 2	1	1				
5	6GR–42678–00	GRAPHIC, REAR	1	1				
6	6GR–42682–00	MARK, COWLING	1	1				
7	6GR–28100–10	TOOL KIT	1	1	1			
8	6GR–28199–70–E0	MANUAL,OWNER'S	1	1	1			UR (E)
	6GR–28199–70–F0	MANUAL,OWNER'S	1	1	1			UR (F)
	6GR–28199–70–S0	MANUAL,OWNER'S	1	1	1			UR (ES)
	6GR–28199–70–G0	MANUAL,OWNER'S	1	1	1			UR (D)
	6GR–28199–70–D0	MANUAL,OWNER'S	1	1	1			UR (NL)
	6GR–28199–70–H0	MANUAL,OWNER'S	1	1	1			UR (I)
9	6GR–28199–80–K0	MANUAL,OWNER'S	1	1	1			UR (DK)
	6GR–28199–80–R0	MANUAL,OWNER'S	1	1	1			UR (GR)
	6GR–28199–80–P0	MANUAL,OWNER'S	1	1	1			UR (P)
	6GR–28199–80–N0	MANUAL,OWNER'S	1	1	1			UR (N)
	6GR–28199–80–M0	MANUAL,OWNER'S	1	1	1			UR (S)
	6GR–28199–80–L0	MANUAL,OWNER'S	1	1	1			UR (SF)

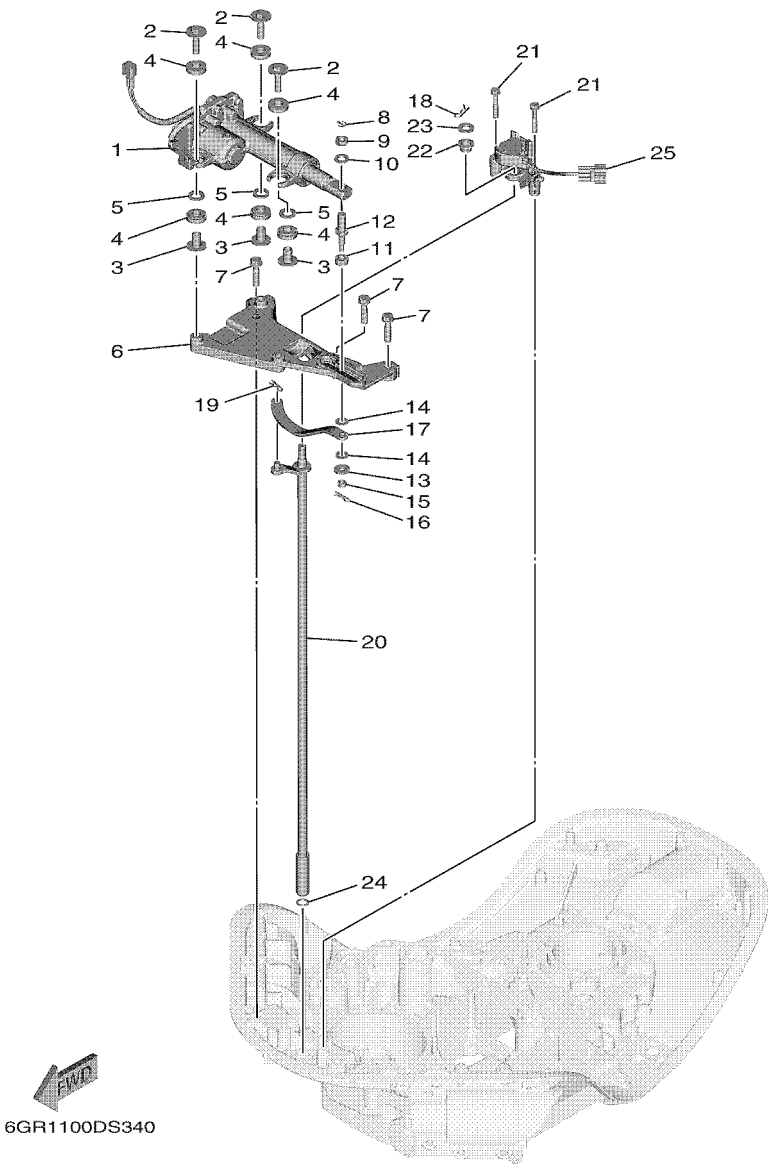

FIG. 34 CONTROL

REF. NO.	PART NO.	DESCRIPTION	NSA	NSA2	NSA7			REMARKS
1	6GR–4820A–00	ACTUATOR UNIT	1	1	1			
2	90119–08175	BOLT, WITH WASHER	3	3	3			
3	90387–08104	COLLAR	3	3	3			
4	6CE–85564–00	GROMMET	6	6	6			
5	90201–12064	WASHER, PLATE	3	3	3			
6	6GR–44117–00	BRACKET	1	1	1			
7	97575–08535	BOLT, WITH WASHER	3	3	3			
8	91490–20015	PIN. COTTER	1	1	1			
9	95380–10700	NUT	1	1	1			
10	90201–10048	WASHER, PLATE	1	1	1			
11	6CE–44122–00	BUSHING, SHIFT ROD LEVER	1	1	1			
12	6GR–42195–00	PIN, JOINT 1	1	1	1			
13	90201–06068	WASHER, PLATE	1	1	1			
14	90202–08M41	WASHER, PLATE	2	2	2			
15	90185–06M07	NUT, SELF-LOCKING	1	1	1			
16	90468–18008	CLIP	1	1	1			
17	6GR–44121–00	LEVER, SHIFT ROD	1	1	1			
18	90468–180A0	CLIP	1	1	1			
19	90468–18008	CLIP	1	1	1			
20	6GR–44120–00	HANDLE GEAR SHIFT ASSY	1	1	1			
21	97595–06540	BOLT, WITH WASHER	2	2	2			
22	90386–12M61	BUSH	1	1	1			
23	90201–10M63	WASHER, PLATE	1	1	1			
24	93210–11073	O-RING	1	1	1			
25	6GR–68303–00	SENSOR ASSY	1	1	1			

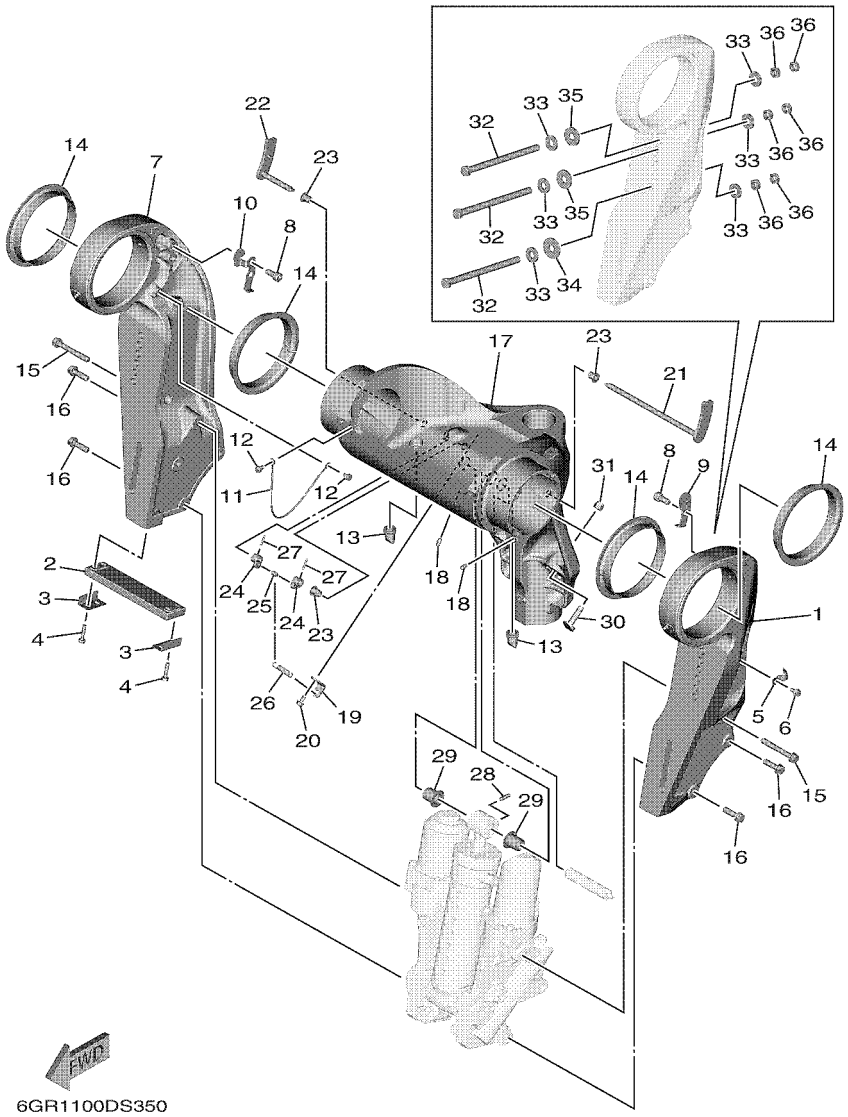

FIG. 35 BRACKET 1

REF. NO.	PART NO.	DESCRIPTION	NSA	NSA2	NSA7			REMARKS
1	6GR–4311A–00–8D	BRACKET, CLAMP 1, W/NIPPLE	1					GRAY
	6GR–4311A–00–CE	BRACKET, CLAMP 1, W/NIPPLE		1	1			WHITE
2	6AW–45251–00	ANODE	1	1	1			
3	6G5–44526–00	PLATE	2	2	2			
4	97595–06530	BOLT, WITH WASHER	4	4	4			
5	90465–08M63	CLAMP	1	1	1			
6	95895–06012	BOLT, FLANGE	1	1	1			
7	6GR–4311B–00–8D	BRACKET, CLAMP 2, W/NIPPLE	1					GRAY
	6GR–4311B–00–CE	BRACKET, CLAMP 2, W/NIPPLE		1	1			WHITE
8	91380–10020	BOLT	4	4	4			
9	6GR–4381E–00	BRACKET	1	1	1			
10	6GR–4381F–00	BRACKET	1	1	1			
11	6GR–82147–00	WIRE, LEAD 5	1	1	1			
12	97595–06510	BOLT, WITH WASHER	2	2	2			
13	61A–42717–00	RUBBER, SEAL 2	2	2	2			
14	6GR–43333–00	BUSH. , SWIVEL BRACKET	4	4	4			
15	90119–10064	BOLT, WITH WASHER	2	2	2			
16	90119–10040	BOLT, WITH WASHER	6	6	6			
17	6GR–43311–00–8D	BRACKET, SWIVEL 1	1					GRAY
	6GR–43311–00–CE	BRACKET, SWIVEL 1		1	1			WHITE
18	93700–06002	NIPPLE, GREASE	3	3	3			
19	6GR–43144–00	HOOK, SPRING	1	1	1			
20	95895–06012	BOLT, FLANGE	1	1	1			
21	6GR–43181–00	LEVER, TILT STOP 1	1	1	1			
22	6GR–43185–00	LEVER, TILT STOP 2	1	1	1			
23	90386–10M16	BUSH	3	3	3			
24	6G5–43148–00	COLLAR, DISTANCE	2	2	2			

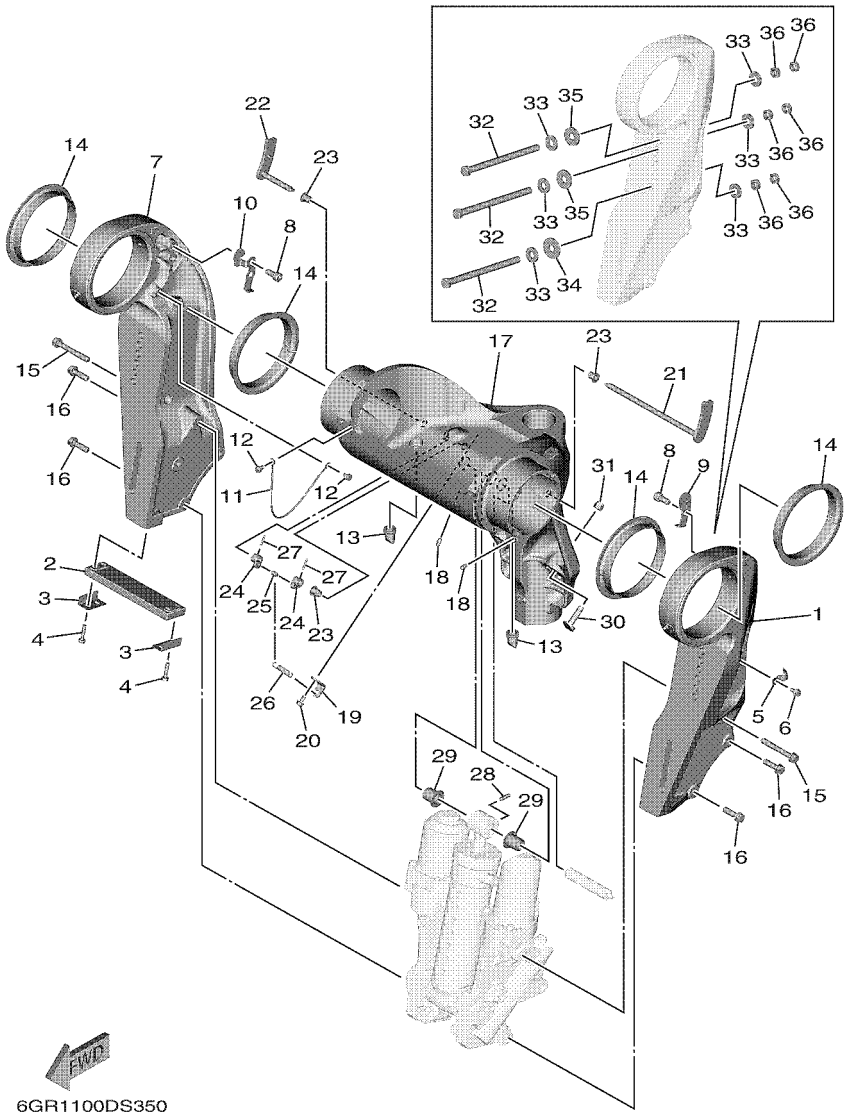

FIG. 35 BRACKET 1

REF. NO.	PART NO.	DESCRIPTION	NSA	NSA2	NSA7			REMARKS
25	90249–06M19	PIN	1	1	1			
26	90506–16010	SPRING, TENSION	1	1	1			
27	91690–30020	PIN, SPRING	2	2	2			
28	91690–60022	PIN, SPRING	1	1	1			
29	90386–20002	BUSH	2	2	2			
30	6GR–43376–00	BOLT, THRUST RECEIVER	2	2	2			
31	95780–10300	NUT, FLANGE	2	2	2			
32	90101–12054	BOLT (180MM)	6	6	6			
	90101–12053	BOLT (110MM)	2	2	2			AP
	90101–12031	BOLT (150MM)	2	2	2			AP
	90101–12036	BOLT (170MM)	2	2	2			AP
	90101–12054	BOLT (180MM)	2	2	2			AP
	90101–12055	BOLT (200MM)	2	2	2			AP
	90101–12056	BOLT (210MM)	2	2	2			AP
	90101–12057	BOLT (230MM)	2	2	2			AP
33	90201–12060	WASHER, PLATE	12	12	12			
34	90201–12426	WASHER, PLATE	2	2	2			
35	90201–13M19	WASHER, PLATE	4	4	4			
36	95380–12600	NUT	12	12	12			

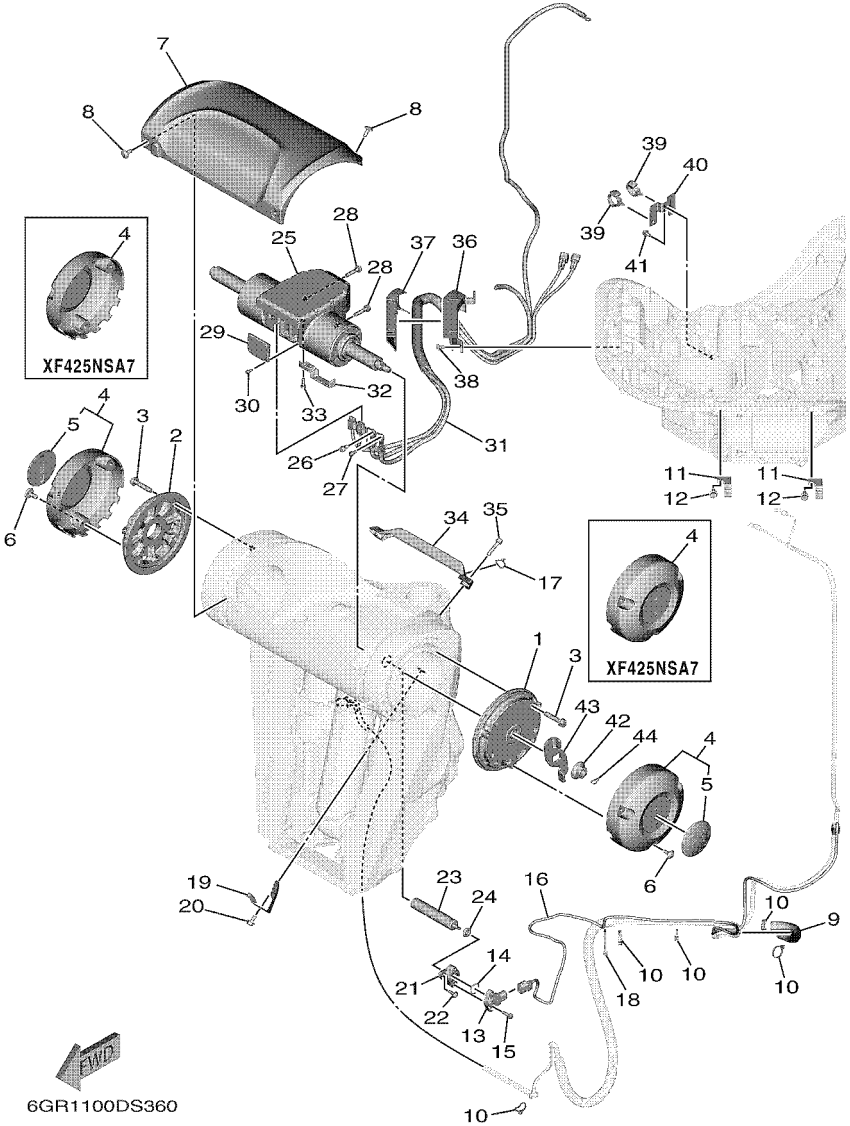

FIG. 36 BRACKET 2

REF. NO.	PART NO.	DESCRIPTION	NSA	NSA2	NSA7			REMARKS
1	6GR–43341–00	COVER, SWIVEL SODE 1	1	1	1			
2	6GR–43342–00	COVER, SWIVEL SODE 2	1	1	1			
3	90119–08176	BOLT, WITH WASHER	8	8	8			
4	6GR–W436G–00–8D	SBW SIDE COVER ASSY	2					GRAY
	6GR–W436G–00–CE	SBW SIDE COVER ASSY		2				WHITE
	6GR–43679–00	COVER			2			
5	6DA–42697–00	.TUNING FORK MARK	1	1				
6	90111–06144	BOLT,HEX. SOCKET BUTTON	6	6	6			
7	6GR–43318–00–8D	COVER	1					GRAY
	6GR–43318–00–CE	COVER		1				WHITE
	6GR–43318–00	COVER			1			
8	90111–06144	BOLT,HEX. SOCKET BUTTON	4	4	4			
9	6GR–24864–00	TUBE	1	1	1			
10	90465–11M10	CLAMP	5	5	5			
11	90462–10033	CLAMP	2	2	2			
12	95895–06012	BOLT, FLANGE	2	2	2			
13	6GR–85887–00	SENSOR ANGLE	1	1	1			
14	93210–17MF9	O-RING	1	1	1			
15	97595–05516	BOLT, WITH WASHER	2	2	2			
16	6GR–82553–00	EXTENSION, WIRE LEAD	1	1	1			
17	90465–11M10	CLAMP	1	1	1			
18	90464–55002	CLAMP	1	1	1			
19	6GR–4381J–00	PLATE	1	1	1			
20	95895–06012	BOLT, FLANGE	1	1	1			
21	6GR–4382A–00	ADAPTOR 1	1	1	1			
22	90149–05044	SCREW	2	2	2			
23	6GR–43126–00	PIN, UPPER SHOCK MOUNT	1	1	1			

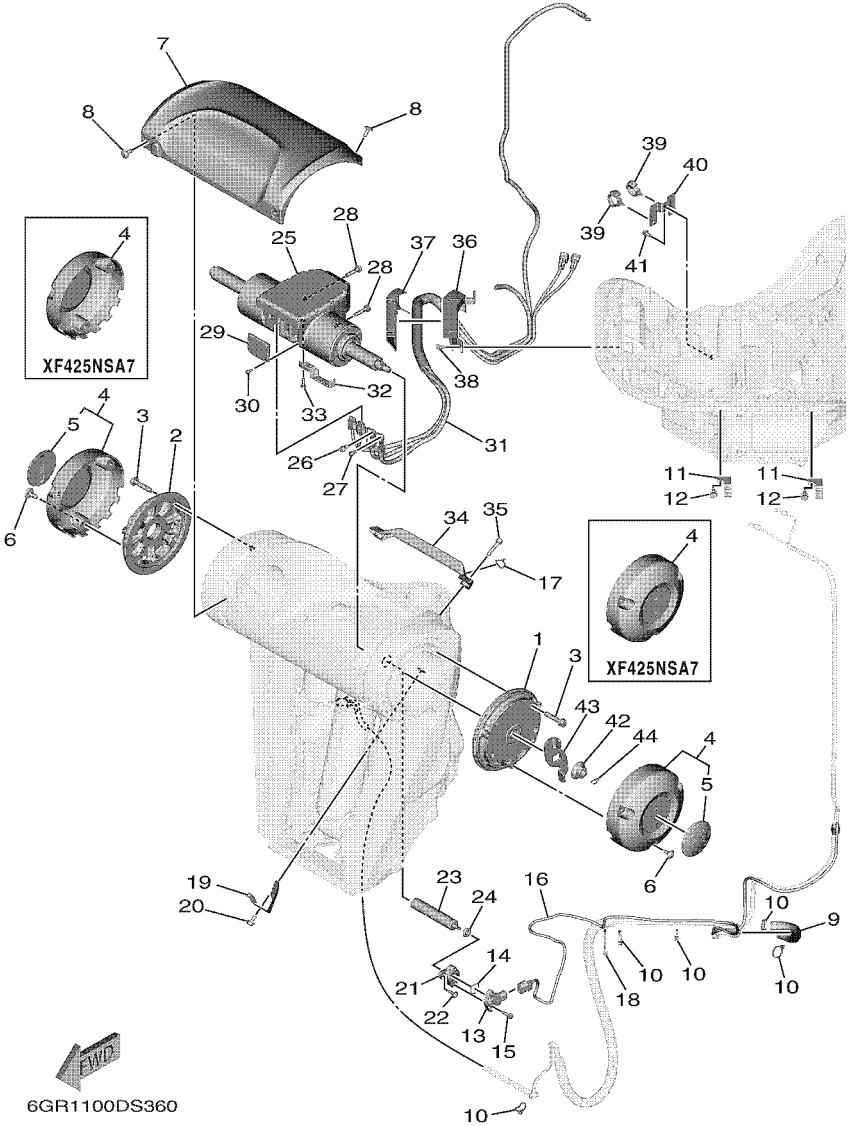

FIG. 36 BRACKET 2

REF. NO.	PART NO.	DESCRIPTION	NSA	NSA2	NSA7			REMARKS
24	93210–06ME6	O-RING	1	1	1			
25	6GR–42401–00	POWER STEERING CYLINDER ASSY	1	1	1			
26	6GR–44331–00	BOLT, 1	1	1	1			
27	6GR–44332–00	BOLT, 2	1	1	1			
28	97580–08535	BOLT, WITH WASHER	4	4	4			
29	6GR–42134–00	COVER	1	1	1			
30	91380–04010	BOLT	4	4	4			
31	6GR–438A0–00	STEERING, WIRE HARNESS ASSY	1	1	1			
32	6GR–48538–00	CLAMP, CABLE 1	1	1	1			
33	97095–06018	BOLT	2	2	2			
34	6GR–47716–00	COVER	1	1	1			
35	90110–06191	BOLT, HEXAGON SOCKET HEAD	2	2	2			
36	6GR–43121–00	PROTECTOR	1	1	1			
37	6GR–47445–00	PROTECTOR	1	1	1			
38	95895–06012	BOLT, FLANGE	2	2	2			
39	90464–12183	CLAMP	2	2	2			
40	6GR–48539–00	CLAMP, CABLE 2	1	1	1			
41	95895–06012	BOLT, FLANGE	1	1	1			
42	90179–14007	NUT	1	1	1			
43	6GR–43378–00	WASHER	1	1	1			
44	91490–20025	PIN. COTTER	1	1	1			

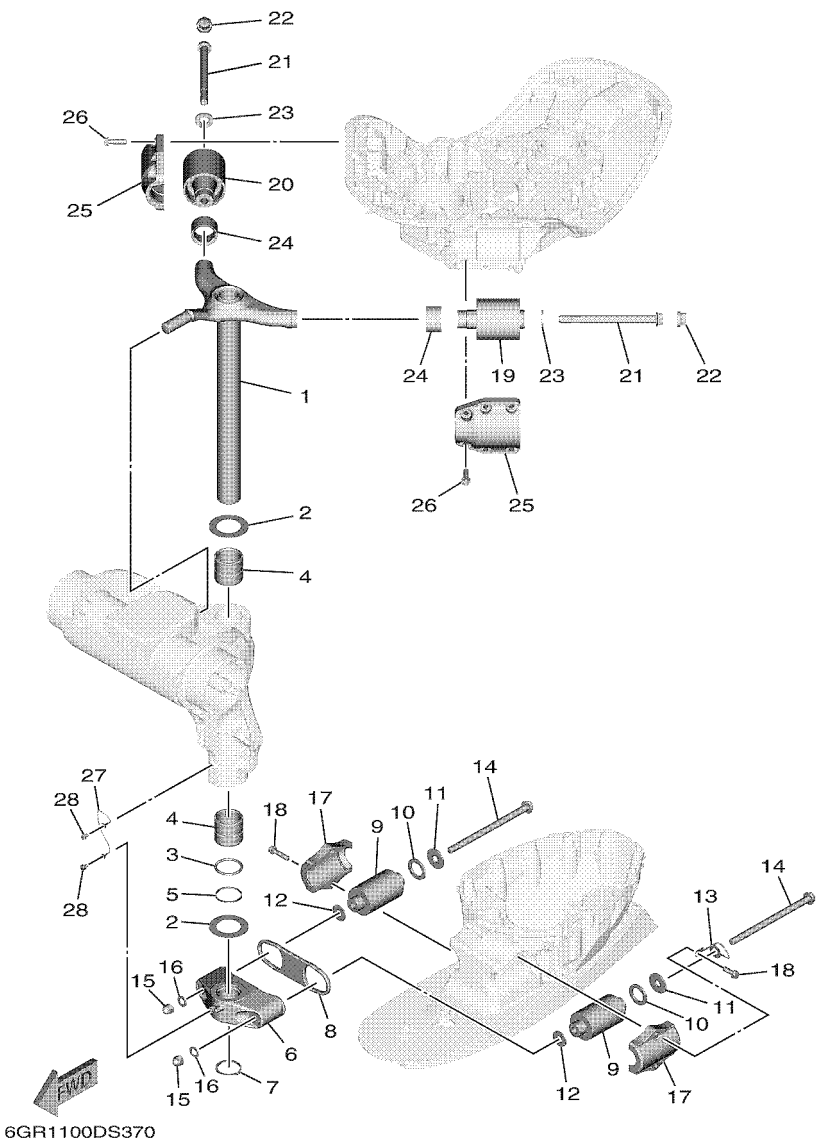

FIG. 37 BRACKET 3

REF. NO.	PART NO.	DESCRIPTION	NSA	NSA2	NSA7			REMARKS
1	6GR–42510–00–8D	STEERING BRACKET ASSY	1	1	1			
2	90201–51014	WASHER, PLATE	2	2	2			
3	93210–49003	O-RING	1	1	1			
4	90386–49001	BUSH	2	2	2			
5	90202–51001	WASHER, PLATE	1	1	1			
6	6GR–44551–00–CA	HOUSING, LOWER MOUNT RUBBER 1	1	1	1			
7	93410–46099	CIRCLIP	1	1	1			
8	6GR–44575–00	DAMPER, LOWER MOUNT RUBBER	1	1	1			
9	6AW–44555–00	MOUNT DAMPER, LOWER SIDE	2	2	2			
10	90202–32M19	WASHER, PLATE	2	2	2			
11	90201–16M55	WASHER, PLATE	2	2	2			
12	90201–15M58	WASHER, PLATE	2	2	2			
13	6GR–82149–00	WIRE, LEAD 3	1	1	1			
14	90105–14012	BOLT, FLANGE	2	2	2			
15	95380–14800	NUT	2	2	2			
16	92995–14600	WASHER	2	2	2			
17	6AW–44552–00–CA	HOUSING, LOWER MOUNT RUBBER 2	2	2	2			
18	90119–10024	BOLT, WITH WASHER	4	4	4			
19	6GR–44514–00	MOUNT DAMPER, UPPER SIDE	1	1	1			
20	6GR–44515–00	MOUNT RUBBER, UPPER SIDE	1	1	1			
21	90105–16004	BOLT, FLANGE	2	2	2			
22	6GR–44194–00	CAP	2	2	2			
23	90201–18030	WASHER, PLATE	2	2	2			
24	6GR–44533–00	DAMPER, UPPER MOUNT RUBBER	2	2	2			
25	6GR–44511–00–CA	COVER, UPPER MOUNT	2	2	2			
26	90119–10058	BOLT, WITH WASHER	12	12	12			
27	6T4–82117–00	WIRE, LEAD	1	1	1			

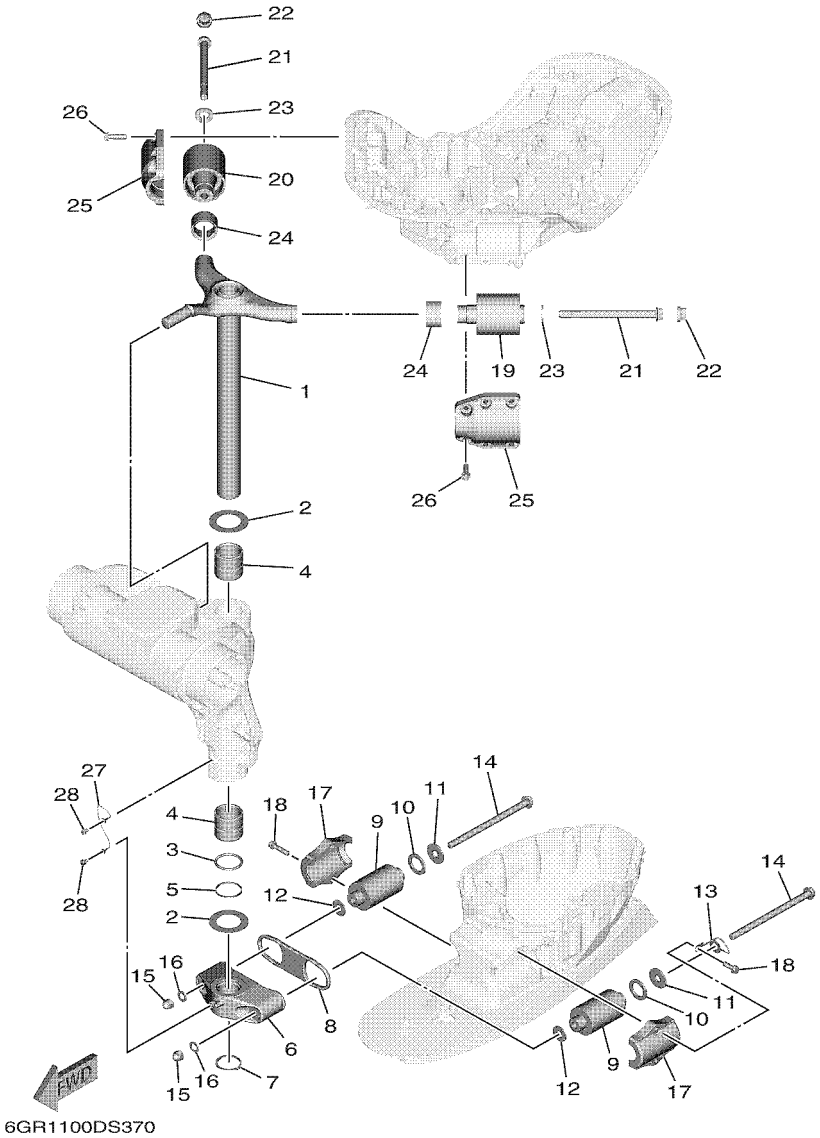

FIG. 37 BRACKET 3

REF. NO.	PART NO.	DESCRIPTION	NSA	NSA2	NSA7			REMARKS
28	97595–06510	BOLT, WITH WASHER	2	2	2			

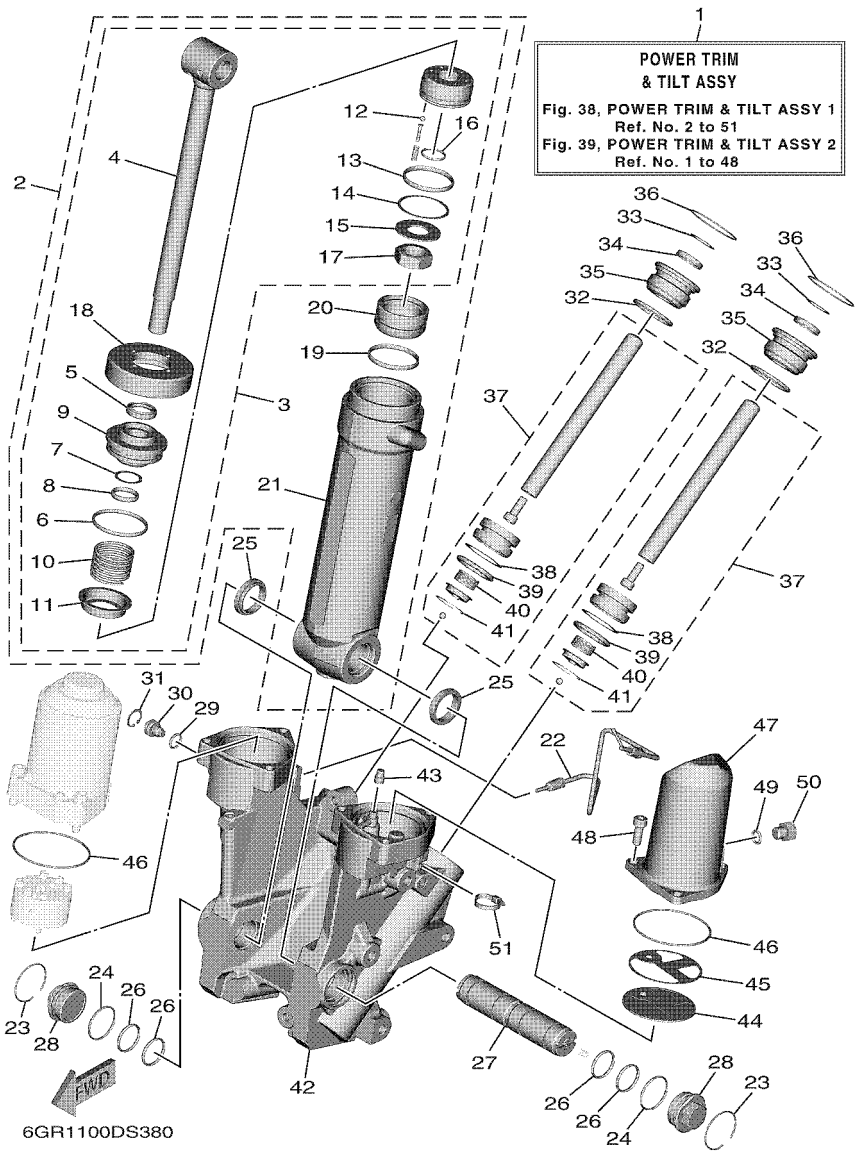

FIG. 38 POWER TRIM & TILT ASSY 1

REF. NO.	PART NO.	DESCRIPTION	NSA	NSA2	NSA7			REMARKS
1	6GR–43800–09	POWER TRIM & TILT ASSY	1	1	1			
2	6GR–43840–00	POWER TILT ASSY	1	1	1			
3	6GR–43810–00	.TILT PISTON SUB ASSY	1	1	1			
4	6GR–43801–00	..ROD	1	1	1			
5	6GR–43812–00	..SEAL, DUST	1	1	1			
6	93210–49046	..O-RING	1	1	1			
7	6GR–43872–00	..RING, BACK UP	1	1	1			
8	6GR–43863–00	..O-RING	1	1	1			
9	6GR–43811–00	..SCREW, CYLINDER END	1	1	1			
10	69J–4384H–00	..SPRING	1	1	1			
11	6GR–4382E–00	..ADAPTOR 2	1	1	1			
12	93505–32038	..BALL	4	4	4			
13	93210–44006	..O-RING	1	1	1			
14	6GR–43871–00	..RING, BACK UP	1	1	1			
15	90201–18029	..WASHER, PLATE	1	1	1			
16	93210–18397	..O-RING	1	1	1			
17	6GR–43654–00	..NUT 1	1	1	1			
18	6GR–43827–00	..RING SET	1	1	1			
19	93210–44006	.O-RING	1	1	1			
20	6GR–43814–00	.PISTON, FREE	1	1	1			
21	6GR–4380K–00	.CYLINDER, TILT SUB ASSY	1	1	1			
22	6GR–43835–00	PIPE	1	1	1			
23	93450–42110	CIRCLIP	2	2	2			
24	6GR–43862–00	O-RING	2	2	2			
25	6GR–4388F–00	SPACER	2	2	2			
26	93210–26130	O-RING	4	4	4			
27	6GR–43818–00	PIN, LOWER SHOCK MOUNT	1	1	1			

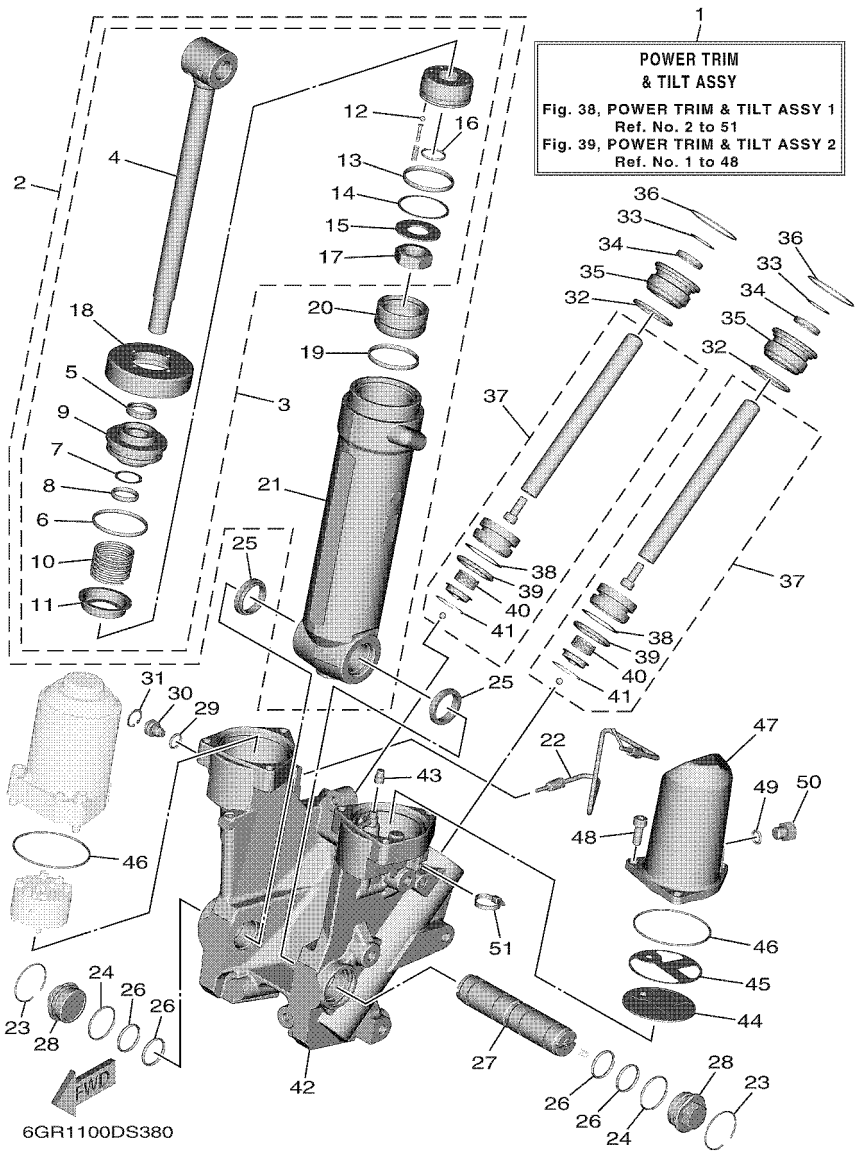

FIG. 38 POWER TRIM & TILT ASSY 1

REF. NO.	PART NO.	DESCRIPTION	NSA	NSA2	NSA7			REMARKS
28	6GR–22472–00	CAP, CASE	2	2	2			
29	93210–12327	O-RING	1	1	1			
30	6GR–43845–00	SCREW, MANUAL RELEASE	1	1	1			
31	61A–43876–00	RING, SNAP	1	1	1			
32	61A–43861–00	O-RING	2	2	2			
33	6T4–43875–01	RING, SNAP	2	2	2			
34	69J–43822–00	SEAL, TRIM DUST	2	2	2			
35	61A–43821–01	SCREW, TRIM CYLINDER END	2	2	2			
36	93440–52N50	CIRCLIP	2	2	2			
37	6GR–43820–00	TRIM PISTON SUB ASSY	2	2	2			
38	61A–43874–00	.RING, BACK UP	1	1	1			
39	61A–43864–00	.O-RING	1	1	1			
40	61A–4384H–10	.SPRING	1	1	1			
41	61A–43875–10	.RING, SNAP	1	1	1			
42	6GR–4380L–00	HOUSING, TRIM & TILT SUB ASSY	1	1	1			
43	6GR–4388H–00	PLUG	1	1	1			
44	69J–43817–00	FILTER 2	1	1	1			
45	69J–4388F–00	SPACER	1	1	1			
46	93210–66001	O-RING	2	2	2			
47	6GR–43828–00	BODY, RESERVOIR	1	1	1			
48	69J–43888–00	BOLT, SOCKET	3	3	3			
49	93210–09165	O-RING	1	1	1			
50	6EK–43829–00	PLUG, RESERVOIR	1	1	1			
51	90465–11M10	CLAMP	1	1	1			

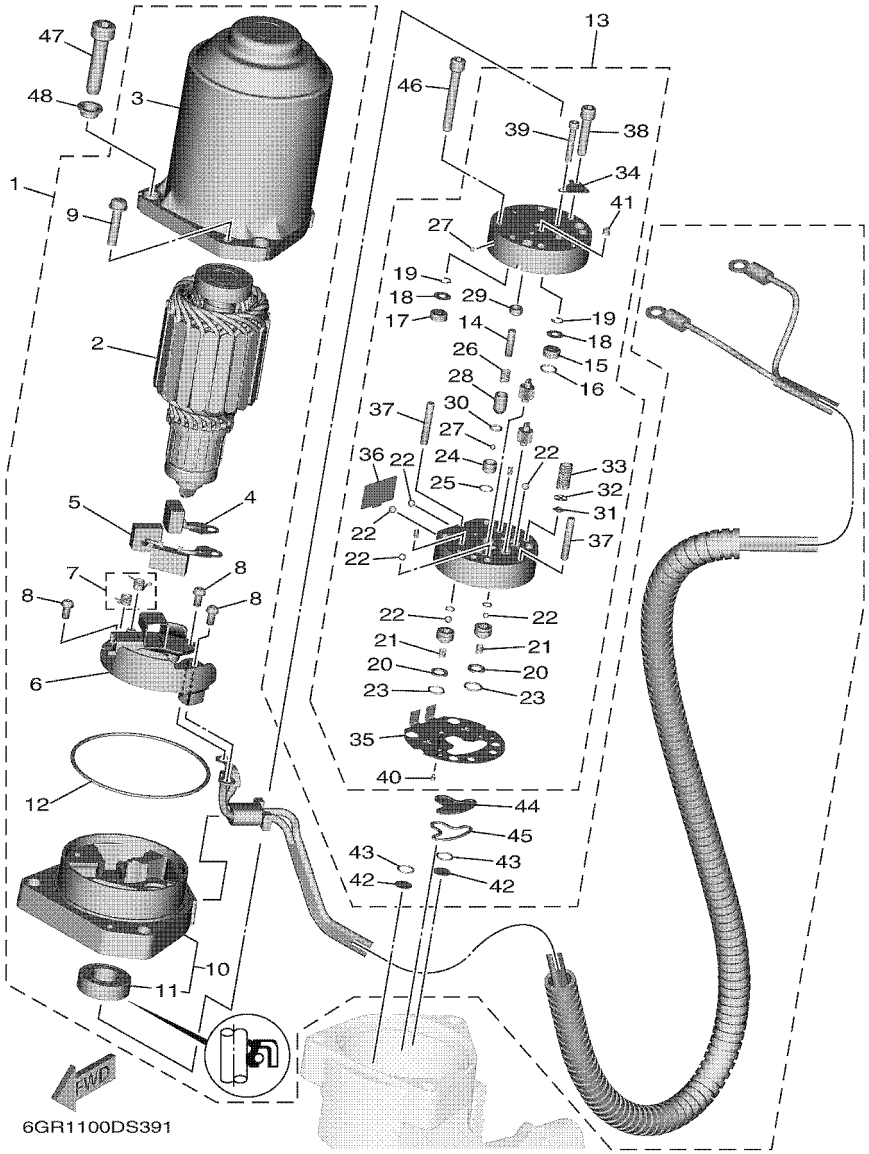

FIG. 39 POWER TRIM & TILT ASSY 2

REF. NO.	PART NO.	DESCRIPTION	NSA	NSA2	NSA7			REMARKS
1	6GR–43880–00	MOTOR ASSY	1	1	1			
2	6GR–43805–00	.ARMATURE ASSY	1	1	1			
3	6GR–43804–00	.STATOR ASSY	1	1	1			
4	6GR–43892–00	.BRUSH 2	1	1	1			
5	6GR–82181–00	.CIRCUIT BREAKER COMP.	1	1	1			
6	6GR–4380F–00	.PLATE, BRUSH HOLDER	1	1	1			
7	6GR–4386K–00	.SPRING, BRUSH	1	1	1			
8	97602–04310	.SCREW, PAN HEAD WITH WASHER	4	4	4			
9	67C–43879–10	.SCREW, WITH WASHER	2	2	2			
10	6GR–43881–00	.FRAME, END	1	1	1			
11	6GR–43882–00	..OIL SEAL	1	1	1			
12	6GR–43864–00	.O-RING	1	1	1			
13	6GR–43830–00	GEAR PUMP ASSY	1	1	1			
14	93603–08072	.PIN, DOWEL	1	1	1			
15	6CJ–43841–00	.PISTON, SHUTTLE	1	1	1			
16	6H1–43883–00	.O-RING	1	1	1			
17	6CJ–4384M–00	.PISTON, SHUTTLE 2	1	1	1			
18	69A–4384F–00	.SEAL, MAIN VALVE	2	2	2			
19	99002–03600	.CIRCLIP	2	2	2			
20	6C6–4387G–00	.WASHER	2	2	2			
21	6C6–43853–00	.SPRING, MAIN VALVE	2	2	2			
22	93505–32038	.BALL	6	6	6			
23	69J–4389J–00	.O-RING	2	2	2			
24	6GR–43851–00	.SEAT, RELIEF VALVE	1	1	1			
25	93210–064A5	.O-RING	1	1	1			
26	6C5–43855–10	.SPRING, UP RELIEF	1	1	1			
27	93501–08001	.BALL	2	2	2			

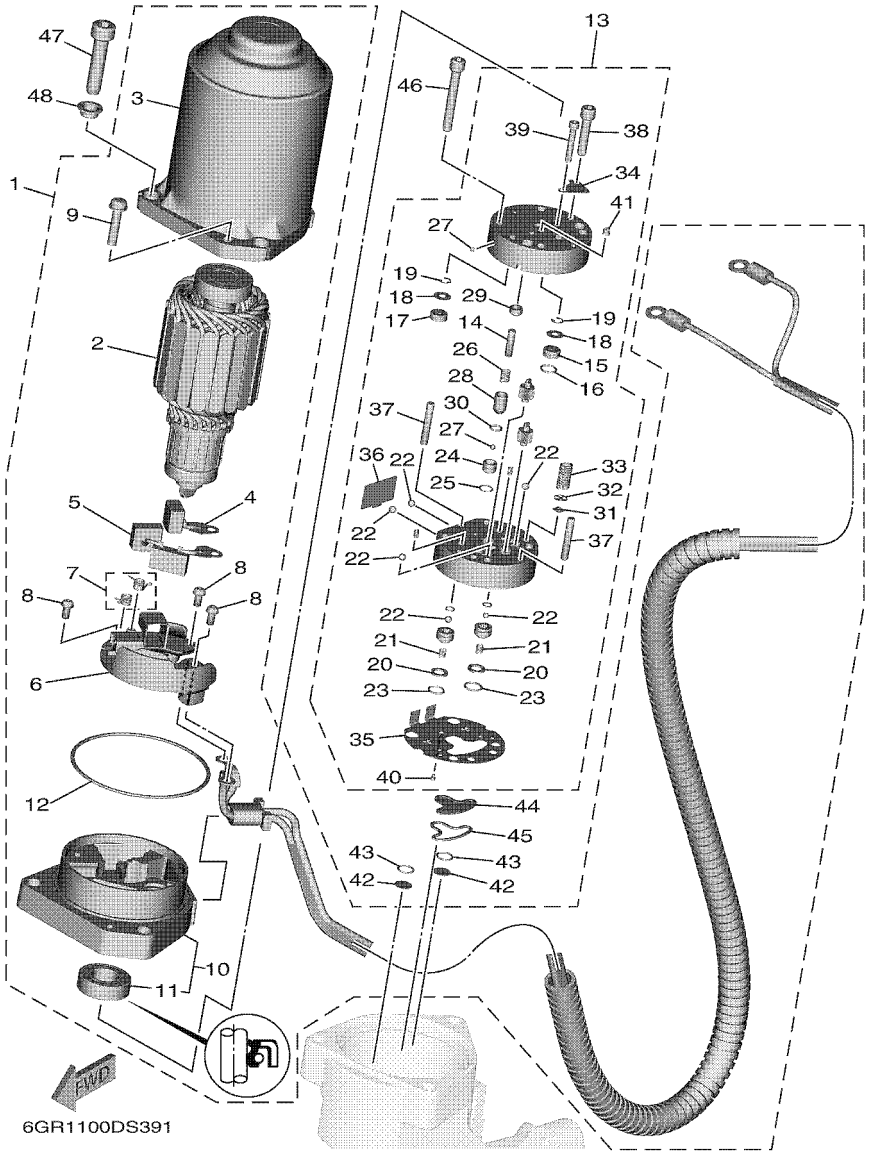

FIG. 39 POWER TRIM & TILT ASSY 2

REF. NO.	PART NO.	DESCRIPTION	NSA	NSA2	NSA7			REMARKS
28	6D8–43844–00	.PIN, VALVE SUPPORT	1	1	1			
29	6D8–43843–00	.SCREW, VALVE LOCK	1	1	1			
30	93210–04N51	.O-RING	1	1	1			
31	6H1–4384G–11	.SEAL, RELIEF VALVE	1	1	1			
32	6H1–43844–10	.PIN, VALVE SUPPORT	1	1	1			
33	6GR–43856–00	.SPRING, DOWN RELIEF	1	1	1			
34	6D8–4382L–00	.CAP, RELIEF VALVE	1	1	1			
35	6GR–43895–00	.SEAT, RELIEF VALVE	1	1	1			
36	6C5–43854–00	.SPRING, MANUAL RELEASE	1	1	1			
37	93604–26256	.PIN, DOWEL	2	2	2			
38	91318–05030	.BOLT	2	2	2			
39	91318–03025	.BOLT	2	2	2			
40	91318–03005	.BOLT	1	1	1			
41	69J–43831–00	.CONNECTOR, SHAFT	1	1	1			
42	6C6–43817–00	FILTER 2	2	2	2			
43	69J–4389J–00	O-RING	2	2	2			
44	6C5–43816–00	FILTER 1	1	1	1			
45	6C5–4380G–00	PLATE	1	1	1			
46	91318–05045	BOLT	4	4	4			
47	90110–08M05	BOLT, HEXAGON SOCKET HEAD	3	3	3			
48	6GR–23113–00	COLLAR	3	3	3			

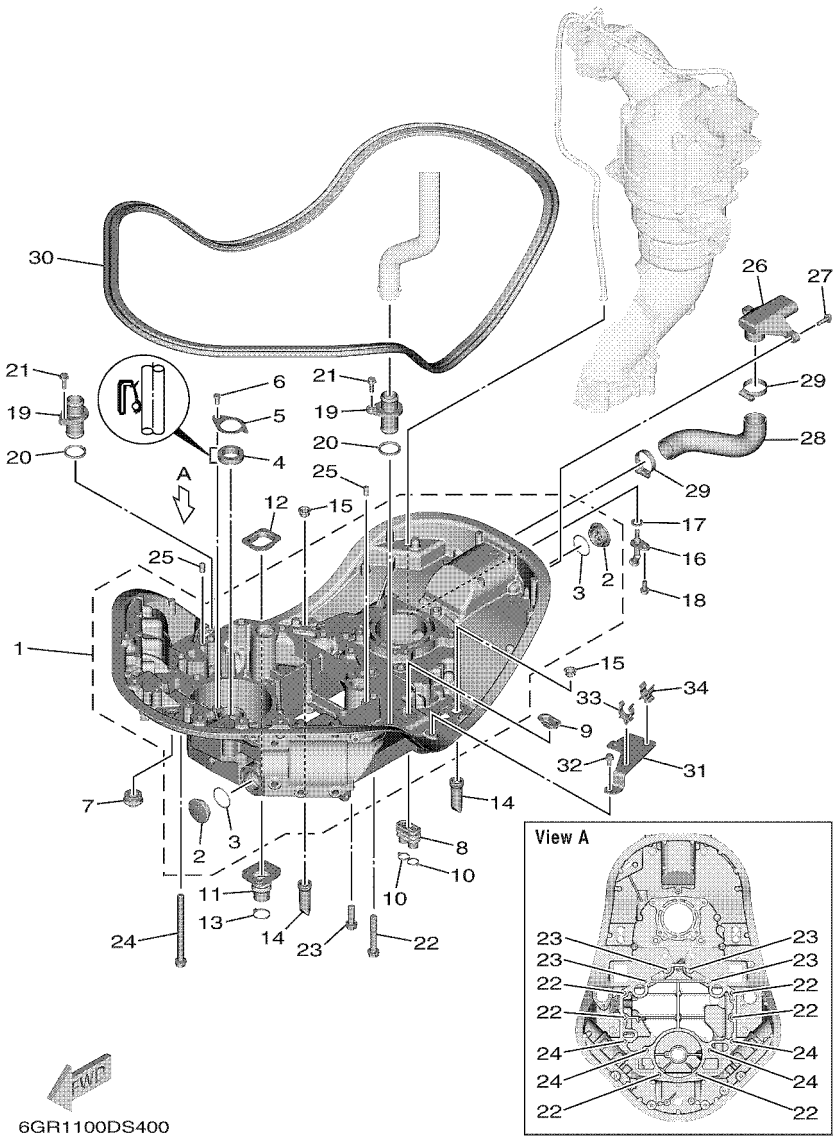

FIG. 40 UPPER CASING 1

REF. NO.	PART NO.	DESCRIPTION	NSA	NSA2	NSA7			REMARKS
1	6GR–41137–00	GUIDE, EXHAUST	1	1	1			
2	90340–32011	.PLUG, STRAIGHT SCREW	2	2	2			
3	93210–32172	.O-RING	2	2	2			
4	93102–26004	OIL SEAL	1	1	1			
5	6GR–41297–00	WASHER, 1	1	1	1			
6	97095–06012	BOLT	1	1	1			
7	6AW–42724–00	GROMMET	1	1	1			
8	6H1–42726–21	GROMMET	2	2	2			
9	6BG–42384–00	SEAL, CAP	2	2	2			
10	90465–11M10	CLAMP	4	4	4			
11	6GR–42724–00	GROMMET	1	1	1			
12	6GR–42384–00	SEAL, CAP	1	1	1			
13	90465–11M59	CLAMP	1	1	1			
14	6DA–42717–00	RUBBER, SEAL 2	4	4	4			
15	6DA–42384–00	SEAL, CAP	4	4	4			
16	6GR–44391–00	NIPPLE, HOSE	1	1	1			
17	60V–42747–10	PAD	1	1	1			
18	95895–06016	BOLT, FLANGE	1	1	1			
19	6GR–12584–00	JOINT, HOSE 3	2	2	2			
20	6GR–44366–00	DAMPER, WATER SEAL 2	2	2	2			
21	95895–06020	BOLT, FLANGE	2	2	2			
22	97575–10570	BOLT, WITH WASHER	6	6	6			
23	90119–10040	BOLT, WITH WASHER	4	4	4			
24	90119–10M08	BOLT, WITH WASHER	4	4	4			
25	93608–16M16	PIN, DOWEL	2	2	2			
26	6GR–14753–00	SILENCER, EXHAUST	1	1	1			
27	95895–06020	BOLT, FLANGE	2	2	2			

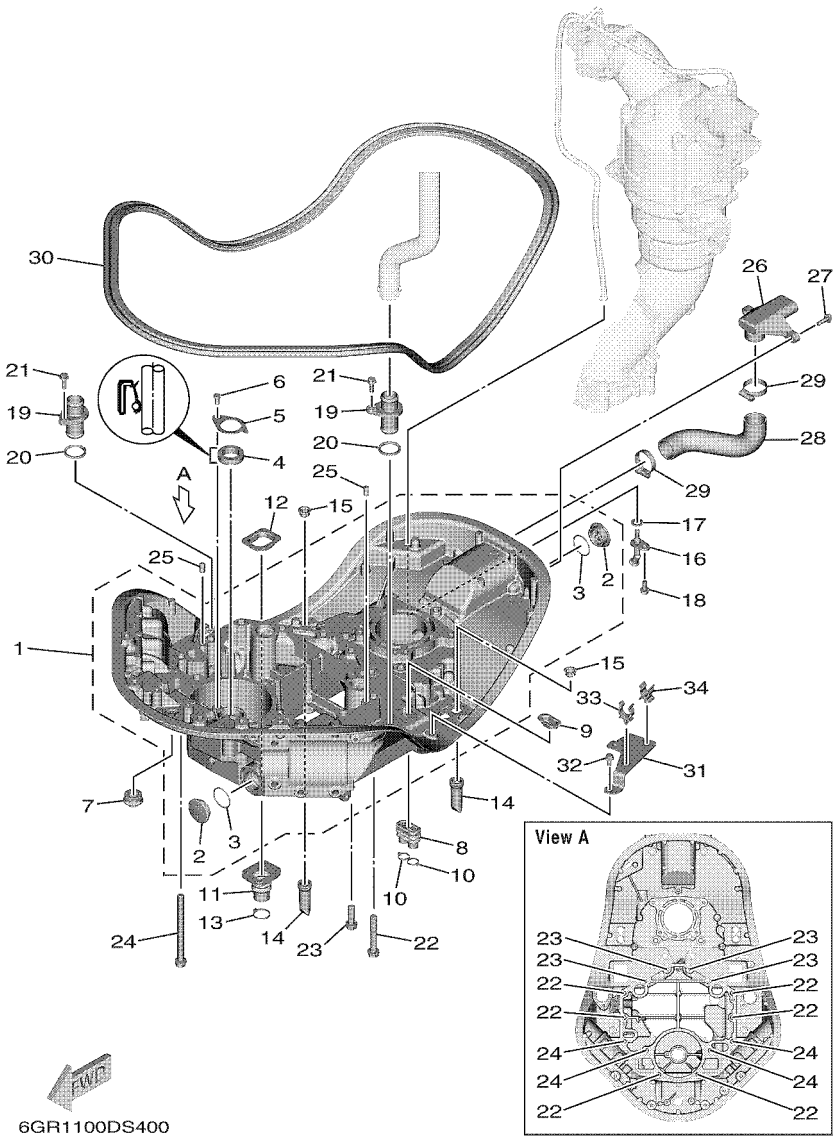

FIG. 40 UPPER CASING 1

REF. NO.	PART NO.	DESCRIPTION	NSA	NSA2	NSA7			REMARKS
28	6GR–45135–00	PIPE	1	1	1			
29	90450–35003	HOSE CLAMP ASSY	2	2	2			
30	6GR–42716–00	RUBBER SEAL 1	1	1	1			
31	6GR–82398–00	PLATE 3	1	1	1			
32	95895–06012	BOLT, FLANGE	2	2	2			
33	90464–19M45	CLAMP	1	1	1			
34	90464–12015	CLAMP	1	1	1			

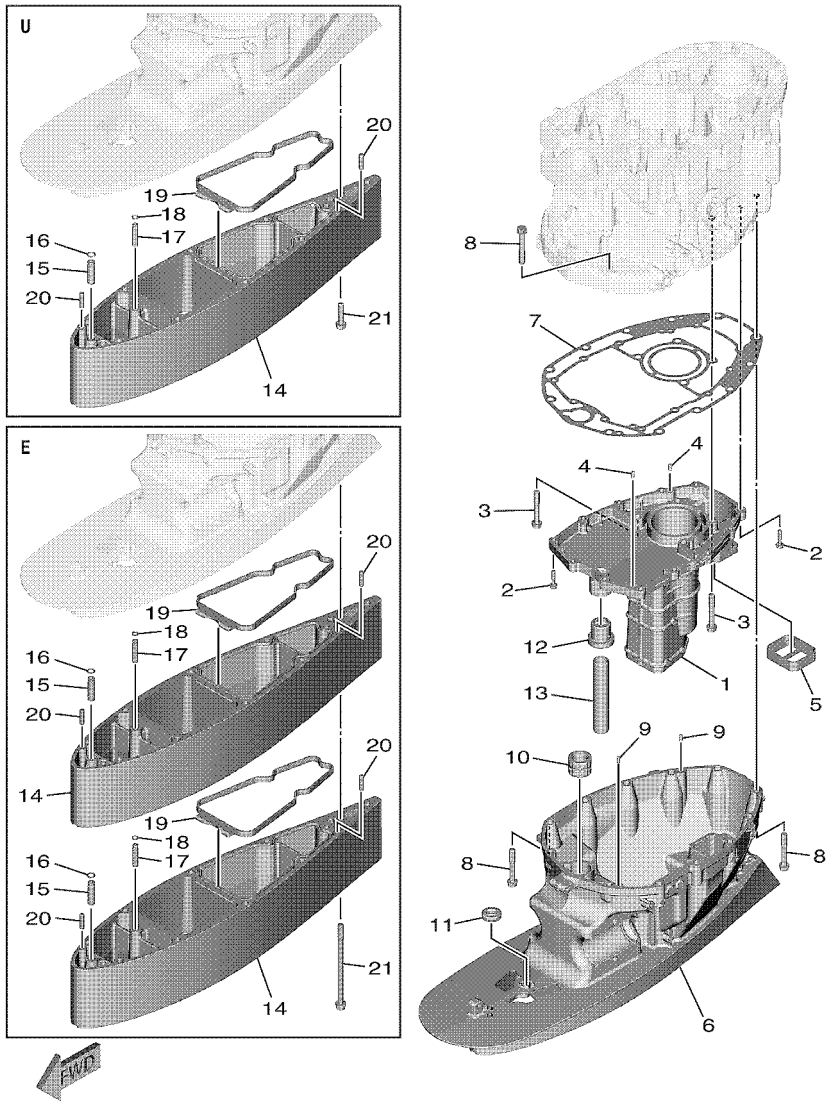

6GR1100DS410

FIG. 41 UPPER CASING 2

REF. NO.	PART NO.	DESCRIPTION	NSA	NSA2	NSA7			REMARKS
1	6GR–14711–00	MUFFLER 1	1	1	1			
2	95895–06030	BOLT, FLANGE	12	12	12			
3	97575–10570	BOLT, WITH WASHER	4	4	4			
4	93606–12019	PIN, DOWEL	2	2	2			
5	6GR–45127–00	SEAL	1	1	1			
6	6GR–45111–00–8D	CASING, UPPER	1					GRAY
	6GR–45111–00–CE	CASING, UPPER		1	1			WHITE
7	6GR–45113–00	GASKET, UPPER CASING	1	1	1			
8	97575–10570	BOLT, WITH WASHER	12	12	12			
9	93606–12019	PIN, DOWEL	2	2	2			
10	6GR–45318–00	BUSHING, DRIVE SHAFT	1	1	1			
11	6GR–44521–00	SEAL	1	1	1			
12	6GR–44367–00	DAMPER, WATER SEAL 3	1	1	1			
13	90440–27001	PIPE	1	1	1			UR X(25.2")
	90440–27002	PIPE	1	1	1			UR U(30.2")
	90440–27003	PIPE	1	1	1			UR E(35.2")
14	6GR–45211–00–8D	EXTENSION	1					UR GRAY,U(30.2")
	6GR–45211–00–8D	EXTENSION	2					UR GRAY,E(35.2")
	6GR–45211–00–CE	EXTENSION		1	1			UR WHITE,U(30.2")
	6GR–45211–00–CE	EXTENSION		2	2			UR WHITE,E(35.2")
15	6GR–45398–00	NIPPLE, 1	1	1	1			UR U(30.2")
	6GR–45398–00	NIPPLE, 1	2	2	2			UR E(35.2")
16	93210–10010	O-RING	1	1	1			UR U(30.2")
	93210–10010	O-RING	2	2	2			UR E(35.2")
17	6GR–45399–00	NIPPLE, 2	1	1	1			UR U(30.2")
	6GR–45399–00	NIPPLE, 2	2	2	2			UR E(35.2")
18	93210–07100	O-RING	1	1	1			UR U(30.2")

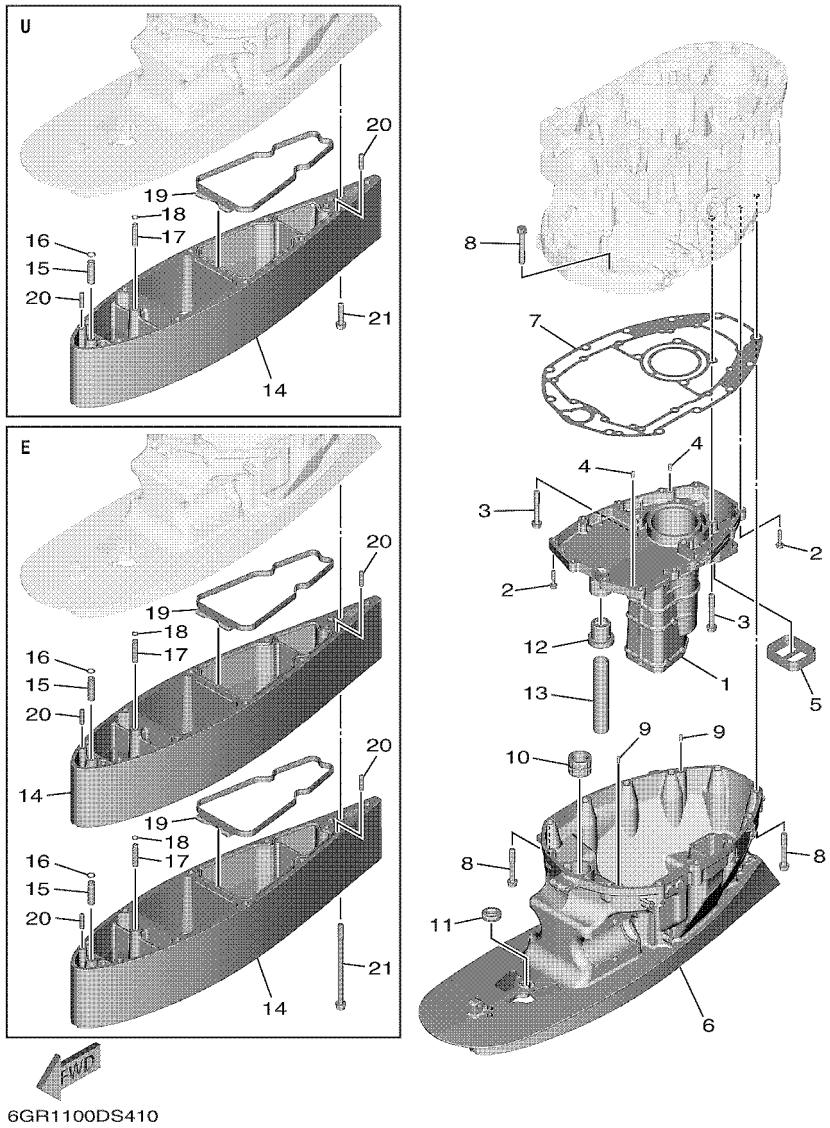

FIG. 41 UPPER CASING 2

REF. NO.	PART NO.	DESCRIPTION	NSA	NSA2	NSA7			REMARKS
18	93210–07100	O-RING	2	2	2			UR E(35.2")
19	6GR–45375–00	DAMPER, SEAL	1	1	1			UR U(30.2")
	6GR–45375–00	DAMPER, SEAL	2	2	2			UR E(35.2")
20	99480–08030	PIN	2	2	2			UR U(30.2")
	99480–08030	PIN	4	4	4			UR E(35.2")
21	90119–10024	BOLT, WITH WASHER	1	1	1			UR U(30.2")
	90119–10009	BOLT, WITH WASHER	1	1	1			UR E(35.2")

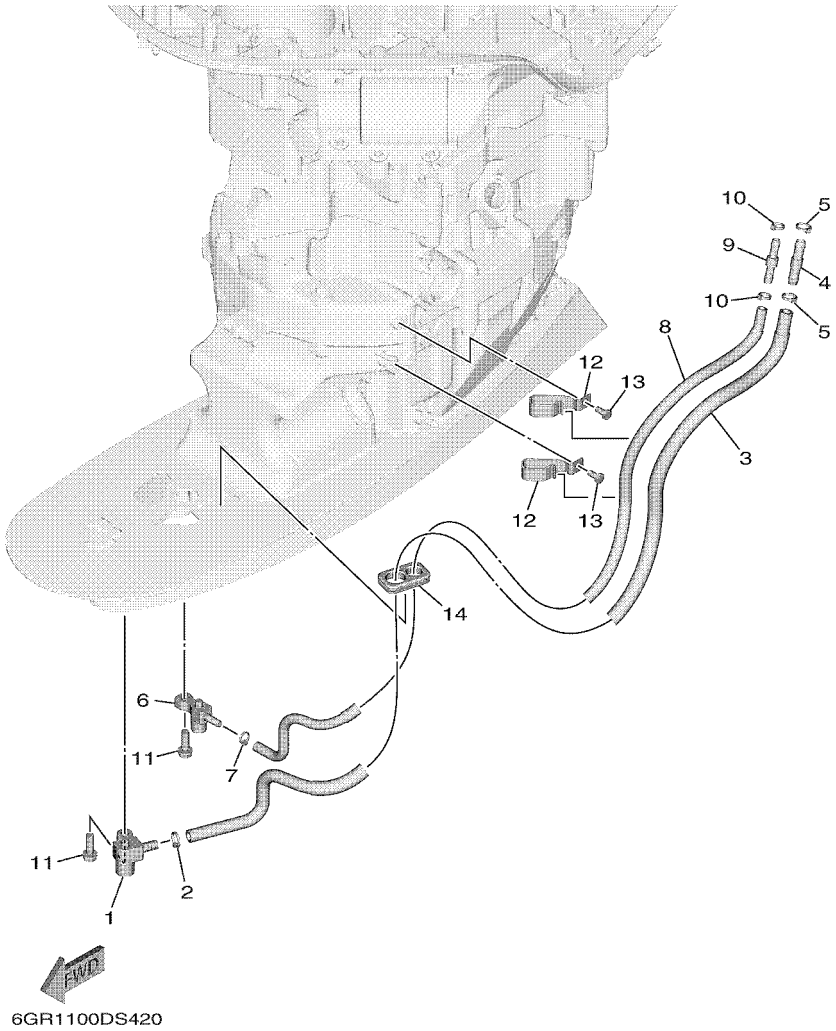

FIG. 42 UPPER CASING 3

REF. NO.	PART NO.	DESCRIPTION	NSA	NSA2	NSA7			REMARKS
1	6GR–45368–00	JOINT, HOSE 1	1	1	1			
2	90465–11M10	CLAMP	1	1	1			
3	6GR–4383K–00	HOSE, OIL 1	1	1	1			
4	6AW–42785–00	PIPE	1	1	1			
5	90465–11M10	CLAMP	2	2	2			
6	6GR–45369–00	JOINT, HOSE 2	1	1	1			
7	90465–11M10	CLAMP	1	1	1			
8	6GR–2318F–00	HOSE, AIR	1	1	1			
9	6E5–24379–00	PIPE, JOINT 4	1	1	1			
10	90465–11M10	CLAMP	2	2	2			
11	97595–08525	BOLT, WITH WASHER	2	2	2			
12	6GR–12491–00	CLAMP 1	2	2	2			
13	97095–06012	BOLT	2	2	2			
14	6GR–45159–00	DAMPER	1	1	1			

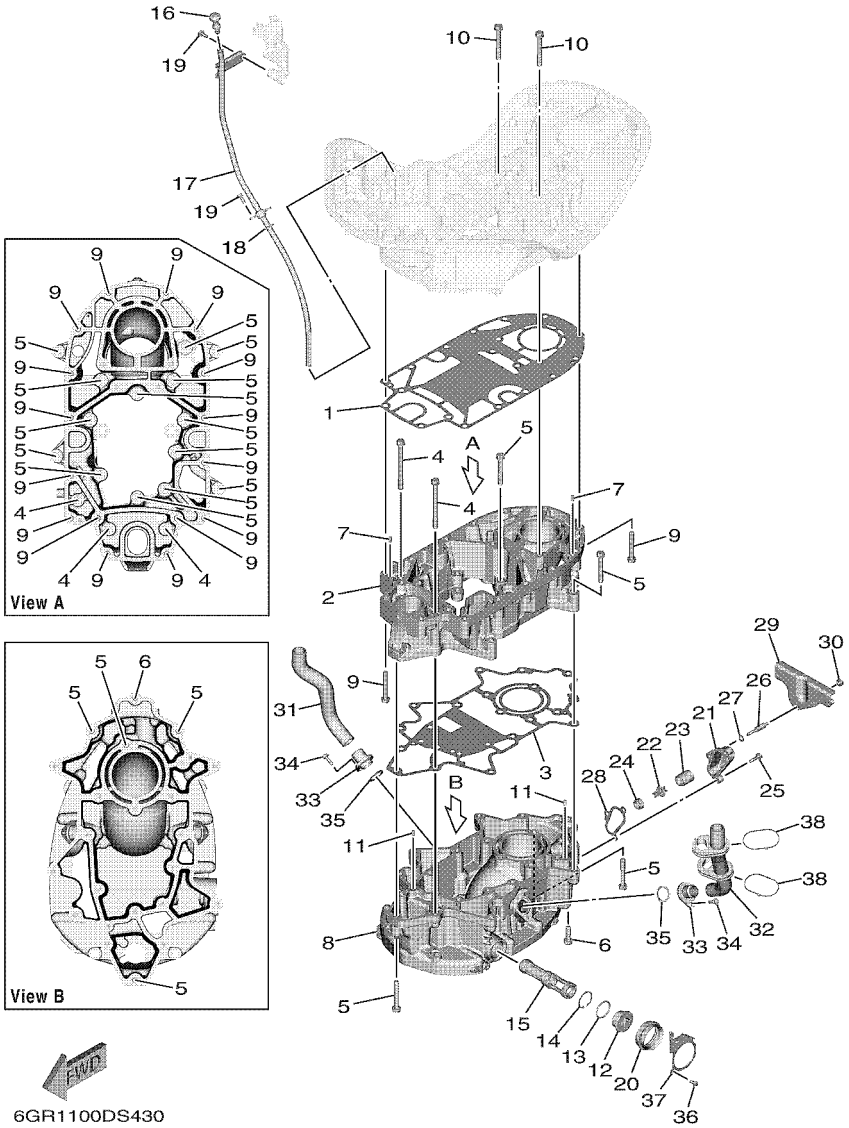

FIG. 43 OIL PAN

REF. NO.	PART NO.	DESCRIPTION	NSA	NSA2	NSA7			REMARKS
1	6GR–15312–00	GASKET, OIL PAN	1	1	1			
2	6GR–1531B–00	OIL PAN 2	1	1	1			
3	6GR–1531C–00	GASKET, OIL PAN 2	1	1	1			
4	90119–10M14	BOLT, WITH WASHER	3	3	3			
5	97575–10570	BOLT, WITH WASHER	18	18	18			
6	90119–10040	BOLT, WITH WASHER	1	1	1			
7	93606–12019	PIN, DOWEL	2	2	2			
8	6GR–15311–00	OIL PAN	1	1	1			
9	97575–10570	BOLT, WITH WASHER	16	16	16			
10	97575–10580	BOLT, WITH WASHER	4	4	4			
11	93606–12019	PIN, DOWEL	2	2	2			
12	6GR–15351–00	PLUG, DRAIN	1	1	1			
13	93210–34633	O-RING	1	1	1			
14	93420–36M01	CIRCLIP	1	1	1			
15	6GR–13411–00	STRAINER, OIL	1	1	1			
16	6GR–15362–00	PLUG, OIL LEVEL	1	1	1			
17	6GR–15377–00	GUIDE, INLET	1	1	1			
18	93210–19MJ3	O-RING	1	1	1			
19	95895–06016	BOLT, FLANGE	3	3	3			
20	6GR–15316–00	DAMPER 1	1	1	1			
21	6EK–1246A–00–9S	COVER 1	1	1	1			
22	6G5–12416–00	VALVE, PRESSURE CONTROL	1	1	1			
23	90501–200A2	SPRING, COMPRESSION	1	1	1			
24	90480–20M05	GROMMET	1	1	1			
25	95895–06025	BOLT, FLANGE	1	1	1			
26	6GR–42742–00	BOLT	2	2	2			
27	92995–06200	WASHER	2	2	2			

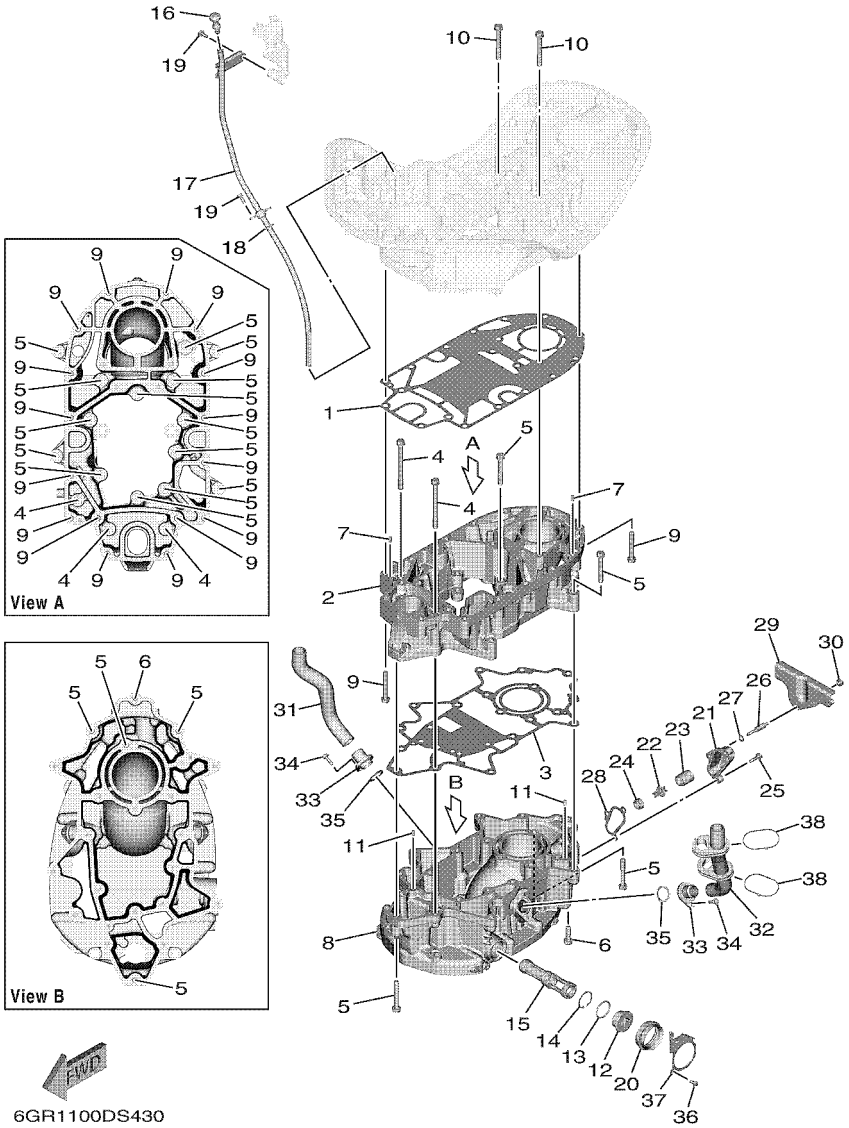

FIG. 43 OIL PAN

REF. NO.	PART NO.	DESCRIPTION	NSA	NSA2	NSA7			REMARKS
28	6EK–12435–A0	GASKET	1	1	1			
29	6GR–42776–00	STAY, APRON 3	1	1	1			
30	90179–06M28	NUT	2	2	2			
31	6GR–1243F–00	HOSE,3	1	1	1			
32	6GR–1257A–00	HOSE ASSY 1	1	1	1			
33	6GR–12581–00	JOINT, HOSE 1	2	2	2			
34	95895–06020	BOLT, FLANGE	2	2	2			
35	6GR–44366–00	DAMPER, WATER SEAL 2	2	2	2			
36	97095–06012	BOLT	1	1	1			
37	6GR–45152–00	COVER, UPPER CASING 2	1	1	1			
38	90464–66001	CLAMP	2	2	2			

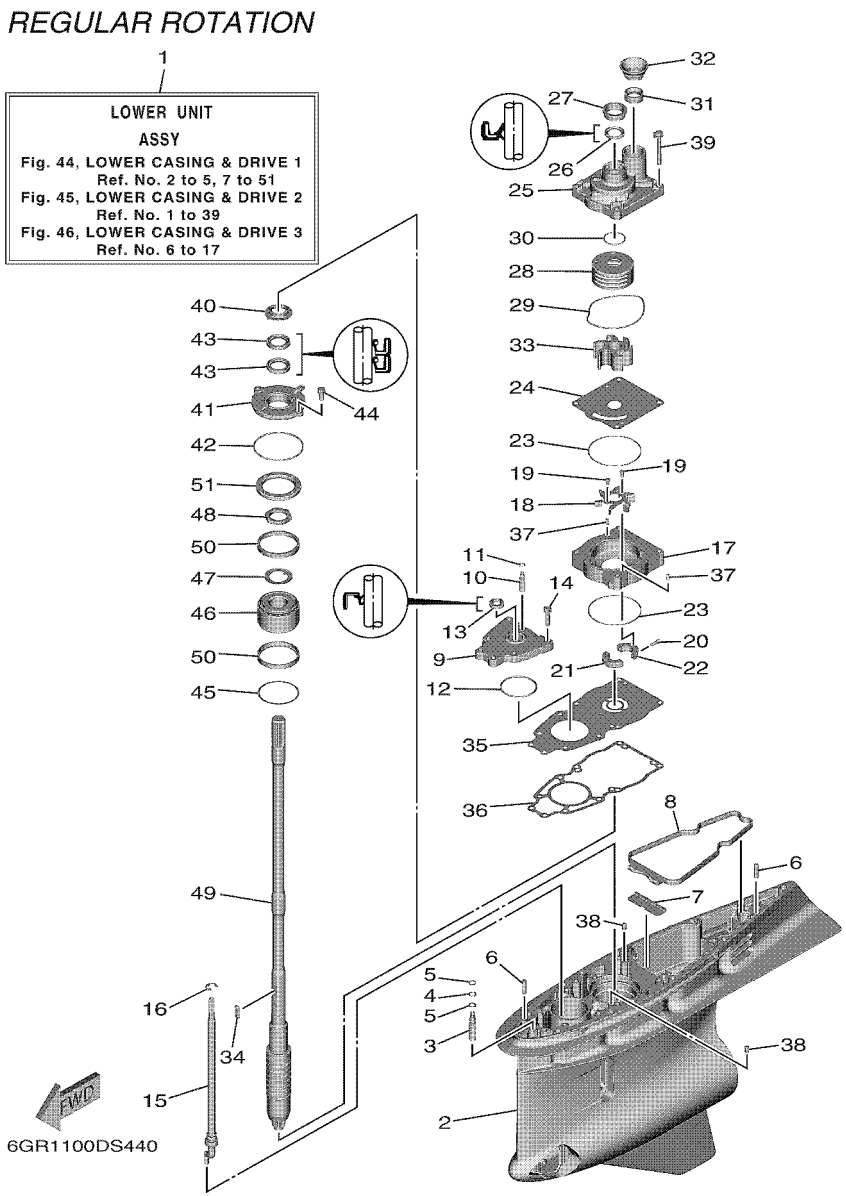

FIG. 44 LOWER CASING & DRIVE 1

REF. NO.	PART NO.	DESCRIPTION	NSA	NSA2	NSA7			REMARKS
1	6GR–45300–00–8D	LOWER UNIT ASSY	1					GRAY, X(25.2")
	6GR–45300–00–CE	LOWER UNIT ASSY		1	1			WHITE, X(25.2")
	6GR–45300–10–8D	LOWER UNIT ASSY	1					GRAY, U(30.2")
	6GR–45300–10–CE	LOWER UNIT ASSY		1	1			WHITE, U(30.2")
	6GR–45300–20–8D	LOWER UNIT ASSY	1					GRAY, E(35.2")
	6GR–45300–20–CE	LOWER UNIT ASSY		1	1			WHITE, E(35.2")
2	6GR–45311–00–8D	CASING, LOWER	1					GRAY
	6GR–45311–00–CE	CASING, LOWER		1	1			WHITE
3	6GR–45308–00	VALVE ASSY 1	1	1	1			
4	93210–10010	O-RING	1	1	1			
5	6GR–43873–00	RING, BACK UP	2	2	2			
6	99480–08030	PIN	2	2	2			
7	6GR–45376–00	GUIDE, SEAL DAMPER	1	1	1			
8	6GR–45375–00	DAMPER, SEAL	1	1	1			
9	6GR–45321–00	PLATE	1	1	1			
10	6GR–45309–00	VALVE ASSY 2	1	1	1			
11	93210–07100	O-RING	1	1	1			
12	93210–64488	O-RING	1	1	1			
13	93106–14001	OIL SEAL	1	1	1			
14	97595–08535	BOLT, WITH WASHER	6	6	6			
15	6GR–44150–00	SHIFT CAM ASSY	1	1	1			UR X(25.2")
	6GR–44150–10	SHIFT CAM ASSY	1	1	1			UR U(30.2")
	6GR–44150–20	SHIFT CAM ASSY	1	1	1			UR E(35.2")
16	99002–12600	CIRCLIP	1	1	1			
17	6GR–44341–00	HOUSING, WATER PUMP	1	1	1			
18	6GR–12451–00	IMPELLER, WATER PUMP	1	1	1			
19	97095–05010	BOLT	2	2	2			

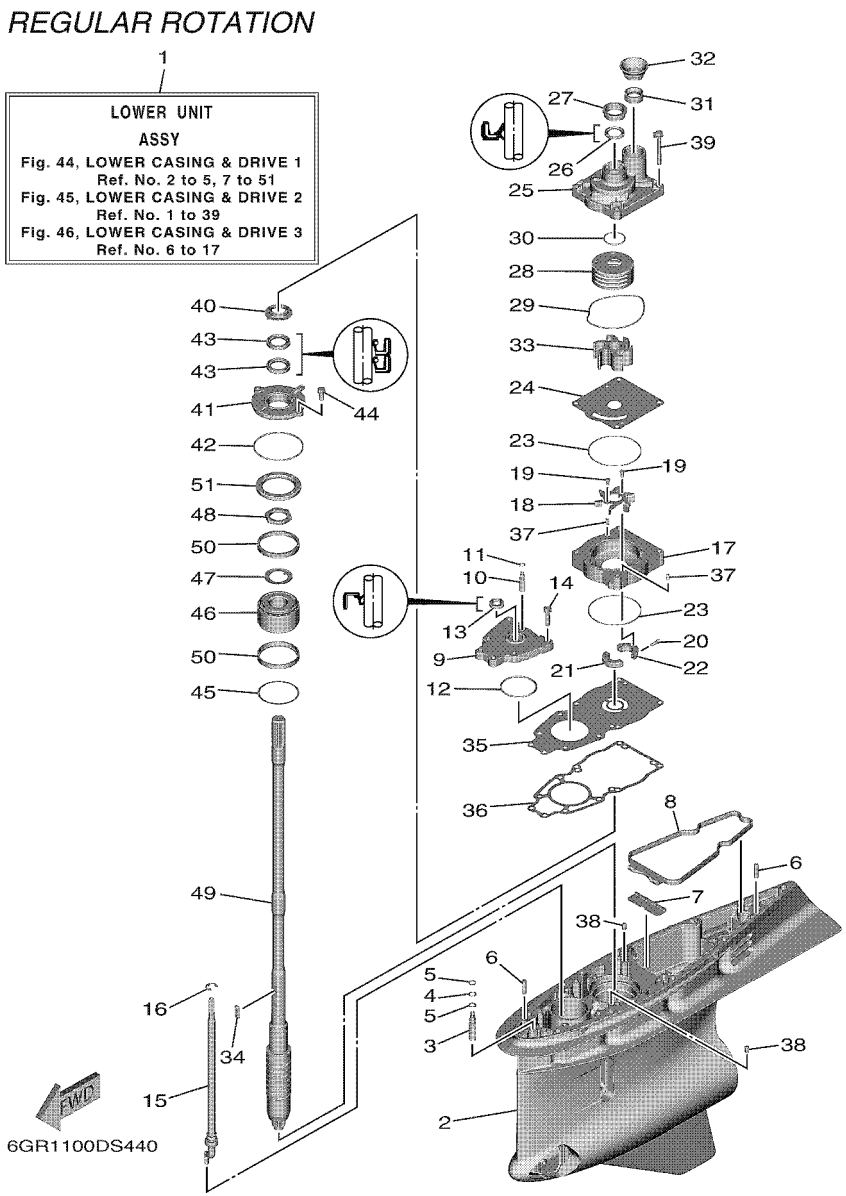

FIG. 44 LOWER CASING & DRIVE 1

REF. NO.	PART NO.	DESCRIPTION	NSA	NSA2	NSA7			REMARKS
20	91380–05016	BOLT	2	2	2			
21	6GR–44381–00	SPACER 1	1	1	1			
22	6GR–44382–00	SPACER 2	1	1	1			
23	93210–97690	O-RING	2	2	2			
24	6GR–44323–00	OUTER PLATE, CARTRIDGE	1	1	1			
25	6GR–44311–00	HOUSING, WATER PUMP	1	1	1			
26	93109–26001	OIL SEAL	1	1	1			
27	6GR–44312–00	COVER, WATER PUMP HOUSING	1	1	1			
28	6GR–44322–00	INSERT, CARTRIDGE	1	1	1			
29	93211–08001	O-RING	1	1	1			
30	93210–37160	O-RING	1	1	1			
31	6GR–44365–00	DAMPER, WATER SEAL 1	1	1	1			
32	6GR–44379–00	GUIDE, WATER TUBE	1	1	1			
33	6GR–44352–00	IMPELLER	1	1	1			
34	6AW–44336–00	KEY	1	1	1			
35	6GR–44328–00	PLATE	1	1	1			
36	6GR–44315–00	GASKET, WATER PUMP	1	1	1			
37	93606–12019	PIN, DOWEL	2	2	2			
38	93608–12M05	PIN, DOWEL	2	2	2			
39	90119–08M16	BOLT, WITH WASHER	4	4	4			
40	6GR–45344–00	COVER, OIL SEAL	1	1	1			
41	6GR–45335–00	HOUSING, OIL SEAL	1	1	1			
42	93210–89535	O-RING	1	1	1			
43	93101–30018	OIL SEAL	2	2	2			
44	97595–08520	BOLT, WITH WASHER	2	2	2			
45	688–45567–01	SHIM (T:0.10MM)	1	1	1			UR
	688–45567–10	SHIM (T:0.12MM)	1	1	1			UR

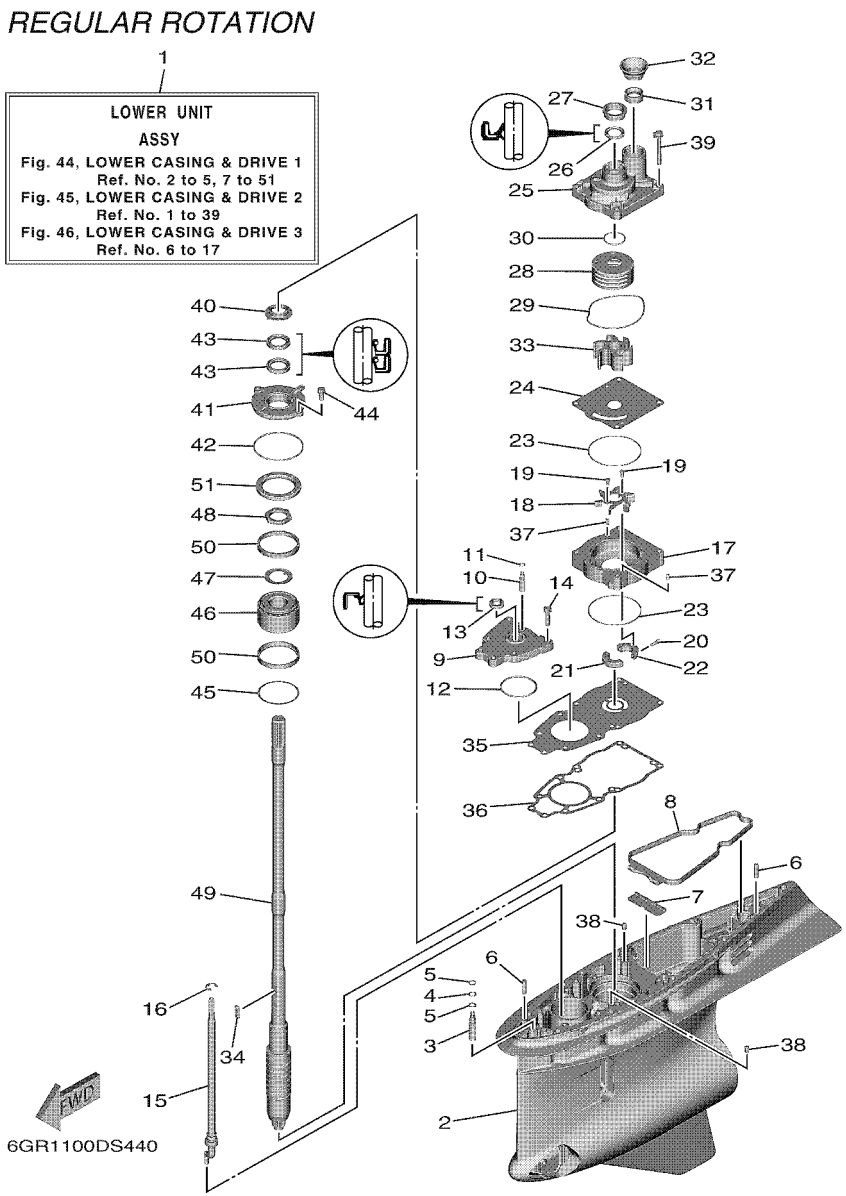

FIG. 44 LOWER CASING & DRIVE 1

REF. NO.	PART NO.	DESCRIPTION	NSA	NSA2	NSA7			REMARKS
45	688–45567–20	SHIM (T:0.15MM)	1	1	1			UR
	688–45567–30	SHIM (T:0.18MM)	1	1	1			UR
	688–45567–40	SHIM (T:0.30MM)	1	1	1			UR
	688–45567–50	SHIM (T:0.40MM)	1	1	1			UR
	688–45567–60	SHIM (T:0.50MM)	1	1	1			UR
46	93399–99967	BEARING	1	1	1			
47	90214–35M07	WASHER, CLAW	1	1	1			
48	90170–35M34	NUT	1	1	1			
49	6GR–45501–00	DRIVE SHAFT COMP.	1	1	1			UR X(25.2")
	6GR–45501–10	DRIVE SHAFT COMP.	1	1	1			UR U(30.2")
	6GR–45501–20	DRIVE SHAFT COMP.	1	1	1			UR E(35.2")
50	6GR–45539–00	SPACER 2	2	2	2			
51	6GR–45244–00	NUT	1	1	1			

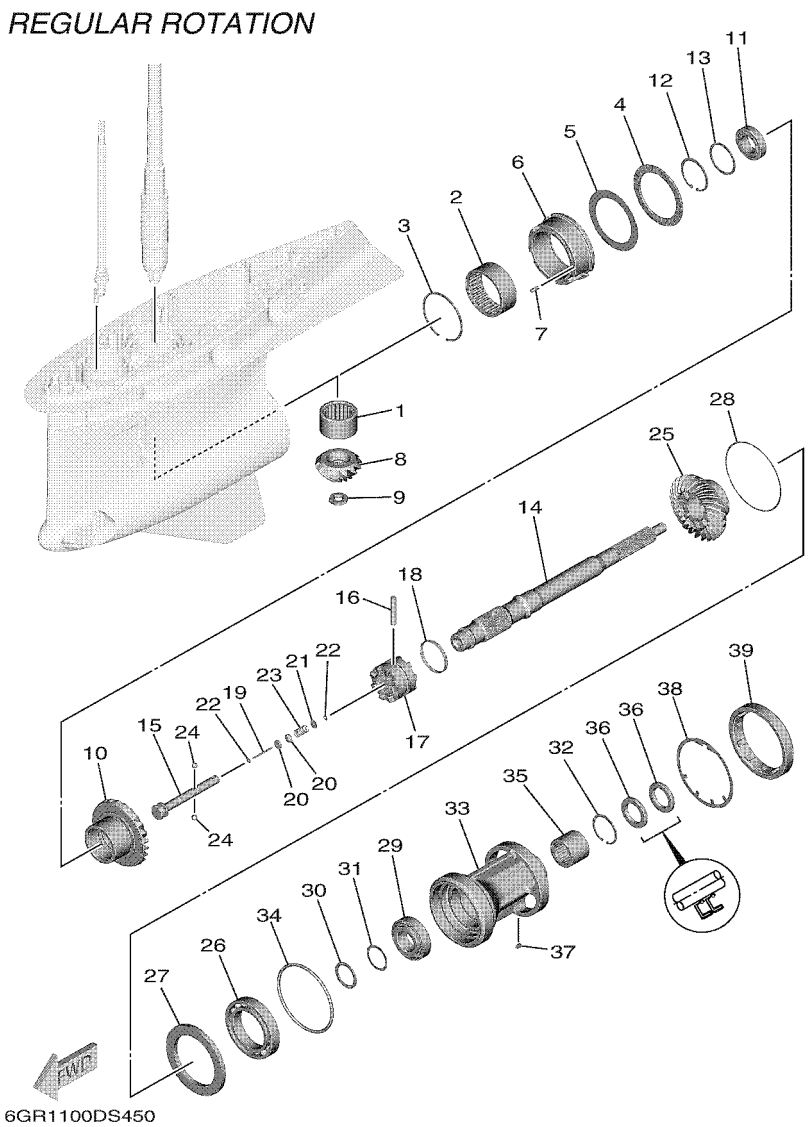

FIG. 45 LOWER CASING & DRIVE 2

REF. NO.	PART NO.	DESCRIPTION	NSA	NSA2	NSA7			REMARKS
1	93311–944A0	BEARING	1	1	1			
2	93311–675A1	BEARING	1	1	1			
3	93450–92171	CIRCLIP	1	1	1			
4	93340–69012	BEARING	1	1	1			
5	6GR–45567–00	SHIM (T:2.00MM)	1	1	1			UR
	6GR–45567–10	SHIM (T:2.03MM)	1	1	1			UR
	6GR–45567–20	SHIM (T:2.06MM)	1	1	1			UR
	6GR–45567–30	SHIM (T:2.09MM)	1	1	1			UR
	6GR–45567–40	SHIM (T:2.12MM)	1	1	1			UR
	6GR–45567–50	SHIM (T:2.15MM)	1	1	1			UR
	6GR–45567–60	SHIM (T:2.18MM)	1	1	1			UR
	6GR–45567–70	SHIM (T:2.21MM)	1	1	1			UR
6	6GR–45824–00	ADAPTER	1	1	1			
7	93606–16117	PIN, DOWEL	1	1	1			
8	6GR–45551–00	PINION (14T)	1	1	1			
9	90170–18009	NUT	1	1	1			
10	6GR–45561–00	GEAR 1 (25T)	1	1	1			
11	93332–000A0	BEARING	1	1	1			
12	99009–62500	CIRCLIP	1	1	1			
13	90201–54008	WASHER, PLATE	1	1	1			
14	6GR–45611–00	SHAFT, PROPELLER	1	1	1			
15	6GR–45634–00	SLIDE, SHIFT	1	1	1			
16	6GR–45632–00	PIN, CROSS	1	1	1			
17	6GR–45631–00	CLUTCH, DOG	1	1	1			
18	6GR–45633–00	RING, CROSS PIN	1	1	1			
19	6H1–45668–00	SHAFT, FREE 1	1	1	1			
20	61A–45635–00	PLUNGER, SHIFT	2	2	2			

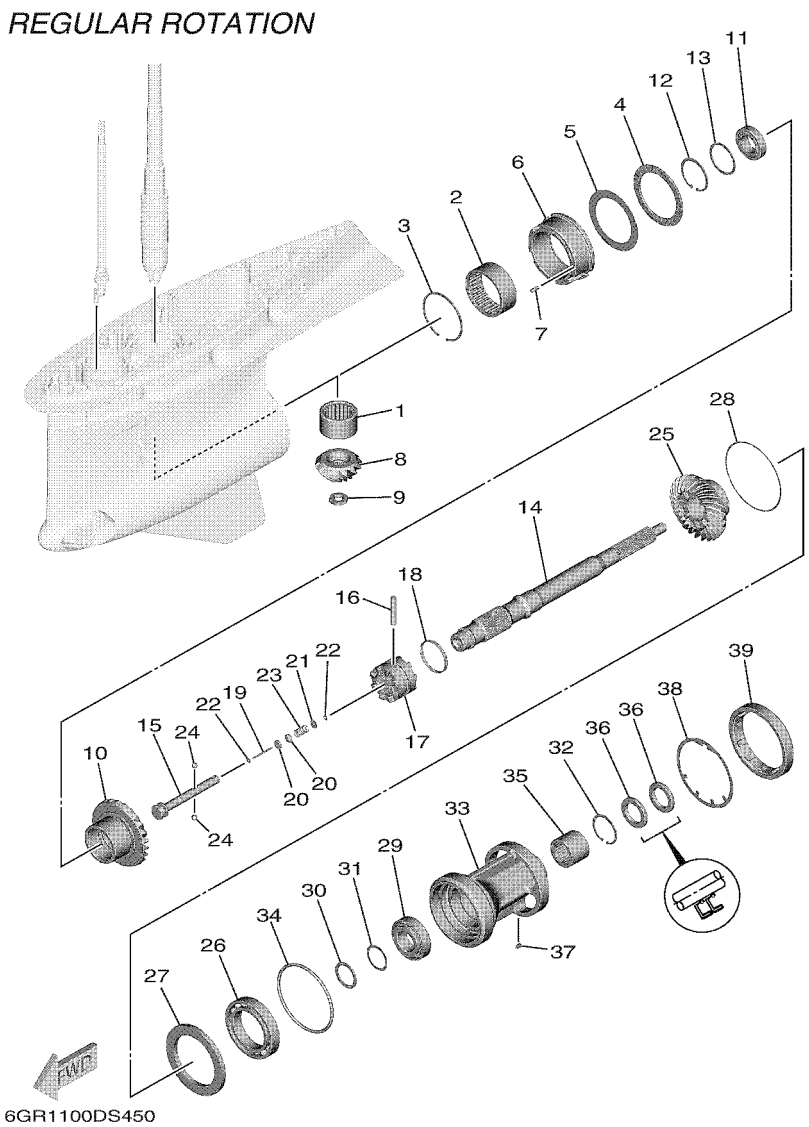

FIG. 45 LOWER CASING & DRIVE 2

REF. NO.	PART NO.	DESCRIPTION	NSA	NSA2	NSA7			REMARKS
21	90201–02M00	WASHER, PLATE	1	1	1			
22	90183–02M03	NUT, SPRING	2	2	2			
23	90501–10M77	SPRING, COMPRESSION	1	1	1			
24	93501–04011	BALL	2	2	2			
25	6GR–45571–00	GEAR 2 (25T)	1	1	1			
26	93306–01501	BEARING	1	1	1			
27	6GR–45576–00	WASHER, THRUST 2	1	1	1			
28	6GR–45577–00	SHIM (T:0.10MM)	1	1	1			UR
	6GR–45577–10	SHIM (T:0.12MM)	1	1	1			UR
	6GR–45577–20	SHIM (T:0.15MM)	1	1	1			UR
	6GR–45577–30	SHIM (T:0.18MM)	1	1	1			UR
	6GR–45577–40	SHIM (T:0.30MM)	1	1	1			UR
	6GR–45577–50	SHIM (T:0.40MM)	1	1	1			UR
	6GR–45577–60	SHIM (T:0.50MM)	1	1	1			UR
29	93332–00042	BEARING	1	1	1			
30	90201–40008	WASHER, PLATE	1	1	1			
31	6GR–45578–00	SHIM (T:0.10MM)	1	1	1			UR
	6GR–45578–10	SHIM (T:0.12MM)	1	1	1			UR
	6GR–45578–20	SHIM (T:0.15MM)	1	1	1			UR
	6GR–45578–30	SHIM (T:0.18MM)	1	1	1			UR
	6GR–45578–40	SHIM (T:0.30MM)	1	1	1			UR
	6GR–45578–50	SHIM (T:0.40MM)	1	1	1			UR
	6GR–45578–60	SHIM (T:0.50MM)	1	1	1			UR
	6GR–45578–70	SHIM (T:1.00MM)	1	1	1			UR
32	99009–55500	CIRCLIP	1	1	1			
33	6GR–45332–00	HOUSING, BEARING	1	1	1			
34	93211–26001	O-RING	1	1	1			

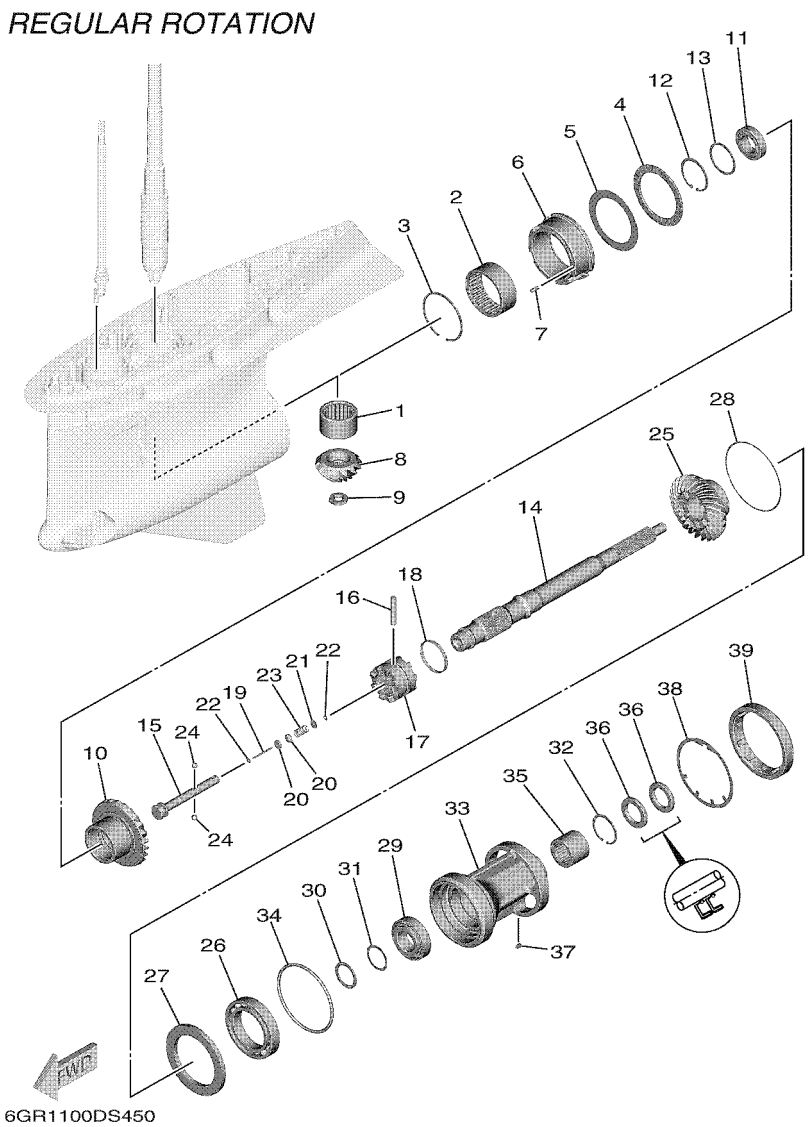

FIG. 45 LOWER CASING & DRIVE 2

REF. NO.	PART NO.	DESCRIPTION	NSA	NSA2	NSA7			REMARKS
35	93311–737A2	BEARING	1	1	1			
36	93101–37001	OIL SEAL	2	2	2			
37	90282–05008	KEY, STRAIGHT	1	1	1			
38	6GR–45383–00	WASHER, CLAW	1	1	1			
39	6GR–45384–00	NUT	1	1	1			

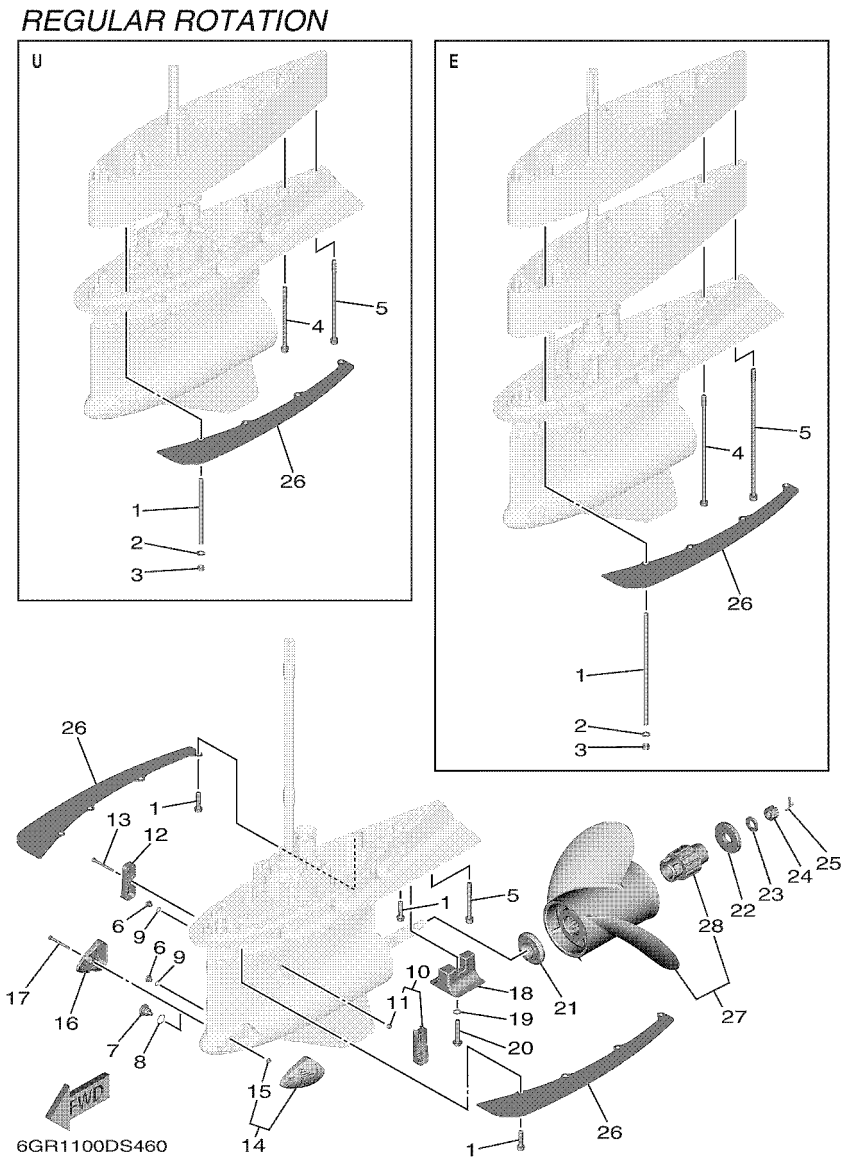

FIG. 46 LOWER CASING & DRIVE 3

REF. NO.	PART NO.	DESCRIPTION	NSA	NSA2	NSA7			REMARKS
1	90119–10024	BOLT, WITH WASHER	9	9	9			UR X(25.2")
	90116–10067	BOLT, STUD	8	8	8			UR U(30.2")
	90116–10066	BOLT, STUD	8	8	8			UR E(35.2")
2	92995–10600	WASHER	8	8	8			U(30.2"),E(35.2")
3	95380–10600	NUT	8	8	8			U(30.2"),E(35.2")
4	90119–10009	BOLT, WITH WASHER	1	1	1			UR U(30.2")
	90119–10060	BOLT, WITH WASHER	1	1	1			UR E(35.2")
5	90110–10048	BOLT, HEXAGON SOCKET HEAD	1	1	1			UR X(25.2")
	90110–10049	BOLT, HEXAGON SOCKET HEAD	1	1	1			UR U(30.2")
	90110–10050	BOLT, HEXAGON SOCKET HEAD	1	1	1			UR E(35.2")
6	90340–08003	PLUG, STRAIGHT SCREW	2	2	2			
7	6GR–45341–00	PLUG, DRAIN	1	1	1			
8	93210–19123	O-RING	1	1	1			
9	93210–09165	O-RING	2	2	2			
10	6GR–45214–00	COVER, WATER INLET 1	1	1	1			
11	90185–06M07	.NUT, SELF-LOCKING	1	1	1			
12	6GR–45215–00	COVER, WATER INLET 2	1	1	1			
13	90110–06425	BOLT, HEXAGON SOCKET HEAD	1	1	1			
14	6GR–45224–00	COVER, WATER INLET 3	1	1	1			
15	90185–06M07	.NUT, SELF-LOCKING	1	1	1			
16	6GR–45225–00	COVER, WATER INLET 4	1	1	1			
17	90110–06425	BOLT, HEXAGON SOCKET HEAD	1	1	1			
18	6AW–45373–00	ANODE	1	1	1			
19	92990–10300	WASHER	1	1	1			
20	90105–10257	BOLT, FLANGE	1	1	1			
21	6GR–45987–00	SPACER 1	1	1	1			
22	6GR–45997–00	SPACER 2	1	1	1			

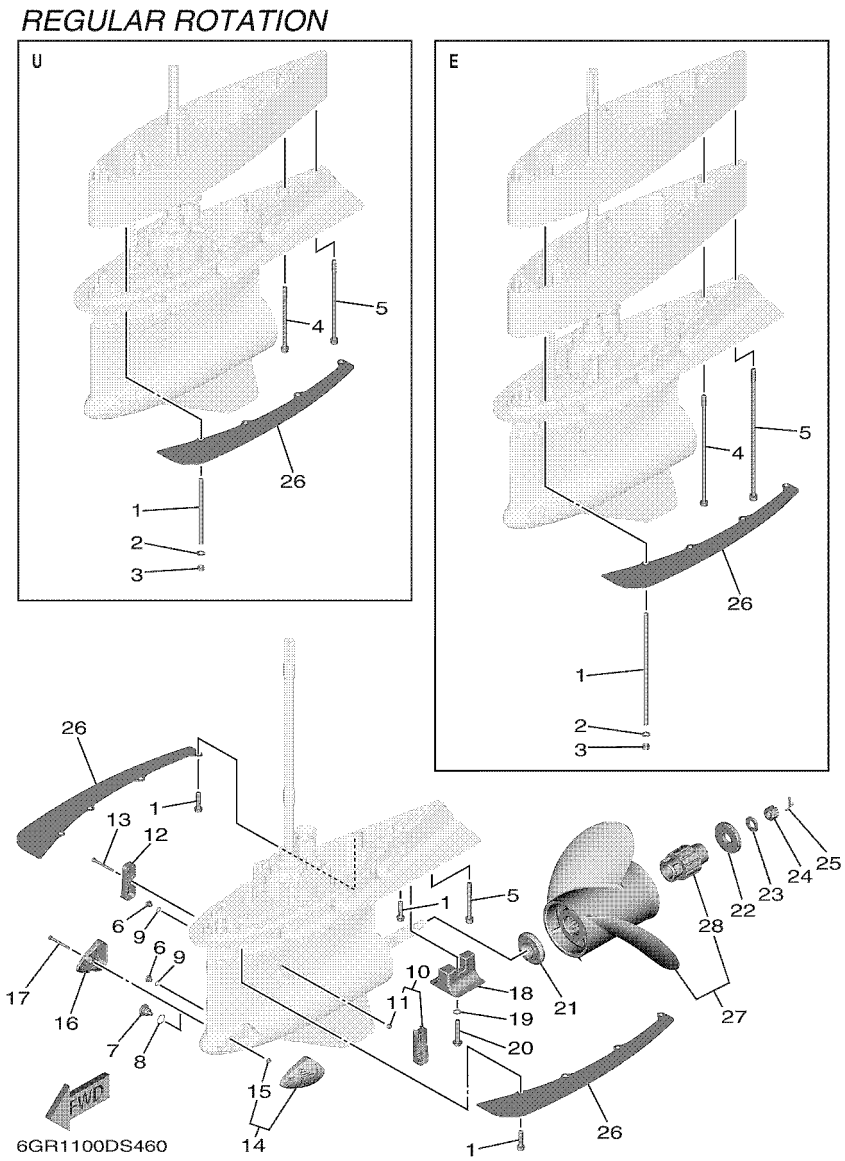

FIG. 46 LOWER CASING & DRIVE 3

REF. NO.	PART NO.	DESCRIPTION	NSA	NSA2	NSA7			REMARKS
23	90201–19M01	WASHER, PLATE	1	1	1			
24	90171–18M04	NUT, CASTLE	1	1	1			
25	91490–40030	PIN. COTTER	1	1	1			
26	6GR–45158–00–8D	PLATE, SPLASH	2					GRAY
	6GR–45158–00–CE	PLATE, SPLASH		2	2			WHITE
27	6GR–45970–10	PROPELLER (3X17-1/8"X15"-Y)	1	1	1			UR
	6GR–45972–10	PROPELLER (3X16-7/8"X17"-Y)	1	1	1			UR
	6GR–45974–10	PROPELLER (3X16-5/8"X19"-Y)	1	1	1			UR
	6GR–45976–10	PROPELLER (3X16-3/8"X21"-Y)	1	1	1			UR
	6GR–45978–10	PROPELLER (3X16-1/8"X23"-Y)	1	1	1			UR
	6GR–45930–10	PROPELLER (3X16"X25"-Y)	1	1	1			UR
	6GR–45938–10	PROPELLER (3X16-5/8"X18"-Y)	1	1	1			UR
	6GR–45936–10	PROPELLER (3X16-3/8"X20"-Y)	1	1	1			UR
	6GR–45934–10	PROPELLER (3X16-1/8"X22"-Y)	1	1	1			UR
28	6GR–45C81–10	.DAMPER RUBBER, PROPELLER 1	1	1	1			

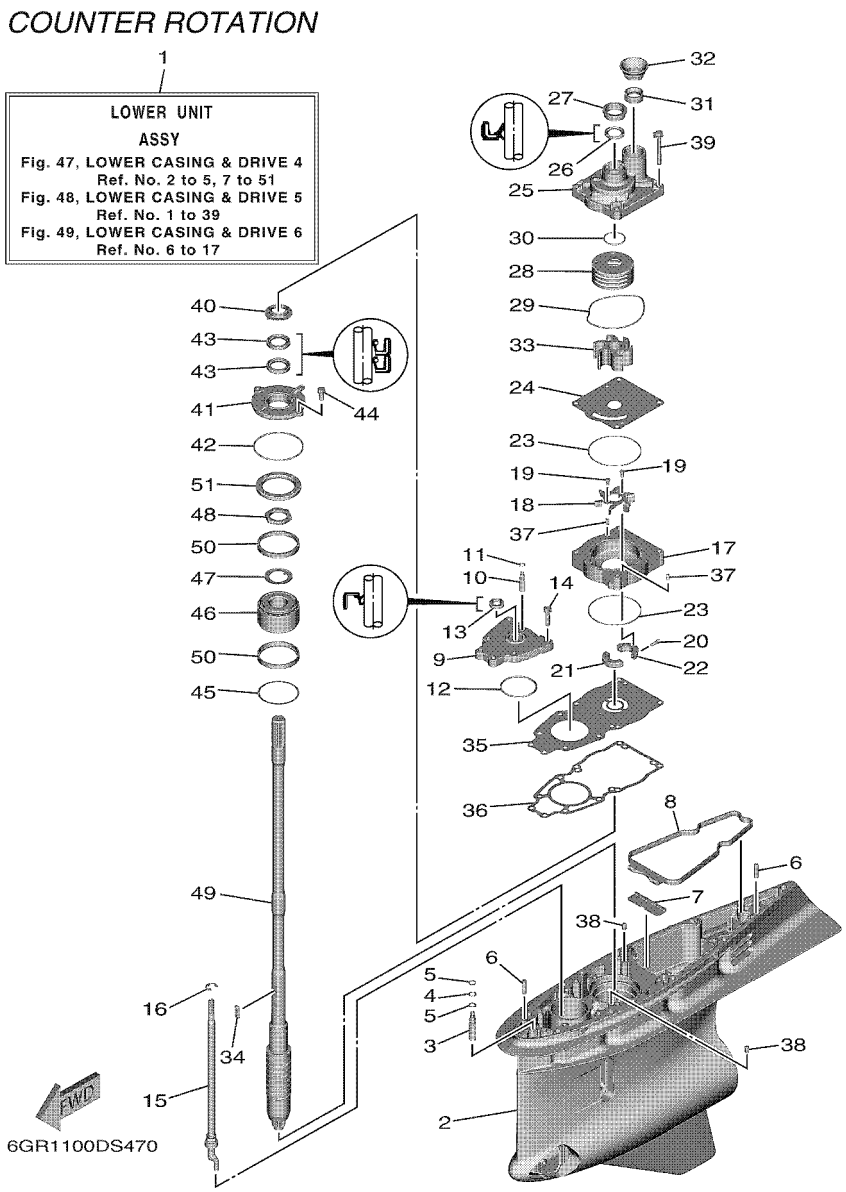

FIG. 47 LOWER CASING & DRIVE 4

REF. NO.	PART NO.	DESCRIPTION	NSA	NSA2	NSA7			REMARKS
1	6GS–45300–00–8D	LOWER UNIT ASSY	1					GRAY, X(25.2")
	6GS–45300–00–CE	LOWER UNIT ASSY		1	1			WHITE, X(25.2")
	6GS–45300–10–8D	LOWER UNIT ASSY	1					GRAY, U(30.2")
	6GS–45300–10–CE	LOWER UNIT ASSY		1	1			WHITE, U(30.2")
	6GS–45300–20–8D	LOWER UNIT ASSY	1					GRAY, E(35.2")
	6GS–45300–20–CE	LOWER UNIT ASSY		1	1			WHITE, E(35.2")
2	6GR–45311–00–8D	CASING, LOWER	1					GRAY
	6GR–45311–00–CE	CASING, LOWER		1	1			WHITE
3	6GR–45308–00	VALVE ASSY 1	1	1	1			
4	93210–10010	O-RING	1	1	1			
5	6GR–43873–00	RING, BACK UP	2	2	2			
6	99480–08030	PIN	2	2	2			
7	6GR–45376–00	GUIDE, SEAL DAMPER	1	1	1			
8	6GR–45375–00	DAMPER, SEAL	1	1	1			
9	6GR–45321–00	PLATE	1	1	1			
10	6GR–45309–00	VALVE ASSY 2	1	1	1			
11	93210–07100	O-RING	1	1	1			
12	93210–64488	O-RING	1	1	1			
13	93106–14001	OIL SEAL	1	1	1			
14	97595–08535	BOLT, WITH WASHER	6	6	6			
15	6GS–44150–00	SHIFT CAM ASSY	1	1	1			UR X(25.2")
	6GS–44150–10	SHIFT CAM ASSY	1	1	1			UR U(30.2")
	6GS–44150–20	SHIFT CAM ASSY	1	1	1			UR E(35.2")
16	99002–12600	CIRCLIP	1	1	1			
17	6GR–44341–00	HOUSING, WATER PUMP	1	1	1			
18	6GR–12451–00	IMPELLER, WATER PUMP	1	1	1			
19	97095–05010	BOLT	2	2	2			

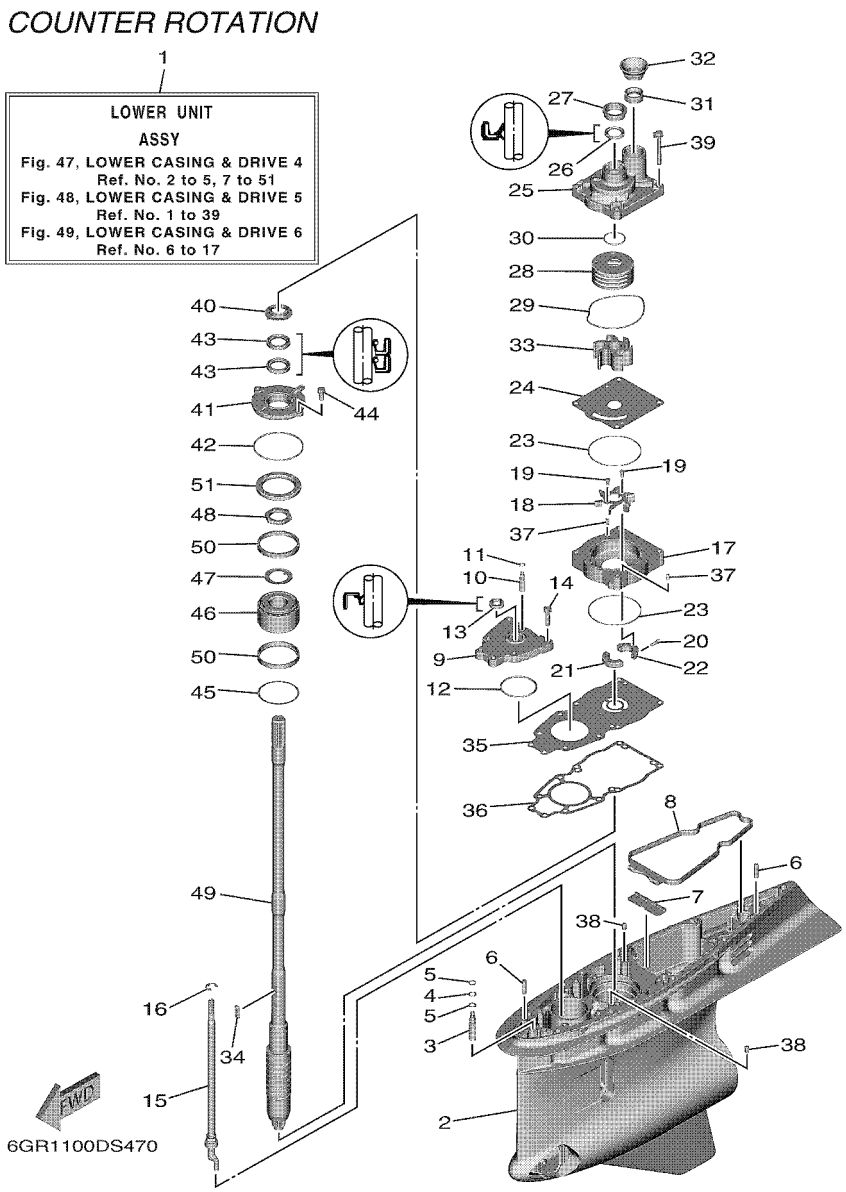

FIG. 47 LOWER CASING & DRIVE 4

REF. NO.	PART NO.	DESCRIPTION	NSA	NSA2	NSA7			REMARKS
20	91380–05016	BOLT	2	2	2			
21	6GR–44381–00	SPACER 1	1	1	1			
22	6GR–44382–00	SPACER 2	1	1	1			
23	93210–97690	O-RING	2	2	2			
24	6GR–44323–00	OUTER PLATE, CARTRIDGE	1	1	1			
25	6GR–44311–00	HOUSING, WATER PUMP	1	1	1			
26	93109–26001	OIL SEAL	1	1	1			
27	6GR–44312–00	COVER, WATER PUMP HOUSING	1	1	1			
28	6GR–44322–00	INSERT, CARTRIDGE	1	1	1			
29	93211–08001	O-RING	1	1	1			
30	93210–37160	O-RING	1	1	1			
31	6GR–44365–00	DAMPER, WATER SEAL 1	1	1	1			
32	6GR–44379–00	GUIDE, WATER TUBE	1	1	1			
33	6GR–44352–00	IMPELLER	1	1	1			
34	6AW–44336–00	KEY	1	1	1			
35	6GR–44328–00	PLATE	1	1	1			
36	6GR–44315–00	GASKET, WATER PUMP	1	1	1			
37	93606–12019	PIN, DOWEL	2	2	2			
38	93608–12M05	PIN, DOWEL	2	2	2			
39	90119–08M16	BOLT, WITH WASHER	4	4	4			
40	6GR–45344–00	COVER, OIL SEAL	1	1	1			
41	6GR–45335–00	HOUSING, OIL SEAL	1	1	1			
42	93210–89535	O-RING	1	1	1			
43	93101–30018	OIL SEAL	2	2	2			
44	97595–08520	BOLT, WITH WASHER	2	2	2			
45	688–45567–01	SHIM (T:0.10MM)	1	1	1			UR
	688–45567–10	SHIM (T:0.12MM)	1	1	1			UR

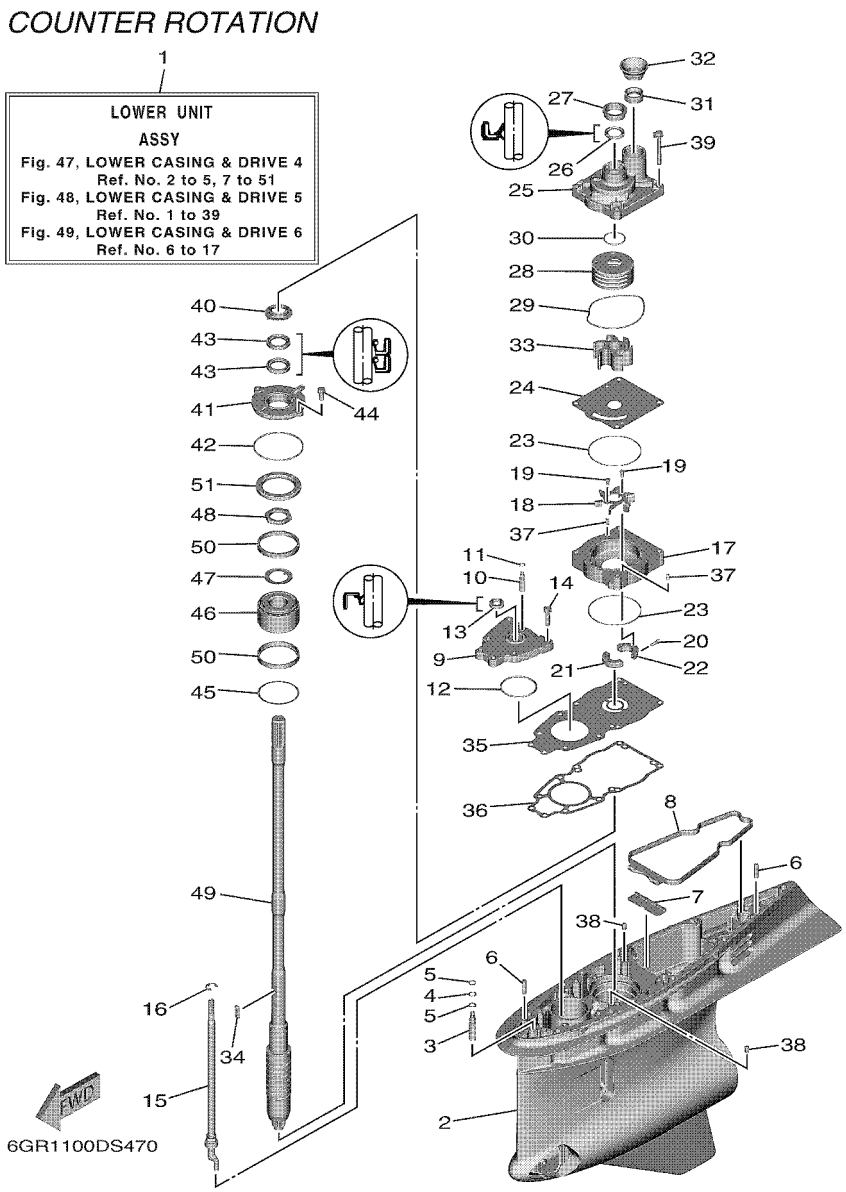

FIG. 47 LOWER CASING & DRIVE 4

REF. NO.	PART NO.	DESCRIPTION	NSA	NSA2	NSA7			REMARKS
45	688–45567–20	SHIM (T:0.15MM)	1	1	1			UR
	688–45567–30	SHIM (T:0.18MM)	1	1	1			UR
	688–45567–40	SHIM (T:0.30MM)	1	1	1			UR
	688–45567–50	SHIM (T:0.40MM)	1	1	1			UR
	688–45567–60	SHIM (T:0.50MM)	1	1	1			UR
46	93399–99967	BEARING	1	1	1			
47	90214–35M07	WASHER, CLAW	1	1	1			
48	90170–35M34	NUT	1	1	1			
49	6GR–45501–00	DRIVE SHAFT COMP.	1	1	1			UR X(25.2")
	6GR–45501–10	DRIVE SHAFT COMP.	1	1	1			UR U(30.2")
	6GR–45501–20	DRIVE SHAFT COMP.	1	1	1			UR E(35.2")
50	6GR–45539–00	SPACER 2	2	2	2			
51	6GR–45244–00	NUT	1	1	1			

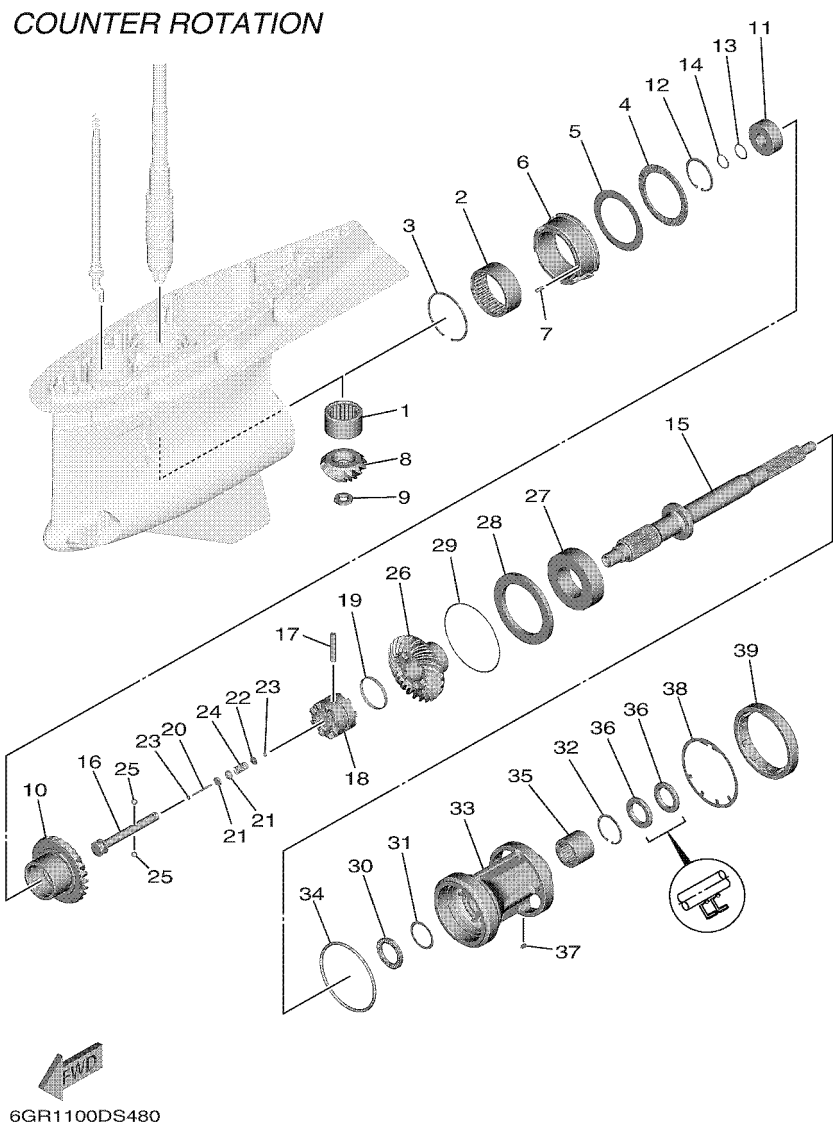

FIG. 48 LOWER CASING & DRIVE 5

REF. NO.	PART NO.	DESCRIPTION	NSA	NSA2	NSA7			REMARKS
1	93311–944A0	BEARING	1	1	1			
2	93311–675A1	BEARING	1	1	1			
3	93450–92171	CIRCLIP	1	1	1			
4	93340–69012	BEARING	1	1	1			
5	6GR–45567–00	SHIM (T:2.00MM)	1	1	1			UR
	6GR–45567–10	SHIM (T:2.03MM)	1	1	1			UR
	6GR–45567–20	SHIM (T:2.06MM)	1	1	1			UR
	6GR–45567–30	SHIM (T:2.09MM)	1	1	1			UR
	6GR–45567–40	SHIM (T:2.12MM)	1	1	1			UR
	6GR–45567–50	SHIM (T:2.15MM)	1	1	1			UR
	6GR–45567–60	SHIM (T:2.18MM)	1	1	1			UR
	6GR–45567–70	SHIM (T:2.21MM)	1	1	1			UR
6	6GR–45824–00	ADAPTER	1	1	1			
7	93606–16117	PIN, DOWEL	1	1	1			
8	6GR–45551–00	PINION (14T)	1	1	1			
9	90170–18009	NUT	1	1	1			
10	6GS–45561–00	GEAR 1 (25T)	1	1	1			
11	93390–00033	BEARING	1	1	1			
12	99009–62500	CIRCLIP	1	1	1			
13	90201–253K0	WASHER, PLATE (T=1.0)	1	1	1			
14	93440–25020	CIRCLIP	1	1	1			
15	6GS–45611–00	SHAFT, PROPELLER	1	1	1			
16	6GR–45634–00	SLIDE, SHIFT	1	1	1			
17	6GR–45632–00	PIN, CROSS	1	1	1			
18	6GR–45631–00	CLUTCH, DOG	1	1	1			
19	6GR–45633–00	RING, CROSS PIN	1	1	1			
20	6H1–45668–00	SHAFT, FREE 1	1	1	1			

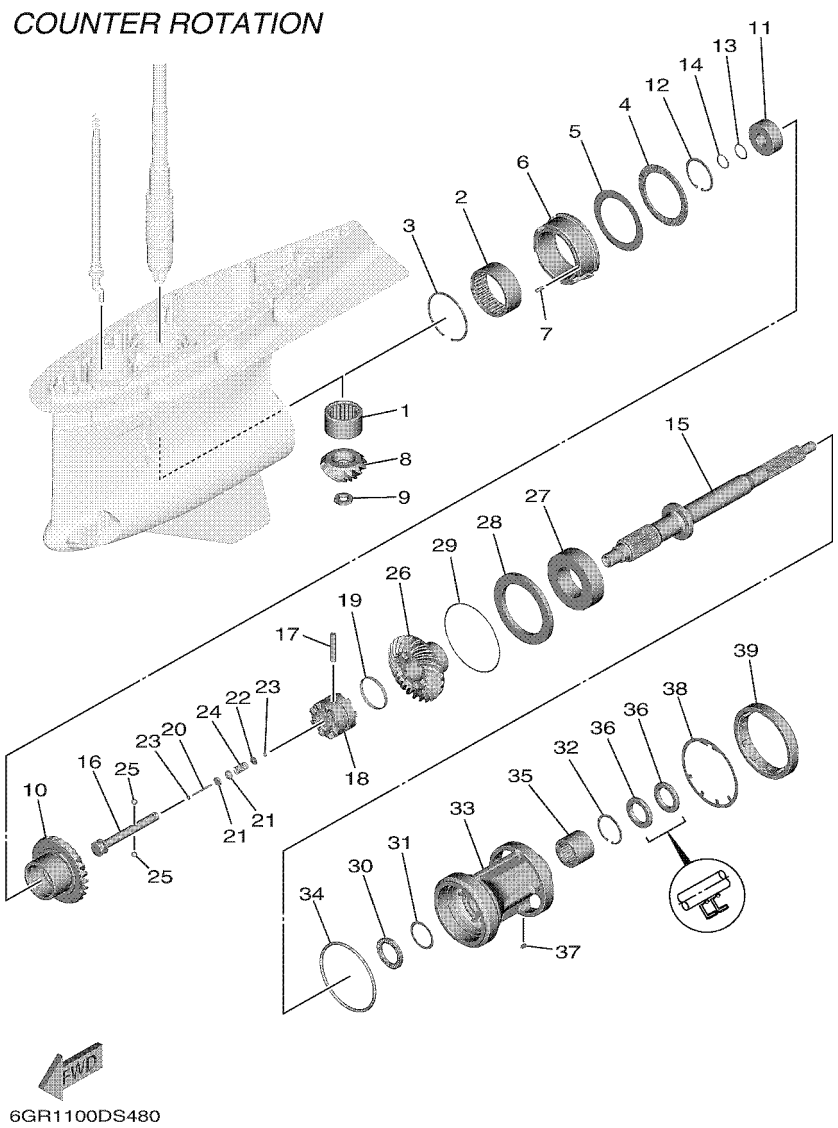

FIG. 48 LOWER CASING & DRIVE 5

REF. NO.	PART NO.	DESCRIPTION	NSA	NSA2	NSA7			REMARKS
21	61A–45635–00	PLUNGER, SHIFT	2	2	2			
22	90201–02M00	WASHER, PLATE	1	1	1			
23	90183–02M03	NUT, SPRING	2	2	2			
24	90501–10M77	SPRING, COMPRESSION	1	1	1			
25	93501–04011	BALL	2	2	2			
26	6GS–45571–00	GEAR 2 (25T)	1	1	1			
27	93332–000B2	BEARING	1	1	1			
28	6GR–45576–00	WASHER, THRUST 2	1	1	1			
29	6GR–45577–00	SHIM (T:0.10MM)	1	1	1			UR
	6GR–45577–10	SHIM (T:0.12MM)	1	1	1			UR
	6GR–45577–20	SHIM (T:0.15MM)	1	1	1			UR
	6GR–45577–30	SHIM (T:0.18MM)	1	1	1			UR
	6GR–45577–40	SHIM (T:0.30MM)	1	1	1			UR
	6GR–45577–50	SHIM (T:0.40MM)	1	1	1			UR
	6GR–45577–60	SHIM (T:0.50MM)	1	1	1			UR
30	93341–440U5	BEARING	1	1	1			
31	6K1–45578–01	SHIM (T:0.10MM)	1	1	1			UR
	6K1–45578–10	SHIM (T:0.12MM)	1	1	1			UR
	6K1–45578–20	SHIM (T:0.15MM)	1	1	1			UR
	6K1–45578–30	SHIM (T:0.18MM)	1	1	1			UR
	6K1–45578–40	SHIM (T:0.30MM)	1	1	1			UR
	6K1–45578–50	SHIM (T:0.40MM)	1	1	1			UR
	6K1–45578–60	SHIM (T:0.50MM)	1	1	1			UR
32	99009–55500	CIRCLIP	1	1	1			
33	6GS–45332–00	HOUSING, BEARING	1	1	1			
34	93211–26001	O-RING	1	1	1			
35	93311–737A2	BEARING	1	1	1			

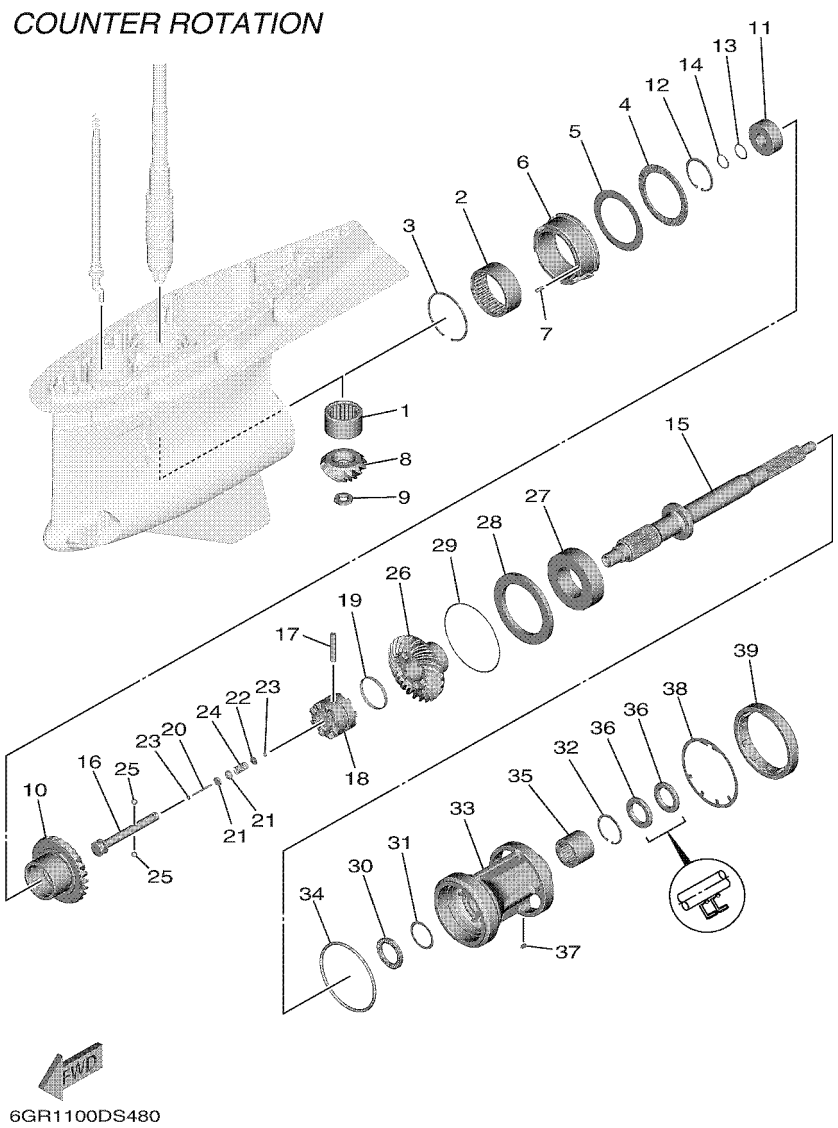

FIG. 48 LOWER CASING & DRIVE 5

REF. NO.	PART NO.	DESCRIPTION	NSA	NSA2	NSA7			REMARKS
36	93101–37001	OIL SEAL	2	2	2			
37	90282–05008	KEY, STRAIGHT	1	1	1			
38	6GR–45383–00	WASHER, CLAW	1	1	1			
39	6GR–45384–00	NUT	1	1	1			

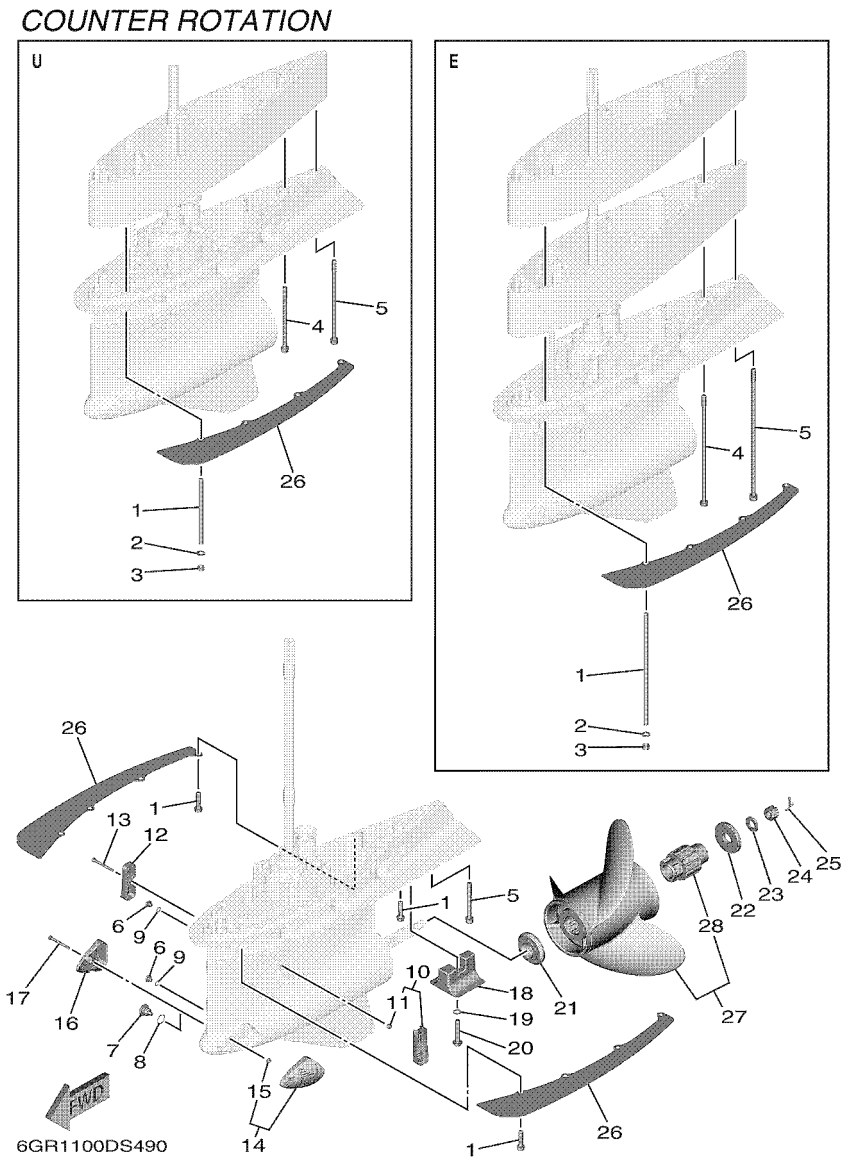

FIG. 49 LOWER CASING & DRIVE 6

REF. NO.	PART NO.	DESCRIPTION	NSA	NSA2	NSA7			REMARKS
1	90119–10024	BOLT, WITH WASHER	9	9	9			UR X(25.2")
	90116–10067	BOLT, STUD	8	8	8			UR U(30.2")
	90116–10066	BOLT, STUD	8	8	8			UR E(35.2")
2	92995–10600	WASHER	8	8	8			U(30.2"),E(35.2")
3	95380–10600	NUT	8	8	8			U(30.2"),E(35.2")
4	90119–10009	BOLT, WITH WASHER	1	1	1			UR U(30.2")
	90119–10060	BOLT, WITH WASHER	1	1	1			UR E(35.2")
5	90110–10048	BOLT, HEXAGON SOCKET HEAD	1	1	1			UR X(25.2")
	90110–10049	BOLT, HEXAGON SOCKET HEAD	1	1	1			UR U(30.2")
	90110–10050	BOLT, HEXAGON SOCKET HEAD	1	1	1			UR E(35.2")
6	90340–08003	PLUG, STRAIGHT SCREW	2	2	2			
7	6GR–45341–00	PLUG, DRAIN	1	1	1			
8	93210–19123	O-RING	1	1	1			
9	93210–09165	O-RING	2	2	2			
10	6GR–45214–00	COVER, WATER INLET 1	1	1	1			
11	90185–06M07	.NUT, SELF-LOCKING	1	1	1			
12	6GR–45215–00	COVER, WATER INLET 2	1	1	1			
13	90110–06425	BOLT, HEXAGON SOCKET HEAD	1	1	1			
14	6GR–45224–00	COVER, WATER INLET 3	1	1	1			
15	90185–06M07	.NUT, SELF-LOCKING	1	1	1			
16	6GR–45225–00	COVER, WATER INLET 4	1	1	1			
17	90110–06425	BOLT, HEXAGON SOCKET HEAD	1	1	1			
18	6AW–45373–00	ANODE	1	1	1			
19	92990–10300	WASHER	1	1	1			
20	90105–10257	BOLT, FLANGE	1	1	1			
21	6GR–45987–00	SPACER 1	1	1	1			
22	6GR–45997–00	SPACER 2	1	1	1			

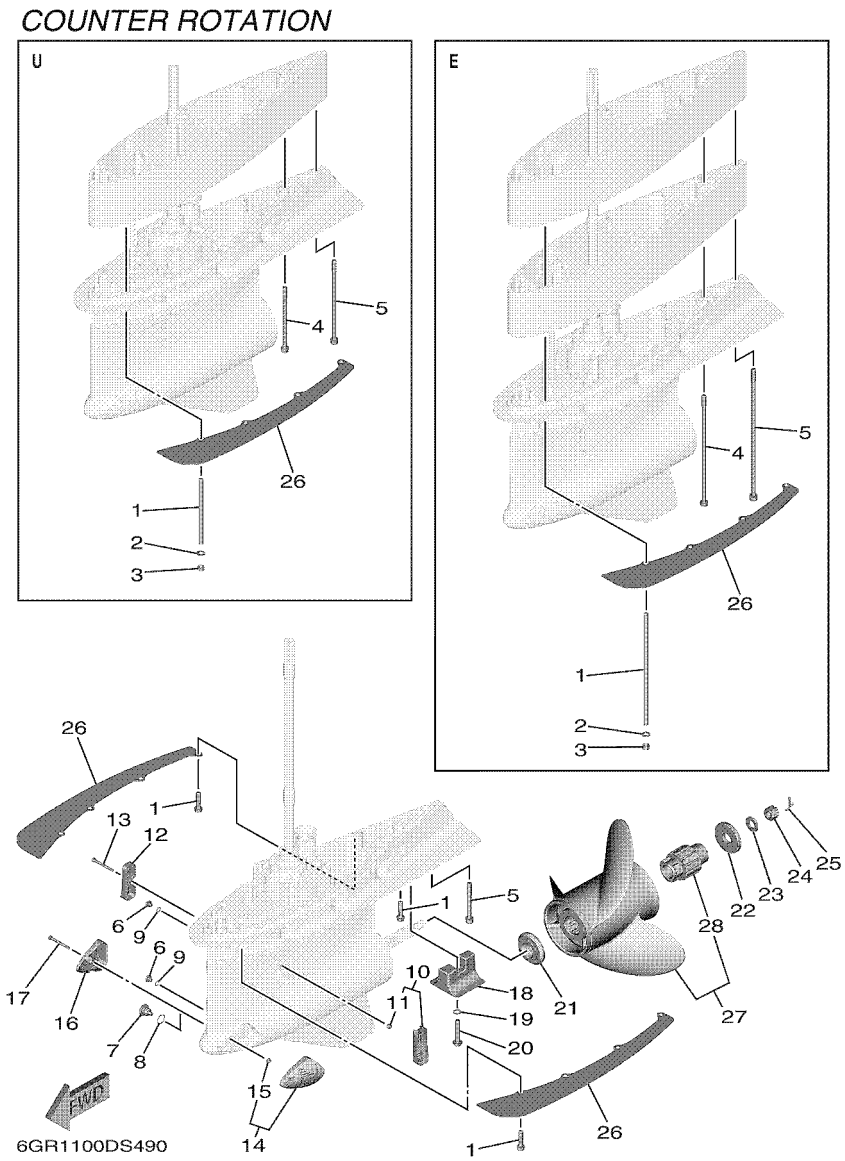

FIG. 49 LOWER CASING & DRIVE 6

REF. NO.	PART NO.	DESCRIPTION	NSA	NSA2	NSA7			REMARKS
23	90201–19M01	WASHER, PLATE	1	1	1			
24	90171–18M04	NUT, CASTLE	1	1	1			
25	91490–40030	PIN. COTTER	1	1	1			
26	6GR–45158–00–8D	PLATE, SPLASH	2					GRAY
	6GR–45158–00–CE	PLATE, SPLASH		2	2			WHITE
27	6GS–45970–10	PROPELLER (3X17-1/8"X15"-YL)	1	1	1			UR
	6GS–45972–10	PROPELLER (3X16-7/8"X17"-YL)	1	1	1			UR
	6GS–45974–10	PROPELLER (3X16-5/8"X19"-YL)	1	1	1			UR
	6GS–45976–10	PROPELLER (3X16-3/8"X21"-YL)	1	1	1			UR
	6GS–45978–10	PROPELLER (3X16-1/8"X23"-YL)	1	1	1			UR
	6GS–45930–10	PROPELLER (3X16"X25"-YL)	1	1	1			UR
	6GS–45938–10	PROPELLER (3X16-5/8"X18"-YL)	1	1	1			UR
	6GS–45936–10	PROPELLER (3X16-3/8"X20"-YL)	1	1	1			UR
	6GS–45934–10	PROPELLER (3X16-1/8"X22"-YL)	1	1	1			UR
28	6GR–45C81–10	.DAMPER RUBBER, PROPELLER 1	1	1	1			

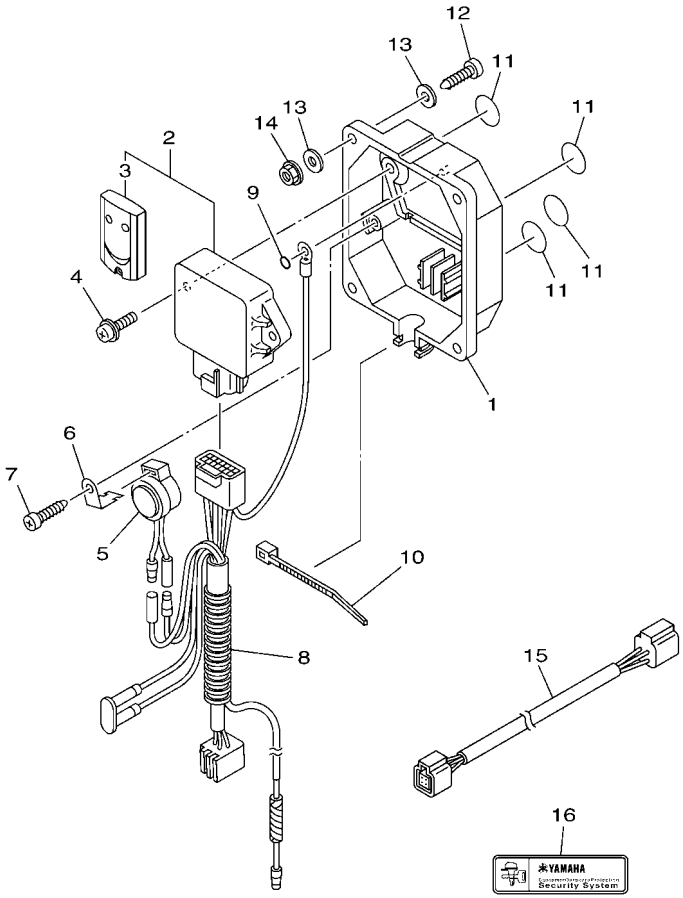

6CJ1100-K370

FIG. 50 OPTIONAL PARTS

REF. NO.	PART NO.	DESCRIPTION	NSA	NSA2	NSA7			REMARKS
1	6Y8–86267–00	CASE COMPLETE 1	1	1	1			
2	6Y8–86260–12	REMOTE CONTROL UNIT ASSY	1	1	1			UR 315MHz
	6Y8–86260–03	REMOTE CONTROL UNIT ASSY	1	1	1			UR 433MHz
3	6AA–86261–22	.XMTR. COMP.	2	2	2			UR FOR 315MHz
	6AA–86261–01	.XMTR. COMP.	2	2	2			UR FOR 433MHz
4	97980–06216	SCREW, WITH WASHER	2	2	2			
5	6X4–83383–00	BUZZER	1	1	1			
6	6X4–83386–00	STAY, BUZZER	1	1	1			
7	97780–60620	SCREW, TAPPING	1	1	1			
8	6Y8–82509–10	WIRE, SUB LEAD	1	1	1			
9	93210–04279	O-RING	1	1	1			
10	90465–11M10	CLAMP	1	1	1			
11	6Y8–8454G–00	PATCH 1	4	4	4			
12	90167–06M00	SCREW, TAPPING	4	4	4			UR
	97880–06035	SCREW, PAN HEAD	4	4	4			UR
13	90201–06M30	WASHER, PLATE	8	8	8			
14	95780–06300	NUT, FLANGE	4	4	4			
15	6Y8–82521–11	2FT PIGTAIL BUS	1	1	1			
16	6Y8–48277–00	STICKER 1	4	4	4			

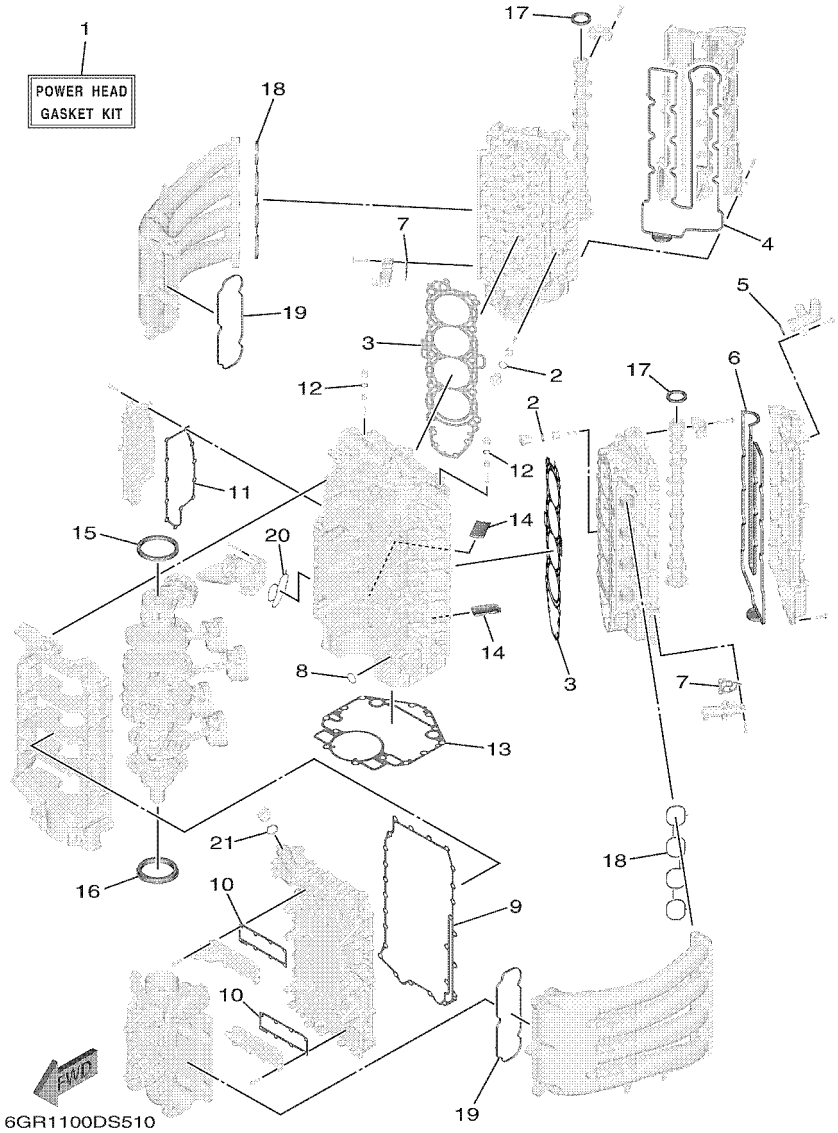

FIG. 51 REPAIR KIT 1

REF. NO.	PART NO.	DESCRIPTION	NSA	NSA2	NSA7			REMARKS
1	6GR–W0001–00	POWER HEAD GASKET KIT	1	1	1			
2	93210–19216	.O-RING	6	6	6			
3	6GR–11181–00	.GASKET, CYLINDER HEAD 1	2	2	2			
4	6GR–11193–00	.GASKET, HEAD COVER 1	1	1	1			
5	93210–28646	.O-RING	1	1	1			
6	6GR–11194–00	.GASKET, HEAD COVER 2	1	1	1			
7	6CB–1242F–00	.GASKET, FILTER	2	2	2			
8	93210–26658	.O-RING	1	1	1			
9	6GR–15451–00	.GASKET, CRANKCASE COVER 1	1	1	1			
10	6GR–1131B–00	.GASKET, COVER	2	2	2			
11	6GR–15353–00	.GASKET, DRAIN	1	1	1			
12	93210–13M63	.O-RING	2	2	2			
13	6GR–11351–00	.GASKET, CYLINDER	1	1	1			
14	6GR–14664–00	.GROMMET, WATER SHUT	2	2	2			
15	93102–90004	.OIL SEAL	1	1	1			
16	93102–85010	.OIL SEAL	1	1	1			
17	93102–38008	.OIL SEAL	2	2	2			
18	6GR–13645–00	.GASKET, MANIFOLD 1	2	2	2			
19	6GR–13646–00	.GASKET, MANIFOLD 2	2	2	2			
20	6GR–13477–00	.GASKET	1	1	1			
21	93210–24M79	.O-RING	1	1	1			

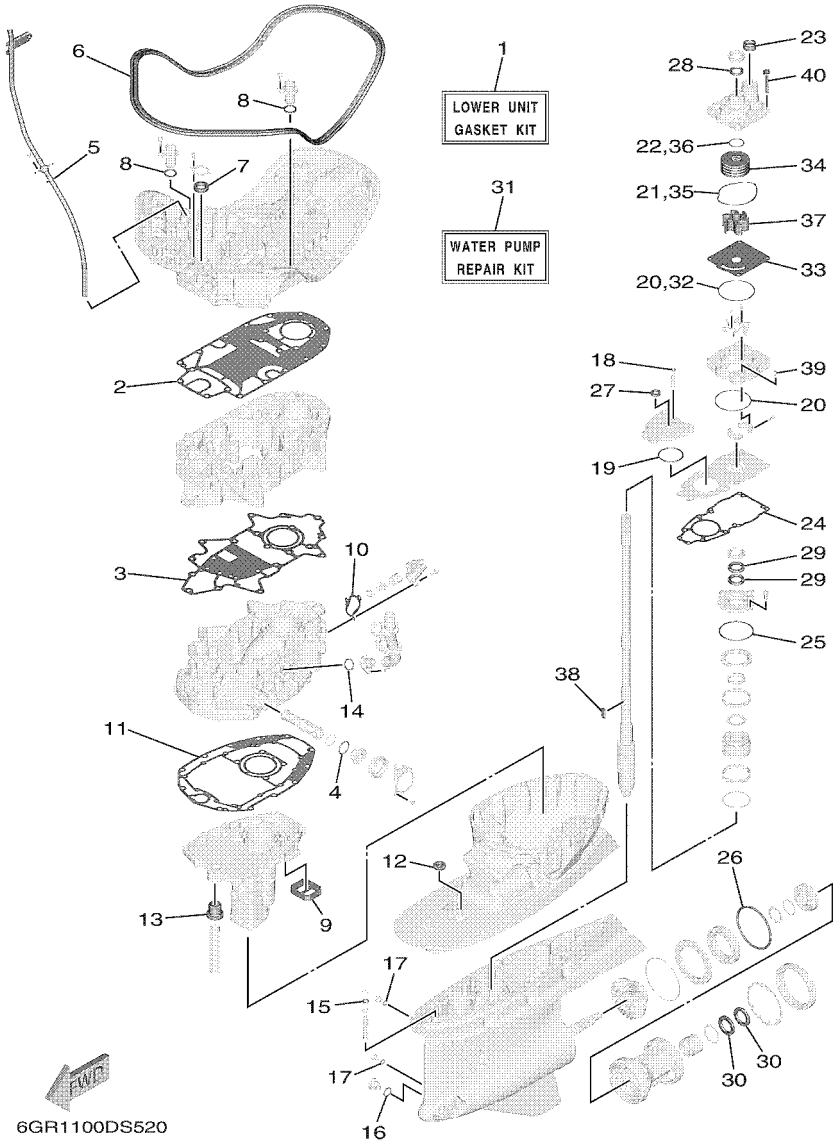

FIG. 52 REPAIR KIT 2

REF. NO.	PART NO.	DESCRIPTION	NSA	NSA2	NSA7			REMARKS
1	6GR–W0001–20	LOWER UNIT GASKET KIT	1	1	1			
2	6GR–15312–00	.GASKET, OIL PAN	1	1	1			
3	6GR–1531C–00	.GASKET, OIL PAN 2	1	1	1			
4	93210–34633	.O-RING	1	1	1			
5	93210–19MJ3	.O-RING	1	1	1			
6	6GR–42716–00	.RUBBER SEAL 1	1	1	1			
7	93102–26004	.OIL SEAL	1	1	1			
8	6GR–44366–00	.DAMPER, WATER SEAL 2	2	2	2			
9	6GR–45127–00	.SEAL	1	1	1			
10	6EK–12435–A0	.GASKET	1	1	1			
11	6GR–45113–00	.GASKET, UPPER CASING	1	1	1			
12	6GR–44521–00	.SEAL	1	1	1			
13	6GR–44367–00	.DAMPER, WATER SEAL 3	1	1	1			
14	6GR–44366–00	.DAMPER, WATER SEAL 2	2	2	2			
15	93210–10010	.O-RING	1	1	1			
16	93210–19123	.O-RING	1	1	1			
17	93210–09165	.O-RING	2	2	2			
18	93210–07100	.O-RING	1	1	1			
19	93210–64488	.O-RING	1	1	1			
20	93210–97690	.O-RING	2	2	2			
21	93211–08001	.O-RING	1	1	1			
22	93210–37160	.O-RING	1	1	1			
23	6GR–44365–00	.DAMPER, WATER SEAL 1	1	1	1			
24	6GR–44315–00	.GASKET, WATER PUMP	1	1	1			
25	93210–89535	.O-RING	1	1	1			
26	93211–26001	.O-RING	1	1	1			
27	93106–14001	.OIL SEAL	1	1	1			

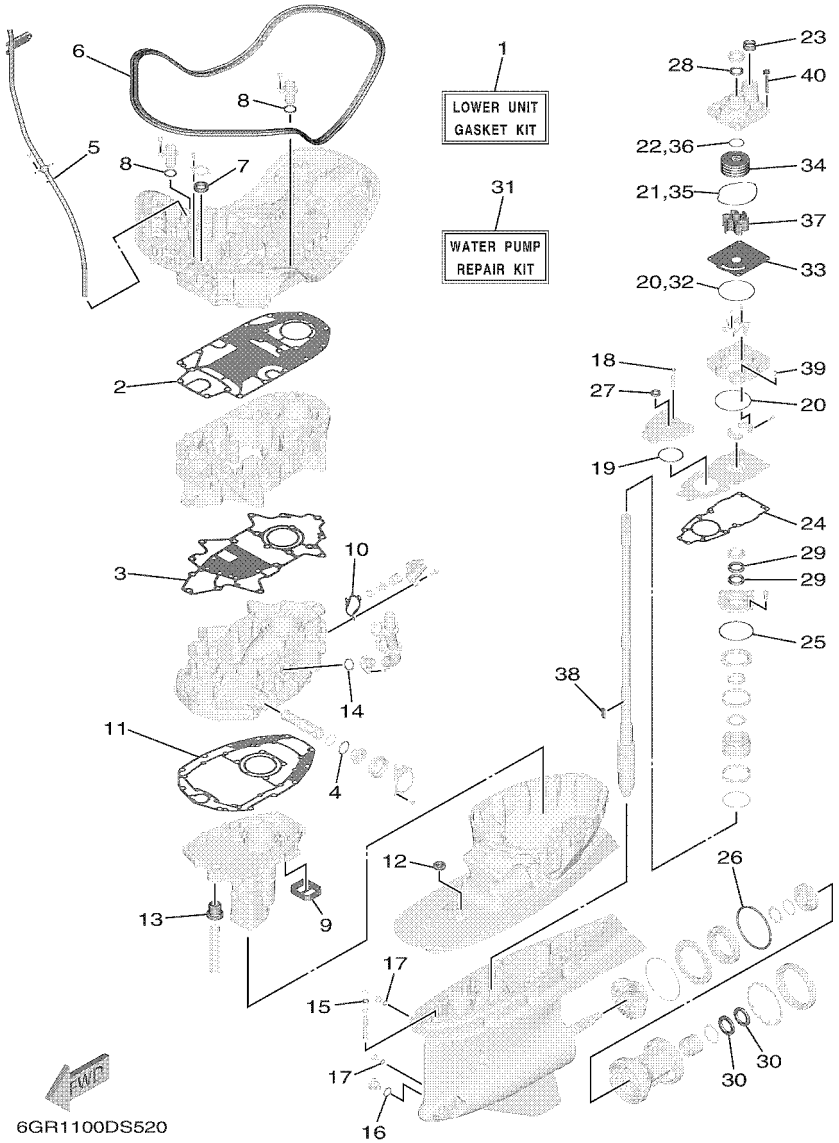

FIG. 52 REPAIR KIT 2

REF. NO.	PART NO.	DESCRIPTION	NSA	NSA2	NSA7			REMARKS
28	93109–26001	.OIL SEAL	1	1	1			
29	93101–30018	.OIL SEAL	2	2	2			
30	93101–37001	.OIL SEAL	2	2	2			
31	6GR–W0078–00	WATER PUMP REPAIR KIT	1	1	1			
32	93210–97690	.O-RING	1	1	1			
33	6GR–44323–00	.OUTER PLATE, CARTRIDGE	1	1	1			
34	6GR–44322–00	.INSERT, CARTRIDGE	1	1	1			
35	93211–08001	.O-RING	1	1	1			
36	93210–37160	.O-RING	1	1	1			
37	6GR–44352–00	.IMPELLER	1	1	1			
38	6AW–44336–00	.KEY	1	1	1			
39	93606–12019	.PIN, DOWEL	2	2	2			
40	90119–08M16	.BOLT, WITH WASHER	4	4	4			

PART NO.	REF. NO.
6GR–11000–00	4 – 1
6GR–11110–00	6 – 2
6GR–11120–00	6 – 12
6DA–11133–10	6 – 3
	6 – 13
6GR–11135–00	7 – 2
6GR–11136–00	7 – 10
6GR–11181–00	6 – 25
	51 – 3
6GR–11186–00	23 – 22
6GR–11187–00	23 – 28
6GR–11191–00–9S	7 – 1
6GR–11192–00–9S	7 – 6
6GR–11193–00	7 – 4
	51 – 4
6GR–11194–00	7 – 12
	51 – 6
6GR–11197–00	6 – 21
6G8–11197–A0	4 – 38
	14 – 4
	15 – 8
6GR–1131B–00	4 – 20
	51 – 10
6G8–11325–00	1 – 4
	1 – 8
	1 – 9
	4 – 37
	14 – 6
	15 – 10
6AW–1132L–00	1 – 1
	6 – 23
6AW–1132P–00	1 – 2
	4 – 31
6GR–11351–00	4 – 43
	51 – 13
6GR–1135A–00	4 – 41
6GR–11372–00	7 – 7
6GR–11411–00	5 – 1
6GR–11416–00	5 – 11
6GR–11416–10	5 – 11
6GR–11416–20	5 – 11
6GR–11416–30	5 – 11
6GR–11417–00	5 – 12
6GR–11417–10	5 – 12
6GR–11417–20	5 – 12
6GR–11417–30	5 – 12
6GR–11426–00	5 – 15
6CB–11426–03	5 – 13

PART NO.	REF. NO.
6GR–11427–00	5 – 16
6CB–11427–03	5 – 14
6GR–11567–00	10 – 6
6P2–11590–01	10 – 16
6GR–115A0–00	10 – 5
6GR–11603–00	5 – 20
6GR–11631–00	5 – 19
6GR–11633–00	5 – 21
6GR–11634–00	5 – 22
63P–11654–10	5 – 18
6GR–11656–00	5 – 23
6GR–11656–10	5 – 23
6GR–11656–20	5 – 23
6GR–11927–00	7 – 19
6GR–12111–00	9 – 1
6CB–12113–00	9 – 4
51Y–12119–00	9 – 7
6DX–12121–00	9 – 2
6GR–12145–00	9 – 8
6GR–12145–10	9 – 8
6GR–12145–20	9 – 8
6GR–12145–30	9 – 8
6GR–12145–40	9 – 8
6GR–12145–50	9 – 8
6GR–12145–60	9 – 8
6GR–12153–00	9 – 8
6GR–12153–10	9 – 8
6GR–12153–20	9 – 8
6GR–12153–30	9 – 8
6GR–12153–40	9 – 8
6GR–12153–50	9 – 8
6GR–12153–60	9 – 8
6GR–12153–70	9 – 8
6GR–12153–80	9 – 8
6GR–12153–90	9 – 8
6GR–12153–A0	9 – 8
6GR–12153–B0	9 – 8
6GR–12153–C0	9 – 8
6GR–12153–D0	9 – 8
6GR–12153–E0	9 – 8
6GR–12153–F0	9 – 8
6GR–12153–G0	9 – 8
6GR–12153–H0	9 – 8
6GR–12153–J0	9 – 8
6GR–12153–K0	9 – 8
6GR–12153–L0	9 – 8
6GR–12153–M0	9 – 8
6GR–12153–N0	9 – 8

PART NO.	REF. NO.
6GR–12153–P0	9 – 8
6GR–12153–R0	9 – 8
6GR–12153–S0	9 – 8
6GR–12153–T0	9 – 8
6GR–12171–00	10 – 1
6GR–12172–00	10 – 3
6GR–12181–00	10 – 2
6GR–12182–00	10 – 4
6GR–12199–00	5 – 8
6GR–12210–00	10 – 12
6GR–12230–00	10 – 13
6GR–12411–00	1 – 3
	4 – 33
66M–12411–01	1 – 19
	4 – 25
6H3–12411–20	1 – 18
	4 – 17
688–12412–00	4 – 26
6GR–12412–00	4 – 34
6H3–12412–10	4 – 18
6GR–12413–00	4 – 35
6G5–12416–00	43 – 22
6GR–12417–00–9S	4 – 22
6GR–1241B–00–9S	4 – 29
6CB–1242F–00	7 – 15
	51 – 7
6EK–12435–A0	43 – 28
	52 – 10
6GR–12439–00	19 – 13
6GR–1243A–00	8 – 8
6GR–1243E–00	8 – 9
6GR–1243F–00	43 – 31
6GR–1244H–00	8 – 13
6GR–1244J–00	8 – 1
6GR–12451–00	44 – 18
	47 – 18
6EK–1246A–00–9S	43 – 21
6GR–12482–00	15 – 23
6GR–12491–00	42 – 12
6GR–12551–00	8 – 6
6R3–12572–00	29 – 11
6GR–12577–00	29 – 16
6GR–1257A–00	43 – 32
6GR–12581–00	43 – 33
6R3–12581–00	29 – 13
6GR–12582–00	29 – 14
6R3–12583–00	29 – 15
6GR–12584–00	40 – 19

PART NO.	REF. NO.
6GR–12594–00	8 – 12
6GR–12645–00	10 – 8
6GR–12651–00	21 – 10
6GR–12653–00	21 – 13
6GR–12659–00	21 – 15
6GR–13016–00	19 – 7
6GR–13160–09	19 – 20
6GR–13188–00	5 – 4
6GR–13300–00	13 – 1
6GR–13411–00	1 – 6
	43 – 15
6GR–13437–60	21 – 27
N26–13440–02	1 – 7
	13 – 3
6GR–13446–00	13 – 5
67F–13448–00	2 – 18
	3 – 17
6GR–13473–00	13 – 11
6GR–13477–00	13 – 6
	51 – 20
6GR–13490–00	13 – 10
6GR–13556–00	12 – 9
68V–13577–00	16 – 18
6CB–13593–00	16 – 15
6GR–13593–00	16 – 9
6GR–13641–00	11 – 7
63P–13643–00	12 – 8
6GR–13645–00	11 – 8
	51 – 18
6GR–13646–00	11 – 9
	51 – 19
6GR–13711–00	12 – 3
6GR–13716–00	16 – 16
6GR–13750–00	12 – 1
6GR–13751–00	12 – 2
6GR–13761–00	19 – 21
6GR–13781–00	16 – 5
6GR–13898–00	12 – 4
6GR–13910–00	19 – 12
6GR–13938–00	16 – 8
6GR–14197–00	16 – 17
6GR–14295–00	19 – 17
6GR–14296–00	19 – 18
6AW–1441J–00	11 – 3
6GR–14440–00	11 – 1
6FM–14562–00	16 – 14
6GR–14567–00	16 – 19
6GR–14613–00	14 – 3

PART NO.	REF. NO.
6GR–14615–00–9S	14 – 1
6GR–14625–00–9S	14 – 2
6GR–14635–00–9S	15 – 1
6GR–14643–00	15 – 16
6GR–14645–00–9S	15 – 4
6GR–14656–00–9S	15 – 14
6GR–14664–00	4 – 44
	51 – 14
6GR–14711–00	41 – 1
6GR–14753–00	40 – 26
6GR–15109–00–9S	4 – 2
6P2–15187–00	4 – 7
6GR–15311–00	43 – 8
6GR–15312–00	43 – 1
	52 – 2
6GR–15316–00	43 – 20
6GR–1531A–00	11 – 12
6GR–1531A–10	11 – 13
6GR–1531B–00	43 – 2
6GR–1531C–00	43 – 3
	52 – 3
6GR–15351–00	43 – 12
6GR–15353–00	4 – 27
	51 – 11
6GR–15362–00	43 – 16
6G8–15363–00	13 – 8
6GR–15377–00	43 – 17
6GR–15411–00–9S	4 – 11
6GR–15413–00–9S	4 – 24
6GR–15414–00–9S	4 – 16
6GR–15423–00–9S	4 – 19
6GR–15451–00	4 – 13
	51 – 9
6GR–2153A–00	2 – 23
6GR–2153B–00	2 – 24
6GR–21841–00	16 – 13
6GR–22472–00	38 – 28
6GR–23113–00	39 – 48
6GR–2318F–00	42 – 8
6GR–2318K–00	27 – 8
6GR–24113–00	16 – 22
6GR–2415H–00	16 – 23
6GR–24196–00	16 – 10
6GR–2419A–00	16 – 11
6GR–24217–00	18 – 11
6GR–24218–00	16 – 4
6GR–24220–00	16 – 1
6GR–24223–00	16 – 2

PART NO.	REF. NO.
6GR–24224–00	16 – 3
6GR–24251–00	19 – 5
6AW–24300–00	18 – 8
	19 – 8
6P2–24300–00	17 – 37
6AW–24300–10	16 – 21
	18 – 7
6GR–24311–00	17 – 3
6GR–24312–00	17 – 16
6GR–24313–00	18 – 1
6GR–24314–00	18 – 2
6GR–24315–00	18 – 3
6GR–24316–00	18 – 4
6GR–24317–00	18 – 5
6GR–24321–00	17 – 19
6GR–24322–00	17 – 33
6GR–24323–00	17 – 36
6GR–24324–00	17 – 39
6GR–24325–00	17 – 43
6E5–24351–51	17 – 4
6AW–24360–01	20 – 1
6GR–24376–00	8 – 5
6AW–24377–01	17 – 2
688–24378–00	15 – 24
6E5–24378–00	17 – 17
6GR–24378–00	29 – 18
6E5–24379–00	42 – 9
6GR–243A1–00	19 – 1
6GR–243A2–00	19 – 2
6GR–243A3–00	19 – 3
6GR–243A4–00	19 – 4
6GR–24408–00	18 – 10
6R5–24408–10	17 – 34
6GR–24410–00	17 – 22
6GR–2441R–00	16 – 6
6GR–24420–10	16 – 20
6GR–24425–00	17 – 20
6GR–24426–00	17 – 27
6GR–24430–00	16 – 12
6GR–24452–00	29 – 29
6GR–24460–00	18 – 12
6GR–24460–20	17 – 40
6CB–24461–00	18 – 9
	19 – 9
6GR–24462–00	17 – 24
6GR–24474–00	18 – 13
6GR–24491–00	17 – 26
6DA–24492–00	17 – 23

PART NO.	REF. NO.
6GR–244A1–00	16 – 7
6GR–24501–00	19 – 6
6GR–24560–00	17 – 5
6GR–24561–00	17 – 6
6P3–24563–01	1 – 10
	17 – 8
6P3–24564–00	1 – 11
	17 – 7
6GR–24566–00	17 – 11
6GR–24568–00	17 – 9
6GR–24595–00	19 – 14
6GR–24596–00	17 – 47
6GR–24599–00	19 – 22
6GR–2464E–00	18 – 18
6GR–24864–00	36 – 9
6GR–28100–10	33 – 7
6CB–2812A–00	25 – 9
6GR–28199–70–D0	33 – 8
6GR–28199–70–E0	33 – 8
6GR–28199–70–F0	33 – 8
6GR–28199–70–G0	33 – 8
6GR–28199–70–H0	33 – 8
6GR–28199–70–S0	33 – 8
6GR–28199–80–K0	33 – 9
6GR–28199–80–L0	33 – 9
6GR–28199–80–M0	33 – 9
6GR–28199–80–N0	33 – 9
6GR–28199–80–P0	33 – 9
6GR–28199–80–R0	33 – 9
6GR–41114–00	15 – 15
6GR–41124–00	15 – 7
6GR–41134–00	15 – 19
6GR–41137–00	40 – 1
6GR–41297–00	40 – 5
6GR–42134–00	36 – 29
6GR–42195–00	34 – 12
6BG–42384–00	40 – 9
6DA–42384–00	40 – 15
6GR–42384–00	40 – 12
6GR–42401–00	36 – 25
6GR–42477–00	2 – 3
	3 – 2
6GR–42510–00–8D	37 – 1
6GR–42541–00	8 – 2
6GR–42610–00–8D	2 – 1
6GR–42610–00–CE	2 – 1
6GR–42610–10	3 – 1
6GR–42615–00	30 – 10

PART NO.	REF. NO.
6GR–4261A–00–8D	2 – 2
6GR–4261A–00–CE	2 – 2
6GR–42622–00	30 – 4
6GR–42623–00	30 – 8
6GR–42625–00	30 – 19
6GR–42625–00–8D	30 – 19
6GR–42625–00–CE	30 – 19
6GR–42629–00	2 – 20
	3 – 18
6GR–42643–00	2 – 8
	3 – 7
6GR–42647–00	2 – 5
	3 – 4
6GR–42648–00	2 – 6
	3 – 5
6GR–42649–00	2 – 7
	3 – 6
663–42662–00	2 – 17
	3 – 16
6AW–42663–00	2 – 9
	3 – 8
6GR–42675–00	2 – 21
6GR–42676–00	2 – 22
6GR–42677–00	2 – 25
6GR–42678–00	33 – 5
6GR–4267A–10	33 – 4
6GR–42682–00	33 – 6
6DA–42697–00	36 – 5
6AW–42697–10	33 – 1
6GR–42711–00–8D	29 – 1
6GR–42711–00–CE	29 – 1
6GR–42712–00	30 – 1
6GR–42712–00–8D	30 – 1
6GR–42712–00–CE	30 – 1
6GR–42713–00	30 – 5
6GR–42713–00–8D	30 – 5
6GR–42713–00–CE	30 – 5
6GR–42716–00	40 – 30
	52 – 6
61A–42717–00	35 – 13
6DA–42717–00	40 – 14
6GR–42717–00	29 – 8
6GR–42718–00	29 – 9
6AW–42724–00	40 – 7
6GR–42724–00	40 – 11
6GR–42725–00	29 – 5
6H1–42726–21	40 – 8
6GR–42740–00	32 – 1

PART NO.	REF. NO.
6GR–42740–00–8D	32 – 1
6GR–42740–00–CE	32 – 1
6GR–42742–00	43 – 26
6GR–42743–00	7 – 20
6GR–42744–00	30 – 2
	30 – 6
60V–42747–10	40 – 17
6GR–42748–00	30 – 20
6H4–42748–00	29 – 10
6GR–42753–00	29 – 26
6GR–42758–00	30 – 13
	30 – 22
6GR–42761–00	29 – 6
6GR–42768–00	30 – 18
6GR–42769–00	30 – 11
6GR–42770–00	32 – 5
6GR–42770–00–8D	32 – 5
6GR–42770–00–CE	32 – 5
6GR–42774–00–CA	32 – 3
69J–42774–10	30 – 17
	32 – 9
6GR–42775–00–CA	32 – 7
6GR–42776–00	43 – 29
6GR–42783–00	33 – 2
6GR–42784–00	33 – 3
6AW–42785–00	42 – 4
6EE–42794–40	29 – 31
6EE–42794–50	29 – 32
6GR–42815–00	31 – 1
6GR–42815–00–8D	31 – 1
6GR–42815–00–CE	31 – 1
6GR–42816–00	31 – 2
6GR–42816–00–8D	31 – 2
6GR–42816–00–CE	31 – 2
6GR–42817–00	31 – 3
6GR–42817–00–8D	31 – 3
6GR–42817–00–CE	31 – 3
6GR–42818–00	31 – 14
6GR–42819–00	31 – 15
6GR–42828–00	31 – 4
6GR–42829–00	31 – 5
6GR–42833–00	31 – 10
68T–42835–00	31 – 9
6GR–42835–00	31 – 7
6GR–4311A–00–8D	35 – 1
6GR–4311A–00–CE	35 – 1
6GR–4311B–00–8D	35 – 7
6GR–4311B–00–CE	35 – 7

PART NO.	REF. NO.
6GR–43121–00	36 – 36
6GR–43126–00	36 – 23
6GR–43144–00	35 – 19
6G5–43148–00	35 – 24
6GR–43181–00	35 – 21
6GR–43185–00	35 – 22
6GR–43311–00–8D	35 – 17
6GR–43311–00–CE	35 – 17
6GR–43318–00	36 – 7
6GR–43318–00–8D	36 – 7
6GR–43318–00–CE	36 – 7
6GR–43333–00	35 – 14
6GR–43341–00	36 – 1
6GR–43342–00	36 – 2
6GR–43376–00	35 – 30
6GR–43378–00	36 – 43
6GR–43654–00	38 – 17
6GR–43679–00	36 – 4
6GR–43800–09	38 – 1
6GR–43801–00	38 – 4
6GR–43804–00	39 – 3
6GR–43805–00	39 – 2
6GR–4380F–00	39 – 6
6C5–4380G–00	39 – 45
6GR–4380K–00	38 – 21
6GR–4380L–00	38 – 42
6GR–43810–00	38 – 3
6GR–43811–00	38 – 9
6GR–43812–00	38 – 5
6GR–43814–00	38 – 20
6C5–43816–00	39 – 44
69J–43817–00	38 – 44
6C6–43817–00	39 – 42
6GR–43818–00	38 – 27
6GR–4381E–00	35 – 9
6GR–4381F–00	35 – 10
6GR–4381J–00	36 – 19
6GR–43820–00	38 – 37
61A–43821–01	38 – 35
69J–43822–00	38 – 34
6GR–43827–00	38 – 18
6GR–43828–00	38 – 47
6EK–43829–00	38 – 50
6GR–4382A–00	36 – 21
6GR–4382E–00	38 – 11
6D8–4382L–00	39 – 34
6GR–43830–00	39 – 13
69J–43831–00	39 – 41

PART NO.	REF. NO.
6GR–43835–00	38 – 22
6GR–4383E–00	27 – 4
6GR–4383K–00	42 – 3
6GR–43840–00	38 – 2
6CJ–43841–00	39 – 15
6D8–43843–00	39 – 29
6D8–43844–00	39 – 28
6H1–43844–10	39 – 32
6GR–43845–00	38 – 30
69A–4384F–00	39 – 18
6H1–4384G–11	39 – 31
69J–4384H–00	38 – 10
61A–4384H–10	38 – 40
6CJ–4384M–00	39 – 17
6GR–43851–00	39 – 24
6C6–43853–00	39 – 21
6C5–43854–00	39 – 36
6C5–43855–10	39 – 26
6GR–43856–00	39 – 33
61A–43861–00	38 – 32
6GR–43862–00	38 – 24
6GR–43863–00	38 – 8
61A–43864–00	38 – 39
6GR–43864–00	39 – 12
6GR–4386K–00	39 – 7
6GR–43871–00	38 – 14
6GR–43872–00	38 – 7
6GR–43873–00	44 – 5
	47 – 5
61A–43874–00	38 – 38
6T4–43875–01	38 – 33
61A–43875–10	38 – 41
61A–43876–00	38 – 31
67C–43879–10	39 – 9
6C6–4387G–00	39 – 20
6GR–43880–00	39 – 1
6GR–43881–00	39 – 10
6GR–43882–00	39 – 11
6H1–43883–00	39 – 16
69J–43888–00	38 – 48
69J–4388F–00	38 – 45
6GR–4388F–00	38 – 25
6GR–4388H–00	38 – 43
6GR–43892–00	39 – 4
6GR–43895–00	39 – 35
69J–4389J–00	39 – 23
	39 – 43
6GR–438A0–00	36 – 31

PART NO.	REF. NO.
6GR–44117–00	34 – 6
6GR–44120–00	34 – 20
6GR–44121–00	34 – 17
6CE–44122–00	34 – 11
6GR–44150–00	44 – 15
6GS–44150–00	47 – 15
6GR–44150–10	44 – 15
6GS–44150–10	47 – 15
6GR–44150–20	44 – 15
6GS–44150–20	47 – 15
6GR–44194–00	37 – 22
6GR–44311–00	44 – 25
	47 – 25
6GR–44312–00	44 – 27
	47 – 27
6GR–44315–00	44 – 36
	47 – 36
	52 – 24
6GR–44322–00	44 – 28
	47 – 28
	52 – 34
6GR–44323–00	44 – 24
	47 – 24
	52 – 33
6GR–44328–00	44 – 35
	47 – 35
6GR–44331–00	36 – 26
6GR–44332–00	36 – 27
6AW–44336–00	44 – 34
	47 – 34
	52 – 38
6GR–44341–00	44 – 17
	47 – 17
6GR–44352–00	44 – 33
	47 – 33
	52 – 37
6GR–44365–00	44 – 31
	47 – 31
	52 – 23
6GR–44366–00	40 – 20
	43 – 35
	52 – 8
	52 – 14
6GR–44367–00	41 – 12
	52 – 13
6GR–44379–00	44 – 32
	47 – 32
6GR–44381–00	44 – 21

PART NO.	REF. NO.
6GR–44381–00	47 – 21
6GR–44382–00	44 – 22
	47 – 22
6GR–44391–00	40 – 16
6GR–44511–00–CA	37 – 25
6GR–44514–00	37 – 19
6GR–44515–00	37 – 20
6GR–44521–00	41 – 11
	52 – 12
6G5–44526–00	35 – 3
6GR–44533–00	37 – 24
6GR–44551–00–CA	37 – 6
6AW–44552–00–CA	37 – 17
6GR–44554–00	29 – 24
6AW–44555–00	37 – 9
6GR–44575–00	37 – 8
6GR–45111–00–8D	41 – 6
6GR–45111–00–CE	41 – 6
6GR–45113–00	41 – 7
	52 – 11
6GR–45127–00	41 – 5
	52 – 9
6GR–45135–00	40 – 28
6GR–45141–00	32 – 13
6GR–45141–00–8D	32 – 13
6GR–45141–00–CE	32 – 13
6GR–45152–00	43 – 37
6GR–45158–00–8D	46 – 26
	49 – 26
6GR–45158–00–CE	46 – 26
	49 – 26
6GR–45159–00	42 – 14
6GR–45211–00–8D	41 – 14
	41 – 14
6GR–45211–00–CE	41 – 14
	41 – 14
6GR–45214–00	46 – 10
	49 – 10
6GR–45215–00	46 – 12
	49 – 12
6GR–45224–00	46 – 14
	49 – 14
6GR–45225–00	46 – 16
	49 – 16
6GR–45244–00	44 – 51
	47 – 51
6AW–45251–00	1 – 12
	35 – 2

PART NO.	REF. NO.
6GR–45300–00–8D	44 – 1
6GS–45300–00–8D	47 – 1
6GR–45300–00–CE	44 – 1
6GS–45300–00–CE	47 – 1
6GR–45300–10–8D	44 – 1
6GS–45300–10–8D	47 – 1
6GR–45300–10–CE	44 – 1
6GS–45300–10–CE	47 – 1
6GR–45300–20–8D	44 – 1
6GS–45300–20–8D	47 – 1
6GR–45300–20–CE	44 – 1
6GS–45300–20–CE	47 – 1
6GR–45308–00	44 – 3
	47 – 3
6GR–45309–00	44 – 10
	47 – 10
6GR–45311–00–8D	44 – 2
	47 – 2
6GR–45311–00–CE	44 – 2
	47 – 2
6GR–45318–00	41 – 10
6GR–45321–00	44 – 9
	47 – 9
6GR–45332–00	45 – 33
6GS–45332–00	48 – 33
6GR–45335–00	44 – 41
	47 – 41
6GR–45341–00	46 – 7
	49 – 7
6GR–45344–00	44 – 40
	47 – 40
6GR–45368–00	42 – 1
6GR–45369–00	42 – 6
6AW–45373–00	1 – 15
	46 – 18
	49 – 18
6GR–45375–00	41 – 19
	41 – 19
	44 – 8
	47 – 8
6GR–45376–00	44 – 7
	47 – 7
6GR–45383–00	45 – 38
	48 – 38
6GR–45384–00	45 – 39
	48 – 39
6GR–45393–00	27 – 2
	27 – 6

PART NO.	REF. NO.
6GR–45394–00	27 – 1
6GR–45395–00	27 – 5
6GR–45398–00	41 – 15
	41 – 15
6GR–45399–00	41 – 17
	41 – 17
6GR–45501–00	44 – 49
	47 – 49
6GR–45501–10	44 – 49
	47 – 49
6GR–45501–20	44 – 49
	47 – 49
6GR–45539–00	44 – 50
	47 – 50
6GR–45551–00	45 – 8
	48 – 8
6GR–45561–00	45 – 10
6GS–45561–00	48 – 10
6GR–45567–00	45 – 5
	48 – 5
688–45567–01	44 – 45
	47 – 45
688–45567–10	44 – 45
	47 – 45
6GR–45567–10	45 – 5
	48 – 5
688–45567–20	44 – 45
	47 – 45
6GR–45567–20	45 – 5
	48 – 5
688–45567–30	44 – 45
	47 – 45
6GR–45567–30	45 – 5
	48 – 5
688–45567–40	44 – 45
	47 – 45
6GR–45567–40	45 – 5
	48 – 5
688–45567–50	44 – 45
	47 – 45
6GR–45567–50	45 – 5
	48 – 5
688–45567–60	44 – 45
	47 – 45
6GR–45567–60	45 – 5
	48 – 5
6GR–45567–70	45 – 5
	48 – 5

PART NO.	REF. NO.
6GR–45571–00	45 – 25
6GS–45571–00	48 – 26
6GR–45576–00	45 – 27
	48 – 28
6GR–45577–00	45 – 28
	48 – 29
6GR–45577–10	45 – 28
	48 – 29
6GR–45577–20	45 – 28
	48 – 29
6GR–45577–30	45 – 28
	48 – 29
6GR–45577–40	45 – 28
	48 – 29
6GR–45577–50	45 – 28
	48 – 29
6GR–45577–60	45 – 28
	48 – 29
6GR–45578–00	45 – 31
6K1–45578–01	48 – 31
6GR–45578–10	45 – 31
6K1–45578–10	48 – 31
6GR–45578–20	45 – 31
6K1–45578–20	48 – 31
6GR–45578–30	45 – 31
6K1–45578–30	48 – 31
6GR–45578–40	45 – 31
6K1–45578–40	48 – 31
6GR–45578–50	45 – 31
6K1–45578–50	48 – 31
6GR–45578–60	45 – 31
6K1–45578–60	48 – 31
6GR–45578–70	45 – 31
6GR–45611–00	45 – 14
6GS–45611–00	48 – 15
6GR–45631–00	45 – 17
	48 – 18
6GR–45632–00	45 – 16
	48 – 17
6GR–45633–00	45 – 18
	48 – 19
6GR–45634–00	45 – 15
	48 – 16
61A–45635–00	45 – 20
	48 – 21
6H1–45668–00	45 – 19
	48 – 20
6GR–45824–00	45 – 6

PART NO.	REF. NO.
6GR–45824–00	48 – 6
6GR–45930–10	46 – 27
6GS–45930–10	49 – 27
6GR–45934–10	46 – 27
6GS–45934–10	49 – 27
6GR–45936–10	46 – 27
6GS–45936–10	49 – 27
6GR–45938–10	46 – 27
6GS–45938–10	49 – 27
6GR–45970–10	46 – 27
6GS–45970–10	49 – 27
6GR–45972–10	46 – 27
6GS–45972–10	49 – 27
6GR–45974–10	46 – 27
6GS–45974–10	49 – 27
6GR–45976–10	46 – 27
6GS–45976–10	49 – 27
6GR–45978–10	46 – 27
6GS–45978–10	49 – 27
6GR–45987–00	46 – 21
	49 – 21
6GR–45997–00	46 – 22
	49 – 22
6GR–45C81–10	46 – 28
	49 – 28
6GR–47445–00	36 – 37
6GR–47716–00	36 – 34
6GR–4820A–00	34 – 1
6Y8–48277–00	50 – 16
6GR–48538–00	36 – 32
6GR–48539–00	36 – 40
F2S–6411H–00	2 – 19
6GR–68303–00	34 – 25
6GR–762W0–00	24 – 13
68V–81147–00	12 – 7
6GR–8132G–00	22 – 16
6GR–81410–00	21 – 4
6GR–81443–00	27 – 9
6GR–81639–00	21 – 22
6GR–81662–00	27 – 3
6GR–81673–00	5 – 5
6AW–81800–00	28 – 1
6AW–81807–00	28 – 3
6AW–81808–00	28 – 8
6AW–81810–00	28 – 16
6AW–81820–00	28 – 18
6AW–81826–00	28 – 19
6AW–81830–00	28 – 2

PART NO.	REF. NO.
6AW–81832–00	28 – 7
6AW–81836–00	28 – 4
6AW–81839–00	28 – 14
6AW–8183R–00	28 – 11
6AW–8183T–00	28 – 6
6AW–81840–00	28 – 17
6AW–81842–00	28 – 15
6GR–81845–00	27 – 12
6AW–81846–00	28 – 20
6AW–81850–00	28 – 13
6AW–81854–00	28 – 12
6AW–81857–00	28 – 9
6AW–81862–00	28 – 10
6AW–81891–00	28 – 5
6GR–818D2–00	22 – 17
6GR–81916–00	24 – 4
6GR–81919–00	25 – 12
6GR–81919–10	25 – 13
6GR–81919–20	25 – 14
6P2–81923–00	24 – 15
6GR–81925–00	24 – 3
6GR–81929–00–9S	24 – 7
6AW–81941–00	28 – 21
6GR–81942–00	21 – 17
6GR–81948–00	22 – 7
6GR–81949–00	24 – 14
68V–81950–00	22 – 25
6GR–81960–00	22 – 13
6GR–81975–00	22 – 14
6EE–81994–40	21 – 28
6EE–81994–50	21 – 29
6AH–81996–00	29 – 33
6GR–82105–00	24 – 17
6P2–82113–00	25 – 10
6GR–82117–00	24 – 10
6T4–82117–00	37 – 27
6AW–82119–00	24 – 18
6GR–82119–00	25 – 17
	26 – 3
	26 – 12
6AW–82119–10	24 – 12
6GR–82119–10	24 – 11
	26 – 13
6AW–82119–20	24 – 19
6GR–82131–00	27 – 14
6GR–82147–00	35 – 11
6GR–82149–00	37 – 13
6CB–82151–00	25 – 4

PART NO.	REF. NO.
6GR–82151–00	25 – 3
6CB–82151–10	25 – 5
6GR–82151–10	25 – 2
6CB–82151–20	25 – 6
6CB–82151–30	25 – 7
6GR–82171–00	25 – 24
6GR–82181–00	39 – 5
6GR–82310–00	23 – 1
6GR–82316–00	7 – 17
6A0–82317–00	21 – 20
	21 – 25
	23 – 24
	23 – 30
6GR–82386–00	23 – 9
6GR–82386–10	23 – 11
6DA–82388–00	22 – 21
6GR–82388–00	23 – 12
6GR–82389–00	23 – 15
6GR–82398–00	40 – 31
6GR–82421–00	18 – 17
6Y8–82509–10	50 – 8
6Y8–82521–11	50 – 15
6GR–82553–00	36 – 16
6GR–82563–00	29 – 28
6GR–8257G–00	11 – 18
6GR–82588–00	15 – 28
6GR–82589–00	25 – 18
6GR–82590–00	26 – 1
6GR–82599–00	27 – 7
6GR–8259M–00	26 – 11
6GR–825A8–00	18 – 16
6GR–8272F–00	23 – 3
6GR–8272G–00	23 – 6
6GR–8272U–00	25 – 26
68F–82846–00	25 – 11
6X4–83383–00	50 – 5
6X4–83386–00	50 – 6
6GR–83558–00	29 – 21
4P9–83591–00	22 – 27
6GR–83614–00	22 – 30
6AW–83651–00	13 – 12
6GR–8366B–00	14 – 14
68F–83688–10	12 – 6
6GR–8398X–00	21 – 3
6Y8–8454G–00	50 – 11
68F–85119–00	22 – 10
	25 – 21
68F–85516–01	25 – 19

PART NO.	REF. NO.
6GR–85525–00	25 – 29
6GR–85544–00	25 – 8
689–85547–00	17 – 1
68V–85548–01	22 – 24
6GR–85561–00	21 – 5
60V–85564–00	22 – 8
6CE–85564–00	34 – 4
6GR–85586–00	21 – 8
6CJ–85780–00	4 – 46
6GR–85790–00	22 – 28
6GR–85887–00	36 – 13
6GR–85895–00	22 – 1
6GR–85896–00	23 – 20
6GR–8591A–00	22 – 3
6GR–8591B–00	22 – 5
6GR–86120–00	7 – 14
6Y8–86260–03	50 – 2
6Y8–86260–12	50 – 2
6AA–86261–01	50 – 3
6AA–86261–22	50 – 3
6Y8–86267–00	50 – 1
6GR–8A411–00	18 – 15
K0F–A3741–00	9 – 5
K0F–A3742–00	9 – 6
K0F–A3743–00	9 – 3
6GR–W0001–00	51 – 1
6GR–W0001–20	52 – 1
6GR–W0005–00	19 – 27
6GR–W0078–00	1 – 17
	52 – 31
6GR–W009A–00–9S	6 – 1
6GR–W009C–00–9S	6 – 11
6GR–W1165–00	5 – 17
6GR–W436G–00–8D	36 – 4
6GR–W436G–00–CE	36 – 4
6GR–W4624–00	10 – 15
6GR–W8145–00	21 – 1
6GR–W85AA–00	25 – 1
6EK–W9010–00	21 – 2
90101–12031	35 – 32
90101–12036	35 – 32
90101–12053	35 – 32
90101–12054	35 – 32
	35 – 32
90101–12055	35 – 32
90101–12056	35 – 32
90101–12057	35 – 32
90105–06028	23 – 2

PART NO.	REF. NO.
90105–06035	7 – 16
90105–06037	4 – 21
	4 – 23
	4 – 28
	4 – 30
	4 – 42
	10 – 14
90105–06151	13 – 7
90105–08175	4 – 8
	4 – 15
	6 – 29
	14 – 10
	19 – 24
	22 – 15
90105–08220	4 – 9
	6 – 28
	15 – 17
	15 – 20
90105–08266	14 – 12
90105–08268	15 – 5
90105–08M36	12 – 5
90105–10257	46 – 20
	49 – 20
90105–10446	5 – 9
90105–14012	37 – 14
90105–16004	37 – 21
90109–06286	4 – 36
90110–06038	7 – 18
90110–06191	36 – 35
90110–06425	46 – 13
	46 – 17
	49 – 13
	49 – 17
90110–08M05	39 – 47
90110–10048	46 – 5
	49 – 5
90110–10049	46 – 5
	49 – 5
90110–10050	46 – 5
	49 – 5
90111–06142	32 – 11
90111–06144	29 – 25
	32 – 10
	32 – 15
	36 – 6
	36 – 8
90111–06175	30 – 14
	30 – 23

PART NO.	REF. NO.
90111–06176	30 – 15
90111–08078	2 – 10
	3 – 9
90116–08037	14 – 8
	19 – 25
90116–10066	46 – 1
	49 – 1
90116–10067	46 – 1
	49 – 1
90119–06269	16 – 24
90119–06M17	17 – 31
90119–06MA6	11 – 11
90119–07234	6 – 9
	6 – 19
90119–07235	6 – 8
	6 – 18
90119–08022	11 – 5
	11 – 10
90119–08175	34 – 2
90119–08176	36 – 3
90119–08M16	44 – 39
	47 – 39
	52 – 40
90119–08M22	29 – 4
90119–10009	41 – 21
	46 – 4
	49 – 4
90119–10024	37 – 18
	41 – 21
	46 – 1
	49 – 1
90119–10040	35 – 16
	40 – 23
	43 – 6
90119–10050	10 – 7
90119–10058	37 – 26
90119–10060	46 – 4
	49 – 4
90119–10064	35 – 15
90119–10M08	40 – 24
90119–10M14	43 – 4
90149–05044	36 – 22
90149–11001	6 – 27
90151–06069	4 – 32
90167–05017	30 – 9
90167–06M00	50 – 12
90169–05M00	29 – 12
90170–18009	45 – 9

PART NO.	REF. NO.
90170–18009	48 – 9
90170–35M34	44 – 48
	47 – 48
90171–18M04	46 – 24
	49 – 24
90173–06001	32 – 12
90179–06M28	43 – 30
90179–08003	24 – 2
90179–08M34	14 – 9
	19 – 26
90179–14007	36 – 42
90183–02M03	45 – 22
	48 – 23
90185–06M07	34 – 15
	46 – 11
	46 – 15
	49 – 11
	49 – 15
90201–02M00	45 – 21
	48 – 22
90201–06068	34 – 13
90201–06M30	50 – 13
90201–10048	34 – 10
90201–10M63	34 – 23
90201–12060	35 – 33
90201–12064	34 – 5
90201–12426	35 – 34
90201–13M19	35 – 35
90201–156J2	31 – 13
90201–15M58	37 – 12
90201–16M55	37 – 11
90201–18029	38 – 15
90201–18030	37 – 23
90201–186F1	15 – 3
90201–19M01	46 – 23
	49 – 23
90201–253K0	48 – 13
90201–40008	45 – 30
90201–51014	37 – 2
90201–54008	45 – 13
90202–08M41	34 – 14
90202–32M19	37 – 10
90202–51001	37 – 5
90206–15M18	31 – 12
90214–35M07	44 – 47
	47 – 47
90240–05002	31 – 8
90249–06M19	35 – 25

PART NO.	REF. NO.
90269–05010	21 – 16
90282–05008	45 – 37
	48 – 37
90338–07012	30 – 24
90340–08003	46 – 6
	49 – 6
90340–18M09	15 – 2
90340–24001	4 – 3
90340–27001	4 – 12
90340–32011	40 – 2
90340–97002	6 – 5
	6 – 15
90344–51019	6 – 4
	6 – 14
90386–10M16	35 – 23
90386–12M61	34 – 22
90386–15M73	31 – 11
90386–20002	35 – 29
90386–49001	37 – 4
90387–06119	21 – 19
	21 – 24
	23 – 23
	23 – 29
90387–06176	22 – 9
	25 – 20
90387–06289	17 – 30
90387–08104	34 – 3
90387–08M37	29 – 3
90387–08M45	2 – 13
	3 – 12
90387–10094	2 – 11
	3 – 10
90387–11005	6 – 26
90401–12002	10 – 9
90401–19001	13 – 4
90430–10004	22 – 29
90430–24239	4 – 4
90440–27001	41 – 13
90440–27002	41 – 13
90440–27003	41 – 13
90445–09047	15 – 25
90445–09048	8 – 4
90445–09104	15 – 22
90445–09304	8 – 14
90445–09M00	8 – 7
90445–16025	29 – 19
90445–23003	29 – 23
90450–35003	40 – 29

PART NO.	REF. NO.
90460–15227	29 – 30
90462–10033	36 – 11
90464–09013	26 – 5
90464–09129	23 – 27
90464–09M47	23 – 10
	26 – 2
90464–11121	17 – 12
90464–12009	17 – 44
	17 – 46
90464–12010	17 – 45
	26 – 6
90464–12012	26 – 4
90464–12015	15 – 31
	23 – 19
	40 – 34
90464–12183	11 – 16
	11 – 22
	21 – 12
	22 – 12
	22 – 20
	36 – 39
90464–13249	11 – 17
	11 – 21
	15 – 30
	17 – 13
	22 – 23
	22 – 32
	23 – 17
	25 – 23
90464–16015	19 – 28
90464–18004	26 – 8
90464–18246	17 – 14
90464–19M45	40 – 33
90464–20181	4 – 45
	11 – 14
	11 – 15
	11 – 20
	22 – 19
	23 – 5
	23 – 8
	23 – 14
	23 – 18
90464–29001	15 – 27
90464–29223	19 – 11
90464–30001	25 – 22
90464–32002	22 – 11
90464–44002	26 – 14
90464–55002	36 – 18

PART NO.	REF. NO.
90464–66001	43 – 38
90464–99004	11 – 4
90464–99006	29 – 27
90465–08M63	35 – 5
90465–11M10	8 – 10
	15 – 26
	17 – 10
	17 – 18
	17 – 25
	19 – 15
	29 – 22
	36 – 10
	36 – 17
	38 – 51
	40 – 10
	42 – 2
	42 – 5
	42 – 7
	42 – 10
	50 – 10
90465–11M59	8 – 11
	26 – 9
	40 – 13
90465–13M24	8 – 15
	26 – 7
90465–13M60	17 – 41
90465–13M97	18 – 14
	18 – 19
	19 – 23
	27 – 11
90467–120A7	17 – 38
90467–140A9	17 – 32
	17 – 35
	17 – 42
90467–141A1	18 – 6
	19 – 10
90467–150A5	8 – 3
90468–18008	34 – 16
	34 – 19
90468–180A0	34 – 18
90480–10M23	17 – 29
90480–12314	21 – 21
	21 – 26
	23 – 26
	23 – 32
	25 – 28
90480–13034	30 – 16
90480–14M17	32 – 2

PART NO.	REF. NO.
90480–14M17	32 – 6
	32 – 14
90480–16015	30 – 12
	30 – 21
90480–20M05	29 – 17
	29 – 20
	43 – 24
90480–22M81	29 – 2
90501–10M77	45 – 23
	48 – 24
90501–200A2	43 – 23
90506–16010	35 – 26
91317–06014	5 – 6
91318–03005	39 – 40
91318–03025	39 – 39
91318–05030	39 – 38
91318–05045	39 – 46
91380–04010	36 – 30
91380–05016	44 – 20
	47 – 20
91380–10020	35 – 8
91490–20015	34 – 8
91490–20025	36 – 44
91490–40030	46 – 25
	49 – 25
91690–30020	35 – 27
91690–40018	6 – 10
	6 – 20
91690–50014	11 – 6
91690–60022	35 – 28
91809–08006	6 – 7
	6 – 17
92990–06100	2 – 16
	3 – 15
92990–08600	2 – 12
	3 – 11
92990–10300	46 – 19
	49 – 19
92995–06200	43 – 27
92995–10600	46 – 2
	49 – 2
92995–14600	37 – 16
93101–30018	44 – 43
	47 – 43
	52 – 29
93101–37001	45 – 36
	48 – 36
	52 – 30

PART NO.	REF. NO.
93102–26004	40 – 4
	52 – 7
93102–38008	10 – 10
	51 – 17
93102–85010	5 – 7
	51 – 16
93102–90004	5 – 3
	51 – 15
93106–14001	44 – 13
	47 – 13
	52 – 27
93109–26001	44 – 26
	47 – 26
	52 – 28
93210–04279	50 – 9
93210–04N51	39 – 30
93210–064A5	39 – 25
93210–06ME6	36 – 24
93210–07100	41 – 18
	41 – 18
	44 – 11
	47 – 11
	52 – 18
93210–09165	1 – 14
	38 – 49
	46 – 9
	49 – 9
	52 – 17
93210–10010	41 – 16
	41 – 16
	44 – 4
	47 – 4
	52 – 15
93210–11073	34 – 24
93210–12327	38 – 29
93210–13M63	4 – 40
	14 – 5
	15 – 9
	51 – 12
93210–17MF9	36 – 14
93210–18322	6 – 6
	6 – 16
93210–18397	38 – 16
93210–19123	1 – 13
	46 – 8
	49 – 8
	52 – 16
93210–19216	6 – 22

PART NO.	REF. NO.
93210–19216	51 – 2
93210–19MJ3	43 – 18
	52 – 5
93210–24M79	13 – 9
	51 – 21
93210–26003	15 – 18
93210–260A5	5 – 10
93210–26130	38 – 26
93210–26658	4 – 10
	51 – 8
93210–27370	24 – 8
93210–28646	7 – 8
	51 – 5
93210–32172	40 – 3
93210–34633	1 – 5
	43 – 13
	52 – 4
93210–37160	44 – 30
	47 – 30
	52 – 22
	52 – 36
93210–44006	38 – 13
	38 – 19
93210–49003	37 – 3
93210–49046	38 – 6
93210–64488	44 – 12
	47 – 12
	52 – 19
93210–66001	38 – 46
93210–89535	44 – 42
	47 – 42
	52 – 25
93210–90001	15 – 12
93210–97690	44 – 23
	47 – 23
	52 – 20
	52 – 32
93211–08001	44 – 29
	47 – 29
	52 – 21
	52 – 35
93211–10001	15 – 13
93211–26001	45 – 34
	48 – 34
	52 – 26
93306–01501	45 – 26
93311–675A1	45 – 2
	48 – 2

PART NO.	REF. NO.
93311–737A2	45 – 35
	48 – 35
93311–944A0	45 – 1
	48 – 1
93332–00042	45 – 29
93332–000A0	45 – 11
93332–000B2	48 – 27
93340–69012	45 – 4
	48 – 4
93341–440U5	48 – 30
93390–00033	48 – 11
93399–99967	44 – 46
	47 – 46
93410–46099	37 – 7
93420–36M01	43 – 14
93440–25020	48 – 14
93440–52N50	38 – 36
93450–42110	38 – 23
93450–92171	45 – 3
	48 – 3
93501–04011	45 – 24
	48 – 25
93501–08001	39 – 27
93505–32038	38 – 12
	39 – 22
93603–08072	39 – 14
93604–26256	39 – 37
93606–12019	4 – 5
	4 – 6
	4 – 14
	5 – 2
	14 – 13
	15 – 6
	15 – 21
	41 – 4
	41 – 9
	43 – 7
	43 – 11
	44 – 37
	47 – 37
	52 – 39
93606–16117	45 – 7
	48 – 7
93608–12M05	44 – 38
	47 – 38
93608–16M16	14 – 11
	40 – 25
93700–06002	35 – 18

PART NO.	REF. NO.
94581–99044	10 – 11
94702–00442	1 – 16
	6 – 30
95022–06035	21 – 6
95380–06600	2 – 15
	3 – 14
95380–10600	46 – 3
	49 – 3
95380–10700	34 – 9
95380–12600	35 – 36
95380–14800	37 – 15
95780–06300	50 – 14
95780–06500	25 – 16
95780–08300	2 – 14
	3 – 13
95780–10300	35 – 31
95817–06075	13 – 2
95895–06012	11 – 19
	17 – 28
	21 – 14
	27 – 13
	30 – 3
	30 – 7
	31 – 6
	35 – 6
	35 – 20
	36 – 12
	36 – 20
	36 – 38
	36 – 41
	40 – 32
95895–06014	19 – 19
95895–06016	15 – 29
	17 – 15
	17 – 21
	17 – 48
	21 – 11
	22 – 6
	22 – 18
	22 – 22
	22 – 31
	23 – 4
	23 – 7
	23 – 13
	23 – 16
	25 – 15
	25 – 27
	25 – 30

PART NO.	REF. NO.
95895–06016	27 – 10
	40 – 18
	43 – 19
95895–06020	7 – 21
	11 – 2
	22 – 4
	29 – 7
	32 – 4
	32 – 8
	40 – 21
	40 – 27
	43 – 34
95895–06025	7 – 9
	21 – 18
	21 – 23
	23 – 25
	23 – 31
	24 – 9
	43 – 25
95895–06030	7 – 5
	7 – 13
	21 – 7
	41 – 2
95895–08012	31 – 16
95895–08016	24 – 6
	24 – 16
	24 – 20
95895–08020	24 – 5
	25 – 25
97095–05010	44 – 19
	47 – 19
97095–06012	40 – 6
	42 – 13
	43 – 36
97095–06018	36 – 33
97513–08545	24 – 1
97575–08535	34 – 7
97575–10570	40 – 22
	41 – 3
	41 – 8
	43 – 5
	43 – 9
97575–10580	43 – 10
97580–08535	36 – 28
97595–05516	36 – 15
97595–06510	35 – 12
	37 – 28
97595–06516	18 – 20

PART NO.	REF. NO.
97595–06516	21 – 9
	26 – 10
97595–06520	22 – 2
	23 – 21
97595–06530	35 – 4
97595–06540	34 – 21
97595–08520	44 – 44
	47 – 44
97595–08525	42 – 11
97595–08535	19 – 16
	44 – 14
	47 – 14
97602–04310	39 – 8
97607–04208	7 – 3
	7 – 11
97780–60620	22 – 26
	50 – 7
97880–06035	50 – 12
97980–06216	50 – 4
97985–05210	2 – 4
	3 – 3
98780–05025	6 – 24
98980–05025	4 – 39
	14 – 7
	15 – 11
99002–03600	39 – 19
99002–12600	44 – 16
	47 – 16
99009–55500	45 – 32
	48 – 32
99009–62500	45 – 12
	48 – 12
99480–08030	41 – 20
	41 – 20
	44 – 6
	47 – 6