YAMAHA

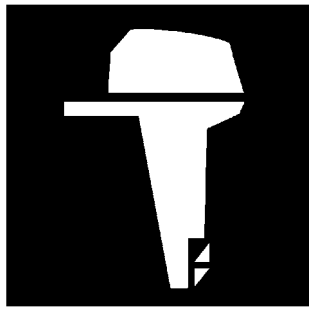

PARTS CATALOGUE
CATALOGUE DE PIECES DETACHEES

RIGGING-REMOCON

1G602-30RF1

( )

YAMAHA GENUINE Parts & Accessories

2009/10/1

NEWS NO.	DATE	COMMENT
PE0-OM-080065	Sep.,29,2008	MOD:FIG.12 6X3REMOTE CONTROL ASSY REVISION
PE0-OM-090043	Oct.,1,2009	MOD:FIG.35 EXTENSION, WIRE HARNESS ADDITION

RIGGING-REMOCON
PARTS CATALOGUE
©2008 by Yamaha Motor Co., Ltd.
1st edition, June 2008
All rights reserved.
Any reprinting or unauthorized use
without the written permission of
Yamaha Motor Co., Ltd.
is expressly prohibited.
Printed in Japan.

RIGGING-REMOCON
CATALOGUE DE PIECES DETACHEES
©2008 par Yamaha Motor Co., Ltd.
1re édition, juin 2008
Tous droits réservés
Toute réimpression ou utilisation
non autorisée sans la permission écrite
de la Yamaha Motor Co., Ltd.
est formellement interdite.
Imprimé au Japon

FOREWORD

This Parts Catalogue is related to the parts for the model(s) on the cover page. When you are ordering replacement parts, please refer to this Parts Catalogue and quote both part numbers and part names correctly.

1. Modifications or additions which have been made after the issue of the Parts Catalogue will be announced in the Parts News.
   It is advisable that you make the necessary corrections to the Parts Catalogue according to the Parts News.

2. Abbreviations
   The following abbreviations are used in this Parts Catalogue.

   “UR” Use specified parts number.
   “UN” Use as many as needed.
   “AP” Alternate Parts
   “LM” Locally Made (Parts need to be ordered locally)
   “F#” Frame No. (Applicable machine No.)
   “O/S” Over Size

3. The number of components for assembly
   - Parts, which are to be supplied in an assembly, are listed with a dot (.) in front of the part name as shown below.
   - The numeral appearing to the right of each component part indicates the quantity of parts for each assembly unit.

PART NO.	DESCRIPTION	Q’TY	REMARKS
2F5–83310–60	FRONT FLASHER LIGHT ASSY	2	
115–83311–60	.BULB (6V–18W)	1	

4. Applicable colours of graphics are represented in the “REMARKS” as shown below.

PART NO.	DESCRIPTION	Q’TY	REMARKS
2N4–24110–00–X5	FUEL TANK COMP.	2	MXR
3J1–24240–10	.GRAPHIC, FUEL TANK	1	FOR MXR

5. Note that the illustrations for reference in finding parts numbers are not to be used for assembling. When assembling, please use the applicable service manual.

6. The asterisk (*) before a reference number indicates modified items after the first edition.

AVANT–PROPOS

Ce catalogue de pièces détachées concerne les pièces pour le(s) modèle(s) indiqué(s) sur la page de couverture. Lorsque vous commandez des pièces de rechange, veuillez vous référer à ce catalogue de pieces détachées et indiquer clairement les numéros et les noms des pièces détachées.

1. Les modifications ou ajouts ayant été effectués après la parution du catalogue de pièces détachées seront décrits dans les Bulletins d'information concernant les pièces détachées.
   Il est recommandé que vous apportiez les corrections nécessaires au catalogue des pièces détachées en vous référant aux Bulletins d'information.

2. Abréviations
   Dans ce catalogue, les abréviations suivantes sont utilisées:

   "UR" Utiliser le numéro de pièces spécifié.
   "UN" Utiliser autant que nécessaire.
   "AP" Pièces de substitution
   "LM" Fabrication locale (les pièces doivent être commandées localement.)
   "F#" N° de cadre (applicable au N° de série)
   "O/S" Surdimensionné

3. Nombre de pièces d'un assemblage
   - Les pièces fournies comme composants d'un assemblage sont précédées d'un point (.) de la manière indiquée ci–dessous.
   - Le chiffre apparaissant à la droite de chaque composant indique la quantité de pièces pour chaque unité d'assemblage.

N° PIECES	DESCRIPTION	QTE	REMARQUES
2F5–83310–60	ENS. CLIGNOTANT AVANT	2	
115–83311–60	.AMPOULE (6V–18W)	1	

4. Les couleurs concernant les graphiques sont indiquées dans la colonne "REMARQUES", comme indiqué ci–dessous.

N° PIECES	DESCRIPTION	QTE	REMARQUES
2N4–24110–00–X5	RESERVOIR A ESSENCE.	2	MXR
3J1–24240–10	.GRAPHIQUE	1	POUR MXR

5. Veuillez noter que les illustrations sont indiquées à titre de référence pour trouver les numéros de pièces, non pour être utilisées lors de l'assemblage. Lors de l'assemblage, veuillez utiliser le manuel d'entretien adéquat.

6. L'astérisque (*) placé devant un numéro de référence indique des éléments qui ont été modifiés après la première édition.

CONTENTS

REMOTE CONTROL BOX 1 1
REMOTE CONTROL BOX 2 2
REMOTE CONTROL BOX 3 3
REMOTE CONTROL BOX 4 4
REMOTE CONTROL ASSY 1 5
REMOTE CONTROL ASSY 2 8
REMOTE CONTROL ASSY 3 10
REMOTE CONTROL ASSY 4 13
REMOTE CONTROL ASSY 5 17
REMOTE CONTROL ASSY 6 20
REMOTE CONTROL ASSY 7 23
REMOTE CONTROL ASSY 8 26
REMOTE CONTROL ASSY 9 29
REMOTE CONTROL CABLES 33
LAYOUT CHART 1 (SINGLE) 34
LAYOUT CHART 2 (TWIN) 35
LAYOUT CHART 3 (TRIPLE) 36
DBW REMOTE CONTROL 1 (SINGLE) 37
DBW REMOTE CONTROL 2 (TWIN) 40
DBW REMOTE CONTROL 3 (TRIPLE) 44
SWITCH & PANEL 1 48
SWITCH & PANEL 2 49
SWITCH & PANEL 3 50
SWITCH & PANEL 4 51
SWITCH & PANEL 5 52
SWITCH & PANEL 6 53
SWITCH & PANEL 7 54
SWITCH & PANEL 8 55
SWITCH & PANEL 9 56
SWITCH & PANEL 10 57
SWITCH & PANEL 11 58
SWITCH & PANEL 12 59
SWITCH & PANEL 13 60
WIRE HARNESS 1 61
WIRE HARNESS 2 62
ELECTRICAL DBW REMOTE CONTROL 63
REMO CON ATTACHMENT 1 64
REMO CON ATTACHMENT 2 65
REMO CON ATTACHMENT 3 66
REMO CON ATTACHMENT 4 67
REMO CON ATTACHMENT 5 68
REMO CON ATTACHMENT 6 69
REMO CON ATTACHMENT 7 70
REMO CON ATTACHMENT 8 71
REMO CON ATTACHMENT 9 72
STEERING HOOK 1 73
STEERING HOOK 2 74
STEERING HOOK 3 75
STEERING GUIDE 1 76
STEERING GUIDE 2 77
STEERING GUIDE 3 78
STEERING GUIDE 4 79
STEERING GUIDE 5 80
STEERING GUIDE 6 81
STEERING GUIDE 7 82
STEERING GUIDE 8 83
STEERING GUIDE 9 84
STEERING GUIDE 10 85

INDEX

NUMERICAL INDEX 86

TABLE DES MATIERES

BOITIER DE COMMANDE A DISTANCE 1
BOITIER DE COMMANDE A DISTANCE 2
BOITIER DE COMMANDE A DISTANCE 3
BOITIER DE COMMANDE A DISTANCE 4
BOITIER DE COMMANDE A DISTANCE 5
BOITIER DE COMMANDE A DISTANCE 8
BOITIER DE COMMANDE A DISTANCE 10
BOITIER DE COMMANDE A DISTANCE 13
BOITIER DE COMMANDE A DISTANCE 17
BOITIER DE COMMANDE A DISTANCE 20
BOITIER DE COMMANDE A DISTANCE 23
BOITIER DE COMMANDE A DISTANCE 26
BOITIER DE COMMANDE A DISTANCE 29
CABLE COMMANDE A DISTANCE 33
DIAGRAMME 1 (SIMPLE) 34
DIAGRAMME 2 (DOUBLE) 35
DIAGRAMME 3 (TROIS) 36
BOITIER COMMANDE 1 (SIMPLE) 37
BOITIER COMMANDE 2 (DOUBLE) 40
BOITIER COMMANDE 3 (TROIS) 44
TABLEAU DE CONTACTEUR 1 48
TABLEAU DE CONTACTEUR 2 49
TABLEAU DE CONTACTEUR 3 50
TABLEAU DE CONTACTEUR 4 51
TABLEAU DE CONTACTEUR 5 52
TABLEAU DE CONTACTEUR 6 53
TABLEAU DE CONTACTEUR 7 54
TABLEAU DE CONTACTEUR 8 55
TABLEAU DE CONTACTEUR 9 56
TABLEAU DE CONTACTEUR 10 57
TABLEAU DE CONTACTEUR 11 58
TABLEAU DE CONTACTEUR 12 59
TABLEAU DE CONTACTEUR 13 60
FAISCEAU DE FILS 1 61
FAISCEAU DE FILS 2 62
BOITIER COMMANDE 63
COMMANDE A DISTANCE 1 64
COMMANDE A DISTANCE 2 65
COMMANDE A DISTANCE 3 66
COMMANDE A DISTANCE 4 67
COMMANDE A DISTANCE 5 68
COMMANDE A DISTANCE 6 69
COMMANDE A DISTANCE 7 70
COMMANDE A DISTANCE 8 71
COMMANDE A DISTANCE 9 72
ATTACHE DIRECTION 1 73
ATTACHE DIRECTION 2 74
ATTACHE DIRECTION 3 75
FIXATION DE DIRECTION 1 76
FIXATION DE DIRECTION 2 77
FIXATION DE DIRECTION 3 78
FIXATION DE DIRECTION 4 79
FIXATION DE DIRECTION 5 80
FIXATION DE DIRECTION 6 81
FIXATION DE DIRECTION 7 82
FIXATION DE DIRECTION 8 83
FIXATION DE DIRECTION 9 84
FIXATION DE DIRECTION 10 85

INDEX

INDEX NUMERIQUE 86

CHAPTER 1 REMOTE CONTROL EQUIPMENT

MODEL APPLICATION **1/2CYL.**

MODEL / DEVICE NAME	2 (6F8)	3 (6L5)	4 (6E0)	5 (6E3)	5 (6E4)	6(MBK) (6M8)	8(MBK) (6N0)	9.9 (63V)	15 (63W)
RC ATTACHMENT	*	*	*	*	*	*	*	63V-48501-00	63V-48501-00
RC ATTACHMENT	*	*	*	*	*	*	*	*	*
RC ATTACHMENT	*	*	*	*	*	*	*	*	*
RC ATTACHMENT	*	*	*	*	*	*	*	*	*
STEERING GUIDE (SINGLE)	*	*	*	*	*	*	*	63V-61350-00	63V-61350-00
STEERING GUIDE (SINGLE)	*	*	*	*	*	*	*	*	*
STEERING GUIDE (TWIN)	*	*	*	*	*	*	*	*	*
STEERING GUIDE (TWIN)	*	*	*	*	*	*	*	*	*
701 TYPE RC BOX									
701-48101-23	*	*	*	*	*	*	*	*	*
701-48101-51	*	*	*	*	*	*	*	*	*
701-48101-G1	*	*	*	*	*	*	*	*	*
701-48102-23	*	*	*	*	*	*	*	*	*
701-48102-51	*	*	*	*	*	*	*	*	*
701-48102-G1	*	*	*	*	*	*	*	*	*
701-48130-23	*	*	*	*	*	*	*	*	*
701-48130-E0	*	*	*	*	*	*	*	*	*
701-48140-E0	*	*	*	*	*	*	*	*	*
703 TYPE RC BOX									
703-48204-13	*	*	*	*	*	*	*	*	*
703-48210-16	*	*	*	*	*	*	*	*	*
703-48220-15	*	*	*	*	*	*	*	*	*
703-48230-15	*	*	*	*	*	*	*	*	*
703-48250-17	*	*	*	*	*	*	*	*	*
703-48272-17	*	*	*	*	*	*	*	*	*
703-48201-16	*	*	*	*	*	*	*	○	○
703-48201-A3	*	*	*	*	*	*	*	*	*
703-48202-15	*	*	*	*	*	*	*	*	*
703-48203-15	*	*	*	*	*	*	*	○	○
703-48203-A3	*	*	*	*	*	*	*	*	*
703-48205-17	*	*	*	*	*	*	*	*	*
703-48205-A5	*	*	*	*	*	*	*	*	*
703-48207-17	*	*	*	*	*	*	*	*	*
703-48207-A5	*	*	*	*	*	*	*	*	*
703-48208-A4	*	*	*	*	*	*	*	*	*

TO BE CONTINUED NEXT PAGE

* NOT EQUIPED
RC=REMOTE CONTROL

CHAPTER 1 REMOTE CONTROL EQUIPMENT

MODEL APPLICATION **1/2CYL.**

MODEL / DEVICE NAME	20 (6L3)	25 (6L2)
RC ATTACHMENT	6L2-48501-11	6L2-48501-11
RC ATTACHMENT	*	*
RC ATTACHMENT	*	*
RC ATTACHMENT	*	*
STEERING GUIDE (SINGLE)	*	*
STEERING GUIDE (SINGLE)	*	*
STEERING GUIDE (TWIN)	*	*
STEERING GUIDE (TWIN)	*	*
701 TYPE RC BOX		
701-48101-23	○	○
701-48101-51	○	○
701-48101-G1	*	*
701-48102-23	*	*
701-48102-51	○	○
701-48102-G1	*	*
701-48130-23	*	*
701-48130-E0	*	*
701-48140-E0	*	*
703 TYPE RC BOX		
703-48204-13	*	*
703-48210-16	○	○
703-48220-15	*	*
703-48230-15	○	○
703-48250-17	*	*
703-48272-17	*	*
703-48201-16	*	*
703-48201-A3	*	*
703-48202-15	*	*
703-48203-15	*	*
703-48203-A3	*	*
703-48205-17	*	*
703-48205-A5	*	*
703-48207-17	*	*
703-48207-A5	*	*
703-48208-A4	*	*

TO BE CONTINUED NEXT PAGE

* NOT EQUIPED
RC=REMOTE CONTROL

CHAPTER 1 REMOTE CONTROL EQUIPMENT

MODEL APPLICATION **1/2CYL.**

MODEL / DEVICE NAME	2 (6F8)	3 (6L5)	4 (6E0)	5 (6E3)	5 (6E4)	6(MBK) (6M8)	8(MBK) (6N0)	9.9 (63V)	15 (63W)
704 TYPE RC BOX									
704-48205-B1	*	*	*	*	*	*	*	*	*
704-48203-P1	*	*	*	*	*	*	*	*	*
704-48205-P1	*	*	*	*	*	*	*	*	*
704-48206-P1	*	*	*	*	*	*	*	*	*
704-48207-P1	*	*	*	*	*	*	*	*	*
RC BOX FOR DUAL STATION									
6X3-48206-01	*	*	*	*	*	*	*	*	*
6X5-48207-01	*	*	*	*	*	*	*	*	*
6X6 TYPE									
6X6-48205-00	*	*	*	*	*	*	*	*	*
6X6-48205-10	*	*	*	*	*	*	*	*	*
6X6-48205-20	*	*	*	*	*	*	*	*	*
6X6-48207-00	*	*	*	*	*	*	*	*	*
6X6-48207-10	*	*	*	*	*	*	*	*	*
6X6-48207-20	*	*	*	*	*	*	*	*	*
6X6-48208-20	*	*	*	*	*	*	*	*	*
6X6-48208-30	*	*	*	*	*	*	*	*	*

TO BE CONTINUED NEXT PAGE

* NOT EQUIPED
RC=REMOTE CONTROL

CHAPTER 1 REMOTE CONTROL EQUIPMENT

MODEL APPLICATION **1/2CYL.**

MODEL / DEVICE NAME	20 (6L3)	25 (6L2)
704 TYPE RC BOX		
704-48205-B1	*	*
704-48203-P1	*	*
704-48205-P1	*	*
704-48206-P1	*	*
704-48207-P1	*	*
RC BOX FOR DUAL STATION		
6X3-48206-01	*	*
6X5-48207-01	*	*
6X6 TYPE		
6X6-48205-00	*	*
6X6-48205-10	*	*
6X6-48205-20	*	*
6X6-48207-00	*	*
6X6-48207-10	*	*
6X6-48207-20	*	*
6X6-48208-20	*	*
6X6-48208-30	*	*

TO BE CONTINUED NEXT PAGE

* NOT EQUIPED
RC=REMOTE CONTROL

CHAPTER 1 REMOTE CONTROL EQUIPMENT

MODEL APPLICATION **3 CYL.**

MODEL / DEVICE NAME	30 (6J8)	40 (63B)	40 (63C)	40 (63D)	40 (68P)	50 (62W)	50 (62X)	50 (63G)	60 (6H2)
RC ATTACHMENT	6J8-48501-11	*	*	*	*	*	*	*	*
RC ATTACHMENT	6J8-48501-03-4D	*	*	*	*	*	*	*	*
RC ATTACHMENT	*	*	*	*	*	*	*	*	*
RC ATTACHMENT	*	*	*	*	*	*	*	*	*
STEERING GUIDE (SINGLE)	689-61350-02	63D-61350-00	63D-61350-00	63D-61350-00	63D-61350-00	63D-61350-00	63D-61350-00	63D-61350-00	688-61350-10
STEERING GUIDE (SINGLE)	*	*	*	*	*	*	*	*	*
STEERING GUIDE (TWIN)	*	6E5-61301-01	6E5-61301-01	6E5-61301-01	6E5-61301-01	6E5-61301-01	6E5-61301-01	6E5-61301-01	6E5-61301-01
STEERING GUIDE (TWIN)	*	*	*	*	*	*	*	*	*
701 TYPE RC BOX									
701-48101-23	○	*	*	*	*	*	*	*	*
701-48101-51	○	*	*	*	*	*	*	*	*
701-48101-G1	*	*	*	*	*	*	*	*	*
701-48102-23	*	*	*	*	*	*	*	*	*
701-48102-51	○	*	*	*	*	*	*	*	*
701-48102-G1	*	*	*	*	*	*	*	*	*
701-48130-23	*	○	○	*	*	○	○	○	*
701-48130-E0	*	○	○	*	*	○	○	○	*
701-48140-E0	*	○	○	*	*	○	○	○	*
703 TYPE RC BOX									
703-48204-13	*	*	*	*	*	*	*	*	*
703-48210-16	*	*	*	*	*	*	*	*	*
703-48220-15	*	*	*	*	*	*	*	*	*
703-48230-15	○	*	*	*	*	*	*	*	*
703-48250-17	*	*	*	*	*	*	*	*	*
703-48272-17	*	*	*	*	*	*	*	*	*
703-48201-16	*	○	*	*	*	○	*	○	*
703-48201-A3	*	*	○	○	○	*	○	*	○
703-48202-15	*	*	*	*	*	*	*	*	*
703-48203-15	*	*	*	*	*	*	*	*	○
703-48203-A3	*	○	○	○	○	○	○	○	○
703-48205-17	*	*	*	*	*	*	*	*	○
703-48205-A5	*	*	○	*	*	*	*	*	○
703-48207-17	*	*	*	*	*	*	*	*	*
703-48207-A5	*	*	○	*	*	*	*	*	*
703-48208-A4	*	*	*	*	*	*	*	*	*

TO BE CONTINUED NEXT PAGE

* NOT EQUIPED
RC=REMOTE CONTROL

CHAPTER 1 REMOTE CONTROL EQUIPMENT

MODEL APPLICATION **3 CYL.**

DEVICE NAME \ MODEL	70 (6H3)	75C (67P)	90 (6H1)
RC ATTACHMENT	*	*	*
RC ATTACHMENT	*	*	*
RC ATTACHMENT	*	*	*
RC ATTACHMENT	*	*	*
STEERING GUIDE (SINGLE)	688-61350-10	688-61350-10	688-61350-10
STEERING GUIDE (SINGLE)	*	*	*
STEERING GUIDE (TWIN)	6E5-61301-01	6E5-61301-01	6E5-61301-01
STEERING GUIDE (TWIN)	*	*	*
701 TYPE RC BOX			
701-48101-23	*	*	*
701-48101-51	*	*	*
701-48101-G1	*	*	*
701-48102-23	*	*	*
701-48102-51	*	*	*
701-48102-G1	*	*	*
701-48130-23	*	*	*
701-48130-E0	*	*	*
701-48140-E0	*	*	*
703 TYPE RC BOX			
703-48204-13	*	*	*
703-48210-16	*	*	*
703-48220-15	*	*	*
703-48230-15	*	*	*
703-48250-17	*	*	*
703-48272-17	*	*	*
703-48201-16	*	*	*
703-48201-A3	○	○	○
703-48202-15	*	*	*
703-48203-15	*	*	*
703-48203-A3	○	○	○
703-48205-17	*	*	*
703-48205-A5	○	○	○
703-48207-17	*	*	*
703-48207-A5	*	*	*
703-48208-A4	○	*	*

TO BE CONTINUED NEXT PAGE

* NOT EQUIPED
RC=REMOTE CONTROL

CHAPTER 1 REMOTE CONTROL EQUIPMENT

MODEL APPLICATION **3 CYL.**

MODEL / DEVICE NAME	30 (6J8)	40 (63B)	40 (63C)	40 (63D)	40 (68P)	50 (62W)	50 (62X)	50 (63G)	60 (6H2)
704 TYPE RC BOX									
704-48205-B1	＊	＊	＊	＊	＊	＊	＊	＊	○
704-48203-P1	＊	＊	＊	＊	＊	＊	＊	＊	＊
704-48205-P1	＊	＊	＊	＊	＊	＊	＊	＊	○
704-48206-P1	＊	＊	＊	＊	＊	＊	＊	＊	＊
704-48207-P1	＊	＊	＊	＊	＊	＊	＊	＊	＊
RC BOX FOR DUAL STATION									
6X3-48206-01	＊	＊	＊	＊	＊	＊	＊	＊	＊
6X5-48207-01	＊	＊	＊	＊	＊	＊	＊	＊	＊
6X6 TYPE									
6X6-48205-00	＊	＊	＊	＊	＊	＊	＊	＊	＊
6X6-48205-10	＊	＊	＊	＊	＊	＊	＊	＊	＊
6X6-48205-20	＊	＊	＊	＊	＊	＊	＊	＊	＊
6X6-48207-00	＊	＊	＊	＊	＊	＊	＊	＊	＊
6X6-48207-10	＊	＊	＊	＊	＊	＊	＊	＊	＊
6X6-48207-20	＊	＊	＊	＊	＊	＊	＊	＊	＊
6X6-48208-20	＊	＊	＊	＊	＊	＊	＊	＊	＊
6X6-48208-30	＊	＊	＊	＊	＊	＊	＊	＊	＊

TO BE CONTINUED NEXT PAGE

＊ NOT EQUIPED
RC=REMOTE CONTROL

CHAPTER 1 REMOTE CONTROL EQUIPMENT

MODEL APPLICATION **3 CYL.**

MODEL / DEVICE NAME	70 (6H3)	75C (67P)	90 (6H1)
704 TYPE RC BOX			
704-48205-B1	＊	○	○
704-48203-P1	＊	＊	＊
704-48205-P1	＊	○	○
704-48206-P1	＊	○	○
704-48207-P1	＊	○	○
RC BOX FOR DUAL STATION			
6X3-48206-01	＊	＊	＊
6X5-48207-01	＊	＊	＊
6X6 TYPE			
6X6-48205-00	＊	＊	＊
6X6-48205-10	＊	＊	＊
6X6-48205-20	＊	＊	＊
6X6-48207-00	＊	＊	＊
6X6-48207-10	＊	＊	＊
6X6-48207-20	＊	＊	＊
6X6-48208-20	＊	＊	＊
6X6-48208-30	＊	＊	＊

TO BE CONTINUED NEXT PAGE

＊ NOT EQUIPED
RC=REMOTE CONTROL

CHAPTER 1 REMOTE CONTROL EQUIPMENT

MODEL APPLICATION **V4**

MODEL / DEVICE NAME	115 (6N6)	130 (6N7)
RC ATTACHMENT	＊	＊
RC ATTACHMENT	＊	＊
RC ATTACHMENT	＊	＊
RC ATTACHMENT	＊	＊
STEERING GUIDE (SINGLE)	6E5-61350-02	6E5-61350-02
STEERING GUIDE (SINGLE)	＊	＊
STEERING GUIDE (TWIN)	6E5-61301-01	6E5-61301-01
STEERING GUIDE (TWIN)	*	*
701 TYPE RC BOX		
701-48101-23	＊	＊
701-48101-51	＊	＊
701-48101-G1	＊	＊
701-48102-23	＊	＊
701-48102-51	＊	＊
701-48102-G1	＊	＊
701-48130-23	＊	＊
701-48130-E0	＊	＊
701-48140-E0	＊	＊
703 TYPE RC BOX		
703-48204-13	＊	＊
703-48210-16	＊	＊
703-48220-15	＊	＊
703-48230-15	＊	＊
703-48250-17	＊	＊
703-48272-17	＊	＊
703-48201-16	○	＊
703-48201-A3	＊	＊
703-48202-15	＊	＊
703-48203-15	＊	＊
703-48203-A3	＊	＊
703-48205-17	○	○
703-48205-A5	＊	＊
703-48207-17	○	○
703-48207-A5	＊	＊
703-48208-A4	＊	＊

TO BE CONTINUED NEXT PAGE

＊ NOT EQUIPED
RC=REMOTE CONTROL

CHAPTER 1 REMOTE CONTROL EQUIPMENT

MODEL APPLICATION **V4**

MODEL / DEVICE NAME	115 (6N6)	130 (6N7)
704 TYPE RC BOX		
704-48205-B1	*	*
704-48203-P1	*	*
704-48205-P1	*	*
704-48206-P1	*	*
704-48207-P1	*	*
RC BOX FOR DUAL STATION		
6X3-48206-01	*	*
6X5-48207-01	*	*
6X6 TYPE		
6X6-48205-00	*	*
6X6-48205-10	*	*
6X6-48205-20	*	*
6X6-48207-00	*	*
6X6-48207-10	*	*
6X6-48207-20	*	*
6X6-48208-20	*	*
6X6-48208-30	*	*

TO BE CONTINUED NEXT PAGE

* NOT EQUIPED
RC=REMOTE CONTROL

CHAPTER 1 REMOTE CONTROL EQUIPMENT

MODEL APPLICATION **V6**

MODEL / DEVICE NAME	150 (6G4)	L150 (6K0)	150 (64C)	L150 (64G)	150 (64K)	175 (6G5)	175 (64D)	200 (60H)	L200 (60J)
RC ATTACHMENT	*	*	*	*	*	*	*	*	*
RC ATTACHMENT	*	*	*	*	*	*	*	*	*
RC ATTACHMENT	*	*	*	*	*	*	*	*	*
RC ATTACHMENT	*	*	*	*	*	*	*	*	*
STEERING GUIDE (SINGLE)	6E5-61350-02	6E5-61350-02	6E5-61350-02	6E5-61350-02	6E5-61350-02	6E5-61350-02	6E5-61350-02	6E5-61350-02	6E5-61350-02
STEERING GUIDE (SINGLE)	*	*	*	*	*	*	*	*	*
STEERING GUIDE (TWIN)	6E5-61301-01	6E5-61301-01	6E5-61301-01	6E5-61301-01	6E5-61301-01	6E5-61301-01	6E5-61301-01	6E5-61301-01	6E5-61301-01
STEERING GUIDE (TWIN)	*	*	*	*	*	*	*	*	*
701 TYPE RC BOX									
701-48101-23	*	*	*	*	*	*	*	*	*
701-48101-51	*	*	*	*	*	*	*	*	*
701-48101-G1	*	*	*	*	*	*	*	*	*
701-48102-23	*	*	*	*	*	*	*	*	*
701-48102-51	*	*	*	*	*	*	*	*	*
701-48102-G1	*	*	*	*	*	*	*	*	*
701-48130-23	*	*	*	*	*	*	*	*	*
701-48130-E0	*	*	*	*	*	*	*	*	*
701-48140-E0	*	*	*	*	*	*	*	*	*
703 TYPE RC BOX									
703-48204-13	*	*	*	*	*	*	*	*	*
703-48210-16	*	*	*	*	*	*	*	*	*
703-48220-15	*	*	*	*	*	*	*	*	*
703-48230-15	*	*	*	*	*	*	*	*	*
703-48250-17	*	*	*	*	*	*	*	*	*
703-48272-17	*	*	*	*	*	*	*	*	*
703-48201-16	*	*	*	*	*	*	*	*	*
703-48201-A3	*	*	*	*	*	*	*	*	*
703-48202-15	*	*	*	*	*	*	*	*	*
703-48203-15	*	*	*	*	*	*	*	*	*
703-48203-A3	*	*	*	*	*	*	*	*	*
703-48205-17	○	*	○	*	○	○	○	○	*
703-48205-A5	*	*	*	*	*	*	*	*	*
703-48207-17	*	*	○	*	*	*	*	*	*
703-48207-A5	*	*	*	*	*	*	*	*	*
703-48208-A4	*	*	*	*	*	*	*	*	*

TO BE CONTINUED NEXT PAGE

* NOT EQUIPED
RC=REMOTE CONTROL

CHAPTER 1 REMOTE CONTROL EQUIPMENT

MODEL APPLICATION **V6**

DEVICE NAME \ MODEL	200 (64E)	L200 (64H)	200 (64M)	225 (64F)	250 (6S3)	L250 (6S4)
RC ATTACHMENT	*	*	*	*	*	*
RC ATTACHMENT	*	*	*	*	*	*
RC ATTACHMENT	*	*	*	*	*	*
RC ATTACHMENT	*	*	*	*	*	*
STEERING GUIDE (SINGLE)	6E5-61350-02	6E5-61350-02	6E5-61350-02	6E5-61350-02	6E5-61350-02	6E5-61350-02
STEERING GUIDE (SINGLE)	*	*	*	*	*	*
STEERING GUIDE (TWIN)	6E5-61301-01	6E5-61301-01	6E5-61301-01	6E5-61301-01	6E5-61301-01	6E5-61301-01
STEERING GUIDE (TWIN)	*	*	*	*	*	*
701 TYPE RC BOX						
701-48101-23	*	*	*	*	*	*
701-48101-51	*	*	*	*	*	*
701-48101-G1	*	*	*	*	*	*
701-48102-23	*	*	*	*	*	*
701-48102-51	*	*	*	*	*	*
701-48102-G1	*	*	*	*	*	*
701-48130-23	*	*	*	*	*	*
701-48130-E0	*	*	*	*	*	*
701-48140-E0	*	*	*	*	*	*
703 TYPE RC BOX						
703-48204-13	*	*	*	*	*	*
703-48210-16	*	*	*	*	*	*
703-48220-15	*	*	*	*	*	*
703-48230-15	*	*	*	*	*	*
703-48250-17	*	*	*	*	*	*
703-48272-17	*	*	*	*	*	*
703-48201-16	*	*	*	*	*	*
703-48201-A3	*	*	*	*	*	*
703-48202-15	*	*	*	*	*	*
703-48203-15	*	*	*	*	*	*
703-48203-A3	*	*	*	*	*	*
703-48205-17	○	*	○	○	*	*
703-48205-A5	*	*	*	*	*	*
703-48207-17	*	*	*	*	*	*
703-48207-A5	*	*	*	*	*	*
703-48208-A4	*	*	*	*	*	*

TO BE CONTINUED NEXT PAGE

* NOT EQUIPED
RC=REMOTE CONTROL

CHAPTER 1 REMOTE CONTROL EQUIPMENT

MODEL APPLICATION **V6**

MODEL / DEVICE NAME	150 (6G4)	L150 (6K0)	150 (64C)	L150 (64G)	150 (64K)	175 (6G5)	175 (64D)	200 (60H)	L200 (60J)
704 TYPE RC BOX									
704-48205-B1	○	＊	○	＊	○	○	○	○	＊
704-48203-P1	＊	＊	＊	＊	＊	＊	＊	＊	＊
704-48205-P1	○	＊	○	＊	○	○	○	○	＊
704-48206-P1	○	＊	○	＊	○	○	○	○	＊
704-48207-P1	○	○	○	○	○	○	○	○	○
RC BOX FOR DUAL STATION									
6X3-48206-01	＊	＊	＊	＊	＊	＊	＊	＊	＊
6X5-48207-01	＊	＊	＊	＊	＊	＊	＊	＊	＊
6X6 TYPE									
6X6-48205-00	＊	＊	＊	＊	＊	＊	＊	＊	＊
6X6-48205-10	＊	＊	＊	＊	＊	＊	＊	＊	＊
6X6-48205-20	＊	＊	＊	＊	＊	＊	＊	＊	＊
6X6-48207-00	＊	＊	＊	＊	＊	＊	＊	＊	＊
6X6-48207-10	＊	＊	＊	＊	＊	＊	＊	＊	＊
6X6-48207-20	＊	＊	＊	＊	＊	＊	＊	＊	＊
6X6-48208-20	＊	＊	＊	＊	＊	＊	＊	＊	＊
6X6-48208-30	＊	＊	＊	＊	＊	＊	＊	＊	＊

TO BE CONTINUED NEXT PAGE

＊ NOT EQUIPED
RC=REMOTE CONTROL

CHAPTER 1 REMOTE CONTROL EQUIPMENT

MODEL APPLICATION **V6**

MODEL / DEVICE NAME	200 (64E)	L200 (64H)	200 (64M)	225 (64F)	250 (6S3)	L250 (6S4)
704 TYPE RC BOX						
704-48205-B1	○	＊	○	○	＊	＊
704-48203-P1	＊	＊	＊	＊	＊	＊
704-48205-P1	○	＊	○	○	＊	＊
704-48206-P1	○	＊	○	○	＊	＊
704-48207-P1	○	○	○	○	＊	＊
RC BOX FOR DUAL STATION						
6X3-48206-01	＊	＊	＊	＊	＊	＊
6X5-48207-01	＊	＊	＊	＊	＊	＊
6X6 TYPE						
6X6-48205-00	＊	＊	＊	＊	＊	＊
6X6-48205-10	＊	＊	＊	＊	＊	＊
6X6-48205-20	＊	＊	＊	＊	＊	＊
6X6-48207-00	＊	＊	＊	＊	＊	＊
6X6-48207-10	＊	＊	＊	＊	＊	＊
6X6-48207-20	＊	＊	＊	＊	＊	＊
6X6-48208-20	＊	＊	＊	＊	＊	＊
6X6-48208-30	＊	＊	＊	＊	＊	＊

TO BE CONTINUED NEXT PAGE

＊ NOT EQUIPED
RC=REMOTE CONTROL

CHAPTER 1 REMOTE CONTROL EQUIPMENT

MODEL APPLICATION **V6 HPDI**

MODEL / DEVICE NAME	Z150 (68H)	Z150 (68J)	LZ150 (68K)	Z175 (68L)	Z175 (68M)	Z200 (60F)	Z200 (68F)	LZ200 (68G)	Z200 (6P5)
RC ATTACHMENT	*	*	*	*	*	*	*	*	*
RC ATTACHMENT	*	*	*	*	*	*	*	*	*
RC ATTACHMENT	*	*	*	*	*	*	*	*	*
RC ATTACHMENT	*	*	*	*	*	*	*	*	*
STEERING GUIDE (SINGLE)	6E5-61350-02	6E5-61350-02	6E5-61350-02	6E5-61350-02	6E5-61350-02	6E5-61350-02	6E5-61350-02	6E5-61350-02	6E5-61350-02
STEERING GUIDE (SINGLE)	*	*	*	*	*	*	*	*	*
STEERING GUIDE (TWIN)	6E5-61301-01	6E5-61301-01	6E5-61301-01	6E5-61301-01	6E5-61301-01	6E5-61301-01	6E5-61301-01	6E5-61301-01	6E5-61301-01
STEERING GUIDE (TWIN)	*	*	*	*	*	*	*	*	*
701 TYPE RC BOX									
701-48101-23	*	*	*	*	*	*	*	*	*
701-48101-51	*	*	*	*	*	*	*	*	*
701-48101-G1	*	*	*	*	*	*	*	*	*
701-48102-23	*	*	*	*	*	*	*	*	*
701-48102-51	*	*	*	*	*	*	*	*	*
701-48102-G1	*	*	*	*	*	*	*	*	*
701-48130-23	*	*	*	*	*	*	*	*	*
701-48130-E0	*	*	*	*	*	*	*	*	*
701-48140-E0	*	*	*	*	*	*	*	*	*
703 TYPE RC BOX									
703-48204-13	*	*	*	*	*	*	*	*	*
703-48210-16	*	*	*	*	*	*	*	*	*
703-48220-15	*	*	*	*	*	*	*	*	*
703-48230-15	*	*	*	*	*	*	*	*	*
703-48250-17	*	*	*	*	*	*	*	*	*
703-48272-17	*	*	*	*	*	*	*	*	*
703-48201-16	*	*	*	*	*	*	*	*	*
703-48201-A3	*	*	*	*	*	*	*	*	*
703-48202-15	*	*	*	*	*	*	*	*	*
703-48203-15	*	*	*	*	*	*	*	*	*
703-48203-A3	*	*	*	*	*	*	*	*	*
703-48205-17	*	*	*	*	*	*	*	*	*
703-48205-A5	*	*	*	*	*	*	*	*	*
703-48207-17	○	○	○	○	○	○	○	○	○
703-48207-A5	*	*	*	*	*	*	*	*	*
703-48208-A4	*	*	*	*	*	*	*	*	*

TO BE CONTINUED NEXT PAGE

* NOT EQUIPED
RC=REMOTE CONTROL

CHAPTER 1 REMOTE CONTROL EQUIPMENT

MODEL APPLICATION V6 HPDI

MODEL / DEVICE NAME	Z225 (60Y)	Z250 (60X)	Z300 (6C9)	Z300 (6D0)	LZ300 (6D1)
RC ATTACHMENT	*	*	*	*	*
RC ATTACHMENT	*	*	*	*	*
RC ATTACHMENT	*	*	*	*	*
RC ATTACHMENT	*	*	*	*	*
STEERING GUIDE (SINGLE)	6E5-61350-02	6E5-61350-02	6E5-61350-02	6E5-61350-02	6E5-61350-02
STEERING GUIDE (SINGLE)	*	*	*	*	*
STEERING GUIDE (TWIN)	6E5-61301-01	6E5-61301-01	6E5-61301-01	6E5-61301-01	6E5-61301-01
STEERING GUIDE (TWIN)	*	*	*	*	*
701 TYPE RC BOX					
701-48101-23	*	*	*	*	*
701-48101-51	*	*	*	*	*
701-48101-G1	*	*	*	*	*
701-48102-23	*	*	*	*	*
701-48102-51	*	*	*	*	*
701-48102-G1	*	*	*	*	*
701-48130-23	*	*	*	*	*
701-48130-E0	*	*	*	*	*
701-48140-E0	*	*	*	*	*
703 TYPE RC BOX					
703-48204-13	*	*	*	*	*
703-48210-16	*	*	*	*	*
703-48220-15	*	*	*	*	*
703-48230-15	*	*	*	*	*
703-48250-17	*	*	*	*	*
703-48272-17	*	*	*	*	*
703-48201-16	*	*	*	*	*
703-48201-A3	*	*	*	*	*
703-48202-15	*	*	*	*	*
703-48203-15	*	*	*	*	*
703-48203-A3	*	*	*	*	*
703-48205-17	*	*	*	*	*
703-48205-A5	*	*	*	*	*
703-48207-17	○	○	○	○	○
703-48207-A5	*	*	*	*	*
703-48208-A4	*	*	*	*	*

TO BE CONTINUED NEXT PAGE

* NOT EQUIPED
RC=REMOTE CONTROL

MODEL APPLICATION **V6 HPDI**

MODEL / DEVICE NAME	Z150 (68H)	Z150 (68J)	LZ150 (68K)	Z175 (68L)	Z175 (68M)	Z200 (60F)	Z200 (68F)	LZ200 (68G)	Z200 (6P5)
704 TYPE RC BOX									
704-48205-B1	○	○	＊	○	○	○	○	＊	○
704-48203-P1	＊	＊	＊	＊	＊	＊	＊	＊	＊
704-48205-P1	○	○	＊	○	○	○	○	＊	○
704-48206-P1	○	○	○	○	○	○	○	○	○
704-48207-P1	＊	＊	○	＊	＊	＊	＊	○	＊
RC BOX FOR DUAL STATION									
6X3-48206-01	○	○	＊	○	○	○	○	＊	○
6X5-48207-01	○	○	○	○	○	○	○	○	○
6X6 TYPE									
6X6-48205-00	＊	＊	＊	＊	＊	＊	＊	＊	＊
6X6-48205-10	＊	＊	＊	＊	＊	＊	＊	＊	＊
6X6-48205-20	＊	＊	＊	＊	＊	＊	＊	＊	＊
6X6-48207-00	＊	＊	＊	＊	＊	＊	＊	＊	＊
6X6-48207-10	＊	＊	＊	＊	＊	＊	＊	＊	＊
6X6-48207-20	＊	＊	＊	＊	＊	＊	＊	＊	＊
6X6-48208-20	＊	＊	＊	＊	＊	＊	＊	＊	＊
6X6-48208-30	＊	＊	＊	＊	＊	＊	＊	＊	＊

TO BE CONTINUED NEXT PAGE

＊ NOT EQUIPED
RC=REMOTE CONTROL

CHAPTER 1 REMOTE CONTROL EQUIPMENT

MODEL APPLICATION **V6 HPDI**

MODEL / DEVICE NAME	Z225 (60Y)	Z250 (60X)	Z300 (6C9)	Z300 (6D0)	LZ300 (6D1)
704 TYPE RC BOX					
704-48205-B1	○	○	○	○	＊
704-48203-P1	＊	＊	＊	＊	＊
704-48205-P1	○	○	○	○	＊
704-48206-P1	○	○	○	○	○
704-48207-P1	＊	＊	＊	＊	○
RC BOX FOR DUAL STATION					
6X3-48206-01	○	○	○	○	＊
6X5-48207-01	○	○	○	○	○
6X6 TYPE					
6X6-48205-00	＊	＊	＊	＊	＊
6X6-48205-10	＊	＊	＊	＊	＊
6X6-48205-20	＊	＊	＊	＊	＊
6X6-48207-00	＊	＊	＊	＊	＊
6X6-48207-10	＊	＊	＊	＊	＊
6X6-48207-20	＊	＊	＊	＊	＊
6X6-48208-20	＊	＊	＊	＊	＊
6X6-48208-30	＊	＊	＊	＊	＊

TO BE CONTINUED NEXT PAGE

＊ NOT EQUIPED
RC=REMOTE CONTROL

CHAPTER 1 REMOTE CONTROL EQUIPMENT

MODEL APPLICATION ORIGIN

MODEL / DEVICE NAME	25 (69R)	25 (69X)	30 (69S)	55 (697)	55 (63S)	75 (692)	85 (688)	115 (6E5)	140 (6F3)
RC ATTACHMENT	689-48501-01-4D	689-48501-01-4D	689-48501-01-4D	*	*	*	*	*	*
RC ATTACHMENT	689-48501-21-4D	689-48501-21-4D	689-48501-21-4D	*	*	*	*	*	*
RC ATTACHMENT	*	*	*	*	*	*	*	*	*
RC ATTACHMENT	*	*	*	*	*	*	*	*	*
STEERING GUIDE (SINGLE)	689-61350-02	689-61350-02	689-61350-02	697-61350-00	688-61350-10	688-61350-10	688-61350-10	6E5-61350-02	6E5-61350-02
STEERING GUIDE (SINGLE)	*	*	*	*	*	*	*	*	*
STEERING GUIDE (TWIN)	*	*	*	6E5-61301-01	6E5-61301-01	6E5-61301-01	6E5-61301-01	6E5-61301-01	6E5-61301-01
STEERING GUIDE (TWIN)	*	*	*	*	*	*	*	*	*
701 TYPE RC BOX									
701-48101-23	*	*	*	*	*	*	*	*	*
701-48101-51	*	*	*	○	*	*	*	*	*
701-48101-G1	*	*	*	*	*	*	*	*	*
701-48102-23	*	*	*	*	*	*	*	*	*
701-48102-51	*	*	*	*	*	*	*	*	*
701-48102-G1	*	*	*	*	*	*	*	*	*
701-48130-23	*	*	*	*	*	○	*	*	*
701-48130-E0	*	*	*	*	*	*	*	*	*
701-48140-E0	*	*	*	*	*	*	*	*	*
703 TYPE RC BOX									
703-48204-13	*	*	*	○	*	*	*	*	*
703-48210-16	*	*	*	*	*	*	*	*	*
703-48220-15	*	*	*	*	*	*	*	*	*
703-48230-15	*	*	*	○	*	*	*	*	*
703-48250-17	*	*	*	○	*	*	*	*	*
703-48272-17	*	*	*	○	*	*	*	*	*
703-48201-16	*	*	*	*	*	*	*	○	○
703-48201-A3	*	*	*	*	*	*	*	*	*
703-48202-15	*	*	*	*	*	*	*	○	○
703-48203-15	*	*	*	*	*	○	○	*	*
703-48203-A3	*	*	*	*	*	*	*	*	*
703-48205-17	*	*	*	*	*	*	*	○	○
703-48205-A5	*	*	*	*	*	*	*	*	*
703-48207-17	*	*	*	*	*	○	○	○	*
703-48207-A5	*	*	*	*	*	*	*	*	*
703-48208-A4	*	*	*	*	*	*	*	*	*

TO BE CONTINUED NEXT PAGE

* NOT EQUIPED
RC=REMOTE CONTROL

CHAPTER 1 REMOTE CONTROL EQUIPMENT

MODEL APPLICATION ORIGIN

MODEL / DEVICE NAME	25 (69R)	25 (69X)	30 (69S)	55 (697)	55 (63S)	75 (692)	85 (688)	115 (6E5)	140 (6F3)
704 TYPE RC BOX									
704-48205-B1	＊	＊	＊	○	＊	○	○	○	○
704-48203-P1	＊	＊	＊	＊	＊	＊	＊	＊	＊
704-48205-P1	＊	＊	＊	○	＊	○	○	○	○
704-48206-P1	＊	＊	＊	○	＊	○	○	○	○
704-48207-P1	＊	＊	＊	○	＊	○	○	○	○
RC BOX FOR DUAL STATION									
6X3-48206-01	＊	＊	＊	＊	＊	＊	＊	＊	＊
6X5-48207-01	＊	＊	＊	＊	＊	＊	＊	＊	＊
6X6 TYPE									
6X6-48205-00	＊	＊	＊	＊	＊	＊	＊	＊	＊
6X6-48205-10	＊	＊	＊	＊	＊	＊	＊	＊	＊
6X6-48205-20	＊	＊	＊	＊	＊	＊	＊	＊	＊
6X6-48207-00	＊	＊	＊	＊	＊	＊	＊	＊	＊
6X6-48207-10	＊	＊	＊	＊	＊	＊	＊	＊	＊
6X6-48207-20	＊	＊	＊	＊	＊	＊	＊	＊	＊
6X6-48208-20	＊	＊	＊	＊	＊	＊	＊	＊	＊
6X6-48208-30	＊	＊	＊	＊	＊	＊	＊	＊	＊

TO BE CONTINUED NEXT PAGE

＊ NOT EQUIPED
RC=REMOTE CONTROL

CHAPTER 1 REMOTE CONTROL EQUIPMENT

MODEL APPLICATION **ENDURO**

MODEL / DEVICE NAME	E8 (677)	E9.9 (6B3)	E15 (6B4)	E25 (69P)	E30 (60B)	E40 (66T)	E40 (6F6)	E40 (6J4)	E48 (696)
RC ATTACHMENT	655-48501-02	*	*	689-48501-01-4D	689-48501-01-4D	66T-48501-01	*	*	*
RC ATTACHMENT	655-48501-10	*	*	689-48501-21-4D	689-48501-21-4D	*	*	*	*
RC ATTACHMENT	*	*	*	*	*	*	*	*	*
RC ATTACHMENT	*	*	*	*	*	*	*	*	*
STEERING GUIDE (SINGLE)	*	63V-61350-00	63V-61350-00	689-61350-02	689-61350-02	65W-61350-00	689-61350-02	689-61350-02	*
STEERING GUIDE (SINGLE)	*	*	*	*	*	*	*	*	*
STEERING GUIDE (TWIN)	*	*	*	*	*	*	*	*	*
STEERING GUIDE (TWIN)	*	*	*	*	*	*	*	*	*
701 TYPE RC BOX									
701-48101-23	*	*	*	*	*	*	*	*	○
701-48101-51	*	*	*	*	*	*	*	*	*
701-48101-G1	*	*	*	*	*	*	*	*	*
701-48102-23	*	*	*	*	*	*	*	*	*
701-48102-51	*	*	*	*	*	*	*	*	*
701-48102-G1	*	*	*	*	*	*	*	*	*
701-48130-23	*	*	*	*	*	*	*	*	*
701-48130-E0	*	*	*	*	*	*	*	*	*
701-48140-E0	*	*	*	*	*	*	*	*	*
703 TYPE RC BOX									
703-48204-13	*	*	*	*	*	*	*	*	*
703-48210-16	*	*	*	*	*	*	*	*	*
703-48220-15	*	*	*	*	*	*	*	*	*
703-48230-15	*	*	*	*	*	*	*	○	*
703-48250-17	*	*	*	*	*	*	*	*	*
703-48272-17	*	*	*	*	*	*	*	*	*
703-48201-16	*	*	*	*	*	*	*	*	*
703-48201-A3	*	*	*	*	*	*	*	*	*
703-48202-15	*	*	*	*	*	*	*	*	*
703-48203-15	*	*	*	*	*	*	*	*	*
703-48203-A3	*	*	*	*	*	*	*	*	*
703-48205-17	*	*	*	*	*	*	*	*	*
703-48205-A5	*	*	*	*	*	*	*	*	*
703-48207-17	*	*	*	*	*	*	*	*	*
703-48207-A5	*	*	*	*	*	*	*	*	*
703-48208-A4	*	*	*	*	*	*	*	*	*

TO BE CONTINUED NEXT PAGE

* NOT EQUIPED
RC=REMOTE CONTROL

CHAPTER 1 REMOTE CONTROL EQUIPMENT

MODEL APPLICATION **ENDURO**

DEVICE NAME \ MODEL	E55 (6A3)	E60 (69D)	E60 (64S)	E65 (65S)	E75 (692)	E115 (61U)	E115TUNA (61U)
RC ATTACHMENT	＊	＊	＊	＊	＊	＊	＊
RC ATTACHMENT	＊	＊	＊	＊	＊	＊	＊
RC ATTACHMENT	＊	＊	＊	＊	＊	＊	＊
RC ATTACHMENT	＊	＊	＊	＊	＊	＊	＊
STEERING GUIDE (SINGLE)	＊	688-61350-10	＊	＊	＊	＊	＊
STEERING GUIDE (SINGLE)	＊	＊	＊	＊	＊	＊	＊
STEERING GUIDE (TWIN)	＊	＊	＊	＊	＊	＊	＊
STEERING GUIDE (TWIN)	＊	＊	＊	＊	＊	＊	＊
701 TYPE RC BOX							
701-48101-23	○	＊	＊	＊	＊	＊	＊
701-48101-51	＊	＊	＊	＊	＊	＊	＊
701-48101-G1	＊	＊	＊	＊	＊	＊	＊
701-48102-23	＊	＊	＊	＊	＊	＊	＊
701-48102-51	＊	＊	＊	＊	＊	＊	＊
701-48102-G1	＊	＊	＊	＊	＊	＊	＊
701-48130-23	＊	＊	＊	＊	＊	＊	＊
701-48130-E0	＊	＊	＊	＊	＊	＊	＊
701-48140-E0	＊	＊	＊	＊	＊	＊	＊
703 TYPE RC BOX							
703-48204-13	＊	＊	＊	＊	＊	＊	＊
703-48210-16	＊	＊	＊	＊	＊	＊	＊
703-48220-15	＊	＊	＊	＊	＊	＊	＊
703-48230-15	＊	＊	＊	＊	＊	＊	＊
703-48250-17	＊	＊	＊	＊	＊	＊	＊
703-48272-17	＊	＊	＊	＊	＊	＊	＊
703-48201-16	＊	＊	＊	＊	＊	○	○
703-48201-A3	＊	＊	＊	＊	＊	＊	＊
703-48202-15	＊	＊	＊	＊	＊	＊	＊
703-48203-15	＊	＊	＊	＊	＊	＊	＊
703-48203-A3	＊	＊	＊	＊	＊	＊	＊
703-48205-17	＊	＊	＊	＊	＊	○	○
703-48205-A5	＊	＊	＊	＊	＊	＊	＊
703-48207-17	＊	＊	＊	＊	＊	＊	＊
703-48207-A5	＊	＊	＊	＊	＊	＊	＊
703-48208-A4	＊	＊	＊	＊	＊	＊	＊

TO BE CONTINUED NEXT PAGE

＊ NOT EQUIPED
RC=REMOTE CONTROL

CHAPTER 1 REMOTE CONTROL EQUIPMENT

MODEL APPLICATION **ENDURO**

MODEL / DEVICE NAME	E8 (677)	E9.9 (6B3)	E15 (6B4)	E25 (69P)	E30 (60B)	E40 (66T)	E40 (6F6)	E40 (6J4)	E48 (696)
704 TYPE RC BOX									
704-48205-B1	*	*	*	*	*	*	*	*	*
704-48203-P1	*	*	*	*	*	*	*	*	*
704-48205-P1	*	*	*	*	*	*	*	*	*
704-48206-P1	*	*	*	*	*	*	*	*	*
704-48207-P1	*	*	*	*	*	*	*	*	*
RC BOX FOR DUAL STATION									
6X3-48206-01	*	*	*	*	*	*	*	*	*
6X5-48207-01	*	*	*	*	*	*	*	*	*
6X6 TYPE									
6X6-48205-00	*	*	*	*	*	*	*	*	*
6X6-48205-10	*	*	*	*	*	*	*	*	*
6X6-48205-20	*	*	*	*	*	*	*	*	*
6X6-48207-00	*	*	*	*	*	*	*	*	*
6X6-48207-10	*	*	*	*	*	*	*	*	*
6X6-48207-20	*	*	*	*	*	*	*	*	*
6X6-48208-20	*	*	*	*	*	*	*	*	*
6X6-48208-30	*	*	*	*	*	*	*	*	*

TO BE CONTINUED NEXT PAGE

* NOT EQUIPED
RC=REMOTE CONTROL

CHAPTER 1 REMOTE CONTROL EQUIPMENT

MODEL APPLICATION **ENDURO**

DEVICE NAME \ MODEL	E55 (6A3)	E60 (69D)	E60 (64S)	E65 (65S)	E75 (692)	E115 (61U)	E115TUNA (61U)
704 TYPE RC BOX							
704-48205-B1	＊	＊	＊	＊	＊	○	○
704-48203-P1	＊	＊	＊	＊	＊	＊	＊
704-48205-P1	＊	＊	＊	＊	＊	○	○
704-48206-P1	＊	＊	＊	＊	＊	○	○
704-48207-P1	＊	＊	＊	＊	＊	＊	＊
RC BOX FOR DUAL STATION							
6X3-48206-01	＊	＊	＊	＊	＊	＊	＊
6X5-48207-01	＊	＊	＊	＊	＊	＊	＊
6X6 TYPE							
6X6-48205-00	＊	＊	＊	＊	＊	＊	＊
6X6-48205-10	＊	＊	＊	＊	＊	＊	＊
6X6-48205-20	＊	＊	＊	＊	＊	＊	＊
6X6-48207-00	＊	＊	＊	＊	＊	＊	＊
6X6-48207-10	＊	＊	＊	＊	＊	＊	＊
6X6-48207-20	＊	＊	＊	＊	＊	＊	＊
6X6-48208-20	＊	＊	＊	＊	＊	＊	＊
6X6-48208-30	＊	＊	＊	＊	＊	＊	＊

TO BE CONTINUED NEXT PAGE

＊ NOT EQUIPED
RC=REMOTE CONTROL

CHAPTER 1 REMOTE CONTROL EQUIPMENT

MODEL APPLICATION **KEROSENE**

MODEL / DEVICE NAME	EK8 (680)	EK9.9 (6B7)	EK9.9 (6B9)	EK15 (6B8)	EK15 (6C0)	EK25 (69T)	EK25 (6S63)	EK40 (6F5)	EK40 (6H9)
RC ATTACHMENT	655-48501-02	*	*	*	*	*	*	*	*
RC ATTACHMENT	655-48501-10	*	*	*	*	*	*	*	*
RC ATTACHMENT	*	*	*	*	*	*	*	*	*
RC ATTACHMENT	*	*	*	*	*	*	*	*	*
STEERING GUIDE (SINGLE)	*	*	*	*	*	*	*	*	689-61350-02
STEERING GUIDE (SINGLE)	*	*	*	*	*	*	*	*	*
STEERING GUIDE (TWIN)	*	*	*	*	*	*	*	*	*
STEERING GUIDE (TWIN)	*	*	*	*	*	*	*	*	*
701 TYPE RC BOX									
701-48101-23	*	*	*	*	*	*	*	*	*
701-48101-51	*	*	*	*	*	*	*	*	*
701-48101-G1	*	*	*	*	*	*	*	*	*
701-48102-23	*	*	*	*	*	*	*	*	*
701-48102-51	*	*	*	*	*	*	*	*	*
701-48102-G1	*	*	*	*	*	*	*	*	*
701-48130-23	*	*	*	*	*	*	*	*	*
701-48130-E0	*	*	*	*	*	*	*	*	*
701-48140-E0	*	*	*	*	*	*	*	*	*
703 TYPE RC BOX									
703-48204-13	*	*	*	*	*	*	*	*	○
703-48210-16	*	*	*	*	*	*	*	*	*
703-48220-15	*	*	*	*	*	*	*	*	*
703-48230-15	*	*	*	*	*	*	*	*	*
703-48250-17	*	*	*	*	*	*	*	*	*
703-48272-17	*	*	*	*	*	*	*	*	*
703-48201-16	*	*	*	*	*	*	*	*	*
703-48201-A3	*	*	*	*	*	*	*	*	*
703-48202-15	*	*	*	*	*	*	*	*	*
703-48203-15	*	*	*	*	*	*	*	*	*
703-48203-A3	*	*	*	*	*	*	*	*	*
703-48205-17	*	*	*	*	*	*	*	*	*
703-48205-A5	*	*	*	*	*	*	*	*	*
703-48207-17	*	*	*	*	*	*	*	*	*
703-48207-A5	*	*	*	*	*	*	*	*	*
703-48208-A4	*	*	*	*	*	*	*	*	*

TO BE CONTINUED NEXT PAGE

* NOT EQUIPED
RC=REMOTE CONTROL

CHAPTER 1 REMOTE CONTROL EQUIPMENT

MODEL APPLICATION **KEROSENE**

MODEL / DEVICE NAME	EK8 (680)	EK9.9 (6B7)	EK9.9 (6B9)	EK15 (6B8)	EK15 (6C0)	EK25 (69T)	EK25 (6S63)	EK40 (6F5)	EK40 (6H9)
704 TYPE RC BOX									
704-48205-B1	*	*	*	*	*	*	*	*	*
704-48203-P1	*	*	*	*	*	*	*	*	*
704-48205-P1	*	*	*	*	*	*	*	*	*
704-48206-P1	*	*	*	*	*	*	*	*	*
704-48207-P1	*	*	*	*	*	*	*	*	*
RC BOX FOR DUAL STATION									
6X3-48206-01	*	*	*	*	*	*	*	*	*
6X5-48207-01	*	*	*	*	*	*	*	*	*
6X6 TYPE									
6X6-48205-00	*	*	*	*	*	*	*	*	*
6X6-48205-10	*	*	*	*	*	*	*	*	*
6X6-48205-20	*	*	*	*	*	*	*	*	*
6X6-48207-00	*	*	*	*	*	*	*	*	*
6X6-48207-10	*	*	*	*	*	*	*	*	*
6X6-48207-20	*	*	*	*	*	*	*	*	*
6X6-48208-20	*	*	*	*	*	*	*	*	*
6X6-48208-30	*	*	*	*	*	*	*	*	*

TO BE CONTINUED NEXT PAGE

* NOT EQUIPED
RC=REMOTE CONTROL

CHAPTER 1 REMOTE CONTROL EQUIPMENT

MODEL APPLICATION 4 CYCLE

MODEL / DEVICE NAME	F2 (6S7)	F2.5 (69M)	F4 (68D)	F6 (60N)	F8 (60R)	FT8 (60S)	F9.9 (66N)	F9.9 (6AU)	F9.9 (69B)
RC ATTACHMENT	*	*	*	60R-G8501-00	60R-G8501-00	60R-G8501-00	66M-48501-00	6AU-48501-00	66M-48501-00
RC ATTACHMENT	*	*	*	*	*	*	*	*	*
RC ATTACHMENT	*	*	*	*	*	*	*	*	*
RC ATTACHMENT	*	*	*	*	*	*	*	*	*
STEERING GUIDE (SINGLE)	*	*	*	68T-61350-10	68T-61350-10	68T-61350-10	63V-61350-00	68T-61350-10	63V-61350-00
STEERING GUIDE (SINGLE)	*	*	*	*	*	*	*	*	*
STEERING GUIDE (TWIN)	*	*	*	*	*	*	*	*	*
STEERING GUIDE (TWIN)	*	*	*	*	*	*	*	*	*
701 TYPE RC BOX									
701-48101-23	*	*	*	*	*	*	*	*	*
701-48101-51	*	*	*	*	*	*	*	*	*
701-48101-G1	*	*	*	*	*	*	*	*	*
701-48102-23	*	*	*	*	*	*	*	*	*
701-48102-51	*	*	*	*	*	*	*	*	*
701-48102-G1	*	*	*	*	*	*	*	*	*
701-48130-23	*	*	*	*	*	*	*	*	*
701-48130-E0	*	*	*	*	*	*	*	*	*
701-48140-E0	*	*	*	*	*	*	*	*	*
703 TYPE RC BOX									
703-48204-13	*	*	*	*	*	*	*	*	*
703-48210-16	*	*	*	*	*	*	*	*	*
703-48220-15	*	*	*	*	*	*	*	*	*
703-48230-15	*	*	*	*	*	*	*	*	*
703-48250-17	*	*	*	*	*	*	*	*	*
703-48272-17	*	*	*	*	*	*	*	*	*
703-48201-16	*	*	*	*	*	*	*	*	*
703-48201-A3	*	*	*	*	*	*	*	*	*
703-48202-15	*	*	*	*	*	*	*	*	*
703-48203-15	*	*	*	*	*	*	*	*	*
703-48203-A3	*	*	*	*	*	*	*	*	*
703-48205-17	*	*	*	*	*	*	*	*	*
703-48205-A5	*	*	*	*	*	*	*	*	*
703-48207-17	*	*	*	*	*	*	*	*	*
703-48207-A5	*	*	*	*	*	*	*	*	*
703-48208-A4	*	*	*	*	*	*	*	*	*

TO BE CONTINUED NEXT PAGE

* NOT EQUIPED
RC=REMOTE CONTROL

CHAPTER 1 REMOTE CONTROL EQUIPMENT

MODEL APPLICATION 4 CYCLE

MODEL / DEVICE NAME	FT9.9 (66R)	FT9.9 (6AV)	F13.5 (6AF)	F15 (66M)	F15 (6D4)	F15 (6AG)	F20 (65P)	F20 (6AH)	F20 (6AJ)
RC ATTACHMENT	66M-48501-00	6AU-48501-00	*	66M-48501-00	66M-48501-00	*	65W-48501-00	*	*
RC ATTACHMENT	*	*	*	*	*	*	*	*	*
RC ATTACHMENT	*	*	*	*	*	*	*	*	*
RC ATTACHMENT	*	*	*	*	*	*	*	*	*
STEERING GUIDE (SINGLE)	63V-61350-00	68T-61350-10	6AH-61350-00	63V-61350-00	63V-61350-00	6AH-61350-00	65W-61350-00	6AH-61350-00	6AH-61350-00
STEERING GUIDE (SINGLE)	*	*	*	*	*	*	*	*	*
STEERING GUIDE (TWIN)	*	*	*	*	*	*	*	*	*
STEERING GUIDE (TWIN)	*	*	*	*	*	*	*	*	*
701 TYPE RC BOX									
701-48101-23	*	*	*	*	*	*	*	*	*
701-48101-51	*	*	*	*	*	*	*	*	*
701-48101-G1	*	*	*	*	*	*	*	*	*
701-48102-23	*	*	*	*	*	*	*	*	*
701-48102-51	*	*	*	*	*	*	*	*	*
701-48102-G1	*	*	*	*	*	*	*	*	*
701-48130-23	*	*	*	*	*	*	*	*	*
701-48130-E0	*	*	*	*	*	*	*	*	*
701-48140-E0	*	*	*	*	*	*	*	*	*
703 TYPE RC BOX									
703-48204-13	*	*	*	*	*	*	*	*	*
703-48210-16	*	*	*	*	*	*	*	*	*
703-48220-15	*	*	*	*	*	*	*	*	*
703-48230-15	*	*	*	*	*	*	*	*	*
703-48250-17	*	*	*	*	*	*	*	*	*
703-48272-17	*	*	*	*	*	*	*	*	*
703-48201-16	*	*	*	*	*	*	*	*	*
703-48201-A3	*	*	*	*	*	*	*	*	*
703-48202-15	*	*	*	*	*	*	*	*	*
703-48203-15	*	*	*	*	*	*	*	*	*
703-48203-A3	*	*	*	*	*	*	*	*	*
703-48205-17	*	*	*	*	*	*	*	*	*
703-48205-A5	*	*	*	*	*	*	*	*	*
703-48207-17	*	*	*	*	*	*	*	*	*
703-48207-A5	*	*	*	*	*	*	*	*	*
703-48208-A4	*	*	*	*	*	*	*	*	*

TO BE CONTINUED NEXT PAGE

* NOT EQUIPED
RC=REMOTE CONTROL

CHAPTER 1 REMOTE CONTROL EQUIPMENT

MODEL APPLICATION 4 CYCLE

MODEL / DEVICE NAME	F25 (65W)	F25 (6D5)	FT25 (68U)	F30 (69H)	F40 (6AK)	F40 (67C)	F50 (60A)	F50 (6C1)	FT50 (61S)
RC ATTACHMENT	65W-48501-00	65W-48501-00	65W-48501-00	*	*	*	*	*	*
RC ATTACHMENT	*	*	*	*	*	*	*	*	*
RC ATTACHMENT	*	*	*	*	*	*	*	*	*
RC ATTACHMENT	*	*	*	*	*	*	*	*	*
STEERING GUIDE (SINGLE)	65W-61350-00	65W-61350-00	65W-61350-00	65W-61350-00	65W-61350-00	65W-61350-00	63D-61350-00	65W-61350-00	63D-61350-00
STEERING GUIDE (SINGLE)	*	*	*	*	*	*	*	*	*
STEERING GUIDE (TWIN)	*	*	*	6E5-61301-01	6E5-61301-01	6E5-61301-01	6E5-61301-01	6E5-61301-01	6E5-61301-01
STEERING GUIDE (TWIN)	*	*	*	*	*	*	*	*	*
701 TYPE RC BOX									
701-48101-23	*	*	*	*	*	*	*	*	*
701-48101-51	*	*	*	*	*	*	*	*	*
701-48101-G1	*	*	*	*	*	*	*	*	*
701-48102-23	*	*	*	*	*	*	*	*	*
701-48102-51	*	*	*	*	*	*	*	*	*
701-48102-G1	*	*	*	*	*	*	*	*	*
701-48130-23	*	*	*	*	*	*	*	*	*
701-48130-E0	*	*	*	*	*	*	*	*	*
701-48140-E0	*	*	*	*	*	*	*	*	*
703 TYPE RC BOX									
703-48204-13	*	*	*	*	*	*	*	*	*
703-48210-16	*	*	*	*	*	*	*	*	*
703-48220-15	*	*	*	*	*	*	*	*	*
703-48230-15	*	*	*	*	*	*	*	*	*
703-48250-17	*	*	*	*	*	*	*	*	*
703-48272-17	*	*	*	*	*	*	*	*	*
703-48201-16	*	*	*	*	*	*	*	*	*
703-48201-A3	*	*	*	*	*	*	*	*	*
703-48202-15	*	*	*	*	*	*	*	*	*
703-48203-15	*	*	*	*	*	*	*	*	*
703-48203-A3	*	*	*	*	*	*	*	*	*
703-48205-17	○	*	○	○	○	○	*	*	*
703-48205-A5	*	*	*	*	*	*	*	*	*
703-48207-17	○	*	○	○	○	○	*	*	*
703-48207-A5	*	*	*	*	*	*	*	*	*
703-48208-A4	*	*	*	*	*	*	*	*	*

TO BE CONTINUED NEXT PAGE

* NOT EQUIPED
RC=REMOTE CONTROL

CHAPTER 1 REMOTE CONTROL EQUIPMENT

MODEL APPLICATION **4 CYCLE**

MODEL / DEVICE NAME	FT50 (6C2)	F60 (6C5)	FT60 (6C6)	F75 (6D6)	F75 (6BC)	F80 (6D7)	F90 (6D8)	F95 (6S0)	F100 (60C)
RC ATTACHMENT	*	*	*	*	*	*	*	*	*
RC ATTACHMENT	*	*	*	*	*	*	*	*	*
RC ATTACHMENT	*	*	*	*	*	*	*	*	*
RC ATTACHMENT	*	*	*	*	*	*	*	*	*
STEERING GUIDE (SINGLE)	65W-61350-00	65W-61350-00	65W-61350-00	67F-61350-00	6E5-61350-02	67F-61350-00	67F-61350-00	6E5-61350-02	6E5-61350-02
STEERING GUIDE (SINGLE)	*	*	*	*	*	*	*	*	*
STEERING GUIDE (TWIN)	6E5-61301-01	6E5-61301-01	6E5-61301-01	6E5-61301-01	6E5-61301-01	6E5-61301-01	6E5-61301-01	6E5-61301-01	6E5-61301-01
STEERING GUIDE (TWIN)	*	*	*	*	*	*	*	*	*
701 TYPE RC BOX									
701-48101-23	*	*	*	*	*	*	*	*	*
701-48101-51	*	*	*	*	*	*	*	*	*
701-48101-G1	*	*	*	*	*	*	*	*	*
701-48102-23	*	*	*	*	*	*	*	*	*
701-48102-51	*	*	*	*	*	*	*	*	*
701-48102-G1	*	*	*	*	*	*	*	*	*
701-48130-23	*	*	*	*	*	*	*	*	*
701-48130-E0	*	*	*	*	*	*	*	*	*
701-48140-E0	*	*	*	*	*	*	*	*	*
703 TYPE RC BOX									
703-48204-13	*	*	*	*	*	*	*	*	*
703-48210-16	*	*	*	*	*	*	*	*	*
703-48220-15	*	*	*	*	*	*	*	*	*
703-48230-15	*	*	*	*	*	*	*	*	*
703-48250-17	*	*	*	*	*	*	*	*	*
703-48272-17	*	*	*	*	*	*	*	*	*
703-48201-16	*	*	*	*	*	*	*	*	*
703-48201-A3	*	*	*	*	*	*	*	*	*
703-48202-15	*	*	*	*	*	*	*	*	*
703-48203-15	*	*	*	*	*	*	*	*	*
703-48203-A3	*	*	*	*	*	*	*	*	*
703-48205-17	*	*	*	*	*	*	*	*	*
703-48205-A5	*	*	*	*	*	*	*	*	*
703-48207-17	*	*	*	*	*	*	*	*	*
703-48207-A5	*	*	*	*	*	*	*	*	*
703-48208-A4	*	*	*	*	*	*	*	*	*

TO BE CONTINUED NEXT PAGE

* NOT EQUIPED
RC=REMOTE CONTROL

CHAPTER 1 REMOTE CONTROL EQUIPMENT

MODEL APPLICATION **4 CYCLE**

MODEL / DEVICE NAME	F100 (6D9)	F115 (68V)	FL115 (68W)	F150 (63P)	FL150 (64P)	F200 (60L)	F200 (6S1)	F200 (6AL)	FL200 (60M)
RC ATTACHMENT	*	*	*	*	*	*	*	*	*
RC ATTACHMENT	*	*	*	*	*	*	*	*	*
RC ATTACHMENT	*	*	*	*	*	*	*	*	*
RC ATTACHMENT	*	*	*	*	*	*	*	*	*
STEERING GUIDE (SINGLE)	67F-61350-00	6E5-61350-02	6E5-61350-02	6E5-61350-02	6E5-61350-02	6E5-61350-02	6E5-61350-02	6E5-61350-02	6E5-61350-02
STEERING GUIDE (SINGLE)	*	*	*	*	*	*	*	*	*
STEERING GUIDE (TWIN)	6E5-61301-01	6E5-61301-01	6E5-61301-01	6E5-61301-01	6E5-61301-01	6E5-61301-01	6E5-61301-01	6E5-61301-01	6E5-61301-01
STEERING GUIDE (TWIN)	*	*	*	*	*	*	*	*	*
701 TYPE RC BOX									
701-48101-23	*	*	*	*	*	*	*	*	*
701-48101-51	*	*	*	*	*	*	*	*	*
701-48101-G1	*	*	*	*	*	*	*	*	*
701-48102-23	*	*	*	*	*	*	*	*	*
701-48102-51	*	*	*	*	*	*	*	*	*
701-48102-G1	*	*	*	*	*	*	*	*	*
701-48130-23	*	*	*	*	*	*	*	*	*
701-48130-E0	*	*	*	*	*	*	*	*	*
701-48140-E0	*	*	*	*	*	*	*	*	*
703 TYPE RC BOX									
703-48204-13	*	*	*	*	*	*	*	*	*
703-48210-16	*	*	*	*	*	*	*	*	*
703-48220-15	*	*	*	*	*	*	*	*	*
703-48230-15	*	*	*	*	*	*	*	*	*
703-48250-17	*	*	*	*	*	*	*	*	*
703-48272-17	*	*	*	*	*	*	*	*	*
703-48201-16	*	*	*	*	*	*	*	*	*
703-48201-A3	*	*	*	*	*	*	*	*	*
703-48202-15	*	*	*	*	*	*	*	*	*
703-48203-15	*	*	*	*	*	*	*	*	*
703-48203-A3	*	*	*	*	*	*	*	*	*
703-48205-17	*	○	*	○	*	○	*	*	*
703-48205-A5	*	*	*	*	*	*	*	*	*
703-48207-17	*	○	*	○	*	○	*	*	*
703-48207-A5	*	*	*	*	*	*	*	*	*
703-48208-A4	*	*	*	*	*	*	*	*	*

TO BE CONTINUED NEXT PAGE

* NOT EQUIPED
RC=REMOTE CONTROL

CHAPTER 1 REMOTE CONTROL EQUIPMENT

MODEL APPLICATION **4 CYCLE**

MODEL / DEVICE NAME	FL200 (6S2)	FL200 (6AM)	F225 (69J)	F225 (6AS)	F225 (6BB)	FL225 (69K)	FL225 (6AT)	F250 (6P2)	FL250 (6P3)
RC ATTACHMENT	*	*	*	*	*	*	*	*	*
RC ATTACHMENT	*	*	*	*	*	*	*	*	*
RC ATTACHMENT	*	*	*	*	*	*	*	*	*
RC ATTACHMENT	*	*	*	*	*	*	*	*	*
STEERING GUIDE (SINGLE)	6E5-61350-02	6E5-61350-02	6E5-61350-02	6E5-61350-02	6E5-61350-02	6E5-61350-02	6E5-61350-02	6E5-61350-02	6E5-61350-02
STEERING GUIDE (SINGLE)	*	*	*	*	*	*	*	*	*
STEERING GUIDE (TWIN)	6E5-61301-01	6E5-61301-01	6E5-61301-01	6E5-61301-01	6E5-61301-01	6E5-61301-01	6E5-61301-01	6E5-61301-01	6E5-61301-01
STEERING GUIDE (TWIN)	*	*	*	*	*	*	*	*	*
701 TYPE RC BOX									
701-48101-23	*	*	*	*	*	*	*	*	*
701-48101-51	*	*	*	*	*	*	*	*	*
701-48101-G1	*	*	*	*	*	*	*	*	*
701-48102-23	*	*	*	*	*	*	*	*	*
701-48102-51	*	*	*	*	*	*	*	*	*
701-48102-G1	*	*	*	*	*	*	*	*	*
701-48130-23	*	*	*	*	*	*	*	*	*
701-48130-E0	*	*	*	*	*	*	*	*	*
701-48140-E0	*	*	*	*	*	*	*	*	*
703 TYPE RC BOX									
703-48204-13	*	*	*	*	*	*	*	*	*
703-48210-16	*	*	*	*	*	*	*	*	*
703-48220-15	*	*	*	*	*	*	*	*	*
703-48230-15	*	*	*	*	*	*	*	*	*
703-48250-17	*	*	*	*	*	*	*	*	*
703-48272-17	*	*	*	*	*	*	*	*	*
703-48201-16	*	*	*	*	*	*	*	*	*
703-48201-A3	*	*	*	*	*	*	*	*	*
703-48202-15	*	*	*	*	*	*	*	*	*
703-48203-15	*	*	*	*	*	*	*	*	*
703-48203-A3	*	*	*	*	*	*	*	*	*
703-48205-17	*	*	○	*	*	*	*	*	*
703-48205-A5	*	*	*	*	*	*	*	*	*
703-48207-17	*	*	○	*	*	*	*	*	*
703-48207-A5	*	*	*	*	*	*	*	*	*
703-48208-A4	*	*	*	*	*	*	*	*	*

TO BE CONTINUED NEXT PAGE

* NOT EQUIPED
RC=REMOTE CONTROL

CHAPTER 1 REMOTE CONTROL EQUIPMENT

MODEL APPLICATION 4 CYCLE

MODEL / DEVICE NAME	F300 (6BJ)	FL300 (6BK)	F350 (6AW)	FL350 (6AX)
RC ATTACHMENT	*	*	*	*
RC ATTACHMENT	*	*	*	*
RC ATTACHMENT	*	*	*	*
RC ATTACHMENT	*	*	*	*
STEERING GUIDE (SINGLE)	*	*	*	*
STEERING GUIDE (SINGLE)	*	*	*	*
STEERING GUIDE (TWIN)	*	*	*	*
STEERING GUIDE (TWIN)	*	*	*	*
701 TYPE RC BOX				
701-48101-23	*	*	*	*
701-48101-51	*	*	*	*
701-48101-G1	*	*	*	*
701-48102-23	*	*	*	*
701-48102-51	*	*	*	*
701-48102-G1	*	*	*	*
701-48130-23	*	*	*	*
701-48130-E0	*	*	*	*
701-48140-E0	*	*	*	*
703 TYPE RC BOX				
703-48204-13	*	*	*	*
703-48210-16	*	*	*	*
703-48220-15	*	*	*	*
703-48230-15	*	*	*	*
703-48250-17	*	*	*	*
703-48272-17	*	*	*	*
703-48201-16	*	*	*	*
703-48201-A3	*	*	*	*
703-48202-15	*	*	*	*
703-48203-15	*	*	*	*
703-48203-A3	*	*	*	*
703-48205-17	*	*	*	*
703-48205-A5	*	*	*	*
703-48207-17	*	*	*	*
703-48207-A5	*	*	*	*
703-48208-A4	*	*	*	*

TO BE CONTINUED NEXT PAGE

* NOT EQUIPED
RC=REMOTE CONTROL

CHAPTER 1 REMOTE CONTROL EQUIPMENT

MODEL APPLICATION 4 CYCLE

MODEL / DEVICE NAME	F2 (6S7)	F2.5 (69M)	F4 (68D)	F6 (60N)	F8 (60R)	FT8 (60S)	F9.9 (66N)	F9.9 (6AU)	F9.9 (69B)
704 TYPE RC BOX									
704-48205-B1	*	*	*	*	*	*	*	*	*
704-48203-P1	*	*	*	*	*	*	*	*	*
704-48205-P1	*	*	*	*	*	*	*	*	*
704-48206-P1	*	*	*	*	*	*	*	*	*
704-48207-P1	*	*	*	*	*	*	*	*	*
RC BOX FOR DUAL STATION									
6X3-48206-01	*	*	*	*	*	*	*	*	*
6X5-48207-01	*	*	*	*	*	*	*	*	*
6X6 TYPE									
6X6-48205-00	*	*	*	*	*	*	*	*	*
6X6-48205-10	*	*	*	*	*	*	*	*	*
6X6-48205-20	*	*	*	*	*	*	*	*	*
6X6-48207-00	*	*	*	*	*	*	*	*	*
6X6-48207-10	*	*	*	*	*	*	*	*	*
6X6-48207-20	*	*	*	*	*	*	*	*	*
6X6-48208-20	*	*	*	*	*	*	*	*	*
6X6-48208-30	*	*	*	*	*	*	*	*	*

TO BE CONTINUED NEXT PAGE

* NOT EQUIPED
RC=REMOTE CONTROL

CHAPTER 1 REMOTE CONTROL EQUIPMENT

MODEL APPLICATION **4 CYCLE**

MODEL / DEVICE NAME	FT9.9 (66R)	FT9.9 (6AV)	F13.5 (6AF)	F15 (66M)	F15 (6D4)	F15 (6AG)	F20 (65P)	F20 (6AH)	F20 (6AJ)
704 TYPE RC BOX									
704-48205-B1	*	*	*	*	*	*	*	*	*
704-48203-P1	*	*	*	*	*	*	*	*	*
704-48205-P1	*	*	*	*	*	*	*	*	*
704-48206-P1	*	*	*	*	*	*	*	*	*
704-48207-P1	*	*	*	*	*	*	*	*	*
RC BOX FOR DUAL STATION									
6X3-48206-01	*	*	*	*	*	*	*	*	*
6X5-48207-01	*	*	*	*	*	*	*	*	*
6X6 TYPE									
6X6-48205-00	*	*	*	*	*	*	*	*	*
6X6-48205-10	*	*	*	*	*	*	*	*	*
6X6-48205-20	*	*	*	*	*	*	*	*	*
6X6-48207-00	*	*	*	*	*	*	*	*	*
6X6-48207-10	*	*	*	*	*	*	*	*	*
6X6-48207-20	*	*	*	*	*	*	*	*	*
6X6-48208-20	*	*	*	*	*	*	*	*	*
6X6-48208-30	*	*	*	*	*	*	*	*	*

TO BE CONTINUED NEXT PAGE

* NOT EQUIPED
RC=REMOTE CONTROL

CHAPTER 1 REMOTE CONTROL EQUIPMENT

MODEL APPLICATION 4 CYCLE

MODEL / DEVICE NAME	F25 (65W)	F25 (6D5)	FT25 (68U)	F30 (69H)	F40 (6AK)	F40 (67C)	F50 (60A)	F50 (6C1)	FT50 (61S)
704 TYPE RC BOX									
704-48205-B1	○	＊	○	○	○	○	＊	＊	＊
704-48203-P1	＊	＊	＊	＊	＊	＊	＊	＊	＊
704-48205-P1	○	＊	○	○	○	○	＊	＊	＊
704-48206-P1	＊	＊	＊	＊	＊	＊	＊	＊	＊
704-48207-P1	＊	＊	＊	＊	＊	＊	＊	＊	＊
RC BOX FOR DUAL STATION									
6X3-48206-01	○	＊	○	○	○	○	＊	＊	＊
6X5-48207-01	＊	＊	＊	＊	＊	＊	＊	＊	＊
6X6 TYPE									
6X6-48205-00	＊	＊	＊	＊	＊	＊	＊	＊	＊
6X6-48205-10	＊	＊	＊	＊	＊	＊	＊	＊	＊
6X6-48205-20	＊	＊	＊	＊	＊	＊	＊	＊	＊
6X6-48207-00	＊	＊	＊	＊	＊	＊	＊	＊	＊
6X6-48207-10	＊	＊	＊	＊	＊	＊	＊	＊	＊
6X6-48207-20	＊	＊	＊	＊	＊	＊	＊	＊	＊
6X6-48208-20	＊	＊	＊	＊	＊	＊	＊	＊	＊
6X6-48208-30	＊	＊	＊	＊	＊	＊	＊	＊	＊

TO BE CONTINUED NEXT PAGE

＊ NOT EQUIPED
RC=REMOTE CONTROL

CHAPTER 1 REMOTE CONTROL EQUIPMENT

MODEL APPLICATION 4 CYCLE

MODEL / DEVICE NAME	FT50 (6C2)	F60 (6C5)	FT60 (6C6)	F75 (6D6)	F75 (6BC)	F80 (6D7)	F90 (6D8)	F95 (6S0)	F100 (60C)
704 TYPE RC BOX									
704-48205-B1	*	*	*	*	*	*	*	*	*
704-48203-P1	*	*	*	*	*	*	*	*	*
704-48205-P1	*	*	*	*	*	*	*	*	*
704-48206-P1	*	*	*	*	*	*	*	*	*
704-48207-P1	*	*	*	*	*	*	*	*	*
RC BOX FOR DUAL STATION									
6X3-48206-01	*	*	*	*	*	*	*	*	*
6X5-48207-01	*	*	*	*	*	*	*	*	*
6X6 TYPE									
6X6-48205-00	*	*	*	*	*	*	*	*	*
6X6-48205-10	*	*	*	*	*	*	*	*	*
6X6-48205-20	*	*	*	*	*	*	*	*	*
6X6-48207-00	*	*	*	*	*	*	*	*	*
6X6-48207-10	*	*	*	*	*	*	*	*	*
6X6-48207-20	*	*	*	*	*	*	*	*	*
6X6-48208-20	*	*	*	*	*	*	*	*	*
6X6-48208-30	*	*	*	*	*	*	*	*	*

TO BE CONTINUED NEXT PAGE

* NOT EQUIPED
RC=REMOTE CONTROL

CHAPTER 1 REMOTE CONTROL EQUIPMENT

MODEL APPLICATION 4 CYCLE

MODEL / DEVICE NAME	F100 (6D9)	F115 (68V)	FL115 (68W)	F150 (63P)	FL150 (64P)	F200 (60L)	F200 (6S1)	F200 (6AL)	FL200 (60M)
704 TYPE RC BOX									
704-48205-B1	＊	○	＊	○	＊	○	＊	＊	＊
704-48203-P1	＊	＊	＊	＊	＊	＊	＊	＊	＊
704-48205-P1	＊	○	＊	○	＊	○	＊	＊	＊
704-48206-P1	＊	＊	＊	＊	＊	＊	＊	＊	＊
704-48207-P1	＊	○ (TWIN)	○	○ (TWIN)	○	○ (TWIN)	＊	＊	○
RC BOX FOR DUAL STATION									
6X3-48206-01	＊	○	＊	○	＊	○	＊	＊	＊
6X5-48207-01	＊	○	○	○	○	○	○	○	○
6X6 TYPE									
6X6-48205-00	＊	＊	＊	＊	＊	＊	＊	＊	＊
6X6-48205-10	＊	＊	＊	＊	＊	＊	＊	＊	＊
6X6-48205-20	＊	＊	＊	＊	＊	＊	＊	＊	＊
6X6-48207-00	＊	＊	＊	＊	＊	＊	＊	＊	＊
6X6-48207-10	＊	＊	＊	＊	＊	＊	＊	＊	＊
6X6-48207-20	＊	＊	＊	＊	＊	＊	＊	＊	＊
6X6-48208-20	＊	＊	＊	＊	＊	＊	＊	＊	＊
6X6-48208-30	＊	＊	＊	＊	＊	＊	＊	＊	＊

TO BE CONTINUED NEXT PAGE

＊ NOT EQUIPED
RC=REMOTE CONTROL

CHAPTER 1 REMOTE CONTROL EQUIPMENT

MODEL APPLICATION **4 CYCLE**

MODEL / DEVICE NAME	FL200 (6S2)	FL200 (6AM)	F225 (69J)	F225 (6AS)	F225 (6BB)	FL225 (69K)	FL225 (6AT)	F250 (6P2)	FL250 (6P3)
704 TYPE RC BOX									
704-48205-B1	＊	＊	○	＊	＊	＊	＊	＊	＊
704-48203-P1	＊	＊	＊	＊	＊	＊	＊	＊	＊
704-48205-P1	＊	＊	○	＊	＊	＊	＊	＊	＊
704-48206-P1	＊	＊	＊	＊	＊	＊	＊	＊	＊
704-48207-P1	＊	＊	○ (TWIN)	＊	＊	○	＊	＊	＊
RC BOX FOR DUAL STATION									
6X3-48206-01	＊	＊	○	＊	＊	＊	＊	＊	＊
6X5-48207-01	○	○	○	○	○	○	○	○	○
6X6 TYPE									
6X6-48205-00	＊	＊	＊	＊	＊	＊	＊	＊	＊
6X6-48205-10	＊	＊	＊	＊	＊	＊	＊	＊	＊
6X6-48205-20	＊	＊	＊	＊	＊	＊	＊	＊	＊
6X6-48207-00	＊	＊	＊	＊	＊	＊	＊	＊	＊
6X6-48207-10	＊	＊	＊	＊	＊	＊	＊	＊	＊
6X6-48207-20	＊	＊	＊	＊	＊	＊	＊	＊	＊
6X6-48208-20	＊	＊	＊	＊	＊	＊	＊	＊	＊
6X6-48208-30	＊	＊	＊	＊	＊	＊	＊	＊	＊

TO BE CONTINUED NEXT PAGE

＊ NOT EQUIPED
RC=REMOTE CONTROL

CHAPTER 1 REMOTE CONTROL EQUIPMENT

MODEL APPLICATION 4 CYCLE

MODEL / DEVICE NAME	F300 (6BJ)	FL300 (6BK)	F350 (6AW)	FL350 (6AX)
704 TYPE RC BOX				
704-48205-B1	＊	＊	＊	＊
704-48203-P1	＊	＊	＊	＊
704-48205-P1	＊	＊	＊	＊
704-48206-P1	＊	＊	＊	＊
704-48207-P1	＊	＊	＊	＊
RC BOX FOR DUAL STATION				
6X3-48206-01	＊	＊	＊	＊
6X5-48207-01	＊	＊	＊	＊
6X6 TYPE				
6X6-48205-00	○	○	○	○
6X6-48205-10	○	○	○	○
6X6-48205-20	○	○	○	○
6X6-48207-00	○	○	○	○
6X6-48207-10	○	○	○	○
6X6-48207-20	○	○	○	○
6X6-48208-20	○	○	○	○
6X6-48208-30	○	○	○	○

TO BE CONTINUED NEXT PAGE

＊ NOT EQUIPED
RC=REMOTE CONTROL

REMOTE CONTROL BOX SPECIFICATION LIST (701 TYPE)

TYPE : 701	MECHANICAL SPECIFICATION									
PART NO.	LIST UP SEC.	THROTTLE MOTION		HANDLE POSITION		NEUTRAL LOCK	TIGHTENING		LEVER TYPE	
	FIG.NO-REF.NO.	PULL	PUSH	RIGHT	LEFT		BOLT,NUT	ROUND WOOD SCREW	SINGLE	TWIN
701-48101-23	1-1	○	*	○	*	*	○	*	○	*
701-48101-51		○	*	○	*	*	*	○	○	*
701-48101-G1		○	*	○	*	○	○	*	○	*
701-48102-23		○	*	*	○	*	○	*	○	*
701-48102-51		○	*	*	○	*	○	*	○	*
701-48102-G1		○	*	*	○	○	○	*	○	*
701-48130-23		*	○	○	*	*	○	*	○	*
701-48130-E0		*	○	○	*	○	○	*	○	*
701-48140-E0		*	○	*	○	○	○	*	○	*

REMOTE CONTROL BOX SPECIFICATION LIST (701 TYPE)

TYPE : 701	ELECTRICAL SPECIFICATION								
PART NO.	ENGINE STOP SW.		MAIN SWITCH		PT/T SW.	WIRE HARNESS COUPLER TYPE	BUZZER		NEUTRAL SW.
	PULL PLATE	PUSH BUTTON	CHOKE MODEL	PRIME START MODEL			ANALOG	DIGITAL	
701-48101-23	701-82575-53	*	*	*	*	*	*	*	*
701-48101-51	*	*	*	*	*	*	*	*	*
701-48101-G1	*	*	*	*	*	*	*	*	*
701-48102-23	701-82575-53	*	*	*	*	*	*	*	*
701-48102-51	*	*	*	*	*	*	*	*	*
701-48102-G1	*	*	*	*	*	*	*	*	*
701-48130-23	701-82575-53	*	*	*	*	*	*	*	*
701-48130-E0	701-82575-53	*	*	*	*	*	*	*	*
701-48140-E0	701-82575-53	*	*	*	*	*	*	*	*

701 REMOTE CONTROL

Part No.	Throttle		Lanyard stop S/W	N-lock	Mount		Remarks
	Push	Pull			R	L	
701-48101-23		1	1		1		
701-48101-51		1			1		
701-48101-G1		1		1	1		
701-48102-23		1	1			1	
701-48102-51		1				1	
701-48102-G1		1		1		1	
701-48130-23	1		1		1		
701-48130-E0	1		1	1	1		
701-48140-E0	1		1	1		1	

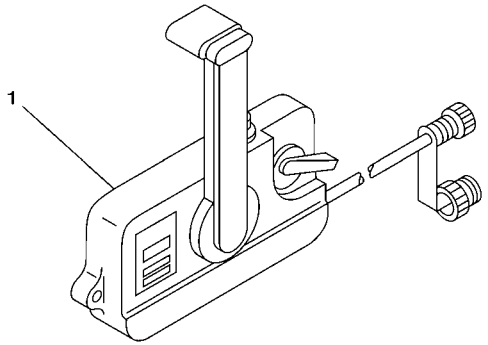

6011100-G010

FIG. 1 REMOTE CONTROL BOX 1 BOITIER DE COMMANDE A DISTANCE

REF. NO.	PART NO. N° PIECES	DESCRIPTION DESCRIPTION	2008					REMARKS REMARQUES
1	701–48101–23	REMOTE CONTROL ASSY (RIGHT) BOITIER DE COMMANDE A DISTANCE	1					UR UR
	701–48101–51	REMOTE CONTROL ASSY (RIGHT) BOITIER DE COMMANDE A DISTANCE	1					UR UR
	701–48101–G1	REMOTE CONTROL ASSY (RIGHT) BOITIER DE COMMANDE A DISTANCE	1					UR UR
	701–48102–23	REMOTE CONTROL ASSY (LEFT) BOITIER DE COMMANDE A DISTANCE	1					UR UR
	701–48102–51	REMOTE CONTROL ASSY (LEFT) BOITIER DE COMMANDE A DISTANCE	1					UR UR
	701–48102–G1	REMOTE CONTROL ASSY (LEFT) BOITIER DE COMMANDE A DISTANCE	1					UR UR
	701–48130–23	REMOTE CONTROL ASSY (RIGHT) BOITIER DE COMMANDE A DISTANCE	1					UR UR
	701–48130–E0	REMOTE CONTROL ASSY (RIGHT) BOITIER DE COMMANDE A DISTANCE	1					UR UR
	701–48140–E0	REMOTE CONTROL ASSY (LEFT) BOITIER DE COMMANDE A DISTANCE	1					UR UR

REMOTE CONTROL BOX SPECIFICATION LIST (703 TYPE)

TYPE : 703	MECHANICAL SPECIFICATION									
PART NO.	LIST UP SEC.	THROTTLE MOTION		HANDLE POSITION		NEUTRAL LOCK	TIGHTENING		LEVER TYPE	
	FIG.NO-REF.NO.	PULL	PUSH	RIGHT	LEFT		BOLT,NUT	ROUND WOOD SCREW	SINGLE	TWIN
703-48204-13	2-1	○	*	*	○	○	○	*	○	*
703-48210-16		○	*	○	*	○	○	*	○	*
703-48220-15		○	*	○	*	○	○	*	*	○
703-48230-15		○	*	○	*	○	○	*	○	*
703-48250-17		○	*	○	*	○	○	*	○	*
703-48272-17		○	*	○	*	○	○	*	○	*
703-48201-16		*	○	○	*	○	○	*	○	*
703-48201-A3		*	○	○	*	○	○	*	○	*
703-48202-15		*	○	○	*	○	○	*	*	○
703-48203-15		*	○	○	*	○	○	*	○	*
703-48203-A3		*	○	○	*	○	○	*	○	*
703-48205-17		*	○	○	*	○	○	*	○	*
703-48205-A5		*	○	○	*	○	○	*	○	*
703-48207-17		*	○	○	*	○	○	*	○	*
703-48207-A5		*	○	○	*	○	○	*	○	*
703-48208-A4		*	○	*	○	○	○	*	*	○

REMOTE CONTROL BOX SPECIFICATION LIST (703 TYPE)

TYPE : 703	ELECTRICAL SPECIFICATION								
PART NO.	ENGINE STOP SW.		MAIN SWITCH		PT/T SW.	WIRE HARNESS COUPLER TYPE	BUZZER		NEUTRAL SW.
	PULL PLATE	PUSH BUTTON	CHOKE MODEL	PRIME START MODEL			ANALOG	DIGITAL	
703-48204-13	688-82575-01	*	705-82510-33	*	*	7P	703-83383-02	*	703-82540-00
703-48210-16	688-82575-01	*	703-82510-43	*	*	10P	703-83383-02	*	703-82540-00
703-48220-15	688-82575-01	*	703-82510-33	*	*	7P	703-83383-02	*	703-82540-00
703-48230-15	688-82575-01	*	703-82510-33	*	*	7P	703-83383-02	*	703-82540-00
703-48250-17	688-82575-01	*	703-82510-43	*	703-82563-02	10P	703-83383-02	*	703-82540-00
703-48272-17	688-82575-01	*	703-82510-43	*	703-82563-12	10P	703-83383-02	*	703-82540-00
703-48201-16	688-82575-01	*	703-82510-43	*	*	10P	703-83383-02	*	703-82540-00
703-48201-A3	688-82575-01	*	*	703-82510-12	*	10P	*	703-83383-B0	703-82540-00
703-48202-15	688-82575-01	*	703-82510-33	*	*	7P	703-83383-02	*	703-82540-00
703-48203-15	688-82575-01	*	703-82510-33	*	*	7P	703-83383-02	*	703-82540-00
703-48203-A3	688-82575-01	*	*	703-82510-03	*	7P	*	703-83383-B0	703-82540-00
703-48205-17	688-82575-01	*	703-82510-43	*	703-82563-02	10P	703-83383-02	*	703-82540-00
703-48205-A5	688-82575-01	*	*	703-82510-12	703-82563-02	10P	*	703-83383-B0	703-82540-00
703-48207-17	688-82575-01	*	703-82510-43	*	703-82563-12	10P	703-83383-02	*	703-82540-00
703-48207-A5	688-82575-01	*	*	703-82510-12	703-82563-12	10P	*	703-83383-B0	703-82540-00
703-48208-A4	688-82575-01	*	*	703-82510-12	*	10P	*	703-83383-B0	703-82540-00

703 REMOTE CONTROL

Part No.	Throttle		Choke	PT/T	Wire-harness		Mount		Remarks
	Push	Pull			7pin	10pin	R	L	
703-48204-13		1	1		1			1	
703-48210-16		1	1			1	1		
703-48220-15		1	1		1		1		For Twin-application
703-48230-15		1	1		1		1		For analog gauge only
703-48250-17		1	1	1		1	1		
703-48272-17		1	1	1		1	1		For additional tilt switch
703-48201-16	1		1			1	1		
703-48201-A3	1					1	1		
703-48202-15	1		1		1		1		For Twin-application
703-48203-15	1		1		1		1		
703-48203-A3	1				1		1		For analog gauge only
703-48205-17	1		1	1		1	1		
703-48205-A5	1			1		1	1		
703-48207-17	1		1	1		1	1		
703-48207-A5	1			1		1	1		
703-48208-A4	1					1		1	For Twin-application

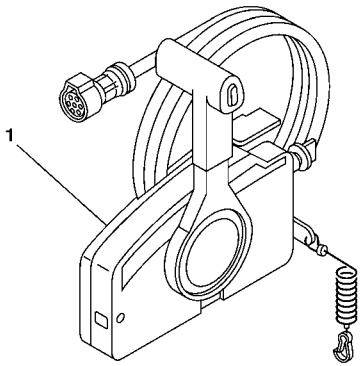

6011100-G020

FIG. 2 REMOTE CONTROL BOX 2 BOITIER DE COMMANDE A DISTANCE

REF. NO.	PART NO. N° PIECES	DESCRIPTION DESCRIPTION	2008					REMARKS REMARQUES
1	703–48204–13	REMOTE CONTROL ASSY (7P) BOITIER DE COMMANDE A DISTANCE	1					UR WITHOUT PT/T SW. UR WITHOUT PT/T SW.
	703–48210–16	REMOTE CONTROL ASSY (10P) BOITIER DE COMMANDE A DISTANCE	1					UR WITHOUT PT/T SW. UR WITHOUT PT/T SW.
	703–48220–15	REMOTE CONTROL ASSY (7P) BOITIER DE COMMANDE A DISTANCE	1					UR FOR TWIN UR FOR TWIN
	703–48230–15	REMOTE CONTROL ASSY (7P) BOITIER DE COMMANDE A DISTANCE	1					UR WITHOUT PT/T SW. UR WITHOUT PT/T SW.
	703–48250–17	REMOTE CONTROL ASSY (10P) BOITIER DE COMMANDE A DISTANCE	1					UR WITH PT/T SW. UR WITH PT/T SW.
	703–48272–17	REMOTE CONTROL ASSY (10P) BOITIER DE COMMANDE A DISTANCE	1					UR WITH PT/T SW. UR WITH PT/T SW.
	703–48201–16	REMOTE CONTROL ASSY (10P) BOITIER DE COMMANDE A DISTANCE	1					UR WITHOUT PT/T SW. UR WITHOUT PT/T SW.
	703–48201–A3	REMOTE CONTROL ASSY (10P) BOITIER DE COMMANDE A DISTANCE	1					UR WITHOUT PT/T SW. UR WITHOUT PT/T SW.
	703–48202–15	REMOTE CONTROL ASSY (7P) BOITIER DE COMMANDE A DISTANCE	1					UR FOR TWIN UR FOR TWIN
	703–48203–15	REMOTE CONTROL ASSY (7P) BOITIER DE COMMANDE A DISTANCE	1					UR WITHOUT PT/T SW. UR WITHOUT PT/T SW.
	703–48203–A3	REMOTE CONTROL ASSY (7P) BOITIER DE COMMANDE A DISTANCE	1					UR WITHOUT PT/T SW. UR WITHOUT PT/T SW.
	703–48205–17	REMOTE CONTROL ASSY (10P) BOITIER DE COMMANDE A DISTANCE	1					UR WITH PT/T SW. UR WITH PT/T SW.
	703–48205–A5	REMOTE CONTROL ASSY (10P) BOITIER DE COMMANDE A DISTANCE	1					UR WITH PT/T SW. UR WITH PT/T SW.
	703–48207–17	REMOTE CONTROL ASSY (10P) BOITIER DE COMMANDE A DISTANCE	1					UR WITH PT/T SW. UR WITH PT/T SW.
	703–48207–A5	REMOTE CONTROL ASSY (10P) BOITIER DE COMMANDE A DISTANCE	1					UR WITH PT/T SW. UR WITH PT/T SW.
	703–48208–A4	REMOTE CONTROL ASSY (10P) BOITIER DE COMMANDE A DISTANCE	1					UR FOR TWIN UR FOR TWIN

REMOTE CONTROL BOX SPECIFICATION LIST (704 TYPE)

TYPE : 704	MECHANICAL SPECIFICATION								
TYPE : 704 (SINGLE)	LIST UP SEC.	HANDLE POSITION		SHIFT MOTION		THROTTLE MOTION		LEVER TYPE	
PART NO.	FIG.NO.-REF.NO.	RIGHT	LEFT	PULL	PUSH	PULL	PUSH	SINGLE	TWIN
704-48205-B1	3-1	*	○	○	*	*	○	○	*
704-48203-P1	3-2	*	○	○	*	*	○	○	*
704-48205-P1		*	○	○	*	*	○	○	*
704-48206-P1		○	*	○	*	*	○	○	*
TYPE : 704 (TWIN)	LIST UP SEC.	HANDLE POSITION		SHIFT MOTION		THROTTLE MOTION		LEVER TYPE	
PART NO.	FIG.NO.-REF.NO.	RIGHT	LEFT	PULL	PUSH	PULL	PUSH	SINGLE	TWIN
704-48207-P1	3-3	*	*	○	*	*	○	*	○

REMOTE CONTROL BOX SPECIFICATION LIST (704 TYPE)

TYPE : 704	ELECTRICAL SPECIFICATION					
TYPE : 704 (SINGLE)	PT/T SW.			NEUTRAL SW.	CABLE TERMINAL	
PART NO.	BODY SW.	BODY SW.	GRIP SW.		MM	INCH
704-48205-B1	＊	＊	704-82563-41	704-82540-20	＊	○
704-48203-P1	＊	＊	*	704-82540-20	＊	○
704-48205-P1	＊	＊	704-82563-41	704-82540-20	＊	○
704-48206-P1	＊	＊	704-82563-41	704-82540-20	＊	○
TYPE : 704 (TWIN)	PT/T SW.			NEUTRAL SW.	CABLE TERMINAL	
PART NO.	BODY SW.	BODY SW.	GRIP SW.		MM	INCH
704-48207-P1	704-82563-H1	704-82563-J1	704-82563-51	704-82540-30	＊	○

704 REMOTE CONTROL

Part No.	Throttle		PTT	Lever			Remarks
	Push	Pull		R	L	Twin	
704-48205-B1	1		1		1		Standard
704-48203-P1	1				1		Premium
704-48205-P1	1		1		1		Premium
704-48206-P1	1		1	1			Premium
704-48207-P1	1		1			1	Premium

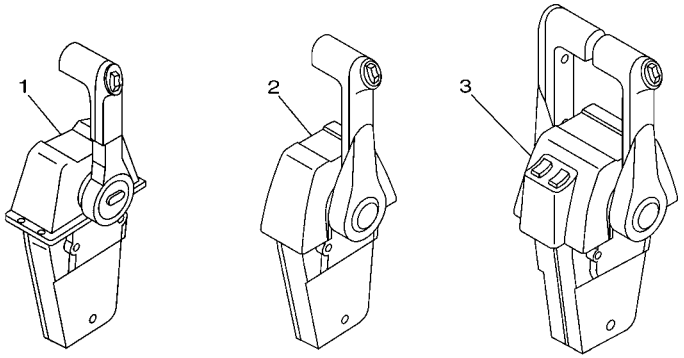

Standard single Premium single Premium twin

Part No.	Remarks
704-48293-00	For Single lever, Standard
704-48293-20	For Single lever, Premium
704-48293-30	For Twin lever, Premium

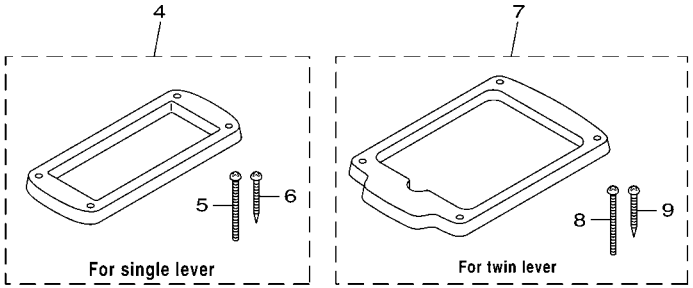

6011100-G030

FIG. 3 REMOTE CONTROL BOX 3 BOITIER DE COMMANDE A DISTANCE

REF. NO.	PART NO. N° PIECES	DESCRIPTION DESCRIPTION	2008					REMARKS REMARQUES
1	704–48205–B1	REMOTE CONTROL ASSY BOITIER DE COMMANDE A DISTANCE	1					WITH PT/T SW. WITH PT/T SW.
2	704–48203–P1	REMOTE CONTROL ASSY (RIGHT) BOITIER DE COMMANDE A DISTANCE	1					UR WITHOUT PT/T SW. UR WITHOUT PT/T SW.
	704–48205–P1	REMOTE CONTROL ASSY (RIGHT) BOITIER DE COMMANDE A DISTANCE	1					UR WITH PT/T SW. UR WITH PT/T SW.
	704–48206–P1	REMOTE CONTROL ASSY (LEFT) BOITIER DE COMMANDE A DISTANCE	1					UR WITH PT/T SW. UR WITH PT/T SW.
3	704–48207–P1	REMOTE CONTROL ASSY BOITIER DE COMMANDE A DISTANCE	1					WITH PT/T SW. WITH PT/T SW.
4	704–48293–00	SPACER, REMOTE CONTROL ENTRETOISE	1					UR FOR SINGLE UR FOR SINGLE
	704–48293–20	SPACER, REMOTE CONTROL ENTRETOISE	1					UR FOR SINGLE UR FOR SINGLE
5	98580–05060	.SCREW, PAN HEAD .VIS	4					
6	97780–50145	.SCREW, TAPPING .VIS, TETE BOMBEE	4					
7	704–48293–30	SPACER, REMOTE CONTROL ENTRETOISE	1					FOR TWIN FOR TWIN
8	98580–05060	.SCREW, PAN HEAD .VIS	4					
9	97780–50145	.SCREW, TAPPING .VIS, TETE BOMBEE	4					

REMOTE CONTROL BOX SPECIFICATION LIST (6X3/6X5 TYPE)

SIDE MOUNT	MECHANICAL SPECIFICATION									
TYPE : 6X3 (SINGLE)	LIST UP SEC.	HANDLE POSITION		SHIFT MOTION		THROTTLE MOTION		LEVER TYPE		
PART NO.	FIG.NO.-REF.NO.	RIGHT	LEFT	PULL	PUSH	PULL	PUSH	SINGLE	TWIN	TRIPLE
6X3-48206-01	4-1	○	*	○	*	*	○	○	*	*
TOP MOUNT	MECHANICAL SPECIFICATION									
TYPE : 6X5	LIST UP SEC.	HANDLE POSITION		SHIFT MOTION		THROTTLE MOTION		LEVER TYPE		
PART NO.	FIG.NO.-REF.NO.	RIGHT	LEFT	PULL	PUSH	PULL	PUSH	SINGLE	TWIN	TRIPLE
6X5-48207-01	4-2	○	*	*	○	○	*	*	*	○

REMOTE CONTROL BOX SPECIFICATION LIST (6X3/6X5 TYPE)

SIDE MOUNT	ELECTRICAL SPECIFICATION						
TYPE : 6X3 (SINGLE)	PT/T SW.				NEUTRAL SW.	CABLE TERMINAL	
PART NO.	BODY SW.	BODY SW.	BODY SW.	GRIP SW.		MM	INCH
6X3-48206-01	*	*	*	6X3-82563-01	704-82540-00	*	○

TOP MOUNT	ELECTRICAL SPECIFICATION						
TYPE : 6X5	PT/T SW.				NEUTRAL SW.	CABLE TERMINAL	
PART NO.	BODY SW.	BODY SW.	BODY SW.	GRIP SW.		MM	INCH
6X5-48207-01	6X5-82563-11	6X5-82563-21	6X5-82563-31	6X5-82563-01	6X5-82540-00	*	○

6X3 REMOTE CONTROL

Part No.	Throttle		PTT	Mount		Remarks
	Push	Pull		R	L	
6X3-48206-01	1		1	1		With stop switch lanyard

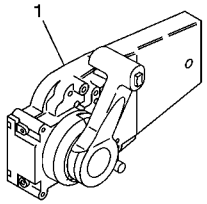

6X5 REMOTE CONTROL

Part No.	Throttle		PTT	Mount		Remarks
	Push	Pull		R	L	
6X5-48207-01	1		1	1		Triple

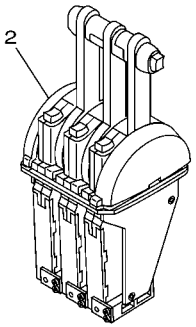

6011100-G040

FIG. 4 REMOTE CONTROL BOX 4 BOITIER DE COMMANDE A DISTANCE

REF. NO.	PART NO. N° PIECES	DESCRIPTION DESCRIPTION	2008					REMARKS REMARQUES
1	6X3–48206–01	REMOTE CONTROL ASSY MONO LEVIER GAUCHE AVEC TRIM	1					WITH PT/T SW. WITH PT/T SW.
2	6X5–48207–01	REMOTE CONTROL ASSY BOITIER DE COMMANDE A DISTANCE	1					WITH PT/T SW. WITH PT/T SW.

701 REMOTE CONTROL (PULL TO OPEN TYPE)

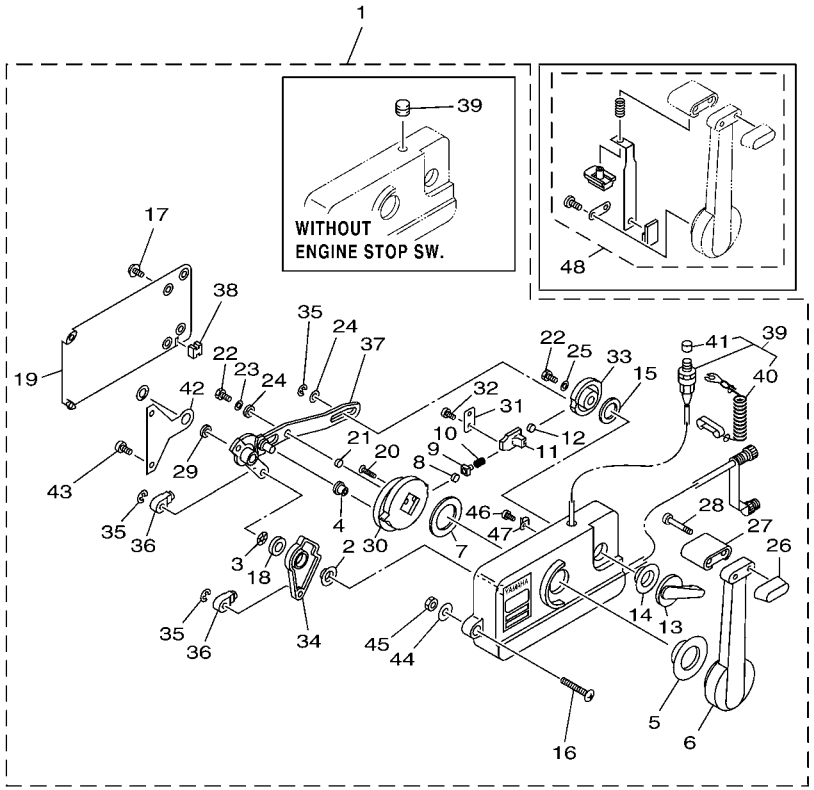

*1 : FOR 701-48101-23/ 701-48102-23
*2 : FOR 701-48101-51/ 701-48101-G1/ 701-48102-51/ 701-48102-G1
*3 : FOR 701-48101-G1/ 701-48102-G1

6011100-G050

FIG. 5 REMOTE CONTROL ASSY 1 BOITIER DE COMMANDE A DISTANCE

REF. NO.	PART NO. N° PIECES	DESCRIPTION DESCRIPTION	2008					REMARKS REMARQUES
1	701–48101–23	REMOTE CONTROL ASSY (RIGHT) BOITIER DE COMMANDE A DISTANCE	1					UR UR
	701–48101–51	REMOTE CONTROL ASSY (RIGHT) BOITIER DE COMMANDE A DISTANCE	1					UR UR
	701–48101–G1	REMOTE CONTROL ASSY (RIGHT) BOITIER DE COMMANDE A DISTANCE	1					UR UR
	701–48102–23	REMOTE CONTROL ASSY (LEFT) BOITIER DE COMMANDE A DISTANCE	1					UR UR
	701–48102–51	REMOTE CONTROL ASSY (LEFT) BOITIER DE COMMANDE A DISTANCE	1					UR UR
	701–48102–G1	REMOTE CONTROL ASSY (LEFT) BOITIER DE COMMANDE A DISTANCE	1					UR UR
2	701–48235–00	.BUSHING .COUSSINET	1					
3	701–48197–10	.WASHER, WAVE .RONDELLE, ELASTIQUE ONDULEE	1					
4	701–48252–00	.ROLLER, CAM .POULIE	1					
5	701–48234–00	.BUSHING 1 .POULIE	1					
6	701–48221–00	.LEVER, CONTROL .LEVIER, COMMANDE	1					
7	701–48196–11	.WASHER, WAVE .RONDELLE, ELASTIQUE ONDULEE	1					
8	701–48236–00	.ROLLER, DETENT .POULIE	1					
9	702–48237–00	.ADAPTOR .ADAPTEUR	1					
10	702–48238–00	.SPRING, DETENT .RESSORT	1					
11	701–48249–00	.ADAPTOR, SPRING .ADAPTEUR	1					
12	701–48248–00	.ROLLER, FREE ACCEL. .POULIE	1					
13	701–48152–11	.KNOB, FREE ACCEL. .BOUTON	1					FOR RIGHT FOR RIGHT
	701–48152–20	.KNOB, FREE ACCEL. .BOUTON	1					FOR LEFT FOR LEFT
14	701–48243–00	.BUSHING .COUSSINET	1					
15	701–48198–10	.WASHER, WAVE .RONDELLE, ELASTIQUE ONDULEE	1					
16	701–48281–10	.SCREW .VIS	3					
17	701–48289–00	.SCREW .VIS	4					
18	701–48268–00	.SPACER .ENTRETOISE	1					
19	701–48213–00	.BACK PLATE 2 .PLAQUETTE 2	1					
20	92780–06025	.SCREW, FLAT HEAD .VIS A TETE FRAISEE	2					
21	701–48255–00	.COLLAR .ENTRETOISE	1					

FIG. 5 REMOTE CONTROL ASSY 1 BOITIER DE COMMANDE A DISTANCE

701 REMOTE CONTROL (PULL TO OPEN TYPE)

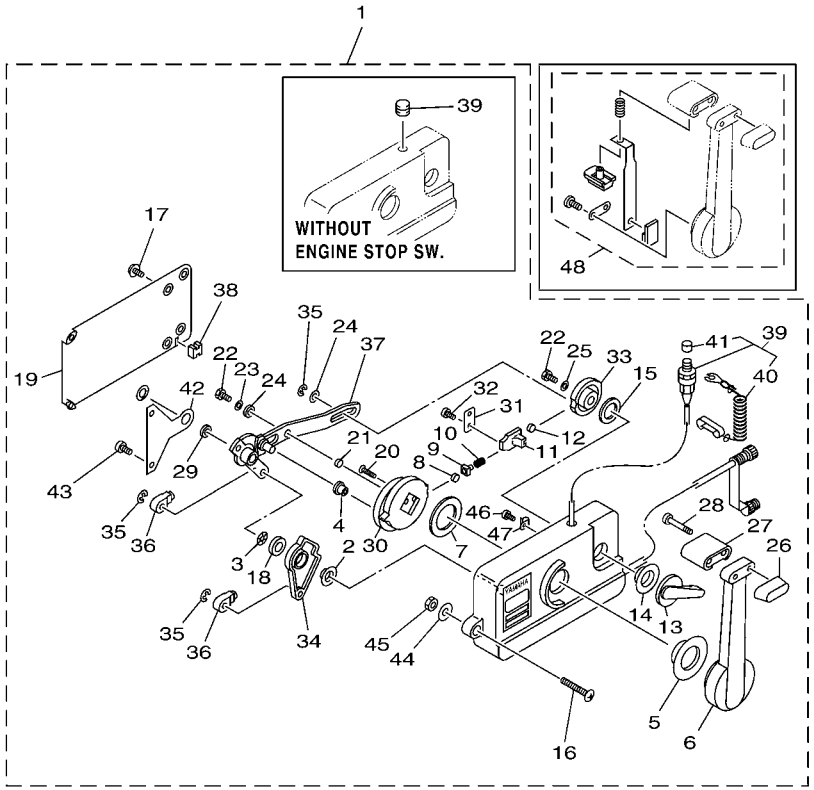

*1 : FOR 701-48101-23/ 701-48102-23
*2 : FOR 701-48101-51/ 701-48101-G1/ 701-48102-51/ 701-48102-G1
*3 : FOR 701-48101-G1/ 701-48102-G1

6011100-G050

REF. NO.	PART NO. N° PIECES	DESCRIPTION DESCRIPTION	2008					REMARKS REMARQUES
22	97390–06018	.BOLT .BOLT (624)	2					
23	702–48288–00	.WASHER, PLAIN .RONDELLE, PLATE	1					
24	701–48246–00	.SPACER .ENTRETOISE	2					
25	92990–06300	.WASHER, INTERNAL TOOTH .RONDELLE, DENTURE INTERNE	1					
26	701–48229–00	.GRIP, CONTROL LEVER .POIGNEE, COMMANDE LEVIER	1					
27	701–48222–00	.GRIP, CONTROL LEVER .POIGNEE, COMMANDE LEVIER	1					
28	701–48282–00	.SCREW .VIS	2					
29	701–48266–00	.SPACER .ENTRETOISE	1					
30	701–48232–00	.GEAR .PIGNON	1					
31	701–48189–11	.RETAINER .FLASQUE	1					
32	98580–05010	.SCREW, PAN HEAD .VIS	2					
33	701–48153–12	.SHAFT, FREE ACCEL. .AXE	1					
34	701–48271–00	.ARM, SHIFT .BRAS	1					FOR RIGHT FOR RIGHT
	701–48271–10	.ARM, SHIFT .BRAS	1					FOR LEFT FOR LEFT
35	93430–06024	.CIRCLIP .CLIPS	3					
36	703–48345–01	.CABLE END, REMOTE CONTROL 2 .CHAPE CABLE	2					
37	701–48261–00	.ARM, THROTTLE .BRAS, ACCELERATION	1					FOR RIGHT FOR RIGHT
	701–48261–10	.ARM, THROTTLE .BRAS, ACCELERATION	1					FOR LEFT FOR LEFT
38	701–48358–00	.ANCHOR, CABLE .COLLIER	1					
39	701–82575–53	.ENGINE STOP SWITCH ASSY .COUPE CIRCUIT CPLT	1					*1 *1
	701–48138–50	.CAP, LOCK ARM .AMORTISSEUR	1					*2 *2
40	682–82556–00	..LANYARD, STOP SWITCH ..PLAQUETTE	1					FOR 701-82575-53 FOR 701-82575-53
41	689–8257Y–00	..CAP ..CHAPEAU	1					FOR 701-82575-53 FOR 701-82575-53
42	701–48133–00	.PLATE, LINK .PLAQUE, BIELLETTE	1					
43	98580–05020	.SCREW, PAN HEAD .VIS	2					
44	701–48287–00	.WASHER .RONDELLE	3					
45	95380–06600	.NUT, HEXAGON .ECROU	3					

701 REMOTE CONTROL (PULL TO OPEN TYPE)

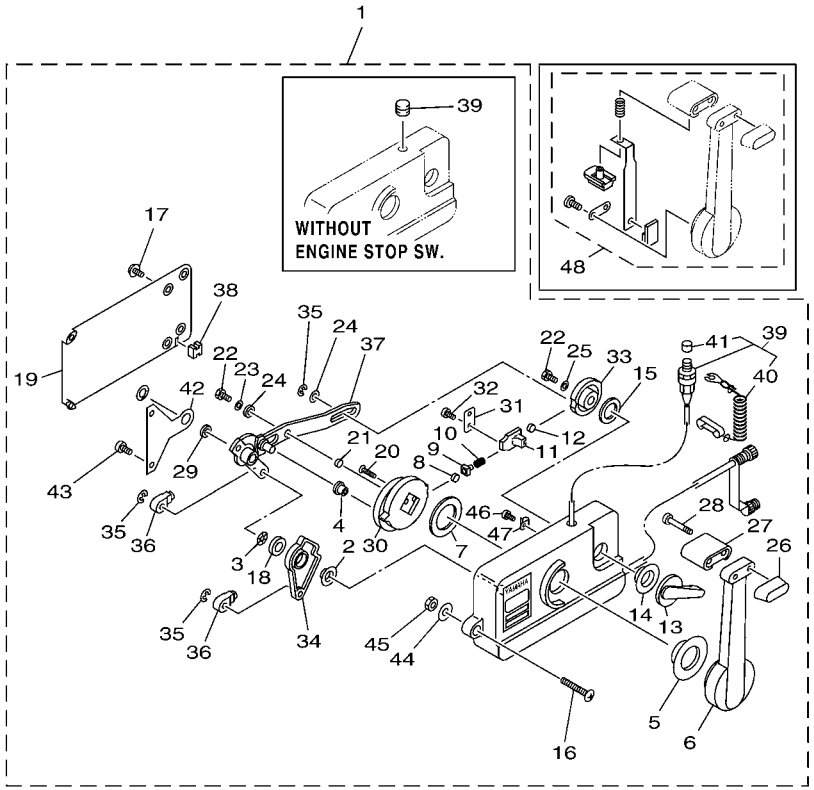

*1 : FOR 701-48101-23/ 701-48102-23
*2 : FOR 701-48101-51/ 701-48101-G1/ 701-48102-51/ 701-48102-G1
*3 : FOR 701-48101-G1/ 701-48102-G1

6011100-G050

FIG. 5 REMOTE CONTROL ASSY 1 BOITIER DE COMMANDE A DISTANCE

REF. NO.	PART NO. N° PIECES	DESCRIPTION DESCRIPTION	2008					REMARKS REMARQUES
46	701–48283–00	.SCREW .VIS	1					*1 *1
47	701–82594–00	.CLAMP .BRIDE	1					*1 *1
48	701–48280–00	NEUTRAL LOCK KIT KIT DE VERROU NEUTRAL	1					*3 *3

701 REMOTE CONTROL (PUSH TO OPEN TYPE)

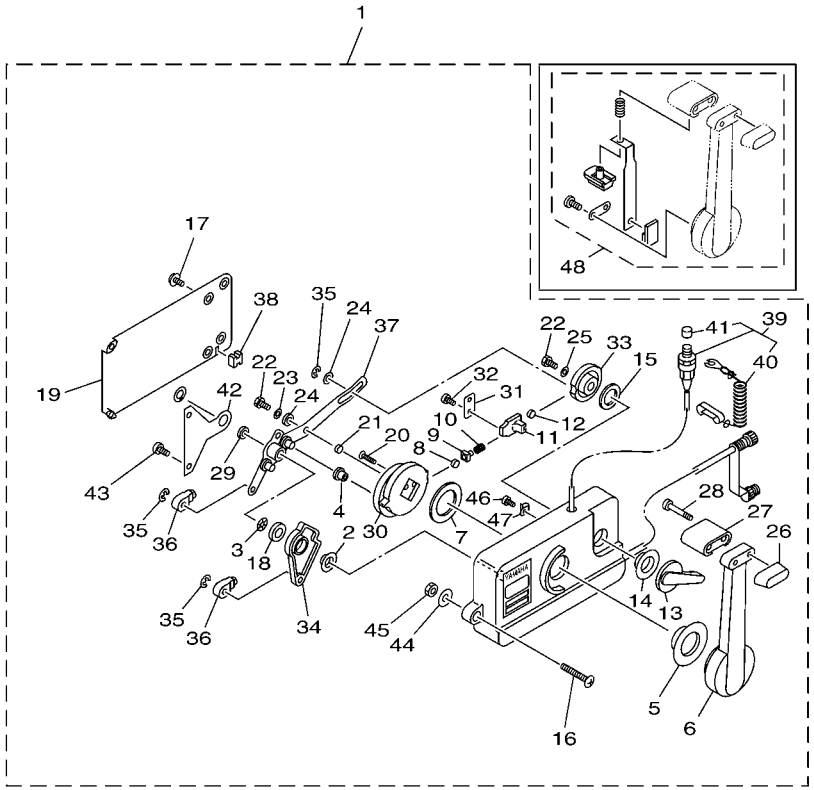

*1 : FOR 701-48130-E0/ 701-18140-E0

6011100-G060

FIG. 6 REMOTE CONTROL ASSY 2 BOITIER DE COMMANDE A DISTANCE

REF. NO.	PART NO. N° PIECES	DESCRIPTION DESCRIPTION	2008					REMARKS REMARQUES
1	701–48130–23	REMOTE CONTROL ASSY (RIGHT) BOITIER DE COMMANDE A DISTANCE	1					UR UR
	701–48130–E0	REMOTE CONTROL ASSY (RIGHT) BOITIER DE COMMANDE A DISTANCE	1					UR UR
	701–48140–E0	REMOTE CONTROL ASSY (LEFT) BOITIER DE COMMANDE A DISTANCE	1					UR UR
2	701–48235–00	.BUSHING .COUSSINET	1					
3	701–48197–10	.WASHER, WAVE .RONDELLE, ELASTIQUE ONDULEE	1					
4	701–48252–00	.ROLLER, CAM .POULIE	1					
5	701–48234–00	.BUSHING 1 .POULIE	1					
6	701–48221–00	.LEVER, CONTROL .LEVIER, COMMANDE	1					
7	701–48196–11	.WASHER, WAVE .RONDELLE, ELASTIQUE ONDULEE	1					
8	701–48236–00	.ROLLER, DETENT .POULIE	1					
9	702–48237–00	.ADAPTOR .ADAPTEUR	1					
10	702–48238–00	.SPRING, DETENT .RESSORT	1					
11	701–48249–00	.ADAPTOR, SPRING .ADAPTEUR	1					
12	701–48248–00	.ROLLER, FREE ACCEL. .POULIE	1					
13	701–48152–11	.KNOB, FREE ACCEL. .BOUTON	1					FOR RIGHT FOR RIGHT
	701–48152–20	.KNOB, FREE ACCEL. .BOUTON	1					FOR LEFT FOR LEFT
14	701–48243–00	.BUSHING .COUSSINET	1					
15	701–48198–10	.WASHER, WAVE .RONDELLE, ELASTIQUE ONDULEE	1					
16	701–48281–10	.SCREW .VIS	3					
17	701–48289–00	.SCREW .VIS	4					
18	701–48268–00	.SPACER .ENTRETOISE	1					
19	701–48213–00	.BACK PLATE 2 .PLAQUETTE 2	1					
20	92780–06025	.SCREW, FLAT HEAD .VIS A TETE FRAISEE	2					
21	701–48255–00	.COLLAR .ENTRETOISE	1					
22	97390–06018	.BOLT .BOLT (624)	2					
23	702–48288–00	.WASHER, PLAIN .RONDELLE, PLATE	1					
24	701–48246–00	.SPACER .ENTRETOISE	2					

701 REMOTE CONTROL (PUSH TO OPEN TYPE)

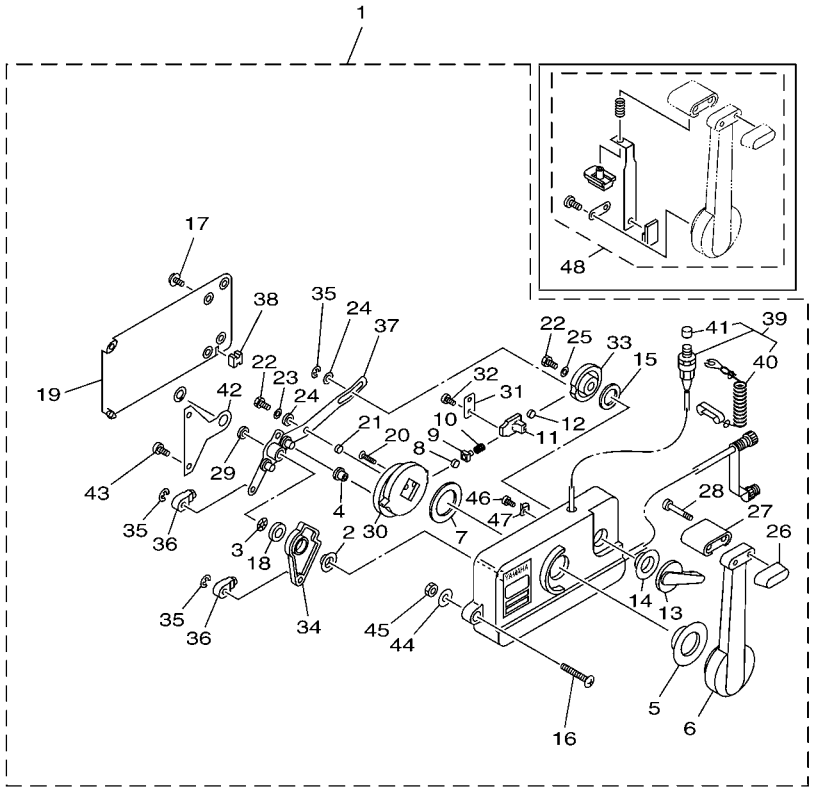

*1 : FOR 701-48130-E0/ 701-18140-E0

6011100-G060

FIG. 6 REMOTE CONTROL ASSY 2 BOITIER DE COMMANDE A DISTANCE

REF. NO.	PART NO. N° PIECES	DESCRIPTION DESCRIPTION	2008					REMARKS REMARQUES
25	92990–06300	.WASHER, INTERNAL TOOTH .RONDELLE, DENTURE INTERNE	1					
26	701–48229–00	.GRIP, CONTROL LEVER .POIGNEE, COMMANDE LEVIER	1					
27	701–48222–00	.GRIP, CONTROL LEVER .POIGNEE, COMMANDE LEVIER	1					
28	701–48282–00	.SCREW .VIS	2					
29	701–48266–00	.SPACER .ENTRETOISE	1					
30	701–48232–00	.GEAR .PIGNON	1					
31	701–48189–11	.RETAINER .FLASQUE	1					
32	98580–05010	.SCREW, PAN HEAD .VIS	2					
33	701–48153–12	.SHAFT, FREE ACCEL. .AXE	1					
34	701–48271–00	.ARM, SHIFT .BRAS	1					FOR RIGHT FOR RIGHT
	701–48271–10	.ARM, SHIFT .BRAS	1					FOR LEFT FOR LEFT
35	93430–06024	.CIRCLIP .CLIPS	3					
36	703–48345–01	.CABLE END, REMOTE CONTROL 2 .CHAPE CABLE	2					
37	701–48261–20	.ARM, THROTTLE .BRAS, ACCELERATION	1					
38	701–48358–00	.ANCHOR, CABLE .COLLIER	1					
39	701–82575–53	.ENGINE STOP SWITCH ASSY .COUPE CIRCUIT CPLT	1					
40	682–82556–00	..LANYARD, STOP SWITCH ..PLAQUETTE	1					
41	689–8257Y–00	..CAP ..CHAPEAU	1					
42	701–48133–00	.PLATE, LINK .PLAQUE, BIELLETTE	1					
43	98580–05020	.SCREW, PAN HEAD .VIS	2					
44	701–48287–00	.WASHER .RONDELLE	3					
45	95380–06600	.NUT, HEXAGON .ECROU	3					
46	701–48283–00	.SCREW .VIS	1					
47	701–82594–00	.CLAMP .BRIDE	1					
48	701–48280–00	NEUTRAL LOCK KIT KIT DE VERROU NEUTRAL	1					*1 *1

703 REMOTE CONTROL (PULL TO OPEN TYPE)

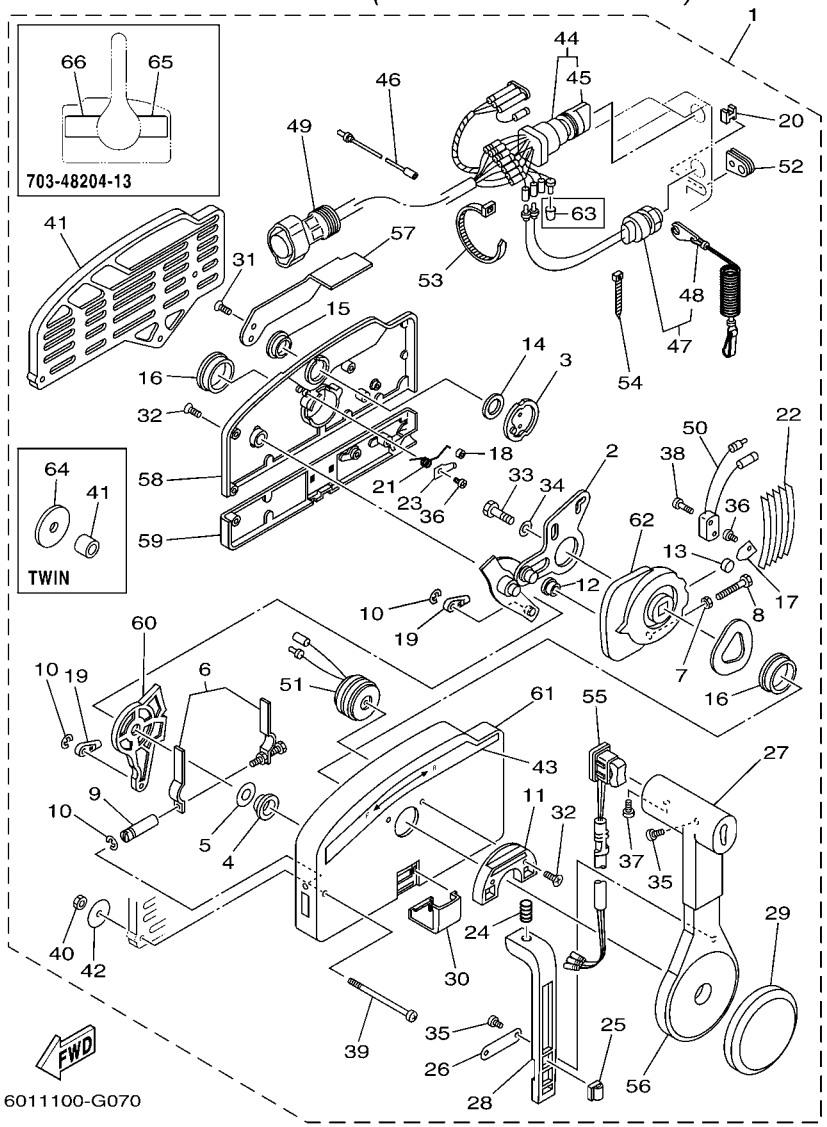

FIG. 7 REMOTE CONTROL ASSY 3 BOITIER DE COMMANDE A DISTANCE

REF. NO.	PART NO. N° PIECES	DESCRIPTION DESCRIPTION	2008					REMARKS REMARQUES
1	703–48204–13	REMOTE CONTROL ASSY (7P) BOITIER DE COMMANDE A DISTANCE	1					UR WITHOUT PT/T SW. UR WITHOUT PT/T SW.
	703–48210–16	REMOTE CONTROL ASSY (10P) BOITIER DE COMMANDE A DISTANCE	1					UR WITHOUT PT/T SW. UR WITHOUT PT/T SW.
	703–48220–15	REMOTE CONTROL ASSY (7P) BOITIER DE COMMANDE A DISTANCE	1					UR FOR TWIN UR FOR TWIN
	703–48230–15	REMOTE CONTROL ASSY (7P) BOITIER DE COMMANDE A DISTANCE	1					UR WITHOUT PT/T SW. UR WITHOUT PT/T SW.
	703–48250–17	REMOTE CONTROL ASSY (10P) BOITIER DE COMMANDE A DISTANCE	1					UR WITH PT/T SW. UR WITH PT/T SW.
	703–48272–17	REMOTE CONTROL ASSY (10P) BOITIER DE COMMANDE A DISTANCE	1					UR WITH PT/T SW. UR WITH PT/T SW.
2	703–48261–11	.ARM, THROTTLE .BRAS, ACCELERATION	1					
3	703–48153–00	.SHAFT, FREE ACCEL. .AXE	1					
4	703–48235–00	.BUSHING .COUSSINET	1					
5	703–48268–00	.SPACER .ENTRETOISE	1					
6	703–48264–00	.FRICTION, THROTTLE .FRICTION, ACCELERATION	1					
7	95380–05600	.NUT .ECROU	1					
8	97380–05025	.BOLT .BOULON, HEXAGONAL	1					
9	703–48265–00	.SHAFT, FRICTION .AXE, COPILOTE	1					
10	93430–06024	.CIRCLIP .CLIPS	3					
11	703–48245–00	.PLATE, LOCK .PLAQUE, VERROU	1					
12	703–48252–00	.ROLLER, CAM .POULIE	1					
13	701–48248–00	.ROLLER, FREE ACCEL. .POULIE	1					
14	703–48198–00	.WASHER, WAVE .RONDELLE, ELASTIQUE ONDULEE	1					
15	703–48243–00	.BUSHING .COUSSINET	1					
16	703–48236–00	.BUSHING 1 .POULIE	2					
17	703–48189–00	.RETAINER .FLASQUE	1					
18	703–48234–00	.ROLLER, DETENT .POULIE	1					
19	703–48345–01	.CABLE END, REMOTE CONTROL 2 .CHAPE CABLE	2					
20	703–48358–00	.ANCHOR, CABLE .COLLIER	1					
21	703–48244–00	.SPRING, FREE ACCEL. .RESSORT	1					
22	703–48238–00	.SPRING, DETENT .RESSORT	5					

FIG. 7 REMOTE CONTROL ASSY 3 BOITIER DE COMMANDE A DISTANCE

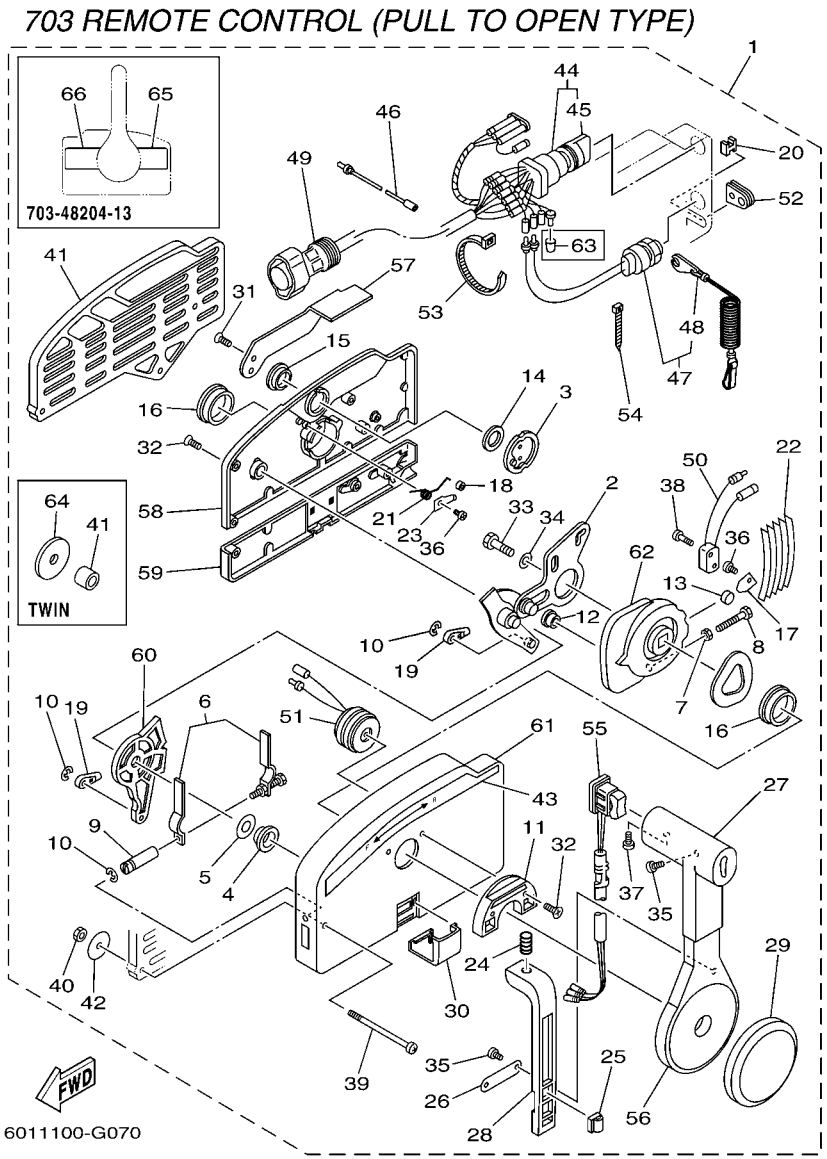

REF. NO.	PART NO. N° PIECES	DESCRIPTION DESCRIPTION	2008					REMARKS REMARQUES
23	703–48246–00	.SPACER .ENTRETOISE	1					
24	703–48227–00	.SPRING, NEUTRAL LOCK .RESSORT	1					
25	703–82594–00	.CLAMP .BRIDE	1					WITH PT/T SW. WITH PT/T SW.
26	703–48226–00	.PLATE, STOPPER .PLAQUETTE	1					
27	703–48222–00	.GRIP, CONTROL LEVER .POIGNEE, COMMANDE LEVIER	1					FOR SINGLE FOR SINGLE
	703–48222–10	.GRIP, CONTROL LEVER .POIGNEE, COMMANDE LEVIER	1					FOR TWIN FOR TWIN
28	703–48223–00	.LOCK, NEUTRAL .VERROU, NEUTRAL	1					
29	703–48225–00	.COVER .COUVERCLE	1					
30	703–48219–00	.COVER, LEAD .COUVERCLE	1					
31	703–48281–00	.SCREW .VIS	2					
32	703–48282–00	.SCREW .VIS	7					
33	97380–08030	.BOLT .BOULON, HEXAGONAL	1					
34	92990–08600	.WASHER, PLATE .RONDELLE, PLATE	1					
35	98580–04010	.SCREW, PAN HEAD .VIS	3					FOR SINGLE FOR SINGLE
	98580–04010	.SCREW, PAN HEAD .VIS	2					FOR TWIN FOR TWIN
36	98580–04006	.SCREW, PAN HEAD .VIS	2					
37	98580–05010	.SCREW, PAN HEAD .VIS	1					
38	98580–03015	.SCREW, PAN HEAD .VIS	2					
39	703–48291–10	.SCREW (M6) .VIS (M6)	3					
40	95380–06600	.NUT, HEXAGON .ECROU	3					
41	703–48293–10	.SPACER, REMOTE CONTROL .ENTRETOISE	1					FOR SINGLE FOR SINGLE
	703–48293–00	.SPACER, REMOTE CONTROL .ENTRETOISE	3					FOR TWIN FOR TWIN
42	701–48287–00	.WASHER .RONDELLE	3					
43	703–48215–00	.GRAPHIC .ADHESIF	1					EXCEPT 703-48204-13 EXCEPT 703-48204-13
44	703–82510–33	.MAIN SWITCH ASSY .CONTACTEUR A CLEF COMPLET	1					(7P) (7P)
	703–82510–43	.MAIN SWITCH ASSY .CONTACTEUR A CLEF COMPLET	1					(10P) (10P)
45	703–82577–00	..CAP, KEY ..CABOCHON	1					

FIG. 7 REMOTE CONTROL ASSY 3 BOITIER DE COMMANDE A DISTANCE

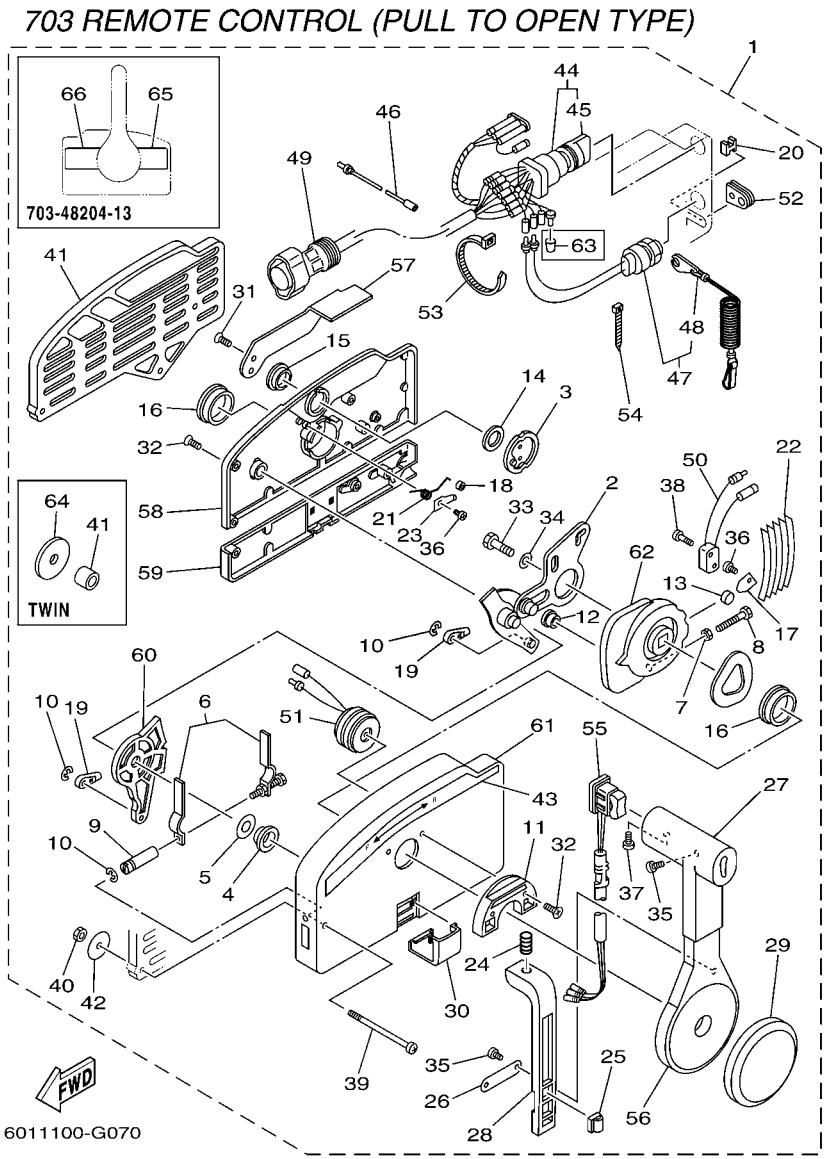

REF. NO.	PART NO. N° PIECES	DESCRIPTION DESCRIPTION	2008					REMARKS REMARQUES
46	703–82531–00	.WIRE, LEAD (L70) .FIL (L70)	1					
47	688–82575–01	.ENGINE STOP SWITCH ASSY .COUPE CIRCUIT CPLT	1					
48	682–82556–00	..LANYARD, STOP SWITCH ..PLAQUETTE	1					
49	688–82586–21	.EXTENSION, WIRE HARNESS (4.9M) .EXTENSION, FAISCEAU DE FILS (4	1					(7P) (7P)
	688–8258A–20	.EXTENSION, WIRE HARNESS (4.9M) .EXTENSION, FAISCEAU DE FILS (4	1					(10P) (10P)
50	703–82540–00	.NEUTRAL SWITCH ASSY .CONTACTEUR DE POINT-MORT	1					
51	703–83383–02	.BUZZER .RONFLEUR	1					
52	703–48284–00	.GROMMET .PASSE-FIL	1					
	703–48284–10	.GROMMET .PASSE-FIL	1					FOR 703-48272-17 FOR 703-48272-17
53	703–82591–00	.BAND .COLLIER	1					
	703–82591–00	.BAND .COLLIER	3					FOR 703-48272-17 FOR 703-48272-17
54	703–82592–00	.BAND .COLLIER	1					
55	703–48224–00	.COVER, CONTROL LEVER .COUVERCLE	1					WITHOUT PT/T SW. WITHOUT PT/T SW.
	703–82563–02	.TRIM & TILT SWITCH ASSY .INCLINER ET PARER COMMUTATEUR	1					FOR 703-48250-17 FOR 703-48250-17
	703–82563–12	.TRIM & TILT SWITCH ASSY .INCLINER ET PARER COMMUTATEUR	1					FOR 703-48272-17 FOR 703-48272-17
56	703–48221–00	.LEVER, CONTROL .LEVIER, COMMANDE	1					
57	703–48152–00	.KNOB, FREE ACCEL. .BOUTON	1					
58	703–48212–00	.BACK PLATE 1 .PLAQUETTE 1	1					
59	703–48213–00	.BACK PLATE 2 .PLAQUETTE 2	1					
60	703–48271–00	.ARM, SHIFT .BRAS	1					
61	703–48211–01	.HOUSING,1 .CORPS	1					
62	703–48232–00	.GEAR .PIGNON	1					
63	703–82542–00	.CAP .COUVERCLE	2					FOR 703-48210-16 FOR 703-48210-16
64	702–48287–00	.WASHER .RONDELLE	3					FOR TWIN FOR TWIN
65	703–48216–00	.GRAPHIC .ADHESIF 2 GAUCHE	1					FOR 703-48204-13 FOR 703-48204-13
66	703–48216–10	.GRAPHIC .ADHESIF 2 GAUCHE	1					FOR 703-48204-13 FOR 703-48204-13

703 REMOTE CONTROL (PUSH TO OPEN TYPE)

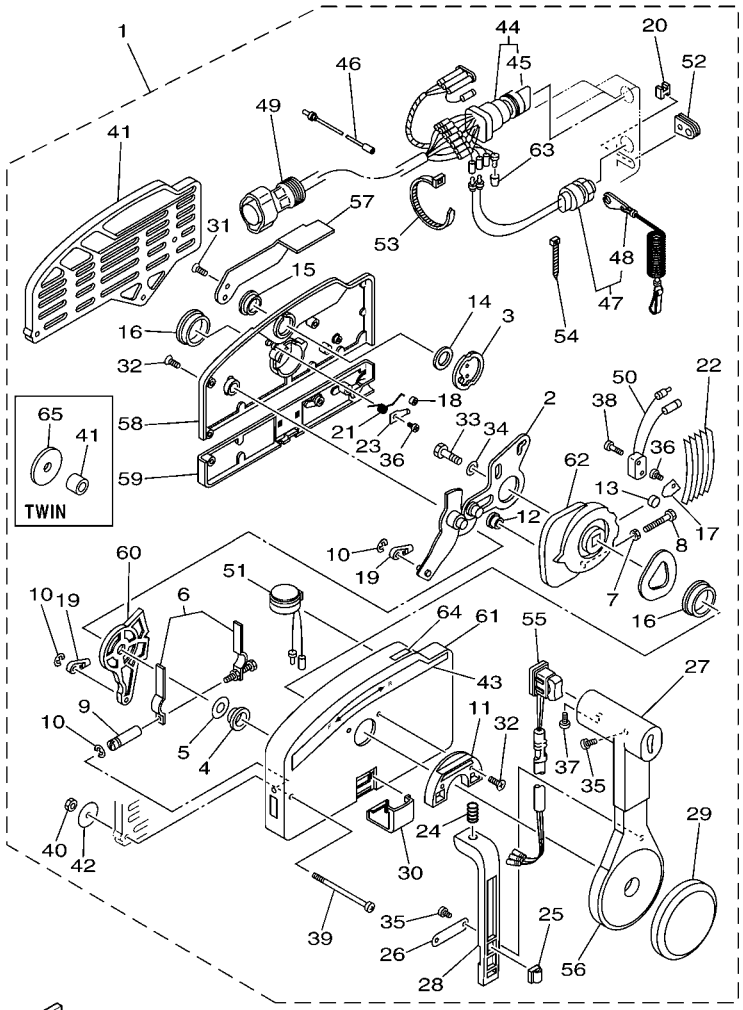

6011100-G080

*1: FOR 703-48201-16/ 703-48205-17/ 703-48207-17
*2: FOR 703-48201-A3/ 703-48205-A5/ 703-48207-A5/ 703-48208-A4
*3: FOR 703-48202-15/ 703-48203-15
*4: FOR 703-48201-16/ 703-48202-15/ 703-48203-15/ 703-48205-17/ 703-48207-17
*5: FOR 703-48201-A3/ 703-48203-A3/ 703-48205-A5/ 703-48207-A5/ 703-48208-A4
*6: FOR 703-48201-A3/ 703-48208-A4
*7: FOR 703-48203-A3/ 703-48205-A5/ 703-48207-A5

FIG. 8 REMOTE CONTROL ASSY 4 BOITIER DE COMMANDE A DISTANCE

REF. NO.	PART NO. N° PIECES	DESCRIPTION DESCRIPTION	2008					REMARKS REMARQUES
1	703–48201–16	REMOTE CONTROL ASSY (10P) BOITIER DE COMMANDE A DISTANCE	1					UR WITHOUT PT/T SW. UR WITHOUT PT/T SW.
	703–48201–A3	REMOTE CONTROL ASSY (10P) BOITIER DE COMMANDE A DISTANCE	1					UR WITHOUT PT/T SW. UR WITHOUT PT/T SW.
	703–48202–15	REMOTE CONTROL ASSY (7P) BOITIER DE COMMANDE A DISTANCE	1					UR FOR TWIN UR FOR TWIN
	703–48203–15	REMOTE CONTROL ASSY (7P) BOITIER DE COMMANDE A DISTANCE	1					UR WITHOUT PT/T SW. UR WITHOUT PT/T SW.
	703–48203–A3	REMOTE CONTROL ASSY (7P) BOITIER DE COMMANDE A DISTANCE	1					UR WITHOUT PT/T SW. UR WITHOUT PT/T SW.
	703–48205–17	REMOTE CONTROL ASSY (10P) BOITIER DE COMMANDE A DISTANCE	1					UR WITH PT/T SW. UR WITH PT/T SW.
	703–48205–A5	REMOTE CONTROL ASSY (10P) BOITIER DE COMMANDE A DISTANCE	1					UR WITH PT/T SW. UR WITH PT/T SW.
	703–48207–17	REMOTE CONTROL ASSY (10P) BOITIER DE COMMANDE A DISTANCE	1					UR WITH PT/T SW. UR WITH PT/T SW.
	703–48207–A5	REMOTE CONTROL ASSY (10P) BOITIER DE COMMANDE A DISTANCE	1					UR WITH PT/T SW. UR WITH PT/T SW.
	703–48208–A4	REMOTE CONTROL ASSY (10P) BOITIER DE COMMANDE A DISTANCE	1					UR FOR TWIN UR FOR TWIN
2	703–48261–01	.ARM, THROTTLE .BRAS, ACCELERATION	1					
3	703–48153–00	.SHAFT, FREE ACCEL. .AXE	1					
4	703–48235–00	.BUSHING .COUSSINET	1					
5	703–48268–00	.SPACER .ENTRETOISE	1					
6	703–48264–00	.FRICTION, THROTTLE .FRICTION, ACCELERATION	1					
7	95380–05600	.NUT .ECROU	1					
8	97380–05025	.BOLT .BOULON, HEXAGONAL	1					
9	703–48265–00	.SHAFT, FRICTION .AXE, COPILOTE	1					
10	93430–06024	.CIRCLIP .CLIPS	3					
11	703–48245–00	.PLATE, LOCK .PLAQUE, VERROU	1					
12	703–48252–00	.ROLLER, CAM .POULIE	1					
13	701–48248–00	.ROLLER, FREE ACCEL. .POULIE	1					
14	703–48198–00	.WASHER, WAVE .RONDELLE, ELASTIQUE ONDULEE	1					
15	703–48243–00	.BUSHING .COUSSINET	1					
16	703–48236–00	.BUSHING 1 .POULIE	2					
17	703–48189–00	.RETAINER .FLASQUE	1					
18	703–48234–00	.ROLLER, DETENT .POULIE	1					

703 REMOTE CONTROL (PUSH TO OPEN TYPE)

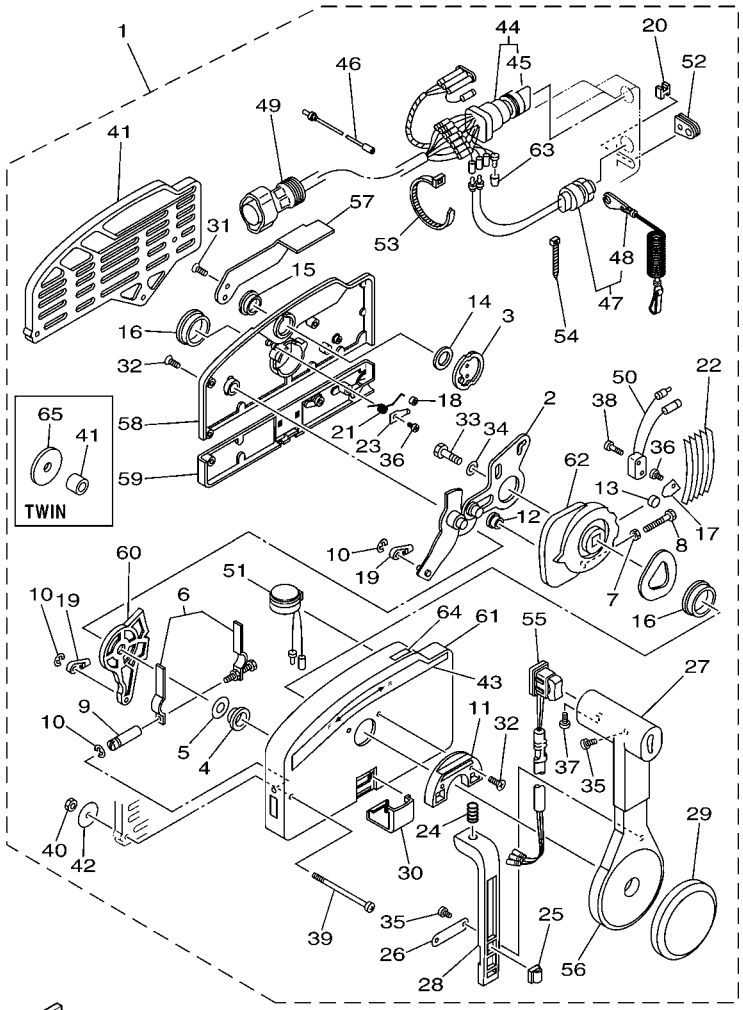

6011100-G080

*1: FOR 703-48201-16/ 703-48205-17/ 703-48207-17
*2: FOR 703-48201-A3/ 703-48205-A5/ 703-48207-A5/ 703-48208-A4
*3: FOR 703-48202-15/ 703-48203-15
*4: FOR 703-48201-16/ 703-48202-15/ 703-48203-15/ 703-48205-17/ 703-48207-17
*5: FOR 703-48201-A3/ 703-48203-A3/ 703-48205-A5/ 703-48207-A5/ 703-48208-A4
*6: FOR 703-48201-A3/ 703-48208-A4
*7: FOR 703-48203-A3/ 703-48205-A5/ 703-48207-A5

FIG. 8 REMOTE CONTROL ASSY 4 BOITIER DE COMMANDE A DISTANCE

REF. NO.	PART NO. N° PIECES	DESCRIPTION DESCRIPTION	2008					REMARKS REMARQUES
19	703–48345–01	.CABLE END, REMOTE CONTROL 2 .CHAPE CABLE	2					
20	703–48358–00	.ANCHOR, CABLE .COLLIER	1					
21	703–48244–00	.SPRING, FREE ACCEL. .RESSORT	1					
22	703–48238–00	.SPRING, DETENT .RESSORT	5					
23	703–48246–00	.SPACER .ENTRETOISE	1					
24	703–48227–00	.SPRING, NEUTRAL LOCK .RESSORT	1					
25	703–82594–00	.CLAMP .BRIDE	1					WITH PT/T SW. WITH PT/T SW.
26	703–48226–00	.PLATE, STOPPER .PLAQUETTE	1					
27	703–48222–00	.GRIP, CONTROL LEVER .POIGNEE, COMMANDE LEVIER	1					FOR SINGLE FOR SINGLE
	703–48222–10	.GRIP, CONTROL LEVER .POIGNEE, COMMANDE LEVIER	1					FOR TWIN FOR TWIN
28	703–48223–00	.LOCK, NEUTRAL .VERROU, NEUTRAL	1					
29	703–48225–00	.COVER .COUVERCLE	1					
30	703–48219–00	.COVER, LEAD .COUVERCLE	1					
31	703–48281–00	.SCREW .VIS	2					
32	703–48282–00	.SCREW .VIS	7					
33	97380–08030	.BOLT .BOULON, HEXAGONAL	1					
34	92990–08600	.WASHER, PLATE .RONDELLE, PLATE	1					
35	98580–04010	.SCREW, PAN HEAD .VIS	3					FOR SINGLE FOR SINGLE
	98580–04010	.SCREW, PAN HEAD .VIS	2					FOR TWIN FOR TWIN
36	98580–04006	.SCREW, PAN HEAD .VIS	2					
37	98580–05010	.SCREW, PAN HEAD .VIS	1					
38	98580–03015	.SCREW, PAN HEAD .VIS	2					
39	703–48291–10	.SCREW (M6) .VIS (M6)	3					
40	95380–06600	.NUT, HEXAGON .ECROU	3					
41	703–48293–10	.SPACER, REMOTE CONTROL .ENTRETOISE	1					FOR SINGLE FOR SINGLE
	703–48293–00	.SPACER, REMOTE CONTROL .ENTRETOISE	3					FOR TWIN FOR TWIN
42	701–48287–00	.WASHER .RONDELLE	3					

703 REMOTE CONTROL (PUSH TO OPEN TYPE)

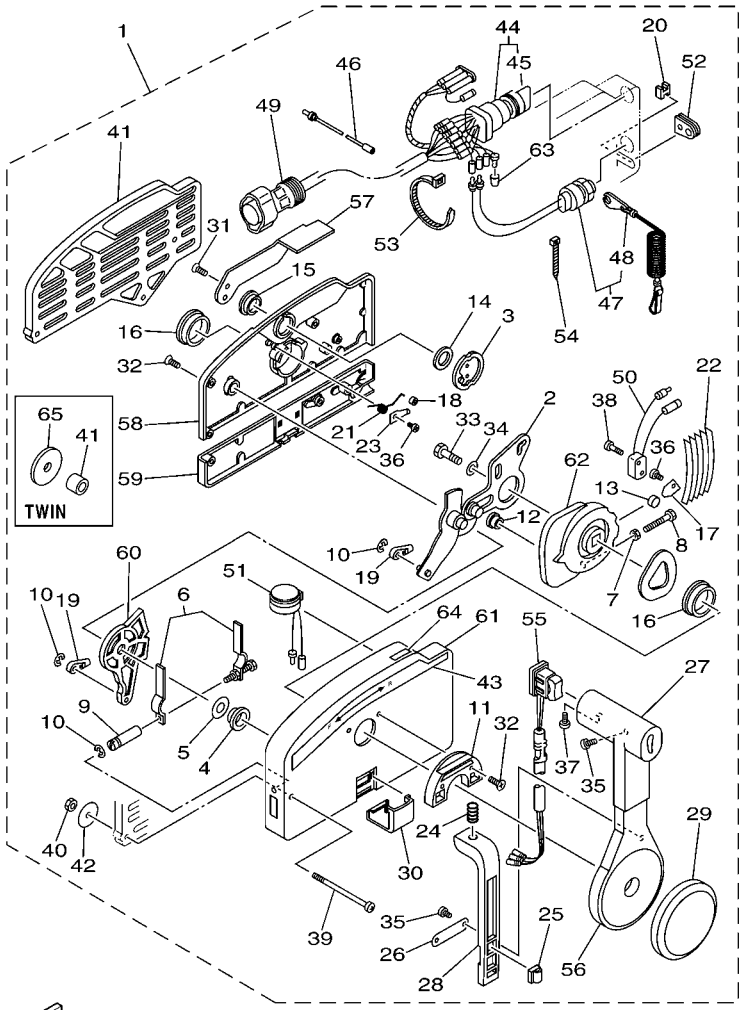

6011100-G080

*1: FOR 703-48201-16/ 703-48205-17/ 703-48207-17
*2: FOR 703-48201-A3/ 703-48205-A5/ 703-48207-A5/ 703-48208-A4
*3: FOR 703-48202-15/ 703-48203-15
*4: FOR 703-48201-16/ 703-48202-15/ 703-48203-15/ 703-48205-17/ 703-48207-17
*5: FOR 703-48201-A3/ 703-48203-A3/ 703-48205-A5/ 703-48207-A5/ 703-48208-A4
*6: FOR 703-48201-A3/ 703-48208-A4
*7: FOR 703-48203-A3/ 703-48205-A5/ 703-48207-A5

FIG. 8 REMOTE CONTROL ASSY 4 BOITIER DE COMMANDE A DISTANCE

REF. NO.	PART NO. N° PIECES	DESCRIPTION DESCRIPTION	2008					REMARKS REMARQUES
43	703–48215–00	.GRAPHIC .ADHESIF	1					
44	703–82510–43	.MAIN SWITCH ASSY .CONTACTEUR A CLEF COMPLET	1					*1 *1
	703–82510–12	.MAIN SWITCH ASSY .CONTACTEUR A CLEF COMPLET	1					*2 *2
	703–82510–33	.MAIN SWITCH ASSY .CONTACTEUR A CLEF COMPLET	1					*3 *3
	703–82510–03	.MAIN SWITCH ASSY .CONTACTEUR A CLEF COMPLET	1					FOR 703-48203-A3 FOR 703-48203-A3
45	703–82577–00	..CAP, KEY ..CABOCHON	1					FOR 703-82510-33/43 FOR 703-82510-33/43
	676–82577–00	..CAP, KEY ..CABOCHON	1					FOR 703-82510-03/12 FOR 703-82510-03/12
46	703–82531–00	.WIRE, LEAD (L70) .FIL (L70)	1					
47	688–82575–01	.ENGINE STOP SWITCH ASSY .COUPE CIRCUIT CPLT	1					
48	682–82556–00	..LANYARD, STOP SWITCH ..PLAQUETTE	1					
49	688–8258A–20	.EXTENSION, WIRE HARNESS (4.9M) .EXTENSION, FAISCEAU DE FILS (4	1					(10P) (10P)
	688–82586–21	.EXTENSION, WIRE HARNESS (4.9M) .EXTENSION, FAISCEAU DE FILS (4	1					(7P) (7P)
50	703–82540–00	.NEUTRAL SWITCH ASSY .CONTACTEUR DE POINT-MORT	1					
51	703–83383–02	.BUZZER .RONFLEUR	1					*4 *4
	703–83383–B0	.BUZZER .RONFLEUR	1					*5 *5
52	703–48284–00	.GROMMET .PASSE-FIL	1					
	703–48284–10	.GROMMET .PASSE-FIL	1					FOR 703-48207-17/A5 FOR 703-48207-17/A5
53	703–82591–00	.BAND .COLLIER	1					
	703–82591–00	.BAND .COLLIER	3					FOR 703-48207-17/A5 FOR 703-48207-17/A5
54	703–82592–00	.BAND .COLLIER	1					
55	703–48224–00	.COVER, CONTROL LEVER .COUVERCLE	1					WITHOUT PT/T SW. WITHOUT PT/T SW.
	703–82563–02	.TRIM & TILT SWITCH ASSY .INCLINER ET PARER COMMUTATEUR	1					FOR 703-48205-17/A5 FOR 703-48205-17/A5
	703–82563–12	.TRIM & TILT SWITCH ASSY .INCLINER ET PARER COMMUTATEUR	1					FOR 703-48207-17/A5 FOR 703-48207-17/A5
56	703–48221–00	.LEVER, CONTROL .LEVIER, COMMANDE	1					
57	703–48152–00	.KNOB, FREE ACCEL. .BOUTON	1					
58	703–48212–00	.BACK PLATE 1 .PLAQUETTE 1	1					
59	703–48213–00	.BACK PLATE 2 .PLAQUETTE 2	1					

703 REMOTE CONTROL (PUSH TO OPEN TYPE)

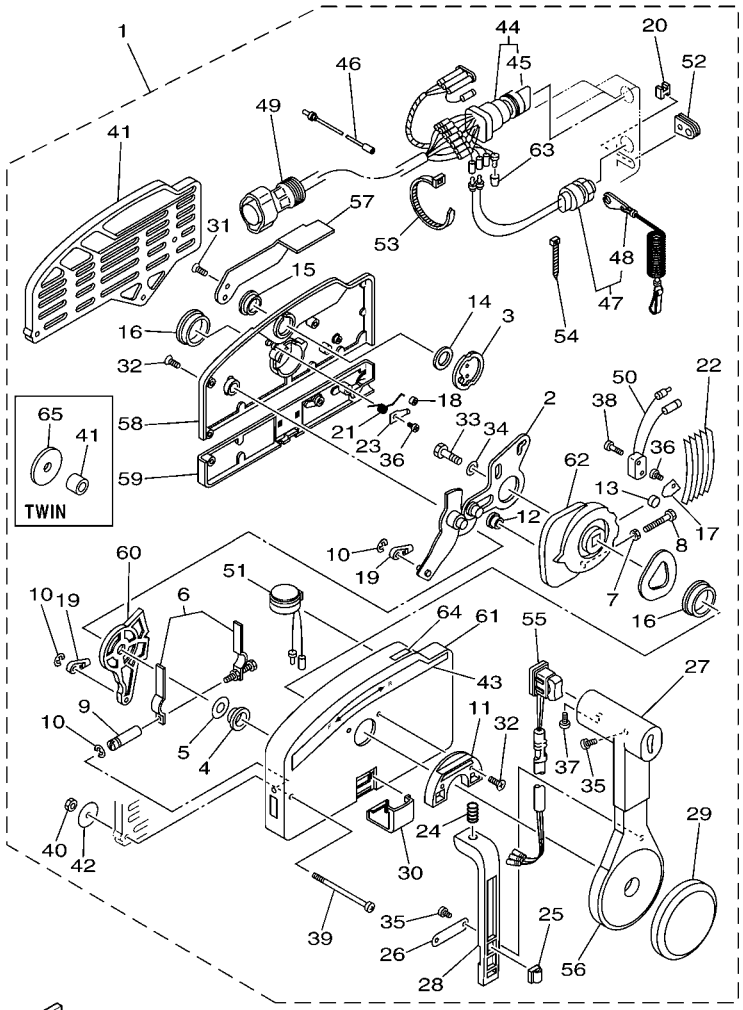

6011100-G080

*1: FOR 703-48201-16/ 703-48205-17/ 703-48207-17
*2: FOR 703-48201-A3/ 703-48205-A5/ 703-48207-A5/ 703-48208-A4
*3: FOR 703-48202-15/ 703-48203-15
*4: FOR 703-48201-16/ 703-48202-15/ 703-48203-15/ 703-48205-17/ 703-48207-17
*5: FOR 703-48201-A3/ 703-48203-A3/ 703-48205-A5/ 703-48207-A5/ 703-48208-A4
*6: FOR 703-48201-A3/ 703-48208-A4
*7: FOR 703-48203-A3/ 703-48205-A5/ 703-48207-A5

FIG. 8 REMOTE CONTROL ASSY 4 BOITIER DE COMMANDE A DISTANCE

REF. NO.	PART NO. N° PIECES	DESCRIPTION DESCRIPTION	2008					REMARKS REMARQUES
60	703–48271–00	.ARM, SHIFT .BRAS	1					
61	703–48211–01	.HOUSING,1 .CORPS	1					
62	703–48232–00	.GEAR .PIGNON	1					
63	703–82542–00	.CAP .COUVERCLE	2					FOR 703-48201-16 FOR 703-48201-16
	703–82542–00	.CAP .COUVERCLE	3					*6 *6
	703–82542–00	.CAP .COUVERCLE	1					*7 *7
64	703–48218–00	.GRAPHIC .ADHESIF	1					*5 *5
65	702–48287–00	.WASHER .RONDELLE	3					FOR TWIN FOR TWIN

FIG. 9 REMOTE CONTROL ASSY 5 BOITIER DE COMMANDE A DISTANCE

704 REMOTE CONTROL (STANDARD SINGLE)

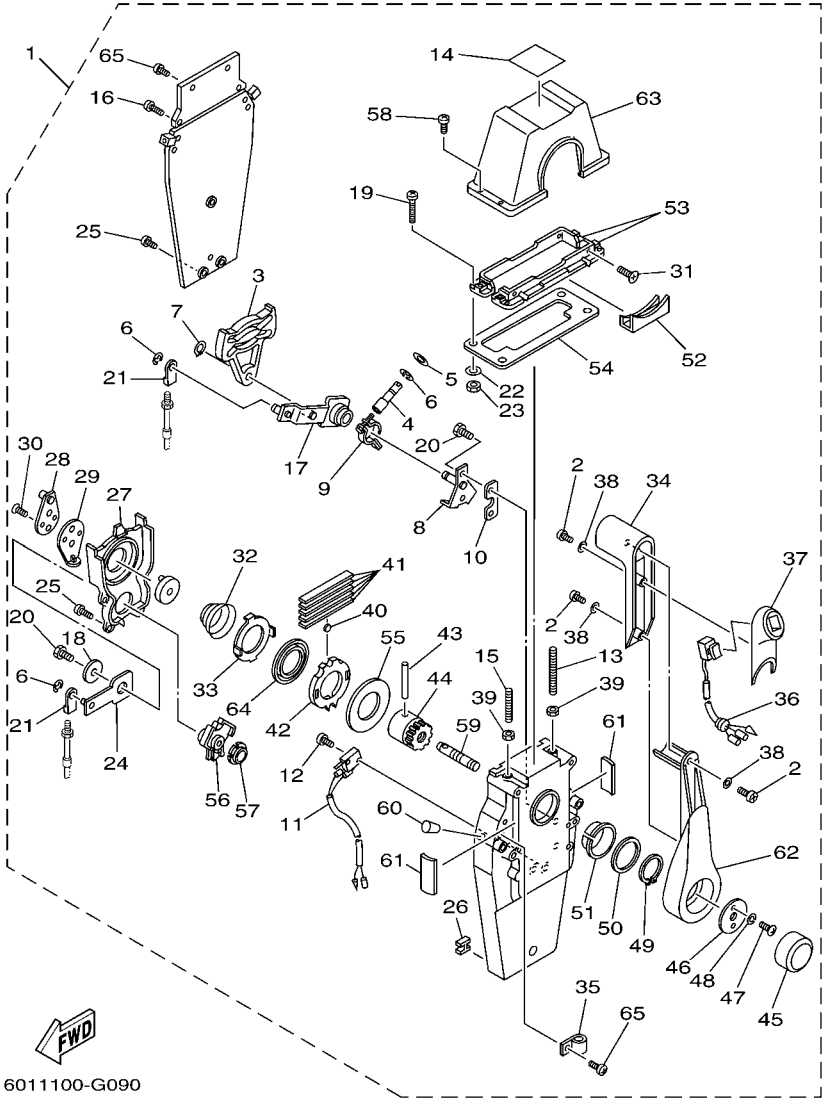

REF. NO.	PART NO. N° PIECES	DESCRIPTION DESCRIPTION	2008					REMARKS REMARQUES
1	704–48205–B1	REMOTE CONTROL ASSY BOITIER DE COMMANDE A DISTANCE	1					WITH PT/T SW. WITH PT/T SW.
2	704–48128–00	.SCREW 2 .VIS 2	3					
3	EL8–48251–00	.PLATE, CAM .PLAQUE, CAME	1					
4	704–48265–00	.SHAFT, FRICTION .AXE, COPILOTE	1					
5	701–48246–00	.SPACER .ENTRETOISE	1					
6	93430–06024	.CIRCLIP .CLIPS	4					
7	EL8–48259–00	.CIRCLIP 1 .CIRCLIP	1					
8	704–48262–00	.SHAFT, THROTTLE .AXE, ACCELERATION	1					
9	704–48264–00	.THROTTLE, FRICTION .FRICTION, ACCELERATION	1					
10	704–48266–00	.SPACER .ENTRETOISE	1					
11	704–82540–20	.NEUTRAL SWITCH ASSY .CONTACTEUR DE POINT-MORT	1					
12	6A5–48129–10	.SCREW 3 .VIS 3	2					
13	EL8–48281–00	.SCREW .VIS	1					
14	704–48215–00	.GRAPHIC .ADHESIF	1					
15	704–48281–00	.SCREW .VIS	1					
16	97890–05025	.SCREW, PAN HEAD .VIS, CRUCIFORME	2					
17	704–48261–00	.ARM, THROTTLE .BRAS, ACCELERATION	1					
18	EL8–48191–00	.WASHER 1 .RONDELLE	1					
19	704–48283–00	.SCREW .VIS	4					
20	97380–06018	.BOLT .BOULON, HEXAGONAL	3					
21	703–48345–01	.CABLE END, REMOTE CONTROL 2 .CHAPE CABLE	2					
22	704–48287–00	.WASHER .RONDELLE	4					
23	95380–05600	.NUT .ECROU	4					
24	EL8–48271–10	.ARM, SHIFT .BRAS	1					
25	EL8–48127–00	.SCREW 1 .VIS 1	9					
26	703–48358–00	.ANCHOR, CABLE .COLLIER	1					
27	EL8–48231–00	.HOUSING, GEAR .CARTER, ENGRENAGE	1					

704 REMOTE CONTROL (STANDARD SINGLE)

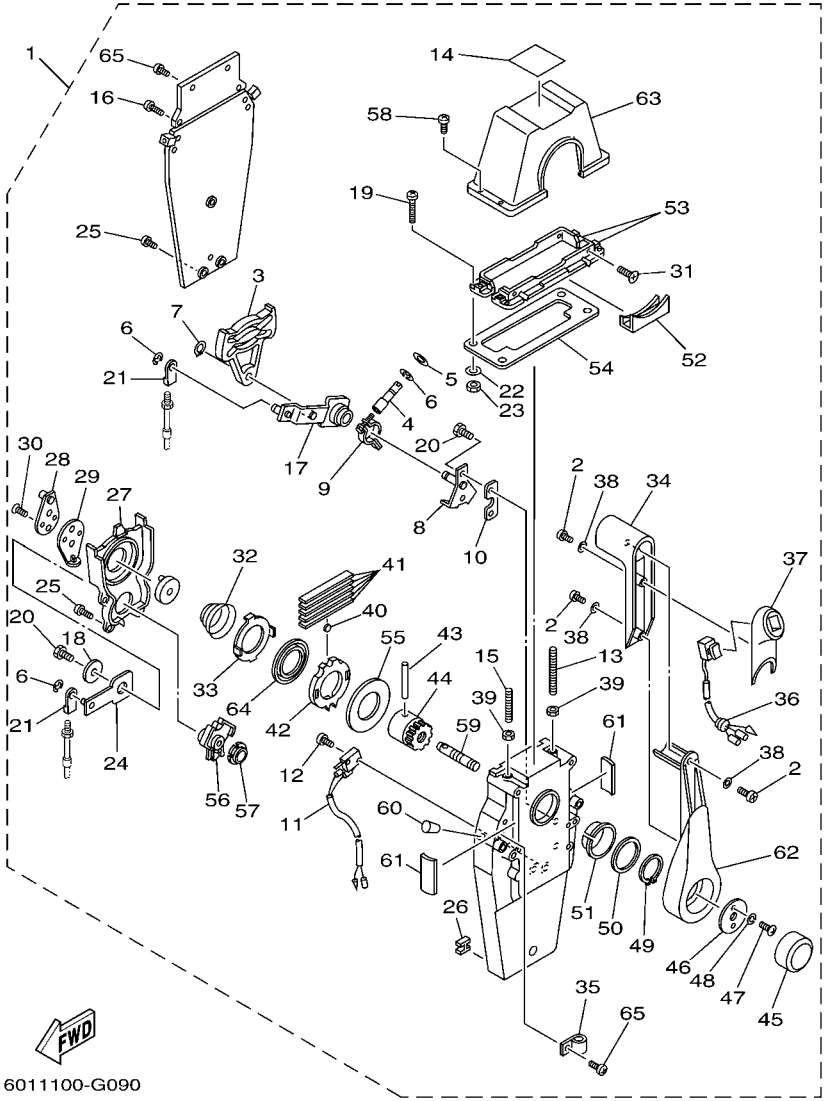

FIG. 9 REMOTE CONTROL ASSY 5 BOITIER DE COMMANDE A DISTANCE

REF. NO.	PART NO. N° PIECES	DESCRIPTION DESCRIPTION	2008					REMARKS REMARQUES
28	EL8–48241–10	.ARM, DRIVE .BRAS, COMMANDE	1					
29	EL8–48254–10	.STOPPER, THROTTLE ADJUST .BUTEE	1					
30	92780–06020	.SCREW, FLAT HEAD .VIS A TETE FRAISEE	2					
31	98780–05018	.SCREW, FLAT HEAD .VIS A TETE FRAISEE	4					
32	EL8–48244–00	.SPRING, FREE ACCEL. .RESSORT	1					
33	EL8–48245–00	.PLATE, LOCK .PLAQUE, VERROU	1					
34	704–48222–B0	.GRIP, CONTROL LEVER .POIGNEE, COMMANDE LEVIER	1					
35	704–82594–00	.CLAMP .BRIDE	1					
36	704–82563–41	.TRIM & TILT SWITCH ASSY .INCLINER ET PARER COMMUTATEUR	1					
37	704–48229–B1	.GRIP, CONTROL LEVER .POIGNEE, COMMANDE LEVIER	1					
38	92990–05300	.WASHER, INTERNAL TOOTH .RONDELLE, DENTURE INTERNE	3					
39	95380–06600	.NUT, HEXAGON .ECROU	2					
40	701–48248–00	.ROLLER, FREE ACCEL. .POULIE	1					
41	704–48238–00	.SPRING, DETENT .RESSORT	5					
42	EL8–48232–00	.GEAR 1 .PIGNON	1					
43	EL8–48164–00	.PIN 2 .PION 2	1					
44	704–48242–00	.SHAFT, DRIVE .ARBRE, MOTEUR	1					
45	6X3–48225–20	.COVER .COUVERCLE	1					
46	704–48192–00	.WASHER 2 .RONDELLE 2	1					
47	97890–06018	.SCREW, PAN HEAD .VIS, CRUCIFORME	2					
48	92990–06300	.WASHER, INTERNAL TOOTH .RONDELLE, DENTURE INTERNE	2					
49	EL8–48279–00	.CIRCLIP 2 .CIRCLIP 2	1					
50	704–48193–00	.WASHER 3 .RONDELLE 3	1					
51	EL8–48234–00	.BUSHING 1 .POULIE	1					
52	704–48219–B0	.COVER, LEAD .COUVERCLE	1					
53	704–48144–00	.PLATE, STOPPER 2 .PLAQUETTE 2	2					
54	704–48176–00	.GROMMET .PASSE-FIL	1					

FIG. 9 REMOTE CONTROL ASSY 5 BOITIER DE COMMANDE A DISTANCE

704 REMOTE CONTROL (STANDARD SINGLE)

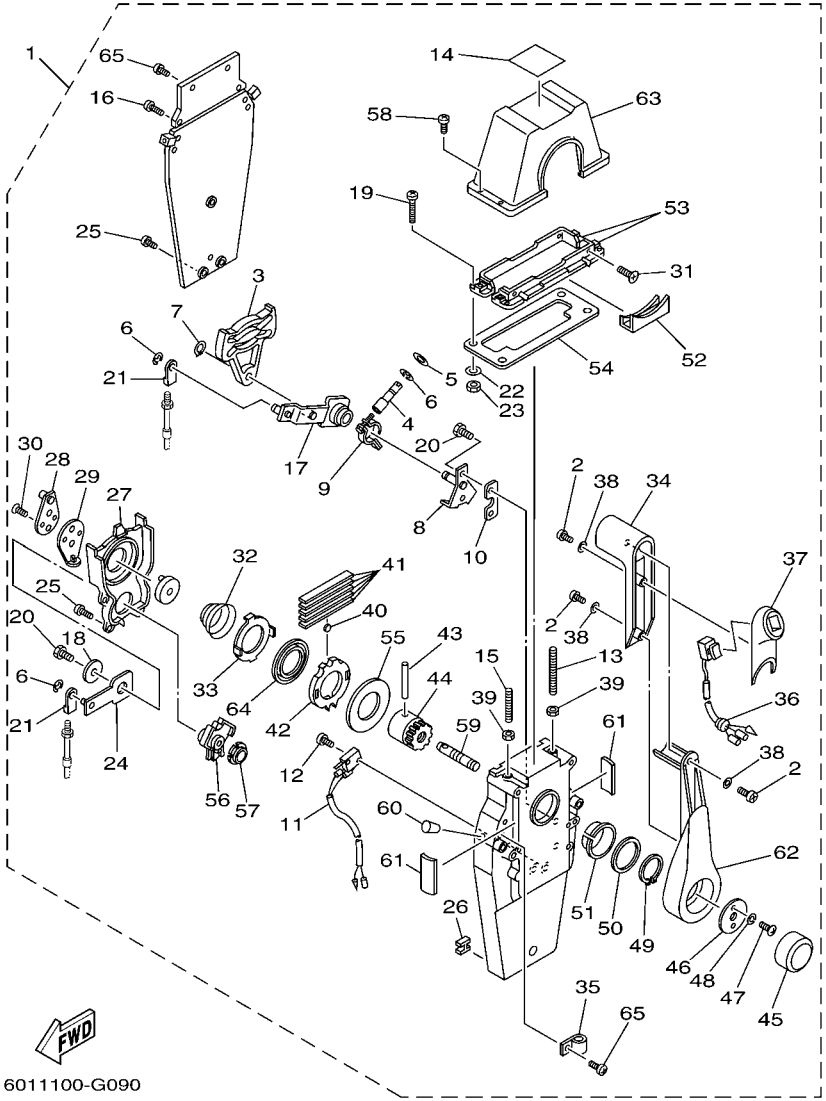

REF. NO.	PART NO. N° PIECES	DESCRIPTION DESCRIPTION	2008					REMARKS REMARQUES
55	703–48192–00	.WASHER 2 .RONDELLE 2	1					
56	EL8–48233–00	.GEAR 2 .PIGNON 2	1					
57	702–48235–00	.BUSHING .COUSSINET	1					
58	704–48282–00	.SCREW .VIS	4					
59	704–48153–00	.SHAFT, FREE ACCEL. .AXE	1					
60	704–48166–00	.PLUG .BOUCHON	1					
61	704–48284–00	.GROMMET .PASSE-FIL	2					
62	704–48221–B0	.LEVER, CONTROL .LEVIER, COMMANDE	1					
63	704–48119–B0	.COVER .COQUILLE	1					
64	704–48178–10	.PLATE, SHIFT .PLAQUETTE	1					
65	97890–05016	.SCREW, PAN HEAD .VIS, CRUCIFORME	3					

704 REMOTE CONTROL (PREMIUM SINGLE)

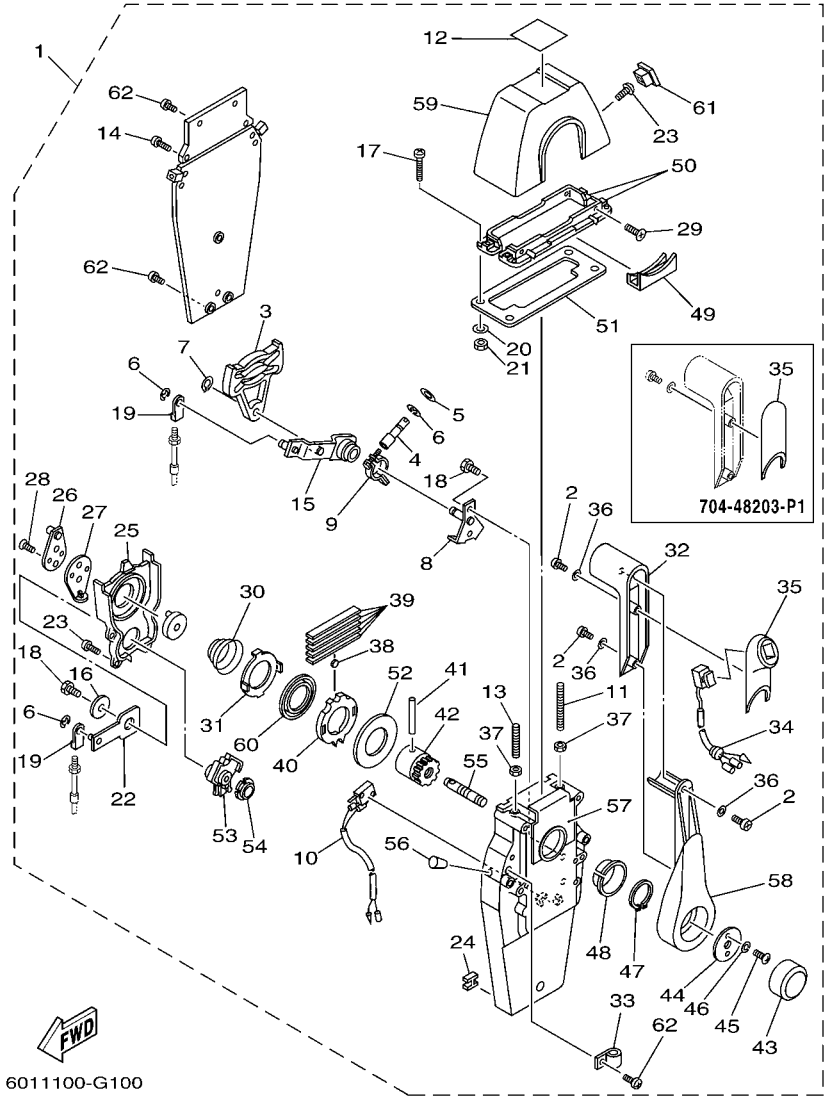

FIG. 10 REMOTE CONTROL ASSY 6 BOITIER DE COMMANDE A DISTANCE

REF. NO.	PART NO. N° PIECES	DESCRIPTION DESCRIPTION	2008					REMARKS REMARQUES
1	704–48203–P1	REMOTE CONTROL ASSY (RIGHT) BOITIER DE COMMANDE A DISTANCE	1					UR WITHOUT PT/T SW. UR WITHOUT PT/T SW.
	704–48205–P1	REMOTE CONTROL ASSY (RIGHT) BOITIER DE COMMANDE A DISTANCE	1					UR WITH PT/T SW. UR WITH PT/T SW.
	704–48206–P1	REMOTE CONTROL ASSY (LEFT) BOITIER DE COMMANDE A DISTANCE	1					UR WITH PT/T SW. UR WITH PT/T SW.
2	704–48128–00	.SCREW 2 .VIS 2	3					
3	EL8–48251–00	.PLATE, CAM .PLAQUE, CAME	1					
4	704–48265–00	.SHAFT, FRICTION .AXE, COPILOTE	1					
5	701–48246–00	.SPACER .ENTRETOISE	1					
6	93430–06024	.CIRCLIP .CLIPS	4					
7	EL8–48259–00	.CIRCLIP 1 .CIRCLIP	1					
8	704–48262–00	.SHAFT, THROTTLE .AXE, ACCELERATION	1					
9	704–48264–00	.THROTTLE, FRICTION .FRICTION, ACCELERATION	1					
10	704–82540–20	.NEUTRAL SWITCH ASSY .CONTACTEUR DE POINT-MORT	1					
11	EL8–48281–00	.SCREW .VIS	1					
12	704–48215–20	.GRAPHIC .ADHESIF	1					
13	704–48281–00	.SCREW .VIS	1					
14	97890–05025	.SCREW, PAN HEAD .VIS, CRUCIFORME	2					
15	704–48261–00	.ARM, THROTTLE .BRAS, ACCELERATION	1					
16	EL8–48191–00	.WASHER 1 .RONDELLE	1					
17	704–48283–00	.SCREW .VIS	4					
18	97380–06018	.BOLT .BOULON, HEXAGONAL	3					
19	703–48345–01	.CABLE END, REMOTE CONTROL 2 .CHAPE CABLE	2					
20	704–48287–00	.WASHER .RONDELLE	4					
21	95380–05600	.NUT .ECROU	4					
22	704–48271–00	.ARM, SHIFT .BRAS	1					
23	EL8–48127–00	.SCREW 1 .VIS 1	10					
24	703–48358–00	.ANCHOR, CABLE .COLLIER	1					
25	704–48231–00	.HOUSING, GEAR .CARTER, ENGRENAGE	1					

704 REMOTE CONTROL (PREMIUM SINGLE)

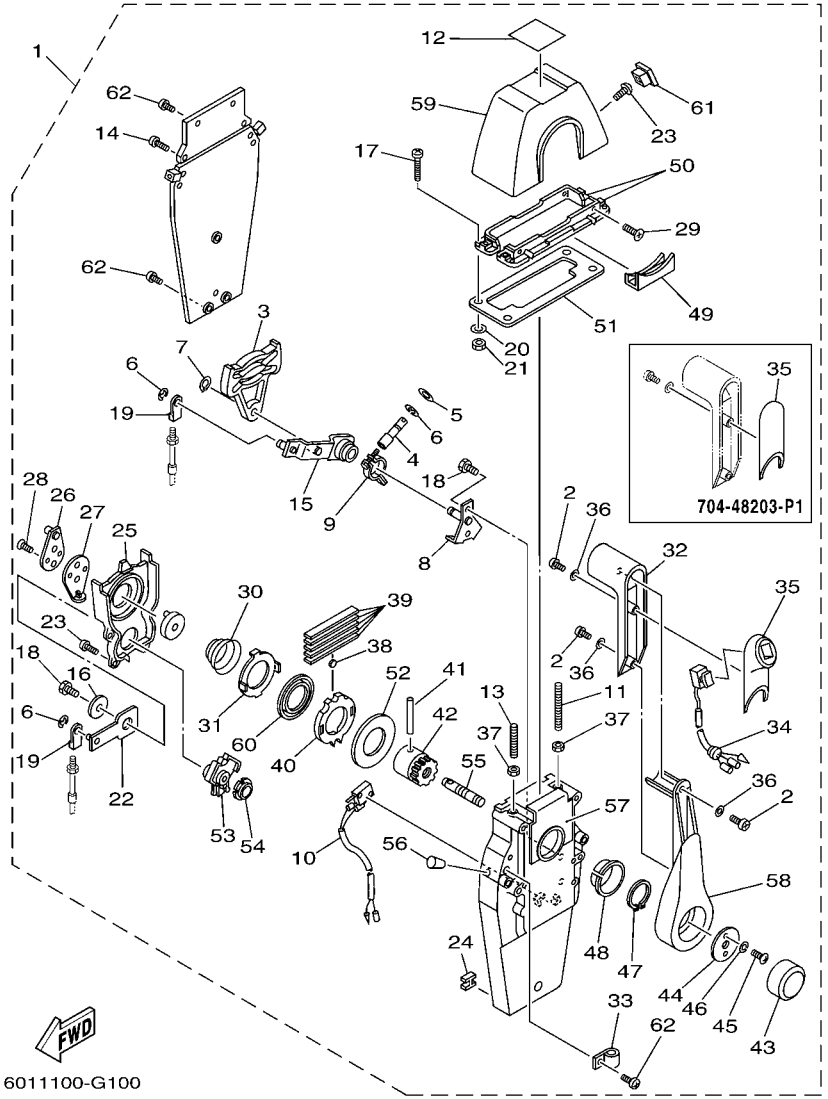

FIG. 10 REMOTE CONTROL ASSY 6 BOITIER DE COMMANDE A DISTANCE

REF. NO.	PART NO. N° PIECES	DESCRIPTION DESCRIPTION	2008					REMARKS REMARQUES
26	EL8–48241–00	.ARM, DRIVE .BRAS, COMMANDE	1					
27	EL8–48254–00	.STOPPER, THROTTLE ADJUSTING .BUTEE	1					
28	92780–06020	.SCREW, FLAT HEAD .VIS A TETE FRAISEE	2					
29	98780–05018	.SCREW, FLAT HEAD .VIS A TETE FRAISEE	4					
30	EL8–48244–00	.SPRING, FREE ACCEL. .RESSORT	1					
31	EL8–48245–00	.PLATE, LOCK .PLAQUE, VERROU	1					
32	704–48222–P0	.GRIP, CONTROL LEVER .POIGNEE, COMMANDE LEVIER	1					
33	704–82594–00	.CLAMP .BRIDE	1					
34	704–82563–41	.TRIM & TILT SWITCH ASSY .INCLINER ET PARER COMMUTATEUR	1					WITH PT/T SW. WITH PT/T SW.
35	704–48229–R0	.GRIP, CONTROL LEVER .POIGNEE, COMMANDE LEVIER	1					WITHOUT PT/T SW. WITHOUT PT/T SW.
	704–48229–P1	.GRIP, CONTROL LEVER .POIGNEE, COMMANDE LEVIER	1					WITH PT/T SW. WITH PT/T SW.
36	92990–05300	.WASHER, INTERNAL TOOTH .RONDELLE, DENTURE INTERNE	3					
37	95380–06600	.NUT, HEXAGON .ECROU	2					
38	701–48248–00	.ROLLER, FREE ACCEL. .POULIE	1					
39	704–48238–00	.SPRING, DETENT .RESSORT	5					
40	704–48232–P1	.GEAR .PIGNON	1					
41	EL8–48164–00	.PIN 2 .PION 2	1					
42	704–48242–10	.SHAFT, DRIVE .ARBRE, MOTEUR	1					
43	6X3–48225–20	.COVER .COUVERCLE	1					
44	704–48192–00	.WASHER 2 .RONDELLE 2	1					
45	97890–06018	.SCREW, PAN HEAD .VIS, CRUCIFORME	2					
46	92990–06300	.WASHER, INTERNAL TOOTH .RONDELLE, DENTURE INTERNE	2					
47	EL8–48279–00	.CIRCLIP 2 .CIRCLIP 2	1					
48	704–48234–00	.BUSHING 1 .POULIE	1					
49	704–48219–P0	.COVER, LEAD .COUVERCLE	1					
50	704–48144–10	.PLATE, STOPPER 2 .PLAQUETTE 2	2					
51	704–48176–00	.GROMMET .PASSE-FIL	1					

704 REMOTE CONTROL (PREMIUM SINGLE)

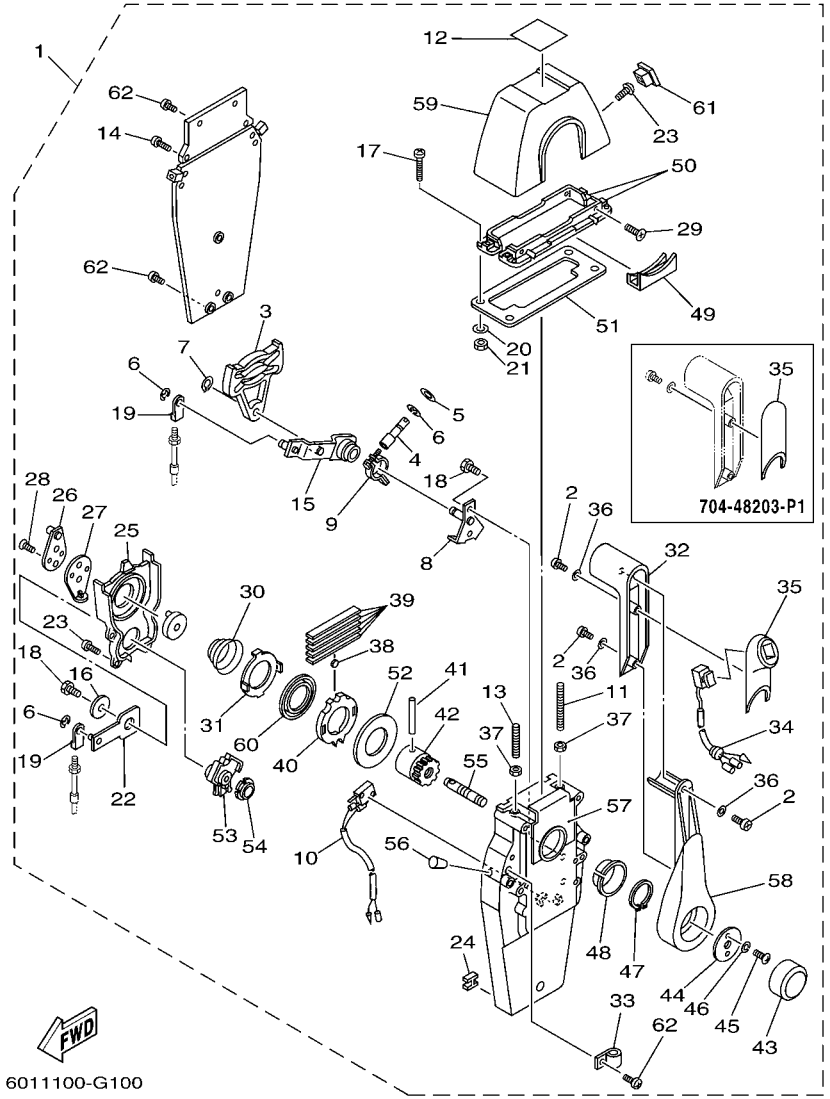

FIG. 10 REMOTE CONTROL ASSY 6 BOITIER DE COMMANDE A DISTANCE

REF. NO.	PART NO. N° PIECES	DESCRIPTION DESCRIPTION	2008					REMARKS REMARQUES
52	704–48192–P0	.WASHER 2 .RONDELLE 2	1					
53	704–48233–00	.GEAR 2 .PIGNON 2	1					
54	704–48235–00	.BUSHING .COUSSINET	1					
55	704–48153–00	.SHAFT, FREE ACCEL. .AXE	1					
56	704–48166–00	.PLUG .BOUCHON	1					
57	704–48284–P0	.GROMMET .PASSE-FIL	1					
58	704–48221–P0	.LEVER, CONTROL .LEVIER, COMMANDE	1					
59	704–48119–31	.COVER .COQUILLE	1					
60	704–48178–10	.PLATE, SHIFT .PLAQUETTE	1					
61	704–48167–01	.PLUG .BOUCHON	1					
62	97890–05016	.SCREW, PAN HEAD .VIS, CRUCIFORME	2					WITHOUT PT/T SW. WITHOUT PT/T SW.
	97890–05016	.SCREW, PAN HEAD .VIS, CRUCIFORME	3					WITH PT/T SW. WITH PT/T SW.

FIG. 11 REMOTE CONTROL ASSY 7 BOITIER DE COMMANDE A DISTANCE

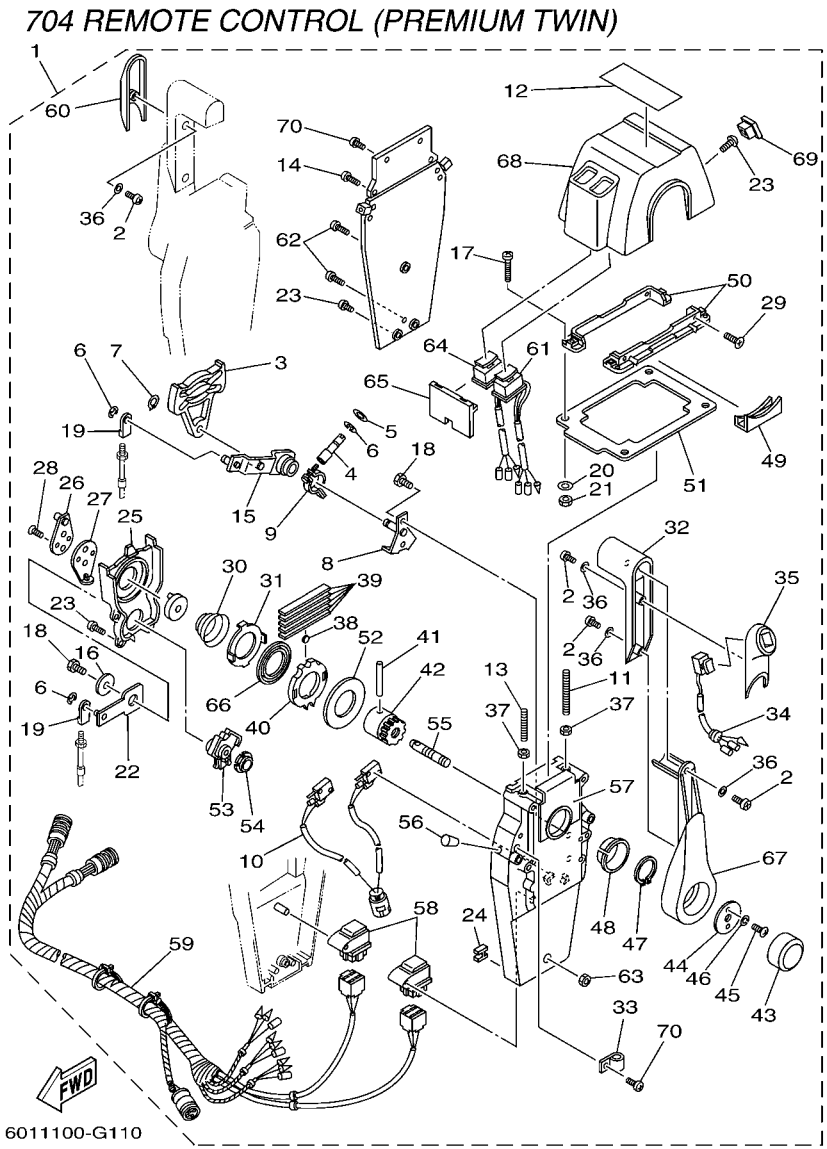

REF. NO.	PART NO. N° PIECES	DESCRIPTION DESCRIPTION	2008					REMARKS REMARQUES
1	704–48207–P1	REMOTE CONTROL ASSY BOITIER DE COMMANDE A DISTANCE	1					WITH PT/T SW. WITH PT/T SW.
2	704–48128–00	.SCREW 2 .VIS 2	6					
3	EL8–48251–00	.PLATE, CAM .PLAQUE, CAME	2					
4	704–48265–00	.SHAFT, FRICTION .AXE, COPILOTE	2					
5	701–48246–00	.SPACER .ENTRETOISE	2					
6	93430–06024	.CIRCLIP .CLIPS	8					
7	EL8–48259–00	.CIRCLIP 1 .CIRCLIP	2					
8	704–48262–00	.SHAFT, THROTTLE .AXE, ACCELERATION	2					
9	704–48264–00	.THROTTLE, FRICTION .FRICTION, ACCELERATION	2					
10	704–82540–30	.NEUTRAL SWITCH ASSY .CONTACTEUR DE POINT-MORT	1					
11	EL8–48281–00	.SCREW .VIS	2					
12	704–48215–30	.GRAPHIC .ADHESIF	1					
13	704–48281–00	.SCREW .VIS	2					
14	97890–05025	.SCREW, PAN HEAD .VIS, CRUCIFORME	4					
15	704–48261–00	.ARM, THROTTLE .BRAS, ACCELERATION	2					
16	EL8–48191–00	.WASHER 1 .RONDELLE	2					
17	704–48283–00	.SCREW .VIS	4					
18	97380–06018	.BOLT .BOULON, HEXAGONAL	6					
19	703–48345–01	.CABLE END, REMOTE CONTROL 2 .CHAPE CABLE	4					
20	704–48287–00	.WASHER .RONDELLE	4					
21	95380–05600	.NUT .ECROU	4					
22	704–48271–00	.ARM, SHIFT .BRAS	2					
23	EL8–48127–00	.SCREW 1 .VIS 1	18					
24	703–48358–00	.ANCHOR, CABLE .COLLIER	2					
25	704–48231–00	.HOUSING, GEAR .CARTER, ENGRENAGE	2					
26	EL8–48241–00	.ARM, DRIVE .BRAS, COMMANDE	2					
27	EL8–48254–00	.STOPPER, THROTTLE ADJUSTING .BUTEE	2					

FIG. 11 REMOTE CONTROL ASSY 7 BOITIER DE COMMANDE A DISTANCE

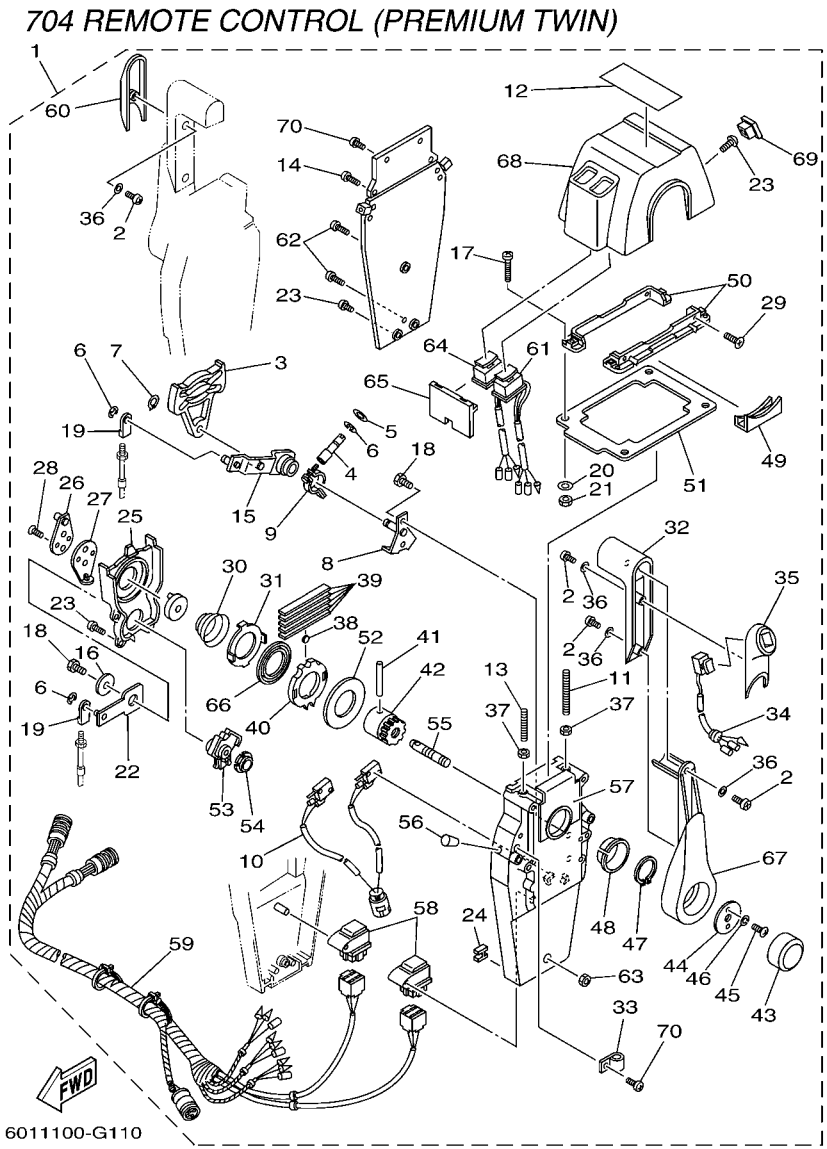

REF. NO.	PART NO. N° PIECES	DESCRIPTION DESCRIPTION	2008					REMARKS REMARQUES
28	92780–06020	.SCREW, FLAT HEAD .VIS A TETE FRAISEE	4					
29	98780–05018	.SCREW, FLAT HEAD .VIS A TETE FRAISEE	4					
30	EL8–48244–00	.SPRING, FREE ACCEL. .RESSORT	2					
31	EL8–48245–00	.PLATE, LOCK .PLAQUE, VERROU	2					
32	704–48222–P0	.GRIP, CONTROL LEVER .POIGNEE, COMMANDE LEVIER	2					
33	704–82594–00	.CLAMP .BRIDE	1					
34	704–82563–51	.TRIM & TILT SWITCH ASSY .INCLINER ET PARER COMMUTATEUR	1					
35	704–48229–P1	.GRIP, CONTROL LEVER .POIGNEE, COMMANDE LEVIER	1					
36	92990–05300	.WASHER, INTERNAL TOOTH .RONDELLE, DENTURE INTERNE	6					
37	95380–06600	.NUT, HEXAGON .ECROU	4					
38	701–48248–00	.ROLLER, FREE ACCEL. .POULIE	2					
39	704–48238–00	.SPRING, DETENT .RESSORT	10					
40	704–48232–P1	.GEAR .PIGNON	2					
41	EL8–48164–00	.PIN 2 .PION 2	2					
42	704–48242–10	.SHAFT, DRIVE .ARBRE, MOTEUR	2					
43	6X3–48225–20	.COVER .COUVERCLE	2					
44	704–48192–00	.WASHER 2 .RONDELLE 2	2					
45	97890–06018	.SCREW, PAN HEAD .VIS, CRUCIFORME	4					
46	92990–06300	.WASHER, INTERNAL TOOTH .RONDELLE, DENTURE INTERNE	4					
47	EL8–48279–00	.CIRCLIP 2 .CIRCLIP 2	2					
48	704–48234–00	.BUSHING 1 .POULIE	2					
49	704–48219–P0	.COVER, LEAD .COUVERCLE	2					
50	704–48144–20	.PLATE, STOPPER 2 .PLAQUETTE 2	2					
51	704–48176–10	.GROMMET .PASSE-FIL	1					
52	704–48192–P0	.WASHER 2 .RONDELLE 2	2					
53	704–48233–00	.GEAR 2 .PIGNON 2	2					
54	704–48235–00	.BUSHING .COUSSINET	2					

FIG. 11 REMOTE CONTROL ASSY 7 BOITIER DE COMMANDE A DISTANCE

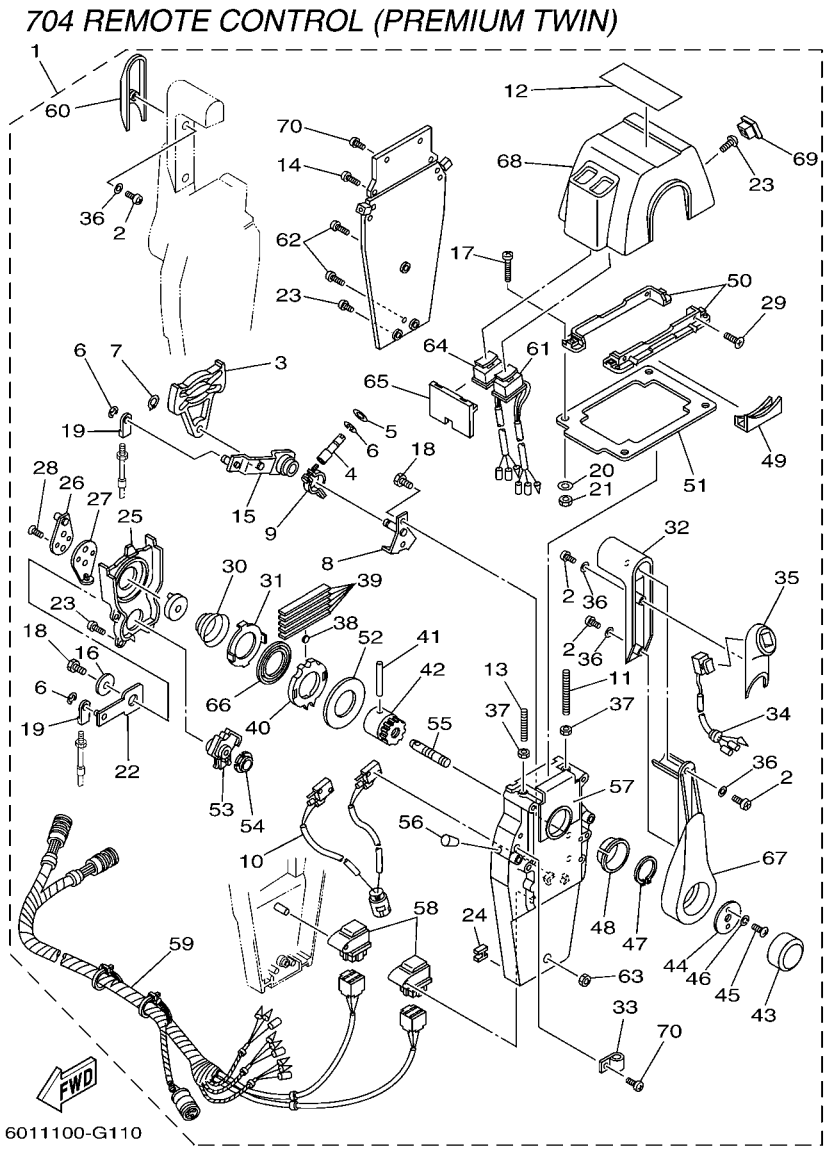

REF. NO.	PART NO. N° PIECES	DESCRIPTION DESCRIPTION	2008					REMARKS REMARQUES
55	704–48153–00	.SHAFT, FREE ACCEL. .AXE	2					
56	704–48166–00	.PLUG .BOUCHON	2					
57	704–48284–P0	.GROMMET .PASSE-FIL	2					
58	704–81950–10	.RELAY ASSY .RELAIS COMPLET	2					
59	704–82590–10	.WIRE HARNESS ASSY .FAISCEAU DE FILS COMPLET	1					
60	704–48229–R0	.GRIP, CONTROL LEVER .POIGNEE, COMMANDE LEVIER	1					
61	704–82563–H1	.TRIM & TILT SWITCH ASSY .INCLINER ET PARER COMMUTATEUR	1					
62	704–48128–00	.SCREW 2 .VIS 2	3					
63	704–48156–00	.NUT 1 .ECROU 1	1					
64	704–82563–J1	.TRIM & TILT SWITCH ASSY .INCLINER ET PARER COMMUTATEUR	1					
65	704–48285–10	.GROMMET 2 .PASSE-FIL 2	1					
66	704–48178–00	.PLATE, SHIFT .PLAQUETTE	2					
67	704–48221–P0	.LEVER, CONTROL .LEVIER, COMMANDE	2					
68	704–48119–41	.COVER .COQUILLE	1					
69	704–48167–11	.PLUG .BOUCHON	1					
70	97890–05016	.SCREW, PAN HEAD .VIS, CRUCIFORME	5					

6X3 REMOTE CONTROL

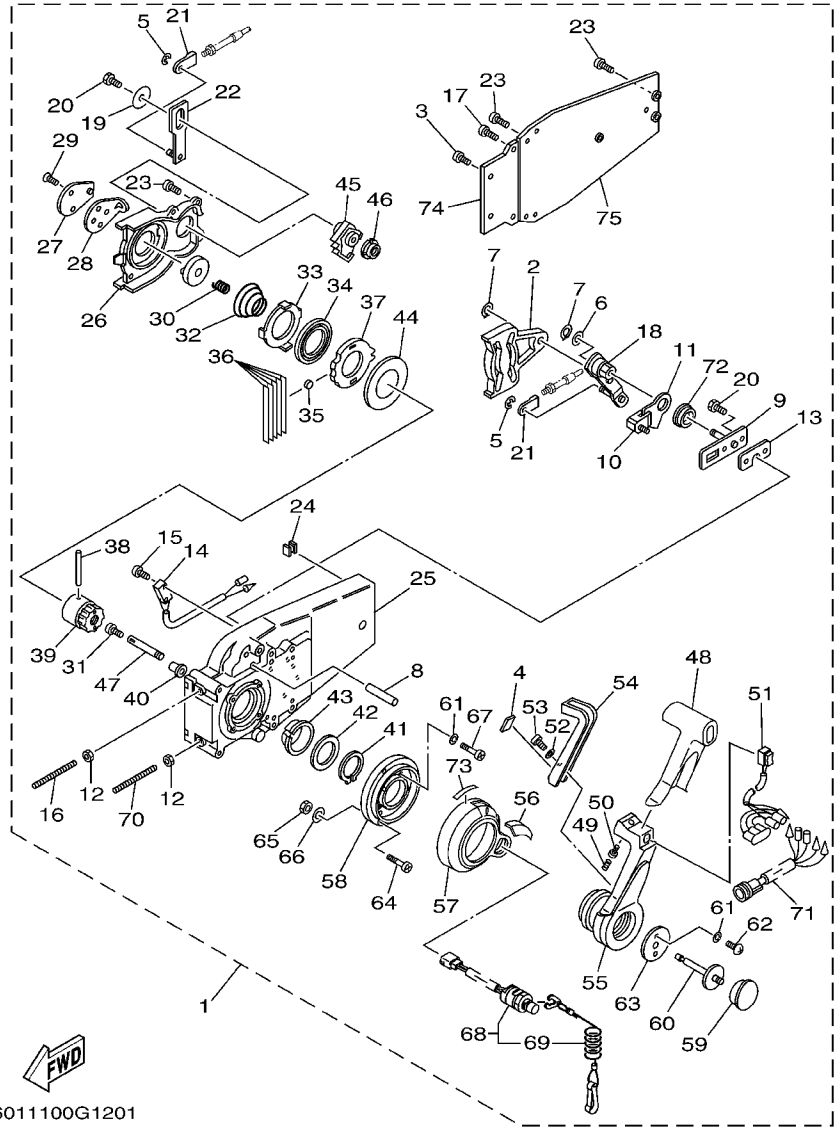

6011100G1201

FIG. 12 REMOTE CONTROL ASSY 8 BOITIER DE COMMANDE A DISTANCE

REF. NO.	PART NO. N° PIECES	DESCRIPTION DESCRIPTION	2008					REMARKS REMARQUES
1	6X3–48206–01	REMOTE CONTROL ASSY MONO LEVIER GAUCHE AVEC TRIM	1					WITH PT/T SW. WITH PT/T SW.
2	EL8–48251–00	.PLATE, CAM .PLAQUE, CAME	1					
3	97890–05016	.SCREW, PAN HEAD .VIS, CRUCIFORME	2					
4	6X0–48138–00	.CAP, LOCK ARM .AMORTISSEUR	1					
5	93430–06024	.CIRCLIP .CLIPS	3					
6	92990–10600	.WASHER, PLATE .RONDELLE, PLATE	1					
7	EL8–48259–00	.CIRCLIP 1 .CIRCLIP	2					
8	6X0–48265–00	.SHAFT, FRICTION .AXE, COPILOTE	1					
9	6X0–48262–00	.SHAFT, THROTTLE .AXE, ACCELERATION	1					
10	6X0–48264–00	.THROTTLE, FRICTION .FRICTION, ACCELERATION	1					
11	6X0–48187–00	.PLATE, ADJUST .PLAQUE DE REGLAGE	1					
12	95380–06600	.NUT, HEXAGON .ECROU	2					
13	704–48266–00	.SPACER .ENTRETOISE	1					
14	704–82540–00	.NEUTRAL SWITCH ASSY .CONTACTEUR DE POINT-MORT	1					
15	98580–03015	.SCREW, PAN HEAD .VIS	2					
16	EL8–48281–00	.SCREW .VIS	1					
17	97890–05025	.SCREW, PAN HEAD .VIS, CRUCIFORME	2					
18	6X0–48261–00	.ARM, THROTTLE .BRAS, ACCELERATION	1					
19	EL8–48191–00	.WASHER 1 .RONDELLE	1					
20	97380–06018	.BOLT .BOULON, HEXAGONAL	3					
21	703–48345–01	.CABLE END, REMOTE CONTROL 2 .CHAPE CABLE	2					
22	EL8–48271–00	.ARM, SHIFT .BRAS	1					
23	EL8–48127–00	.SCREW 1 .VIS 1	11					
24	703–48358–00	.ANCHOR, CABLE .COLLIER	1					
25	6X0–48211–00	.HOUSING,1 .CORPS	1					
26	EL8–48231–00	.HOUSING, GEAR .CARTER, ENGRENAGE	1					
27	EL8–48241–00	.ARM, DRIVE .BRAS, COMMANDE	1					

6X3 REMOTE CONTROL

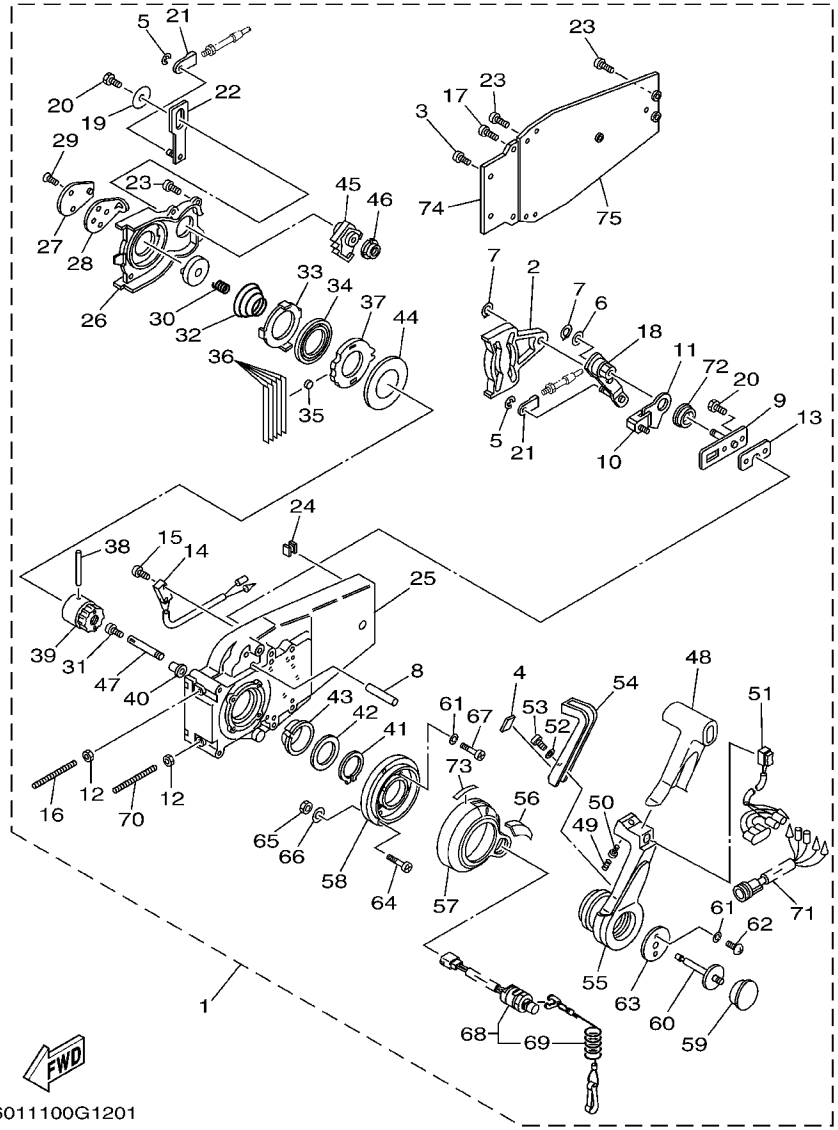

6011100G1201

FIG. 12 REMOTE CONTROL ASSY 8 BOITIER DE COMMANDE A DISTANCE

REF. NO.	PART NO. N° PIECES	DESCRIPTION DESCRIPTION	2008					REMARKS REMARQUES
28	EL8–48254–00	.STOPPER, THROTTLE ADJUSTING .BUTEE	1					
29	92780–06020	.SCREW, FLAT HEAD .VIS A TETE FRAISEE	2					
30	EL8–48158–00	.SPRING 1 .RESSORT 1	1					
31	98580–04006	.SCREW, PAN HEAD .VIS	1					
32	EL8–48244–00	.SPRING, FREE ACCEL. .RESSORT	1					
33	EL8–48245–00	.PLATE, LOCK .PLAQUE, VERROU	1					
34	704–48178–00	.PLATE, SHIFT .PLAQUETTE	1					
35	701–48248–00	.ROLLER, FREE ACCEL. .POULIE	1					
36	704–48238–00	.SPRING, DETENT .RESSORT	5					
37	6X0–48121–00	.GEAR 1 .PIGNON 1	1					
38	EL8–48164–00	.PIN 2 .PION 2	1					
39	EL8–48242–10	.SHAFT, DRIVE .ARBRE, MOTEUR	1					
40	702–48263–00	.BUSHING .COUSSINET	1					
41	EL8–48279–00	.CIRCLIP 2 .CIRCLIP 2	1					
42	704–48193–00	.WASHER 3 .RONDELLE 3	1					
43	EL8–48234–00	.BUSHING 1 .POULIE	1					
44	703–48192–00	.WASHER 2 .RONDELLE 2	1					
45	EL8–48233–00	.GEAR 2 .PIGNON 2	1					
46	702–48235–00	.BUSHING .COUSSINET	1					
47	6X0–48153–00	.SHAFT, FREE ACCEL. .AXE	1					
48	6X3–48222–01	.GRIP, CONTROL LEVER .POIGNEE, COMMANDE LEVIER	1					
49	703–48227–00	.SPRING, NEUTRAL LOCK .RESSORT	1					
50	98580–05008	.SCREW, PAN HEAD .VIS	1					
51	6X3–82563–01	.TRIM & TILT SWITCH ASSY .INCLINER ET PARER COMMUTATEUR	1					
52	6X0–48288–00	.WASHER, PLAIN .RONDELLE, PLATE	1					
53	6X0–48127–00	.SCREW 1 .VIS 1	1					
54	6X0–48223–00	.LOCK, NEUTRAL .VERROU, NEUTRAL	1					

6X3 REMOTE CONTROL

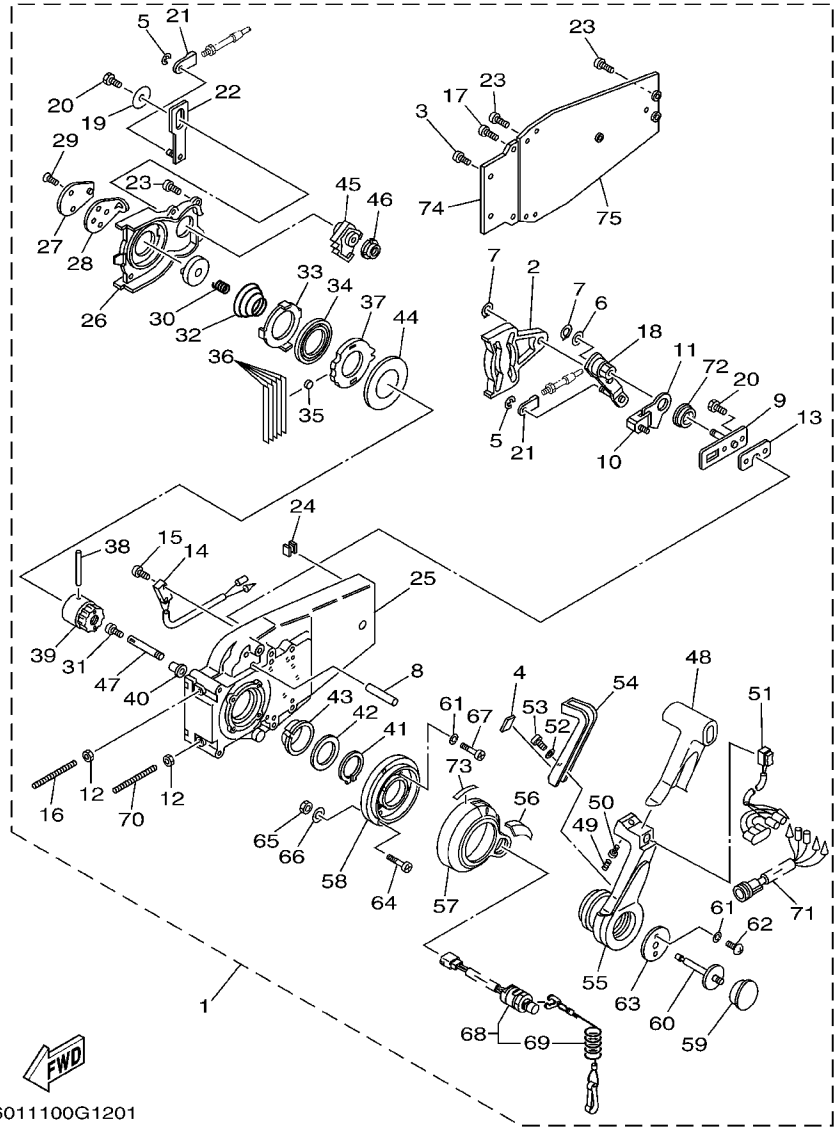

6011100G1201

FIG. 12 REMOTE CONTROL ASSY 8 BOITIER DE COMMANDE A DISTANCE

REF. NO.	PART NO. N° PIECES	DESCRIPTION DESCRIPTION	2008					REMARKS REMARQUES
55	6X3–48221–00	.LEVER, CONTROL .LEVIER, COMMANDE	1					
56	6X3–48225–10	.COVER .COUVERCLE	1					
57	6X3–48225–00	.COVER .COUVERCLE	1					
58	6X3–48111–00	.BODY, REMOTE CONTROL 1 .CORPS, TELECOMMANDE 1	1					
59	6X3–48225–20	.COVER .COUVERCLE	1					
60	6X0–48155–00	.PLUNGER .POUSSOIR	1					
61	92990–05300	.WASHER, INTERNAL TOOTH .RONDELLE, DENTURE INTERNE	6					
62	6X0–48281–00	.SCREW .VIS	2					
63	6X0–48193–00	.WASHER 3 .RONDELLE 3	1					
64	97890–06035	.SCREW, PAN HEAD .VIS, CRUCIFORME	3					UR UR
	6X0–48128–00	.SCREW(M6X30) .VIS 2	3					UR UR
65	6X0–48156–00	.NUT 1 .ECROU 1	3					
66	701–48287–00	.WASHER .RONDELLE	3					
67	6X3–48129–00	.SCREW 3 .VIS 3	4					
68	6X3–82575–00	.ENGINE STOP SWITCH ASSY .COUPE CIRCUIT CPLT	1					
69	682–82556–00	..LANYARD, STOP SWITCH ..PLAQUETTE	1					
70	704–48281–00	.SCREW .VIS	1					
71	704–82541–10	.WIRE, LEAD .FIL	1					
72	6X0–48116–00	.BUSHING .COUSSINET	1					
73	6X3–44191–00	.INDICATOR, SHIFT .ETIQUETTE, EMBRAYAGE	1					
74	EL8–48212–00	.BACK PLATE 1 .PLAQUETTE 1	1					
75	EL8–48213–00	.BACK PLATE 2 .PLAQUETTE 2	1					

FIG. 13 REMOTE CONTROL ASSY 9 BOITIER DE COMMANDE A DISTANCE

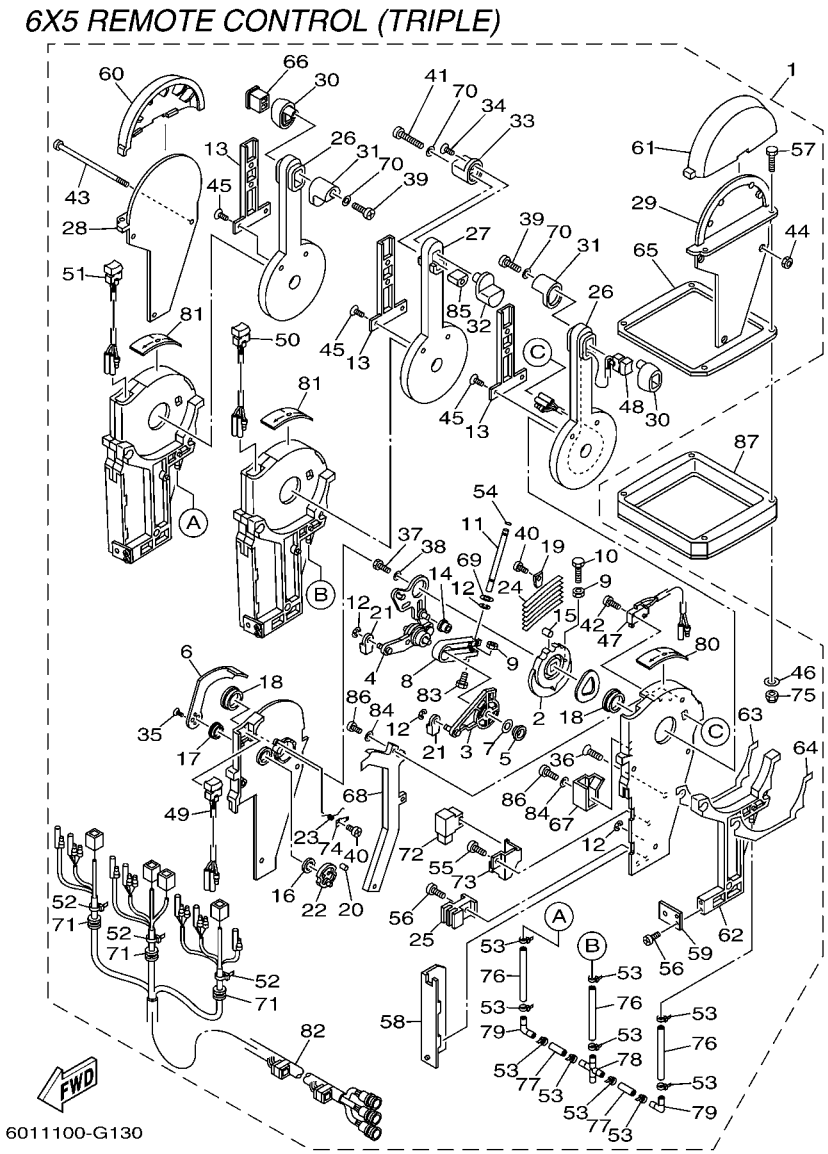

REF. NO.	PART NO. N° PIECES	DESCRIPTION DESCRIPTION	2008					REMARKS REMARQUES
1	6X5–48207–01	REMOTE CONTROL ASSY BOITIER DE COMMANDE A DISTANCE	1					WITH PT/T SW. WITH PT/T SW.
2	6X5–48232–00	.GEAR .PIGNON	3					
3	6X5–48271–00	.ARM, SHIFT .BRAS	3					
4	6X5–48261–00	.ARM, THROTTLE .BRAS, ACCELERATION	3					
5	703–48235–00	.BUSHING .COUSSINET	3					
6	6X5–48152–00	.KNOB, FREE ACCEL. .BOUTON	3					
7	703–48268–00	.SPACER .ENTRETOISE	3					
8	6X5–48264–00	.FRICTION, THROTTLE .FRICTION, ACCELERATION	3					
9	95380–05600	.NUT .ECROU	6					
10	97380–05025	.BOLT .BOULON, HEXAGONAL	3					
11	6X5–48265–00	.SHAFT, FRICTION .AXE, COPILOTE	3					
12	93430–06024	.CIRCLIP .CLIPS	12					
13	6X5–48224–00	.COVER, CONTROL LEVER .COUVERCLE	3					
14	703–48252–00	.ROLLER, CAM .POULIE	3					
15	701–48248–00	.ROLLER, FREE ACCEL. .POULIE	3					
16	703–48198–00	.WASHER, WAVE .RONDELLE, ELASTIQUE ONDULEE	3					
17	703–48243–00	.BUSHING .COUSSINET	3					
18	703–48236–00	.BUSHING 1 .POULIE	6					
19	703–48189–00	.RETAINER .FLASQUE	3					
20	703–48234–00	.ROLLER, DETENT .POULIE	3					
21	703–48345–01	.CABLE END, REMOTE CONTROL 2 .CHAPE CABLE	6					
22	703–48153–00	.SHAFT, FREE ACCEL. .AXE	3					
23	703–48244–00	.SPRING, FREE ACCEL. .RESSORT	3					
24	703–48238–00	.SPRING, DETENT .RESSORT	18					
25	6X5–48358–00	.ANCHOR, CABLE .COLLIER	3					
26	6X5–48221–00	.LEVER, CONTROL .LEVIER, COMMANDE	2					
27	6X5–48221–10	.LEVER, CONTROL .LEVIER, COMMANDE	1					

6X5 REMOTE CONTROL (TRIPLE)

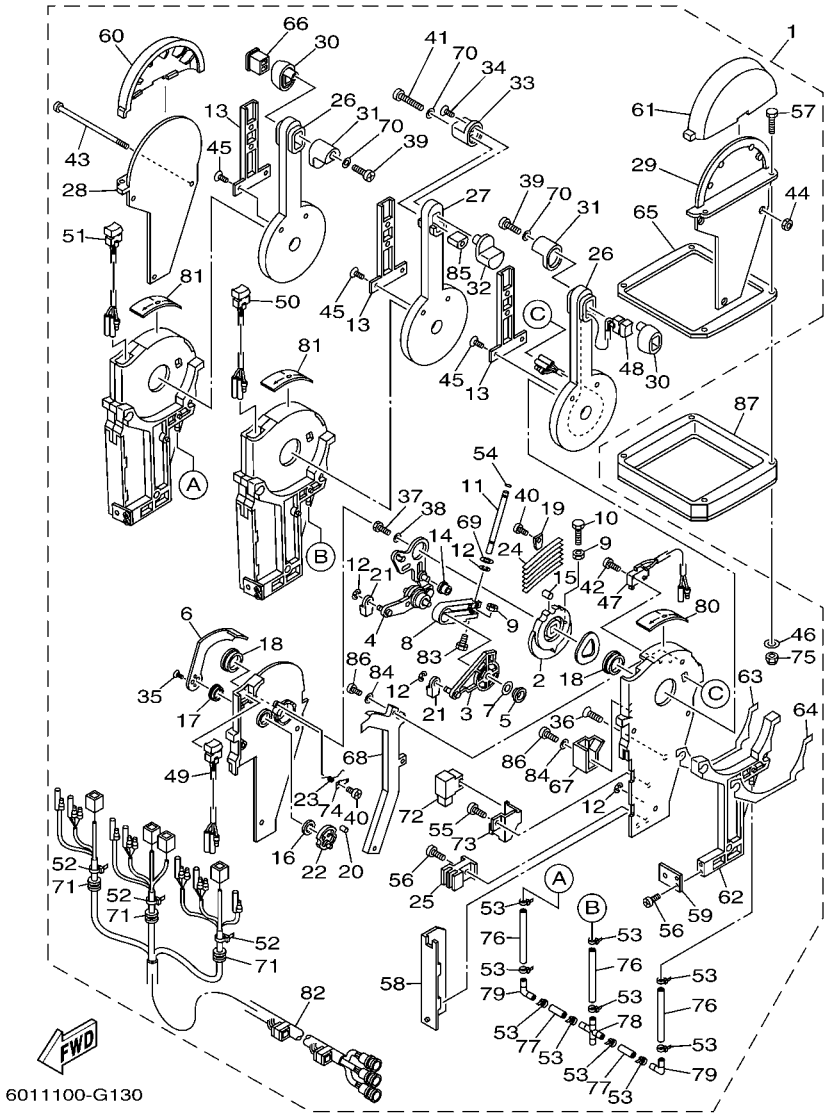

FIG. 13 REMOTE CONTROL ASSY 9 BOITIER DE COMMANDE A DISTANCE

REF. NO.	PART NO. N° PIECES	DESCRIPTION DESCRIPTION	2008					REMARKS REMARQUES
28	6X5–48144–10	.PLATE, STOPPER 2 .PLAQUETTE 2	1					
29	6X5–48144–00	.PLATE, STOPPER 2 .PLAQUETTE 2	1					
30	6X5–48229–00	.GRIP, CONTROL LEVER .POIGNEE, COMMANDE LEVIER	2					
31	6X5–48222–00	.GRIP, CONTROL LEVER .POIGNEE, COMMANDE LEVIER	2					
32	6X5–48229–10	.GRIP, CONTROL LEVER .POIGNEE, COMMANDE LEVIER	1					
33	6X5–48222–10	.GRIP, CONTROL LEVER .POIGNEE, COMMANDE LEVIER	1					
34	6X5–48127–00	.SCREW 1 .VIS 1	1					
35	703–48128–00	.SCREW 2 .VIS 2	6					
36	6X5–48129–00	.SCREW 3 .VIS 3	9					
37	97380–08030	.BOLT .BOULON, HEXAGONAL	3					
38	92990–08200	.WASHER, PLAIN .RONDELLE, PLATE	3					
39	6X5–48127–10	.SCREW 1 .VIS 1	2					
40	98580–04006	.SCREW, PAN HEAD .VIS	6					
41	6X5–48127–20	.SCREW 1 .VIS 1	1					
42	98580–03015	.SCREW, PAN HEAD .VIS	6					
43	6X5–48267–00	.BOLT SET .BOULON ENS.	3					
44	95780–06300	.NUT, FLANGE .ECROU	3					
45	98780–04010	.SCREW, FLAT HEAD .VIS A TETE FRAISEE	6					
46	704–48287–00	.WASHER .RONDELLE	4					
47	6X5–82540–00	.NEUTRAL SWITCH ASSY .CONTACTEUR DE POINT-MORT	3					
48	6X5–82563–01	.TRIM & TILT SWITCH ASSY .INCLINER ET PARER COMMUTATEUR	1					
49	6X5–82563–11	.TRIM & TILT SWITCH ASSY .INCLINER ET PARER COMMUTATEUR	1					
50	6X5–82563–21	.TRIM & TILT SWITCH ASSY .INCLINER ET PARER COMMUTATEUR	1					
51	6X5–82563–31	.TRIM & TILT SWITCH ASSY .INCLINER ET PARER COMMUTATEUR	1					
52	703–82591–00	.BAND .COLLIER	3					
53	6X4–42821–00	.BAND, CLAMP .BRIDE, COLLIER	14					
54	6X5–48351–00	.SEAL, RUBBER .PASSE-FIL	3					

FIG. 13 REMOTE CONTROL ASSY 9 BOITIER DE COMMANDE A DISTANCE

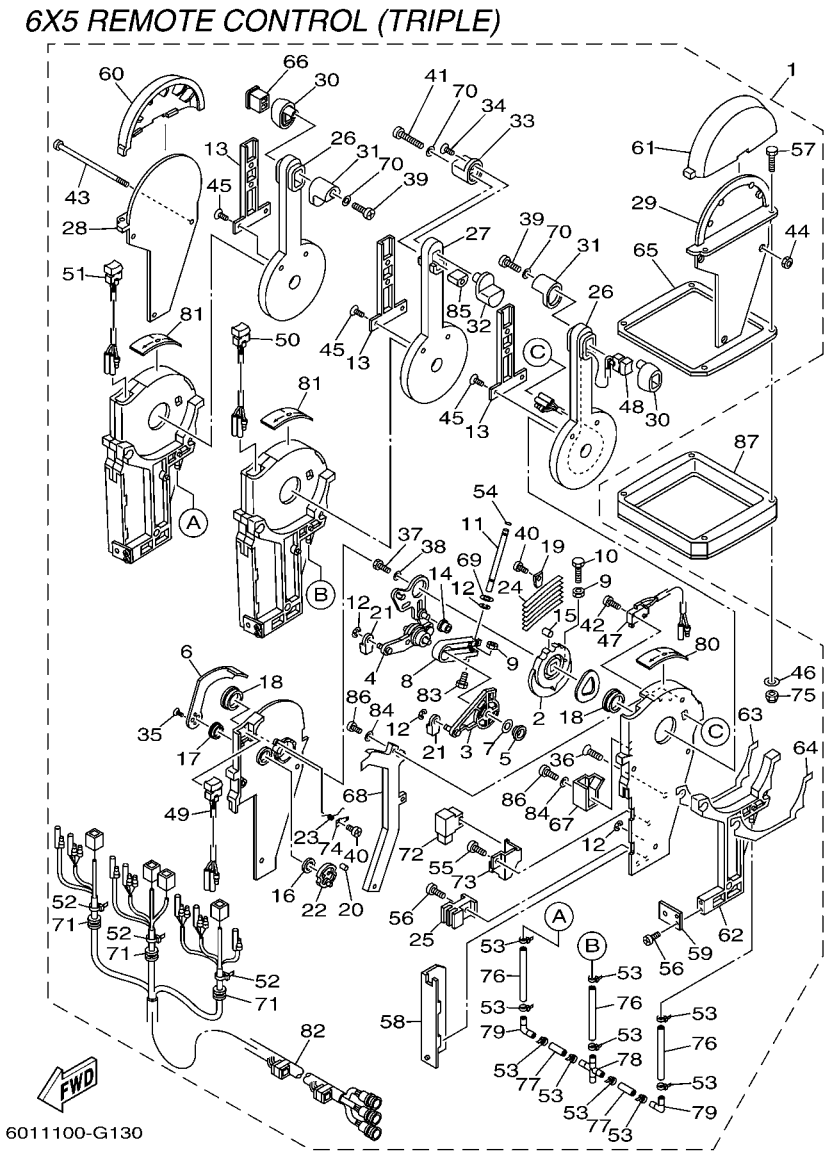

REF. NO.	PART NO. N° PIECES	DESCRIPTION DESCRIPTION	2008					REMARKS REMARQUES
55	98580–05010	.SCREW, PAN HEAD .VIS	3					
56	98580–05012	.SCREW, PAN HEAD .VIS	12					
57	98580–05040	.SCREW, PAN HEAD .VIS	4					UR UR
	97780–05130	.SCREW, TAPPING .VIS, TETE BOMBEE	4					UR UR
58	6X5–48213–00	.BACK PLATE 2 .PLAQUETTE 2	3					
59	6X5–48354–00	.SET-PLATE, CABLE .METTEZ LE CABLE DE LA PLAQUE	3					
60	6X5–48119–10	.COVER .COQUILLE	1					
61	6X5–48119–00	.COVER .COQUILLE	1					
62	6X5–48246–00	.SPACER .ENTRETOISE	3					
63	6X5–48214–00	.PAD .APPUI GAUCHE	3					
64	6X5–48214–10	.PAD .APPUI GAUCHE	3					
65	6X5–48176–00	.GROMMET .PASSE-FIL	1					
66	6X5–48222–20	.GRIP, CONTROL LEVER .POIGNEE, COMMANDE LEVIER	1					
67	6X5–48219–00	.COVER, LEAD .COUVERCLE	3					
68	6X5–48225–00	.COVER .COUVERCLE	3					
69	92990–08600	.WASHER, PLATE .RONDELLE, PLATE	3					
70	92990–05300	.WASHER, INTERNAL TOOTH .RONDELLE, DENTURE INTERNE	3					
71	6X5–48175–00	.BOOT .SOUFFLET	3					
72	704–81950–10	.RELAY ASSY .RELAIS COMPLET	4					
73	6X5–48228–00	.HOLDER, SWITCH .SUPPORT	3					
74	703–48246–00	.SPACER .ENTRETOISE	3					
75	95380–06600	.NUT, HEXAGON .ECROU	4					
76	6X5–48317–00	.TUBE .DURITE	3					
77	6X5–48317–10	.TUBE .DURITE	2					
78	6X5–48338–00	.CONNECTOR .CONNECTEUR	1					
79	6X5–48338–10	.CONNECTOR .CONNECTEUR	2					
80	6X5–48215–00	.GRAPHIC .ADHESIF	1					

FIG. 13 REMOTE CONTROL ASSY 9 BOITIER DE COMMANDE A DISTANCE

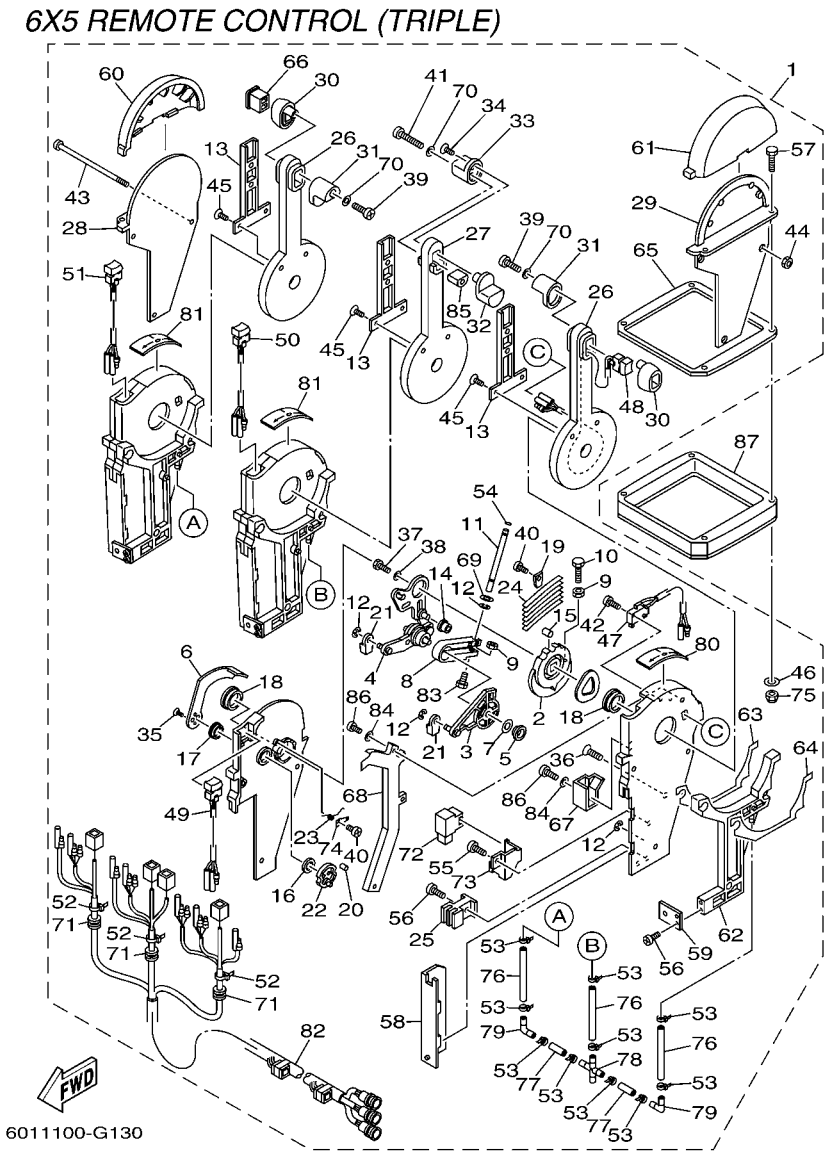

REF. NO.	PART NO. N° PIECES	DESCRIPTION DESCRIPTION	2008					REMARKS REMARQUES
81	6X5–48215–10	.GRAPHIC .ADHESIF	2					
82	6X5–82590–00	.WIRE HARNESS ASSY .FAISCEAU DE FILS COMPLET	1					
83	6X5–48267–00	.BOLT SET .BOULON ENS.	3					
84	92990–05200	.WASHER, PLAIN .RONDELLE, PLATE	15					
85	6X5–48222–30	.GRIP, CONTROL LEVER .POIGNEE, COMMANDE LEVIER	1					
86	98580–05012	.SCREW, PAN HEAD .VIS	15					
87	6X5–48293–00	SPACER, REMOTE CONTROL ENTRETOISE	1					LM LM

FIG. 14 REMOTE CONTROL CABLES CABLE COMMANDE A DISTANCE

REMOTE CONTROL CABLE

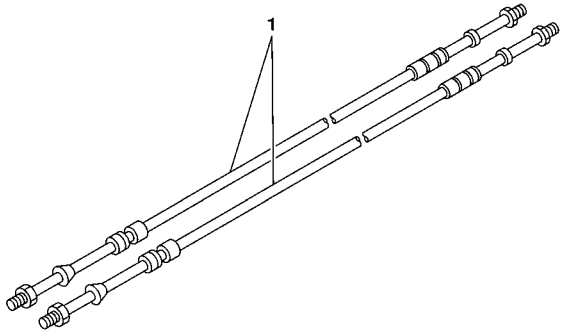

6011100-G140

REF. NO.	PART NO. N° PIECES	DESCRIPTION DESCRIPTION	2008					REMARKS REMARQUES
1	701–48310–10	CABLE, REMOTE CONTROL L=6F CABLE, COMMANDE A DISTANCE :6F	2					UR UR
	701–48310–20	CABLE, REMOTE CONTROL L=7F CABLE, COMMANDE A DISTANCE :7F	2					UR UR
	701–48310–40	CABLE, REMOTE CONTROL L=8F CABLE, COMMANDE A DISTANCE :8F	2					UR UR
	701–48310–60	CABLE, REMOTE CONTROL L=9F CABLE, COMMANDE A DISTANCE :9F	2					UR UR
	701–48310–80	CABLE, REMOTE CONTROL L=10F CABLE, COMMANDE A DISTANCE:10F	2					UR UR
	701–48310–90	CABLE, REMOTE CONTROL L=11F CABLE, COMMANDE A DISTANCE:11F	2					UR UR
	701–48320–00	CABLE, REMOTE CONTROL L=12F CABLE, COMMANDE A DISTANCE:12F	2					UR UR
	701–48320–20	CABLE, REMOTE CONTROL L=13F CABLE, COMMANDE A DISTANCE:13F	2					UR UR
	701–48320–30	CABLE, REMOTE CONTROL L=14F CABLE, COMMANDE A DISTANCE:14F	2					UR UR
	701–48320–50	CABLE, REMOTE CONTROL L=15F CABLE, COMMANDE A DISTANCE:15F	2					UR UR
	701–48320–60	CABLE, REMOTE CONTROL L=16F CABLE, COMMANDE A DISTANCE:16F	2					UR UR
	701–48320–80	CABLE, REMOTE CONTROL L=17F CABLE, COMMANDE A DISTANCE:17F	2					UR UR
	701–48320–90	CABLE, REMOTE CONTROL L=18F CABLE, COMMANDE A DISTANCE:18F	2					UR UR
	701–48320–40	CABLE, REMOTE CONTROL L=19F CABLE, COMMANDE A DISTANCE:19F	2					UR UR
	701–48320–70	CABLE, REMOTE CONTROL L=20F CABLE, COMMANDE A DISTANCE:20F	2					UR UR
	701–48350–00	CABLE, REMOTE CONTROL L=21F CABLE, COMMANDE A DISTANCE:21F	2					UR UR
	701–48350–10	CABLE, REMOTE CONTROL L=22F CABLE, COMMANDE A DISTANCE:22F	2					UR UR
	701–48350–20	CABLE, REMOTE CONTROL L=23F CABLE, COMMANDE A DISTANCE:23F	2					UR UR
	701–48350–30	CABLE, REMOTE CONTROL L=24F CABLE, COMMANDE A DISTANCE	2					UR UR
	701–48350–40	CABLE, REMOTE CONTROL L=25F CABLE, COMMANDE A DISTANCE	2					UR UR
	701–48350–50	CABLE, REMOTE CONTROL L=26F CABLE, COMMANDE A DISTANCE	2					UR UR
	701–48350–60	CABLE, REMOTE CONTROL L=27F CABLE, COMMANDE A DISTANCE:27F	2					UR UR

REMOTE CONTROL SPECIFICATION LIST (6X6 TYPE)

TYPE : 6X6	MECHANICAL SPECIFICATION								
TYPE : 6X6	LIST UP SEC.	TYPE CODE	SERIAL NO.	ENGINE			SINGLE STATION	DUAL STATION	
PART NO.	FIG.NO.-REF.NO.			SINGLE	TWIN	TRIPLE		MAIN	SUB
6X6-48205-00	15-1	A	6X6:0000001-	○	＊	＊	○	＊	＊
6X6-48205-10		C	6X6:1000001-	○	＊	＊	*	○	＊
6X6-48205-20		G	6X6:3000001-	○	＊	＊	*	＊	○
6X6-48207-00	16-1	B	6X6:0500001-	＊	○	＊	○	＊	＊
6X6-48207-10		D	6X6:1500001-	＊	○	＊	*	○	＊
6X6-48207-20		H	6X6:3500001-	＊	○	＊	*	＊	○
6X6-48208-20	17-1	F	6X6:2500001-	＊	＊	○	*	○	
6X6-48208-30		K	6X6:5000001-	＊	＊	○	＊		○

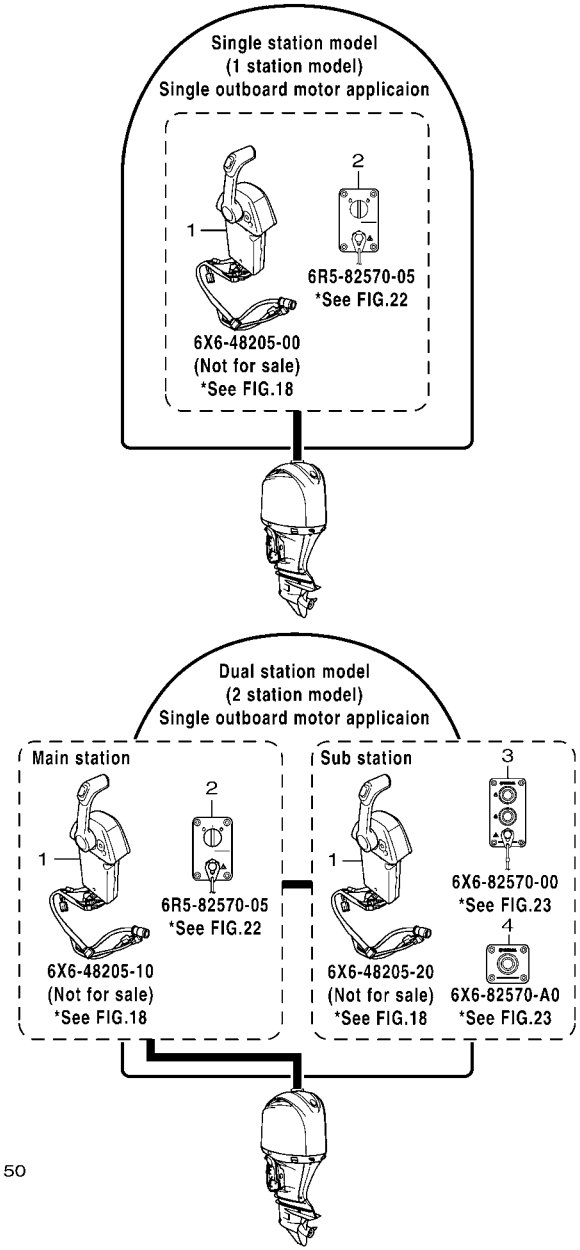

6011100-G150

FIG. 15 LAYOUT CHART 1 (SINGLE) DIAGRAMME 1 (SIMPLE)

REF. NO.	PART NO. N° PIECES	DESCRIPTION DESCRIPTION	2008					REMARKS REMARQUES
1	6X6–48205–00	REMOTE CONTROL ASSY (SINGLE) BOITIER DE COMMANDE A DISTANCE	1					NOT FOR SALE NOT FOR SALE
	6X6–48205–10	REMOTE CONTROL ASSY BOITIER DE COMMANDE A DISTANCE	1					NOT FOR SALE NOT FOR SALE
	6X6–48205–20	REMOTE CONTROL ASSY BOITIER DE COMMANDE A DISTANCE	1					NOT FOR SALE NOT FOR SALE
2	6R5–82570–05	PANEL SWITCH ASSY PLATINE D'INTERRUPEUR CPLT	1					1 & 2 STATION MAIN 1 & 2 STATION MAIN
3	6X6–82570–00	PANEL SWITCH ASSY (SINGLE) PLATINE D'INTERRUPEUR CPLT	1					2 STATION SUB 2 STATION SUB
4	6X6–82570–A0	PANEL SWITCH ASSY PLATINE D'INTERRUPEUR CPLT	2					2 STATION SUB 2 STATION SUB

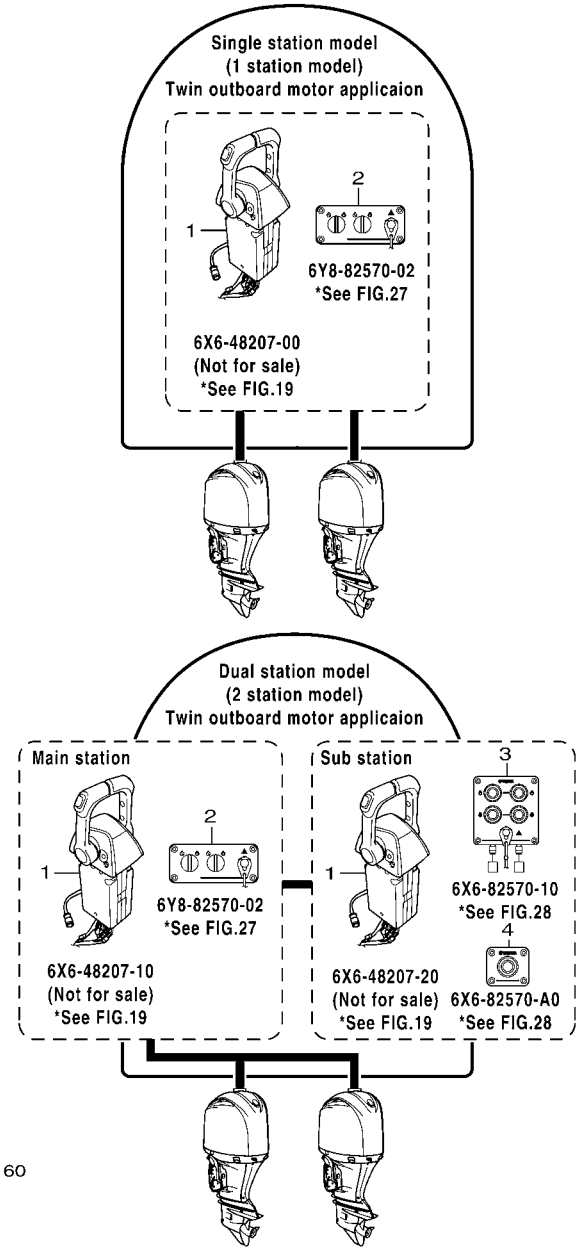

6011100-G160

FIG. 16 LAYOUT CHART 2 (TWIN) DIAGRAMME 2 (DOUBLE)

REF. NO.	PART NO. N° PIECES	DESCRIPTION DESCRIPTION	2008					REMARKS REMARQUES
1	6X6–48207–00	REMOTE CONTROL ASSY (TWIN) BOITIER DE COMMANDE A DISTANCE	1					NOT FOR SALE NOT FOR SALE
	6X6–48207–10	REMOTE CONTROL ASSY BOITIER DE COMMANDE A DISTANCE	1					NOT FOR SALE NOT FOR SALE
	6X6–48207–20	REMOTE CONTROL ASSY BOITIER DE COMMANDE A DISTANCE	1					NOT FOR SALE NOT FOR SALE
2	6Y8–82570–02	PANEL SW., TWIN PLATINE D'INTERRUPEUR CPLT	1					1 & 2 STATION MAIN 1 & 2 STATION MAIN
3	6X6–82570–10	PANEL SWITCH ASSY (TWIN) PLATINE D'INTERRUPEUR CPLT	1					2 STATION SUB 2 STATION SUB
4	6X6–82570–A0	PANEL SWITCH ASSY PLATINE D'INTERRUPEUR CPLT	2					2 STATION SUB 2 STATION SUB

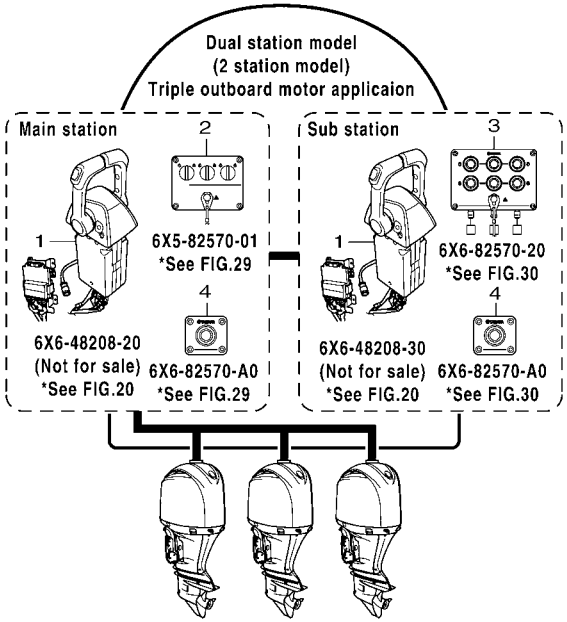

6011100-G170

FIG. 17 LAYOUT CHART 3 (TRIPLE) DIAGRAMME 3 (TROIS)

REF. NO.	PART NO. N° PIECES	DESCRIPTION DESCRIPTION	2008					REMARKS REMARQUES
1	6X6–48208–20	REMOTE CONTROL ASSY BOITIER DE COMMANDE A DISTANCE	1					NOT FOR SALE NOT FOR SALE
	6X6–48208–30	REMOTE CONTROL ASSY BOITIER DE COMMANDE A DISTANCE	1					NOT FOR SALE NOT FOR SALE
2	6X5–82570–01	PANEL SWITCH ASSY PLATINE D'INTERRUPEUR CPLT	1					2 STATION MAIN 2 STATION MAIN
3	6X6–82570–20	PANEL SWITCH ASSY PLATINE D'INTERRUPEUR CPLT	1					2 STATION SUB 2 STATION SUB
4	6X6–82570–A0	PANEL SWITCH ASSY PLATINE D'INTERRUPEUR CPLT	2					

6X6 REMOTE CONTROL (SINGLE)

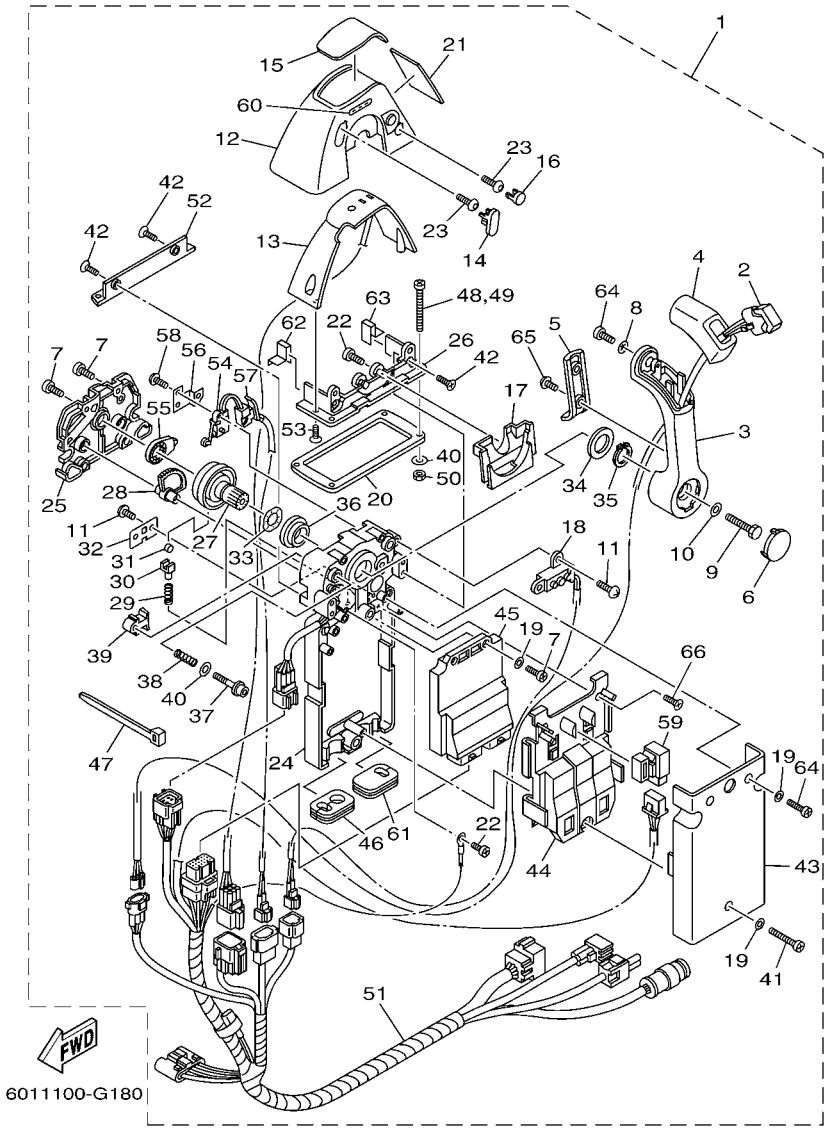

FIG. 18 DBW REMOTE CONTROL 1 (SINGLE) BOITIER COMMANDE 1 (SIMPLE)

REF. NO.	PART NO. N° PIECES	DESCRIPTION DESCRIPTION	2008					REMARKS REMARQUES
1	6X6–48205–00	REMOTE CONTROL ASSY (SINGLE) BOITIER DE COMMANDE A DISTANCE	1					NOT FOR SALE NOT FOR SALE
	6X6–48205–10	REMOTE CONTROL ASSY BOITIER DE COMMANDE A DISTANCE	1					NOT FOR SALE NOT FOR SALE
	6X6–48205–20	REMOTE CONTROL ASSY BOITIER DE COMMANDE A DISTANCE	1					NOT FOR SALE NOT FOR SALE
2	6X6–82563–00	.TRIM & TILT SWITCH ASSY .INCLINER ET PARER COMMUTATEUR	1					
3	6X6–48221–00	.LEVER, CONTROL .LEVIER, COMMANDE	1					
4	6X6–48222–00	.GRIP, CONTROL LEVER .POIGNEE, COMMANDE LEVIER	1					
5	6X6–48224–00	.COVER, CONTROL LEVER .COUVERCLE	1					
6	6X6–48224–10	.COVER, CONTROL LEVER .COUVERCLE	1					
7	98580–05014	.SCREW, PAN HEAD .VIS	6					
8	92990–05300	.WASHER, INTERNAL TOOTH .RONDELLE, DENTURE INTERNE	1					
9	6X6–48171–00	.BOLT .BOULON	1					
10	92990–08600	.WASHER, PLATE .RONDELLE, PLATE	1					
11	EL8–48127–00	.SCREW 1 .VIS 1	4					
12	6X6–48119–01	.COVER .COQUILLE	1					
13	6X6–84301–00	.PILOT LIGHT ASSY 1 .LAMPE-TEMOIN 1	1					
14	6X6–48167–00	.PLUG .BOUCHON	1					
15	6X6–48215–00	.GRAPHIC .ADHESIF	1					
16	6X6–48167–50	.PLUG .BOUCHON	1					
17	6X6–48219–00	.COVER, LEAD .COUVERCLE	1					
18	6X6–8259E–00	.SWITCH ASSY .COMMUTATEUR COMPLET	1					
19	92990–05200	.WASHER, PLAIN .RONDELLE, PLATE	5					
20	6X6–48176–00	.GROMMET .PASSE-FIL	1					
21	6X6–48216–00	.GRAPHIC .ADHESIF 2 GAUCHE	1					
22	98580–04010	.SCREW, PAN HEAD .VIS	3					
23	92D80–05016	.BOLT, SOCKET HEAD .BOULON	2					
24	6X6–481A0–01	.REMO-CON. CASE ASSY .BOITIER ENS.	1					
25	6X6–48212–00	.BACK PLATE 1 .PLAQUETTE 1	1					

6X6 REMOTE CONTROL (SINGLE)

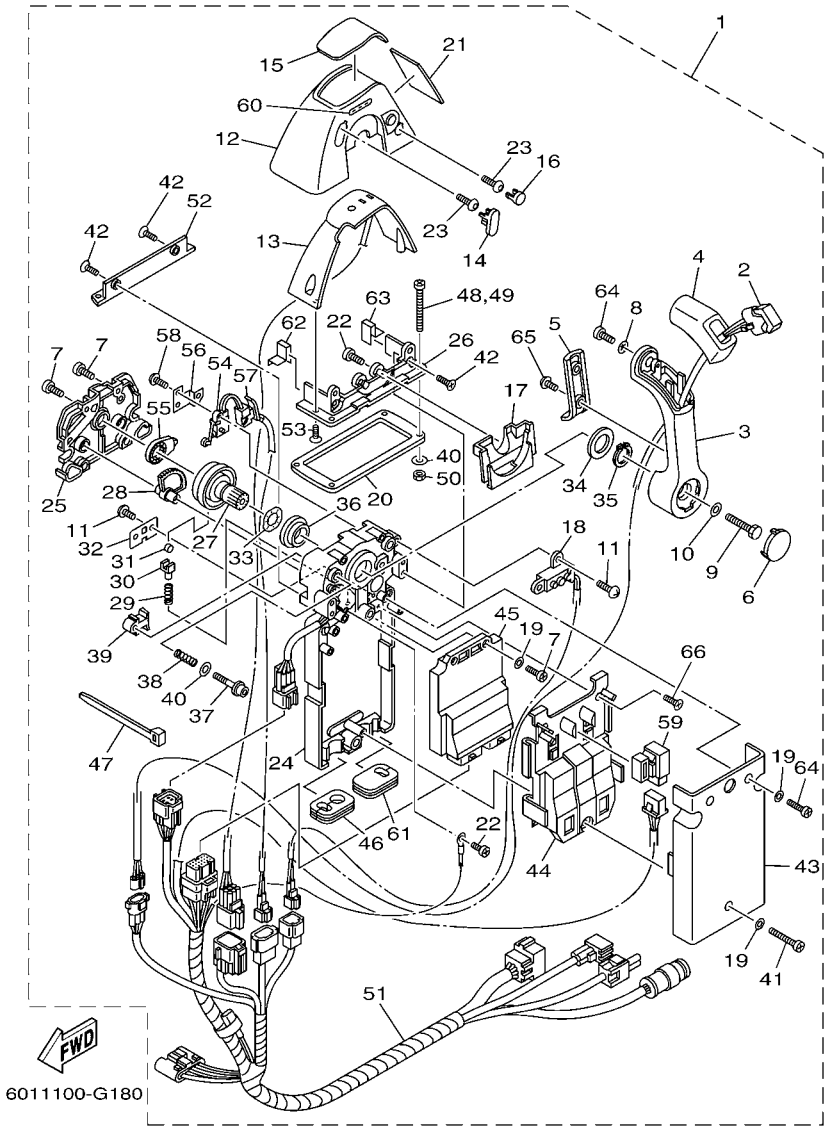

FIG. 18 DBW REMOTE CONTROL 1 (SINGLE) BOITIER COMMANDE 1 (SIMPLE)

REF. NO.	PART NO. N° PIECES	DESCRIPTION DESCRIPTION	2008					REMARKS REMARQUES
26	6X6–48144–10	.PLATE, STOPPER 2 .PLAQUETTE 2	1					
27	6X6–48242–01	.SHAFT, DRIVE .ARBRE, MOTEUR	1					
28	6X6–48233–01	.GEAR 2 .PIGNON 2	1					
29	6X6–48238–00	.SPRING, DETENT .RESSORT	1					
30	6X6–48237–00	.ADAPTOR .ADAPTEUR	1					
31	6X6–48236–00	.ROLLER, DETENT .POULIE	1					
32	6X6–48189–00	.RETAINER .FLASQUE	1					
33	703–48198–00	.WASHER, WAVE .RONDELLE, ELASTIQUE ONDULEE	1					
34	6X6–48193–00	.WASHER 3 .RONDELLE 3	1					
35	6X6–48118–00	.CLIP, SHIFT LEVER .ATTACHE, LEVIER DE CHANGER	1					
36	6X6–48234–00	.BUSHING 1 .POULIE	1					
37	6X6–48267–00	.BOLT SET .BOULON ENS.	1					
38	6X6–48158–00	.SPRING 1 .RESSORT 1	1					
39	6X6–48264–00	.FRICTION, THROTTLE .FRICTION, ACCELERATION	1					
40	704–48287–00	.WASHER .RONDELLE	5					
41	6X6–81145–00	.SCREW 1 .VIS 1	1					
42	98780–05014	.SCREW, FLAT HEAD .VIS A TETE FRAISEE	4					
43	6X6–48213–00	.BACK PLATE 2 .PLAQUETTE 2	1					
44	6X6–48228–00	.HOLDER, SWITCH .SUPPORT	1					
45	6X6–85590–10	.CONTROL UNIT ASSY .BLOC DE CONTROLE	1					1 STATION 1 STATION
	6X6–85590–00	.CONTROL UNIT ASSY .BLOC DE CONTROLE	1					2 STATION 2 STATION
46	6X6–48175–00	.BOOT .SOUFFLET	1					1 STATION 1 STATION
	6X6–48175–00	.BOOT .SOUFFLET	2					2 STATION 2 STATION
47	703–82591–00	.BAND .COLLIER	3					1 STATION 1 STATION
	703–82591–00	.BAND .COLLIER	4					2 STATION 2 STATION
48	97780–50145	.SCREW, TAPPING .VIS, TETE BOMBEE	4					
49	98580–05060	.SCREW, PAN HEAD .VIS	4					

6X6 REMOTE CONTROL (SINGLE)

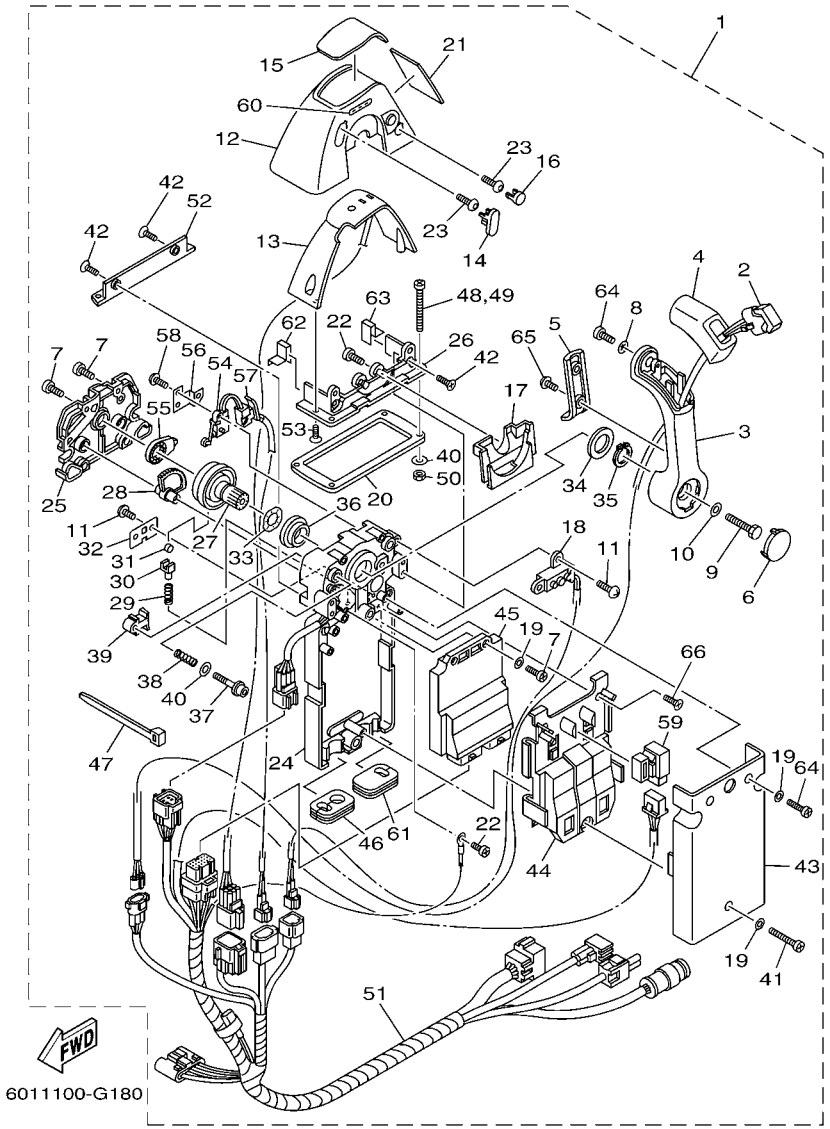

FIG. 18 DBW REMOTE CONTROL 1 (SINGLE) BOITIER COMMANDE 1 (SIMPLE)

REF. NO.	PART NO. N° PIECES	DESCRIPTION DESCRIPTION	2008					REMARKS REMARQUES
50	95380–05600	.NUT .ECROU	4					
51	6X6–82590–00	.WIRE HARNESS ASSY .FAISCEAU DE FILS COMPLET	1					1 STATION 1 STATION
	6X6–82590–20	.WIRE HARNESS ASSY .FAISCEAU DE FILS COMPLET	1					2 STATION MAIN 2 STATION MAIN
	6X6–82590–50	.WIRE HARNESS ASSY .FAISCEAU DE FILS COMPLET	1					2 STATION SUB 2 STATION SUB
52	6X6–48144–00	.PLATE, STOPPER 2 .PLAQUETTE 2	1					
53	6X6–48129–00	.SCREW 3 .VIS 3	2					
54	6X6–82540–00	.NEUTRAL SWITCH ASSY .CONTACTEUR DE POINT-MORT	1					
55	6X6–48241–00	.ARM, DRIVE .BRAS, COMMANDE	1					
56	6X6–48245–01	.PLATE, LOCK .PLAQUE, VERROU	1					
57	6X6–82545–00	.GROMMET .PASSE-FIL	1					
58	6X6–8252V–00	.SCREW, SPECIAL .VIS, SPECIALE	2					
59	704–81950–10	.RELAY ASSY .RELAIS COMPLET	1					
60	6X6–44191–00	.INDICATOR, SHIFT .ETIQUETTE, EMBRAYAGE	1					
61	6X6–48175–10	.BOOT .SOUFFLET	1					1 STATION ONLY 1 STATION ONLY
62	6X6–48176–50	.GROMMET .PASSE-FIL	1					
63	6X6–48176–60	.GROMMET .PASSE-FIL	1					
64	6X6–48127–00	.SCREW 1 .VIS 1	3					
65	6X6–48128–00	.SCREW 2 .VIS 2	2					
66	6X6–81146–00	.SCREW 2 .VIS 2	2					

FIG. 19 DBW REMOTE CONTROL 2 (TWIN) BOITIER COMMANDE 2 (DOUBLE)

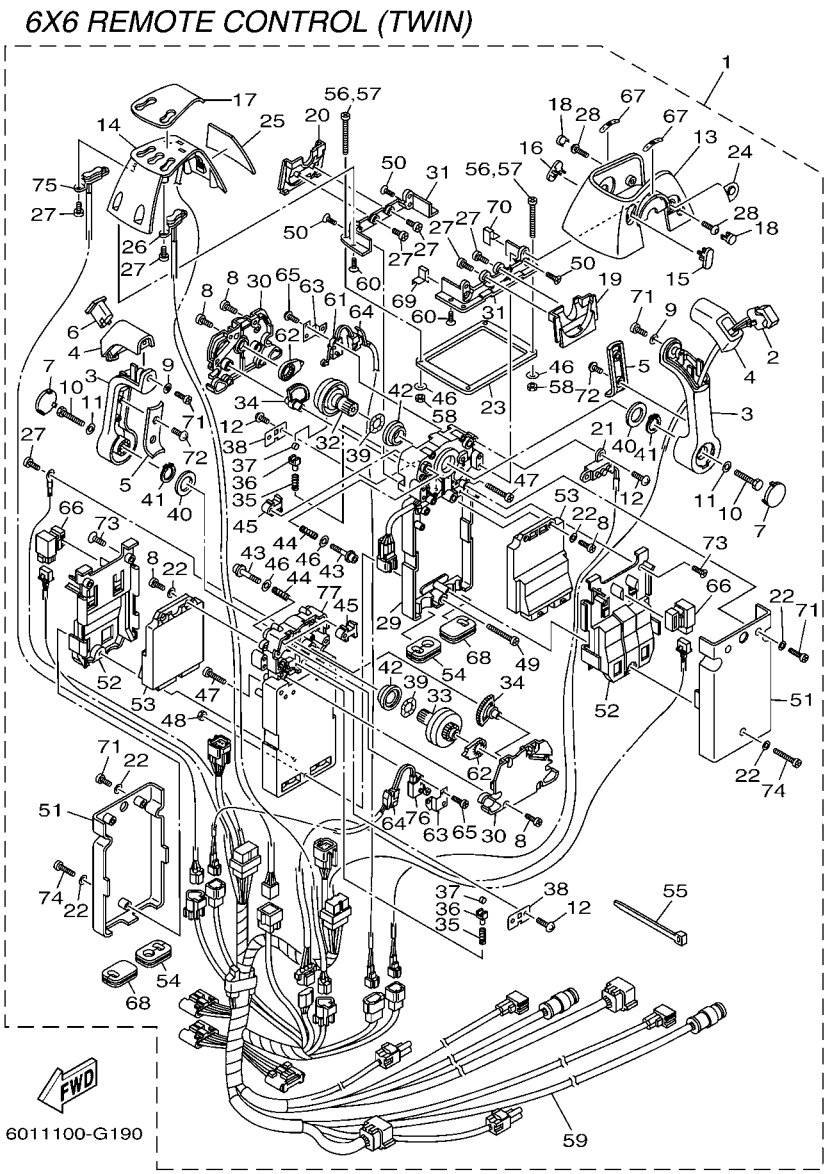

REF. NO.	PART NO. N° PIECES	DESCRIPTION DESCRIPTION	2008					REMARKS REMARQUES
1	6X6–48207–00	REMOTE CONTROL ASSY (TWIN) BOITIER DE COMMANDE A DISTANCE	1					NOT FOR SALE NOT FOR SALE
	6X6–48207–10	REMOTE CONTROL ASSY BOITIER DE COMMANDE A DISTANCE	1					NOT FOR SALE NOT FOR SALE
	6X6–48207–20	REMOTE CONTROL ASSY BOITIER DE COMMANDE A DISTANCE	1					NOT FOR SALE NOT FOR SALE
2	6X6–82563–00	.TRIM & TILT SWITCH ASSY .INCLINER ET PARER COMMUTATEUR	1					
3	6X6–48221–00	.LEVER, CONTROL .LEVIER, COMMANDE	2					
4	6X6–48222–00	.GRIP, CONTROL LEVER .POIGNEE, COMMANDE LEVIER	2					
5	6X6–48224–00	.COVER, CONTROL LEVER .COUVERCLE	2					
6	6X6–48222–10	.GRIP, CONTROL LEVER .POIGNEE, COMMANDE LEVIER	1					
7	6X6–48224–10	.COVER, CONTROL LEVER .COUVERCLE	2					
8	98580–05014	.SCREW, PAN HEAD .VIS	12					
9	92990–05300	.WASHER, INTERNAL TOOTH .RONDELLE, DENTURE INTERNE	2					
10	6X6–48171–00	.BOLT .BOULON	2					
11	92990–08600	.WASHER, PLATE .RONDELLE, PLATE	2					
12	EL8–48127–00	.SCREW 1 .VIS 1	6					
13	6X6–48119–10	.COVER .COQUILLE	1					
14	6X6–84301–10	.PILOT LIGHT ASSY 1 .LAMPE-TEMOIN 1	1					
15	6X6–48167–10	.PLUG .BOUCHON	1					
16	6X6–48167–20	.PLUG .BOUCHON	1					
17	6X6–48215–10	.GRAPHIC .ADHESIF	1					
18	6X6–48167–60	.PLUG .BOUCHON	2					
19	6X6–48219–10	.COVER, LEAD .COUVERCLE	1					
20	6X6–48219–20	.COVER, LEAD .COUVERCLE	1					
21	6X6–8259E–00	.SWITCH ASSY .COMMUTATEUR COMPLET	1					
22	92990–05200	.WASHER, PLAIN .RONDELLE, PLATE	10					
23	6X6–48176–10	.GROMMET .PASSE-FIL	1					
24	6X6–48225–00	.COVER .COUVERCLE	1					
25	6X6–48216–10	.GRAPHIC .ADHESIF 2 GAUCHE	1					

FIG. 19 DBW REMOTE CONTROL 2 (TWIN) BOITIER COMMANDE 2 (DOUBLE)

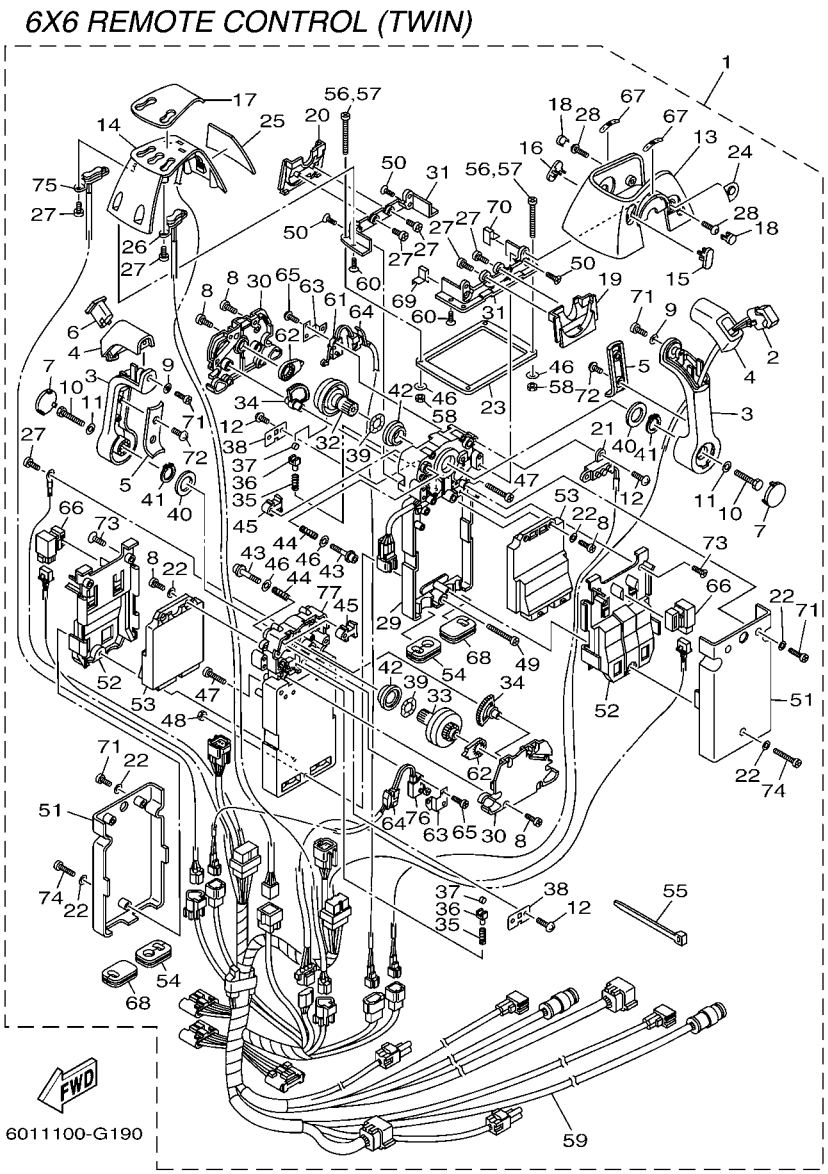

REF. NO.	PART NO. N° PIECES	DESCRIPTION DESCRIPTION	2008					REMARKS REMARQUES
26	6X6–82563–10	.TRIM & TILT SWITCH ASSY .INCLINER ET PARER COMMUTATEUR	1					
27	98580–04010	.SCREW, PAN HEAD .VIS	9					
28	92D80–05016	.BOLT, SOCKET HEAD .BOULON	2					
29	6X6–481A0–01	.REMO-CON. CASE ASSY .BOITIER ENS.	1					
30	6X6–48212–00	.BACK PLATE 1 .PLAQUETTE 1	2					
31	6X6–48144–10	.PLATE, STOPPER 2 .PLAQUETTE 2	2					
32	6X6–48242–01	.SHAFT, DRIVE .ARBRE, MOTEUR	1					
33	6X6–48242–11	.SHAFT, DRIVE .ARBRE, MOTEUR	1					
34	6X6–48233–01	.GEAR 2 .PIGNON 2	2					
35	6X6–48238–00	.SPRING, DETENT .RESSORT	2					
36	6X6–48237–00	.ADAPTOR .ADAPTEUR	2					
37	6X6–48236–00	.ROLLER, DETENT .POULIE	2					
38	6X6–48189–00	.RETAINER .FLASQUE	2					
39	703–48198–00	.WASHER, WAVE .RONDELLE, ELASTIQUE ONDULEE	2					
40	6X6–48193–00	.WASHER 3 .RONDELLE 3	2					
41	6X6–48118–00	.CLIP, SHIFT LEVER .ATTACHE, LEVIER DE CHANGER	2					
42	6X6–48234–00	.BUSHING 1 .POULIE	2					
43	6X6–48267–00	.BOLT SET .BOULON ENS.	2					
44	6X6–48158–00	.SPRING 1 .RESSORT 1	2					
45	6X6–48264–00	.FRICTION, THROTTLE .FRICTION, ACCELERATION	2					
46	704–48287–00	.WASHER .RONDELLE	6					
47	98580–05025	.SCREW, PAN HEAD .VIS	2					
48	704–48156–00	.NUT 1 .ECROU 1	1					
49	704–48283–00	.SCREW .VIS	1					
50	98780–05014	.SCREW, FLAT HEAD .VIS A TETE FRAISEE	4					
51	6X6–48213–00	.BACK PLATE 2 .PLAQUETTE 2	2					
52	6X6–48228–00	.HOLDER, SWITCH .SUPPORT	2					

6X6 REMOTE CONTROL (TWIN)

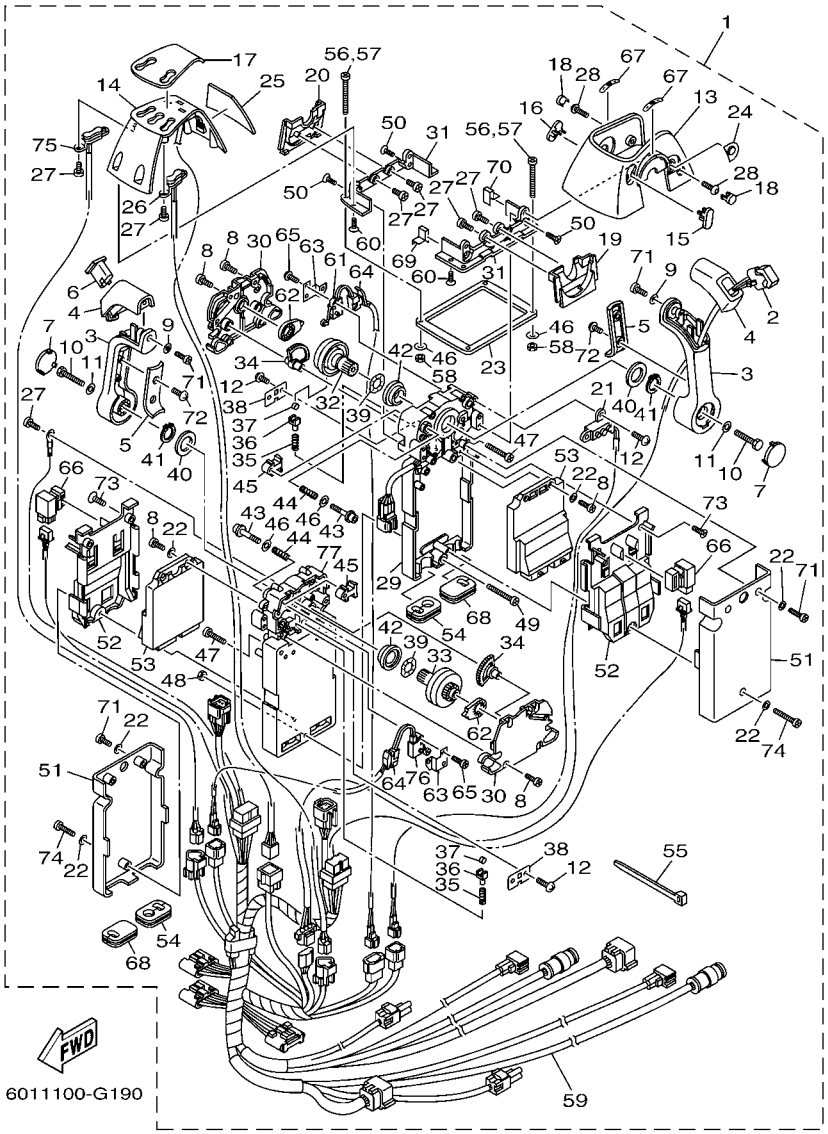

FIG. 19 DBW REMOTE CONTROL 2 (TWIN) BOITIER COMMANDE 2 (DOUBLE)

REF. NO.	PART NO. N° PIECES	DESCRIPTION DESCRIPTION	2008					REMARKS REMARQUES
53	6X6–85590–10	.CONTROL UNIT ASSY .BLOC DE CONTROLE	2					1 STATION 1 STATION
	6X6–85590–00	.CONTROL UNIT ASSY .BLOC DE CONTROLE	2					2 STATION 2 STATION
54	6X6–48175–00	.BOOT .SOUFFLET	2					1 STATION 1 STATION
	6X6–48175–00	.BOOT .SOUFFLET	4					2 STATION 2 STATION
55	703–82591–00	.BAND .COLLIER	6					1 STATION 1 STATION
	703–82591–00	.BAND .COLLIER	8					2 STATION 2 STATION
56	97780–50145	.SCREW, TAPPING .VIS, TETE BOMBEE	4					
57	98580–05060	.SCREW, PAN HEAD .VIS	4					
58	95380–05600	.NUT .ECROU	4					
59	6X6–82590–10	.WIRE HARNESS ASSY .FAISCEAU DE FILS COMPLET	1					1 STATION 1 STATION
	6X6–82590–30	.WIRE HARNESS ASSY .FAISCEAU DE FILS COMPLET	1					2 STATION MAIN 2 STATION MAIN
	6X6–82590–60	.WIRE HARNESS ASSY .FAISCEAU DE FILS COMPLET	1					2 STATION SUB 2 STATION SUB
60	6X6–48129–00	.SCREW 3 .VIS 3	4					
61	6X6–82540–00	.NEUTRAL SWITCH ASSY .CONTACTEUR DE POINT-MORT	1					
62	6X6–48241–00	.ARM, DRIVE .BRAS, COMMANDE	2					
63	6X6–48245–01	.PLATE, LOCK .PLAQUE, VERROU	2					
64	6X6–82545–00	.GROMMET .PASSE-FIL	2					
65	6X6–8252V–00	.SCREW, SPECIAL .VIS, SPECIALE	4					
66	704–81950–10	.RELAY ASSY .RELAIS COMPLET	2					
67	6X6–44191–00	.INDICATOR, SHIFT .ETIQUETTE, EMBRAYAGE	2					
68	6X6–48175–10	.BOOT .SOUFFLET	2					1 STATION ONLY 1 STATION ONLY
69	6X6–48176–50	.GROMMET .PASSE-FIL	1					
70	6X6–48176–60	.GROMMET .PASSE-FIL	1					
71	6X6–48127–00	.SCREW 1 .VIS 1	6					
72	6X6–48128–00	.SCREW 2 .VIS 2	4					
73	6X6–81146–00	.SCREW 2 .VIS 2	4					
74	6X6–81145–00	.SCREW 1 .VIS 1	2					

FIG. 19 DBW REMOTE CONTROL 2 (TWIN) BOITIER COMMANDE 2 (DOUBLE)

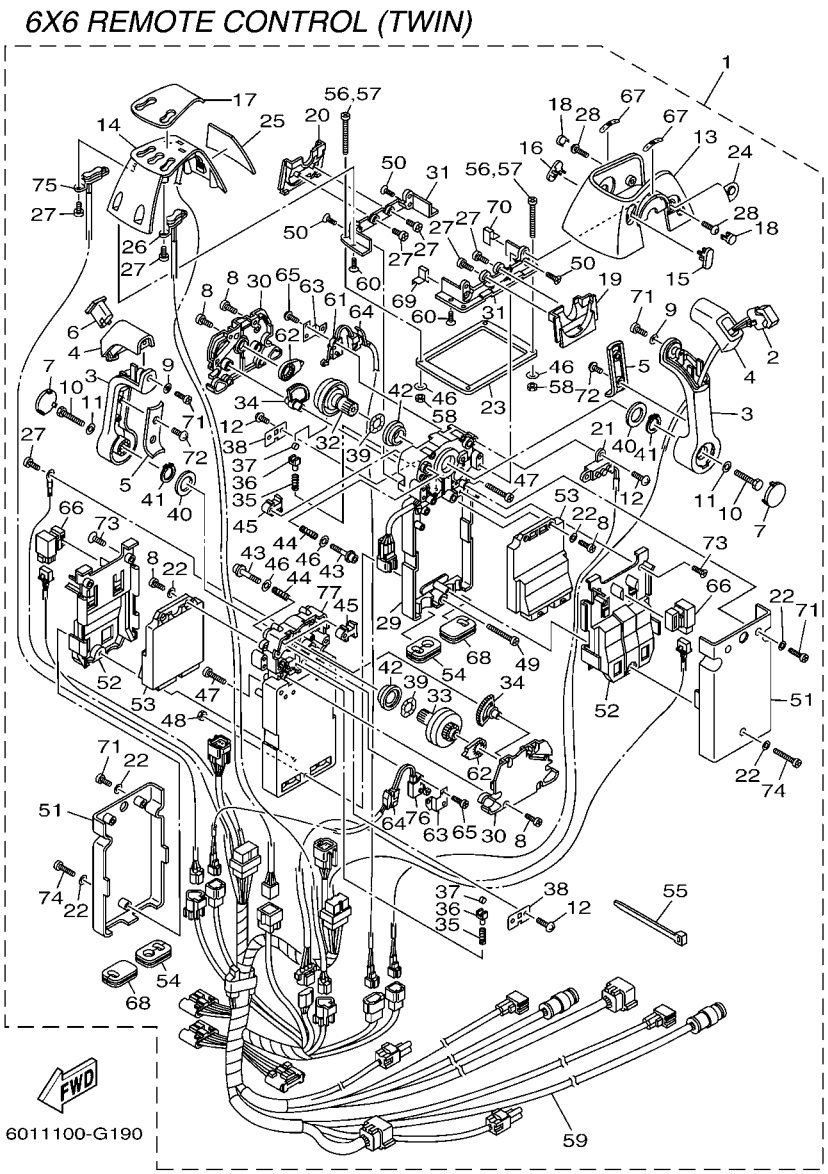

REF. NO.	PART NO. N° PIECES	DESCRIPTION DESCRIPTION	2008					REMARKS REMARQUES
75	6X6–82563–20	.TRIM & TILT SWITCH ASSY .INCLINER ET PARER COMMUTATEUR	1					
76	6X6–82540–10	.NEUTRAL SWITCH ASSY .CONTACTEUR DE POINT-MORT	1					
77	6X6–481A0–21	.REMO-CON. CASE ASSY .BOITIER ENS.	1					

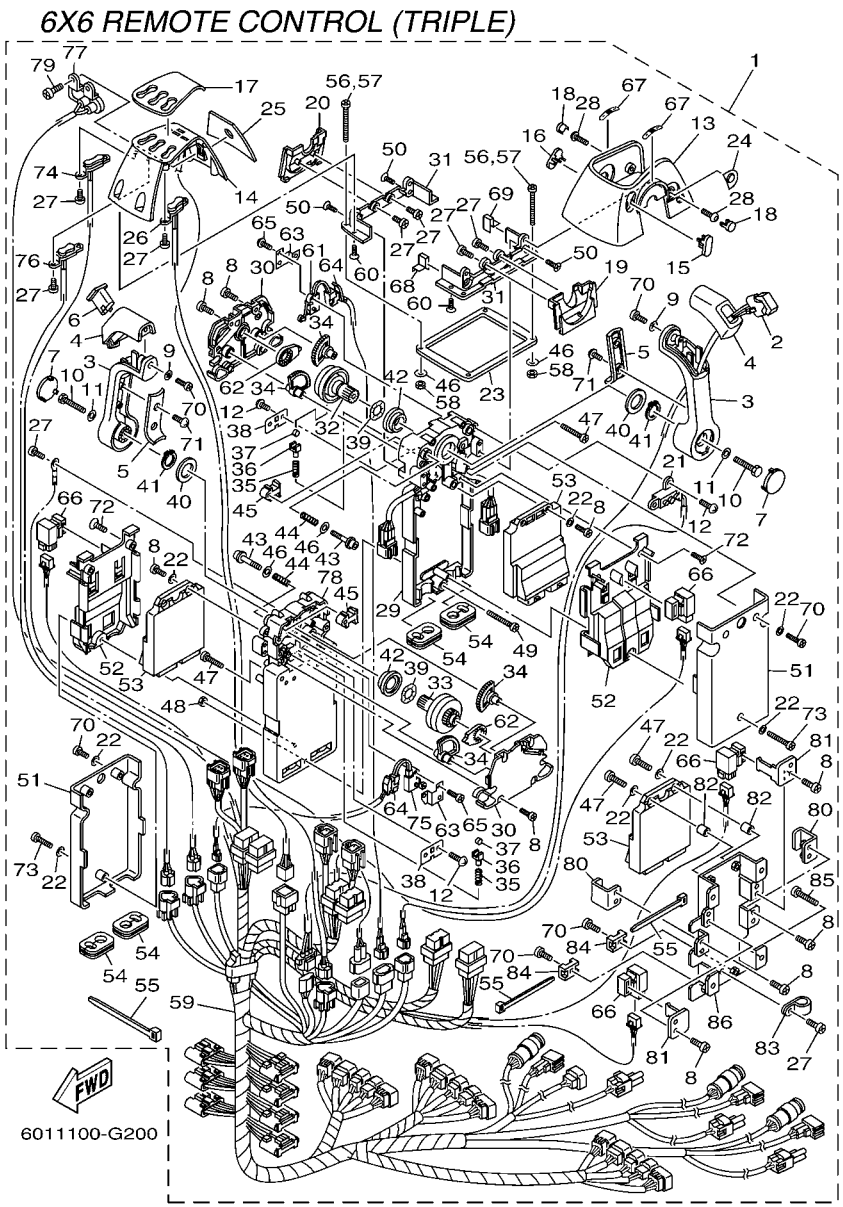

FIG. 20 DBW REMOTE CONTROL 3 (TRIPLE) BOITIER COMMANDE 3 (TROIS)

REF. NO.	PART NO. N° PIECES	DESCRIPTION DESCRIPTION	2008					REMARKS REMARQUES
1	6X6–48208–20	REMOTE CONTROL ASSY BOITIER DE COMMANDE A DISTANCE	1					NOT FOR SALE NOT FOR SALE
	6X6–48208–30	REMOTE CONTROL ASSY BOITIER DE COMMANDE A DISTANCE	1					NOT FOR SALE NOT FOR SALE
2	6X6–82563–00	.TRIM & TILT SWITCH ASSY .INCLINER ET PARER COMMUTATEUR	1					
3	6X6–48221–00	.LEVER, CONTROL .LEVIER, COMMANDE	2					
4	6X6–48222–00	.GRIP, CONTROL LEVER .POIGNEE, COMMANDE LEVIER	2					
5	6X6–48224–00	.COVER, CONTROL LEVER .COUVERCLE	2					
6	6X6–48222–10	.GRIP, CONTROL LEVER .POIGNEE, COMMANDE LEVIER	1					
7	6X6–48224–10	.COVER, CONTROL LEVER .COUVERCLE	2					
8	98580–05014	.SCREW, PAN HEAD .VIS	20					
9	92990–05300	.WASHER, INTERNAL TOOTH .RONDELLE, DENTURE INTERNE	2					
10	6X6–48171–00	.BOLT .BOULON	2					
11	92990–08600	.WASHER, PLATE .RONDELLE, PLATE	2					
12	EL8–48127–00	.SCREW 1 .VIS 1	6					
13	6X6–48119–10	.COVER .COQUILLE	1					
14	6X6–84301–20	.PILOT LIGHT ASSY 1 .LAMPE-TEMOIN 1	1					
15	6X6–48167–10	.PLUG .BOUCHON	1					
16	6X6–48167–20	.PLUG .BOUCHON	1					
17	6X6–48215–20	.GRAPHIC .ADHESIF	1					
18	6X6–48167–60	.PLUG .BOUCHON	2					
19	6X6–48219–10	.COVER, LEAD .COUVERCLE	1					
20	6X6–48219–20	.COVER, LEAD .COUVERCLE	1					
21	6X6–8259E–00	.SWITCH ASSY .COMMUTATEUR COMPLET	1					
22	92990–05200	.WASHER, PLAIN .RONDELLE, PLATE	12					
23	6X6–48176–10	.GROMMET .PASSE-FIL	1					
24	6X6–48225–00	.COVER .COUVERCLE	1					
25	6X6–48216–20	.GRAPHIC .ADHESIF 2 GAUCHE	1					
26	6X6–82563–10	.TRIM & TILT SWITCH ASSY .INCLINER ET PARER COMMUTATEUR	1					

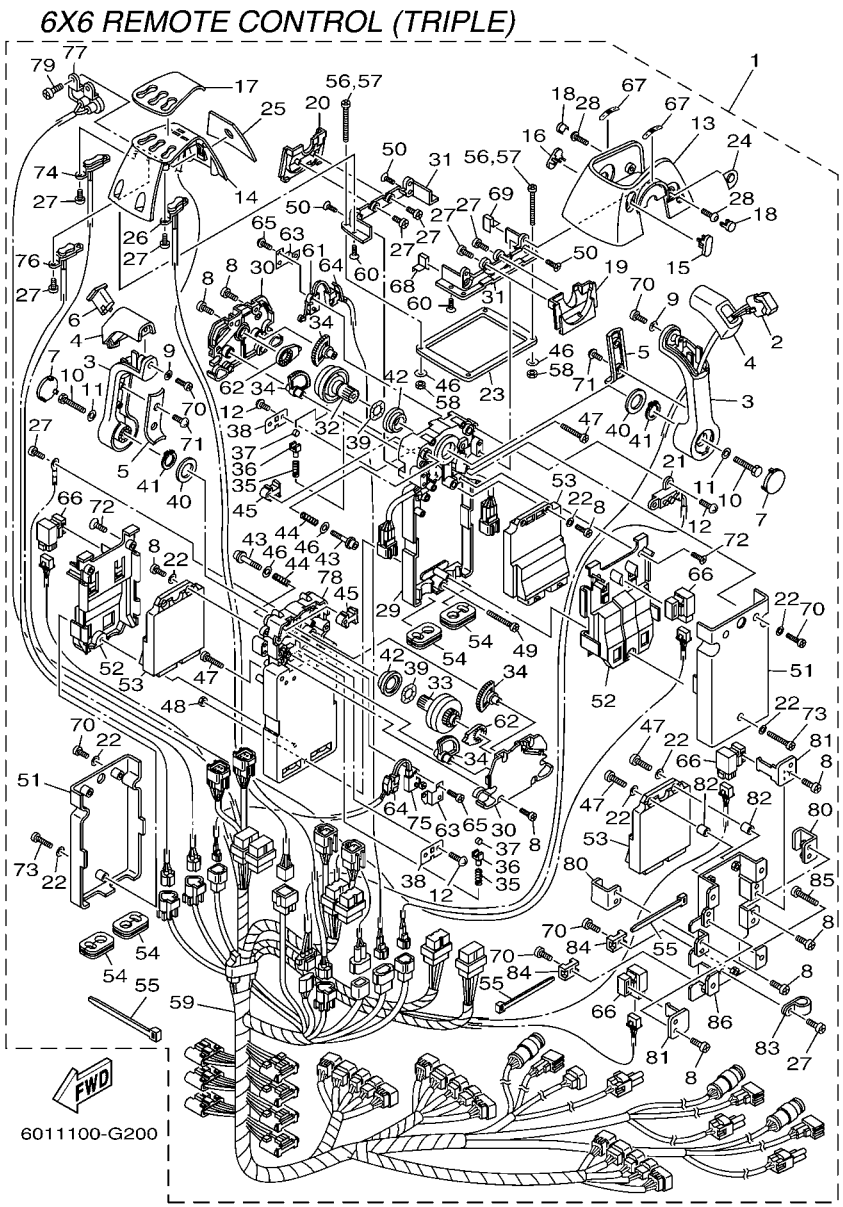

FIG. 20 DBW REMOTE CONTROL 3 (TRIPLE) BOITIER COMMANDE 3 (TROIS)

REF. NO.	PART NO. N° PIECES	DESCRIPTION DESCRIPTION	2008					REMARKS REMARQUES
27	98580–04010	.SCREW, PAN HEAD .VIS	12					
28	92D80–05016	.BOLT, SOCKET HEAD .BOULON	2					
29	6X6–481A0–11	.REMO-CON. CASE ASSY .BOITIER ENS.	1					
30	6X6–48212–00	.BACK PLATE 1 .PLAQUETTE 1	2					
31	6X6–48144–10	.PLATE, STOPPER 2 .PLAQUETTE 2	2					
32	6X6–48242–01	.SHAFT, DRIVE .ARBRE, MOTEUR	1					
33	6X6–48242–11	.SHAFT, DRIVE .ARBRE, MOTEUR	1					
34	6X6–48233–01	.GEAR 2 .PIGNON 2	4					
35	6X6–48238–00	.SPRING, DETENT .RESSORT	2					
36	6X6–48237–00	.ADAPTOR .ADAPTEUR	2					
37	6X6–48236–00	.ROLLER, DETENT .POULIE	2					
38	6X6–48189–00	.RETAINER .FLASQUE	2					
39	703–48198–00	.WASHER, WAVE .RONDELLE, ELASTIQUE ONDULEE	2					
40	6X6–48193–00	.WASHER 3 .RONDELLE 3	2					
41	6X6–48118–00	.CLIP, SHIFT LEVER .ATTACHE, LEVIER DE CHANGER	2					
42	6X6–48234–00	.BUSHING 1 .POULIE	2					
43	6X6–48267–00	.BOLT SET .BOULON ENS.	2					
44	6X6–48158–00	.SPRING 1 .RESSORT 1	2					
45	6X6–48264–00	.FRICTION, THROTTLE .FRICTION, ACCELERATION	2					
46	704–48287–00	.WASHER .RONDELLE	6					
47	98580–05025	.SCREW, PAN HEAD .VIS	4					
48	704–48156–00	.NUT 1 .ECROU 1	1					
49	704–48283–00	.SCREW .VIS	1					
50	98780–05014	.SCREW, FLAT HEAD .VIS A TETE FRAISEE	4					
51	6X6–48213–00	.BACK PLATE 2 .PLAQUETTE 2	2					
52	6X6–48228–00	.HOLDER, SWITCH .SUPPORT	2					
53	6X6–85590–00	.CONTROL UNIT ASSY .BLOC DE CONTROLE	3					

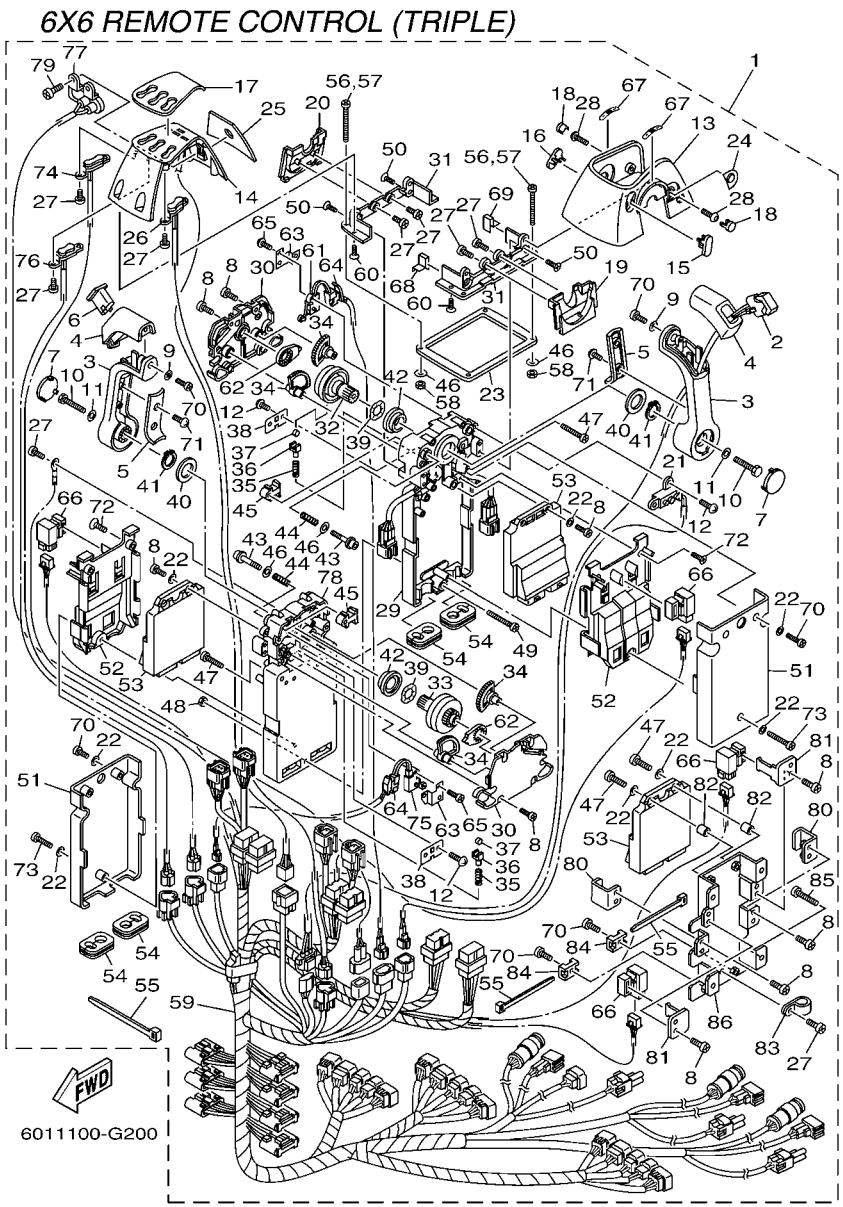

FIG. 20 DBW REMOTE CONTROL 3 (TRIPLE) BOITIER COMMANDE 3 (TROIS)

REF. NO.	PART NO. N° PIECES	DESCRIPTION DESCRIPTION	2008					REMARKS REMARQUES
54	6X6–48175–00	.BOOT .SOUFFLET	4					
55	703–82591–00	.BAND .COLLIER	10					
56	97780–50145	.SCREW, TAPPING .VIS, TETE BOMBEE	4					
57	98580–05060	.SCREW, PAN HEAD .VIS	4					
58	95380–05600	.NUT .ECROU	4					
59	6X6–82590–80	.WIRE HARNESS ASSY .FAISCEAU DE FILS COMPLET	1					2 STATION MAIN 2 STATION MAIN
	6X6–82590–90	.WIRE HARNESS ASSY .FAISCEAU DE FILS COMPLET	1					2 STATION SUB 2 STATION SUB
60	6X6–48129–00	.SCREW 3 .VIS 3	4					
61	6X6–82540–00	.NEUTRAL SWITCH ASSY .CONTACTEUR DE POINT-MORT	1					
62	6X6–48241–00	.ARM, DRIVE .BRAS, COMMANDE	2					
63	6X6–48245–01	.PLATE, LOCK .PLAQUE, VERROU	2					
64	6X6–82545–00	.GROMMET .PASSE-FIL	2					
65	6X6–8252V–00	.SCREW, SPECIAL .VIS, SPECIALE	4					
66	704–81950–10	.RELAY ASSY .RELAIS COMPLET	4					
67	6X6–44191–00	.INDICATOR, SHIFT .ETIQUETTE, EMBRAYAGE	2					
68	6X6–48176–50	.GROMMET .PASSE-FIL	1					
69	6X6–48176–60	.GROMMET .PASSE-FIL	1					
70	6X6–48127–00	.SCREW 1 .VIS 1	8					
71	6X6–48128–00	.SCREW 2 .VIS 2	4					
72	6X6–81146–00	.SCREW 2 .VIS 2	4					
73	6X6–81145–00	.SCREW 1 .VIS 1	2					
74	6X6–82563–20	.TRIM & TILT SWITCH ASSY .INCLINER ET PARER COMMUTATEUR	1					
75	6X6–82540–10	.NEUTRAL SWITCH ASSY .CONTACTEUR DE POINT-MORT	1					
76	6X6–82563–30	.TRIM & TILT SWITCH ASSY .INCLINER ET PARER COMMUTATEUR	1					
77	6X6–8259F–00	.SWITCH ASSY .COMMUTATEUR	1					
78	6X6–481A0–31	.REMO-CON. CASE ASSY .BOITIER ENS.	1					
79	98780–05010	.SCREW, FLAT HEAD .VIS A TETE FRAISEE	2					

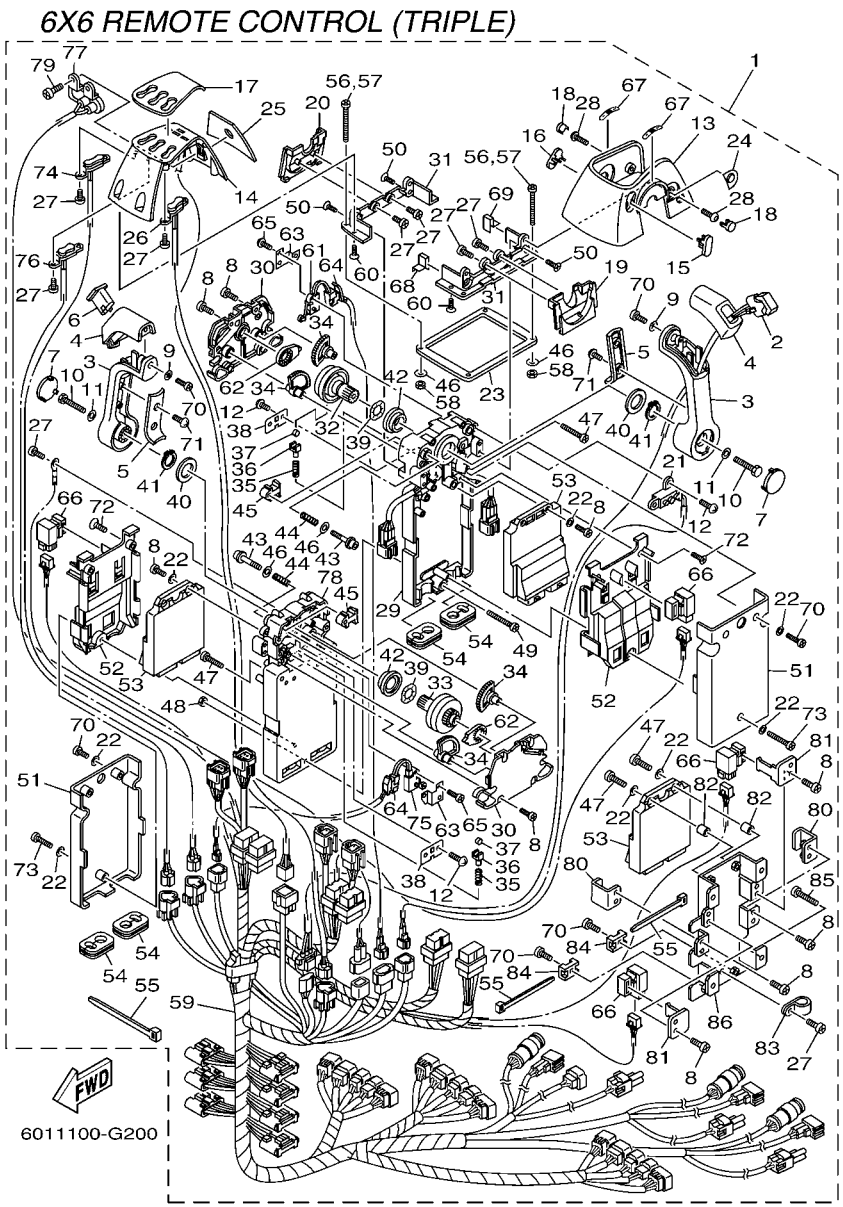

FIG. 20 DBW REMOTE CONTROL 3 (TRIPLE) BOITIER COMMANDE 3 (TROIS)

REF. NO.	PART NO. N° PIECES	DESCRIPTION DESCRIPTION	2008					REMARKS REMARQUES
80	6X6–85557–00	.HOLDER .SUPPORT	2					
81	6X6–82591–00	.BAND .COLLIER	2					
82	6X6–8252S–00	.SPACER, 1 .ENTRETOISE	2					
83	6X6–82584–00	.CLAMP .COLLIER	1					
84	6X6–82581–00	.STAY, CORD CLAMP .SUPPORT, COLLIER DE CORDON	2					
85	6X0–48128–00	.SCREW(M6X30) .VIS 2	4					
86	6X6–48211–10	.HOUSING,1 .CORPS	1					

FIG. 21 SWITCH & PANEL 1 — TABLEAU DE CONTACTEUR 1

SINGLE KEY SWITCH W/ PANEL

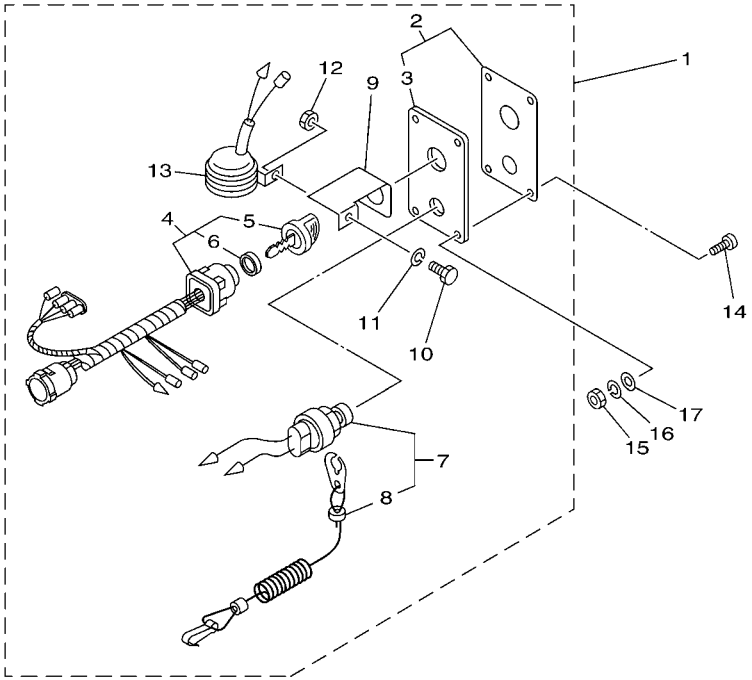

6011100-G210

REF. NO.	PART NO. N° PIECES	DESCRIPTION DESCRIPTION	2008					REMARKS REMARQUES
1	704–82570–08	PANEL SWITCH ASSY PLATINE D'INTERRUPEUR CPLT	1					WITH CHOKE SW. WITH CHOKE SW.
2	704–82571–02	.PANEL, SWITCH .TABLEAU, CONTACTEUR	1					
3	6R5–82588–01	..PLATE ..PLAQUE	1					
4	704–82510–07	.MAIN SWITCH ASSY .CONTACTEUR A CLEF COMPLET	1					
5	703–82577–00	..CAP, KEY ..CABOCHON	1					
6	6K1–82532–00	..CAP ..COUVERCLE	1					
7	688–82575–01	.ENGINE STOP SWITCH ASSY .COUPE CIRCUIT CPLT	1					
8	682–82556–00	..LANYARD, STOP SWITCH ..PLAQUETTE	1					
9	64D–82581–00	.STAY, CORD CLAMP .SUPPORT, COLLIER DE CORDON	1					
10	97303–05012	.BOLT .BOULON	1					
11	92903–05100	.WASHER, SPRING .RONDELLE, GROWER	1					
12	95303–05700	.NUT .ECROU	1					
13	688–83383–11	.BUZZER .RONFLEUR	1					
14	90149–05M05	SCREW VIS	4					
15	95380–05600	NUT ECROU	4					
16	92990–05100	WASHER, SPRING RONDELLE, GROWER	4					
17	92990–05600	WASHER, PLATE RONDELLE, PLATE	4					

FIG. 22 SWITCH & PANEL 2 TABLEAU DE CONTACTEUR 2

SINGLE KEY SWITCH W/ PANEL

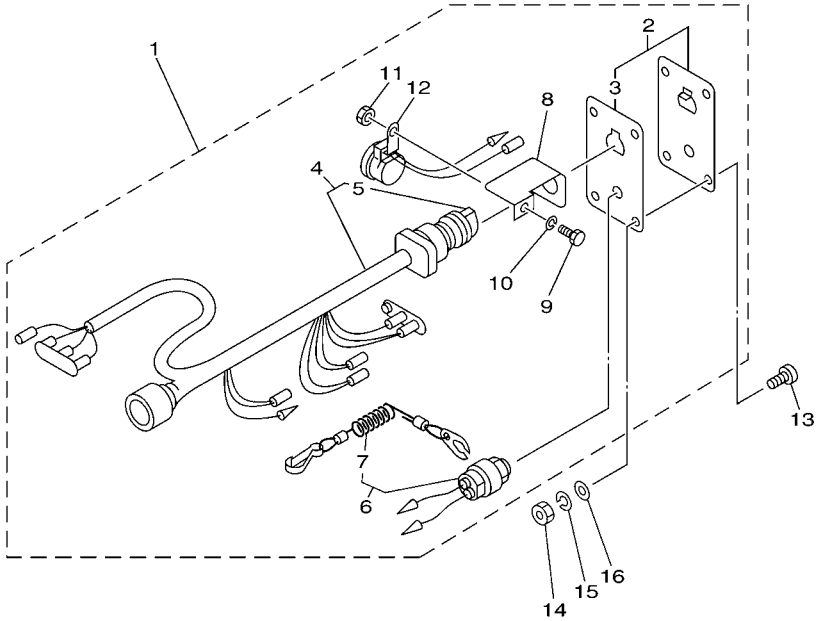

6011100-G220

REF. NO.	PART NO. N° PIECES	DESCRIPTION DESCRIPTION	2008					REMARKS REMARQUES
1	6R5–82570–05	PANEL SWITCH ASSY PLATINE D'INTERRUPEUR CPLT	1					WITH CHOKE SW. WITH CHOKE SW.
2	704–82571–02	.PANEL, SWITCH .TABLEAU, CONTACTEUR	1					
3	6R5–82588–01	..PLATE ..PLAQUE	1					
4	6R5–82510–02	.MAIN SWITCH ASSY .CONTACTEUR A CLEF COMPLET	1					
5	676–82577–00	..CAP, KEY ..CABOCHON	1					
6	688–82575–01	.ENGINE STOP SWITCH ASSY .COUPE CIRCUIT CPLT	1					
7	682–82556–00	..LANYARD, STOP SWITCH ..PLAQUETTE	1					
8	64D–82581–00	.STAY, CORD CLAMP .SUPPORT, COLLIER DE CORDON	1					
9	97303–05012	.BOLT .BOULON	1					
10	92903–05100	.WASHER, SPRING .RONDELLE, GROWER	1					
11	95303–05700	.NUT .ECROU	1					
12	6R5–83383–00	.BUZZER .RONFLEUR	1					
13	90149–05M05	SCREW VIS	4					
14	95303–05600	NUT ECROU	4					
15	92903–05100	WASHER, SPRING RONDELLE, GROWER	4					
16	92903–05600	WASHER, PLATE RONDELLE, PLATE	4					

FIG. 23 SWITCH & PANEL 3 — TABLEAU DE CONTACTEUR 3

SINGLE KEY SWITCH W/ PANEL
(FOR DBW REMOTE CONTROL)

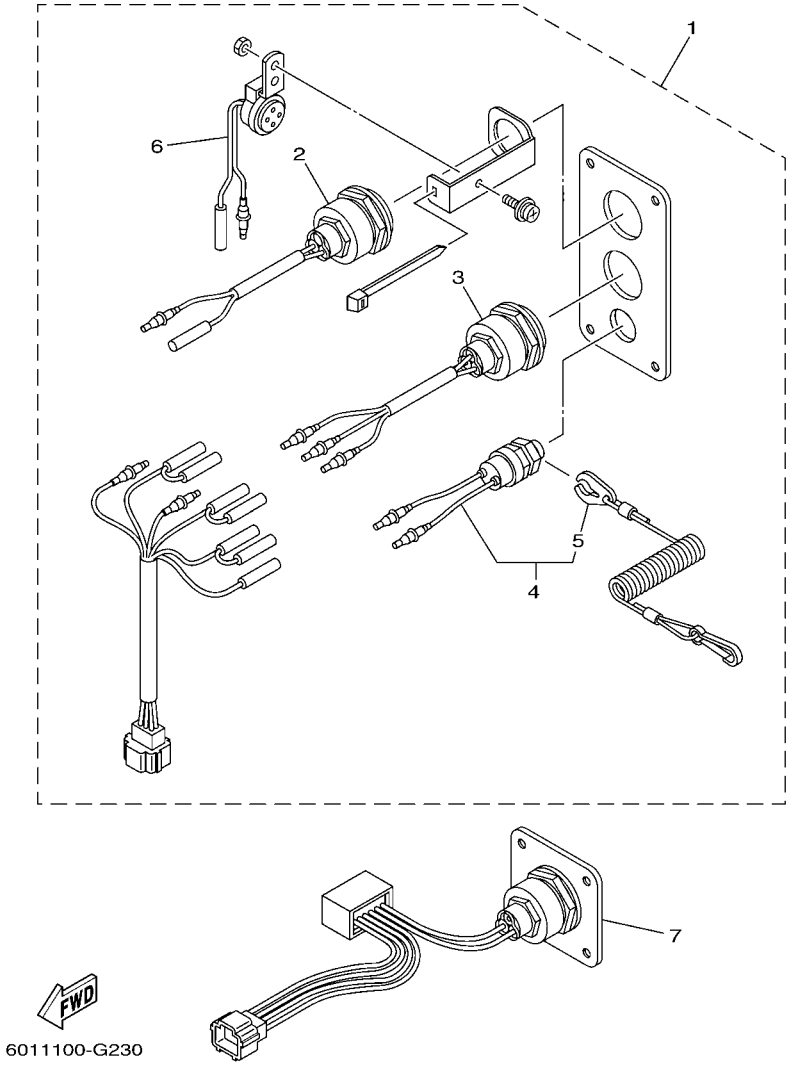

REF. NO.	PART NO. N° PIECES	DESCRIPTION DESCRIPTION	2008					REMARKS REMARQUES
1	6X6–82570–00	PANEL SWITCH ASSY (SINGLE) PLATINE D'INTERRUPEUR CPLT	1					2 STATION SUB 2 STATION SUB
2	6X1–81870–00	.STARTING SWITCH ASSY .CONTACT A CLEF	1					
3	6X1–82550–00	.ENGINE STOP SWITCH ASSY .COMMUTATEUR D'ARRET CPLT	1					
4	688–82575–01	.ENGINE STOP SWITCH ASSY .COUPE CIRCUIT CPLT	1					
5	682–82556–00	..LANYARD, STOP SWITCH ..PLAQUETTE	1					
6	6R5–83383–00	.BUZZER .RONFLEUR	1					
7	6X6–82570–A0	PANEL SWITCH ASSY PLATINE D'INTERRUPEUR CPLT	2					2 STATION SUB 2 STATION SUB

FIG. 24 SWITCH & PANEL 4 — TABLEAU DE CONTACTEUR 4

SINGLE KEY SWITCH W/O PANEL

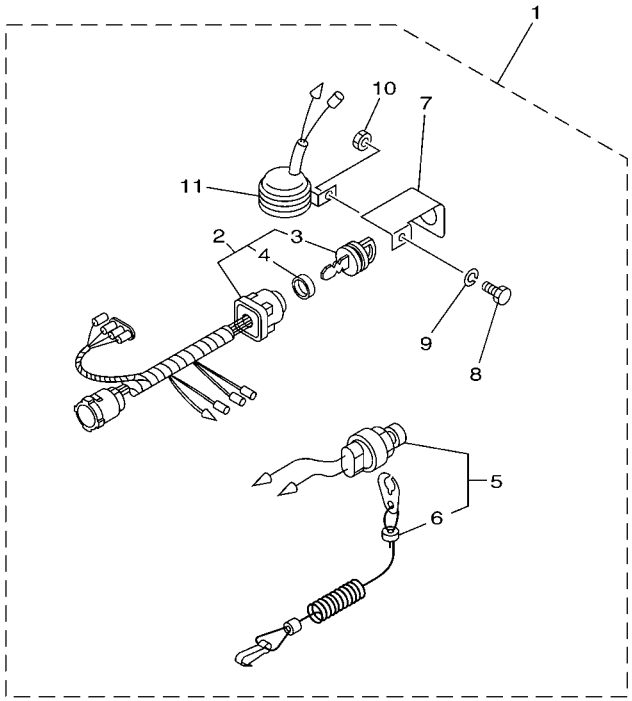

6011100-G240

REF. NO.	PART NO. N° PIECES	DESCRIPTION DESCRIPTION	2008					REMARKS REMARQUES
1	704–8257C–00	PANEL SWITCH COMP. 2 PLATINE D'INTERRUPEUR CPLT 2	1					WITH CHOKE SW. WITH CHOKE SW.
2	704–82510–07	.MAIN SWITCH ASSY .CONTACTEUR A CLEF COMPLET	1					
3	703–82577–00	..CAP, KEY ..CABOCHON	1					
4	6K1–82532–00	..CAP ..COUVERCLE	1					
5	688–82575–01	.ENGINE STOP SWITCH ASSY .COUPE CIRCUIT CPLT	1					
6	682–82556–00	..LANYARD, STOP SWITCH ..PLAQUETTE	1					
7	64D–82581–00	.STAY, CORD CLAMP .SUPPORT, COLLIER DE CORDON	1					
8	97303–05012	.BOLT .BOULON	1					
9	92903–05100	.WASHER, SPRING .RONDELLE, GROWER	1					
10	95303–05700	.NUT .ECROU	1					
11	688–83383–11	.BUZZER .RONFLEUR	1					

FIG. 25 SWITCH & PANEL 5 TABLEAU DE CONTACTEUR 5

TWIN KEY SWITCH

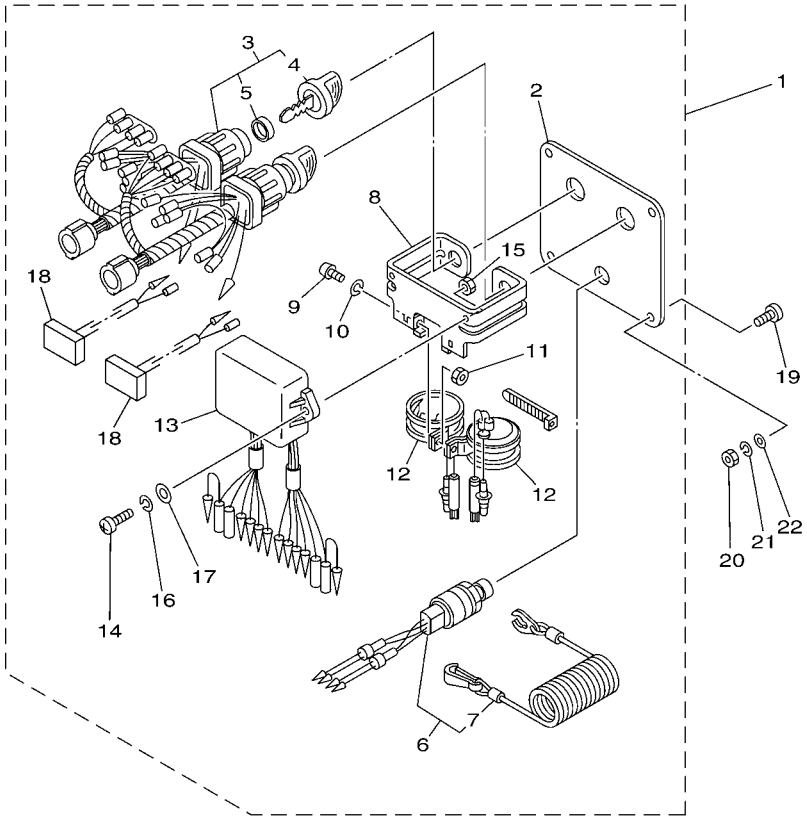

6011100-G250

REF. NO.	PART NO. N° PIECES	DESCRIPTION DESCRIPTION	2008					REMARKS REMARQUES
1	6K1–82570–08	PANEL SWITCH ASSY PLATINE D'INTERRUPEUR CPLT	1					WITH CHOKE SW. WITH CHOKE SW.
2	6K1–82571–02	.PLATE, PANEL SWITCH .TABLEAU, CONTACTEUR	1					
3	6K1–82510–06	.MAIN SWITCH ASSY .CONTACTEUR A CLEF COMPLET	2					
4	703–82577–00	..CAP, KEY ..CABOCHON	1					
5	6K1–82532–00	..CAP ..COUVERCLE	1					
6	6K1–82575–00	.ENGINE STOP SWITCH ASSY .COUPE CIRCUIT CPLT	1					
7	682–82556–00	..LANYARD, STOP SWITCH ..PLAQUETTE	1					
8	6K1–83614–01	.BRACKET .SUPPORT	1					
9	98980–05010	.SCREW, BIND .VIS, DE PRESSION	2					
10	92990–05100	.WASHER, SPRING .RONDELLE, GROWER	2					
11	95380–05600	.NUT .ECROU	2					
12	688–83383–11	.BUZZER .RONFLEUR	2					
13	6K1–85830–01	.CONTROL UNIT ASSY .BLOC DE CONTROLE	1					
14	98980–06020	.SCREW, BIND .VIS, DE PRESSION	2					
15	95380–06600	.NUT, HEXAGON .ECROU	2					
16	92990–06100	.WASHER, SPRING .RONDELLE, GROWER	2					
17	92990–06600	.WASHER, PLATE .RONDELLE, PLATE	2					
18	6K1–81980–00	.DIODE ASSY .REDRESSEUR 2	2					
19	90149–05M05	SCREW VIS	4					
20	95380–05600	NUT ECROU	4					
21	92990–05100	WASHER, SPRING RONDELLE, GROWER	4					
22	92990–05600	WASHER, PLATE RONDELLE, PLATE	4					

FIG. 26 SWITCH & PANEL 6 — TABLEAU DE CONTACTEUR 6

TWIN KEY SWITCH

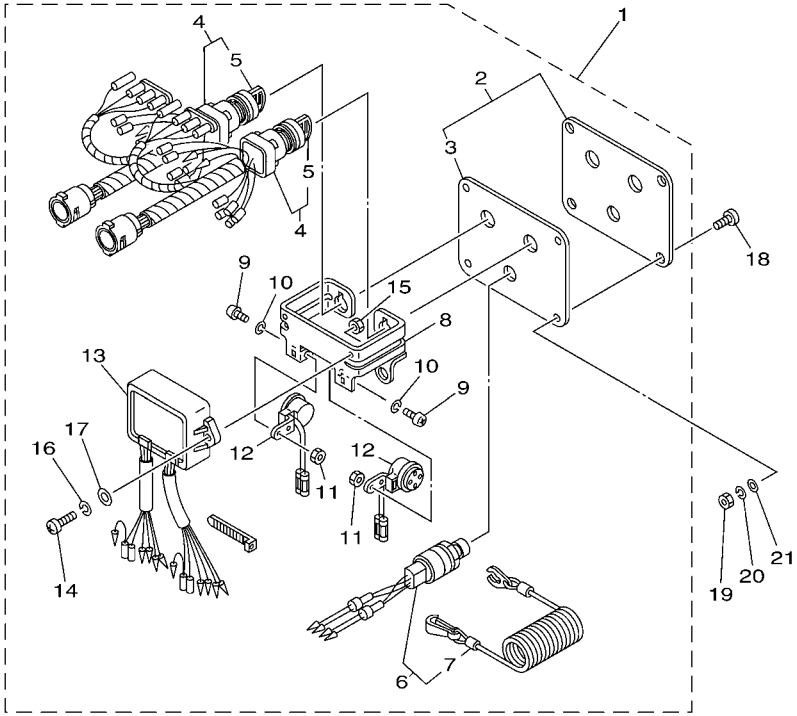

6011100-G260

REF. NO.	PART NO. N° PIECES	DESCRIPTION DESCRIPTION	2008					REMARKS REMARQUES
1	61B–82570–03	PANEL SWITCH ASSY PLATINE D'INTERRUPEUR CPLT	1					WITH CHOKE SW. WITH CHOKE SW.
2	6K1–82571–02	.PLATE, PANEL SWITCH .TABLEAU, CONTACTEUR	1					
3	61B–82588–01	..PLATE ..PLAQUE	1					
4	61B–82510–01	.MAIN SWITCH ASSY .CONTACTEUR A CLEF COMPLET	2					
5	676–82577–00	..CAP, KEY ..CABOCHON	1					
6	6K1–82575–00	.ENGINE STOP SWITCH ASSY .COUPE CIRCUIT CPLT	1					
7	682–82556–00	..LANYARD, STOP SWITCH ..PLAQUETTE	1					
8	6K1–83614–01	.BRACKET .SUPPORT	1					
9	98980–05010	.SCREW, BIND .VIS, DE PRESSION	2					
10	92990–05100	.WASHER, SPRING .RONDELLE, GROWER	2					
11	95380–05600	.NUT .ECROU	2					
12	6R5–83383–00	.BUZZER .RONFLEUR	2					
13	61B–85830–00	.CONTROL UNIT ASSY .BLOC DE CONTROLE	1					
14	98980–06020	.SCREW, BIND .VIS, DE PRESSION	2					
15	95380–06600	.NUT, HEXAGON .ECROU	2					
16	92990–06100	.WASHER, SPRING .RONDELLE, GROWER	2					
17	92990–06600	.WASHER, PLATE .RONDELLE, PLATE	2					
18	90149–05M05	SCREW VIS	4					
19	95380–05600	NUT ECROU	4					
20	92990–05100	WASHER, SPRING RONDELLE, GROWER	4					
21	92990–05600	WASHER, PLATE RONDELLE, PLATE	4					

FIG. 27 SWITCH & PANEL 7 — TABLEAU DE CONTACTEUR 7

TWIN KEY SWITCH
(FOR DIGITAL NETWORK GAUGE)

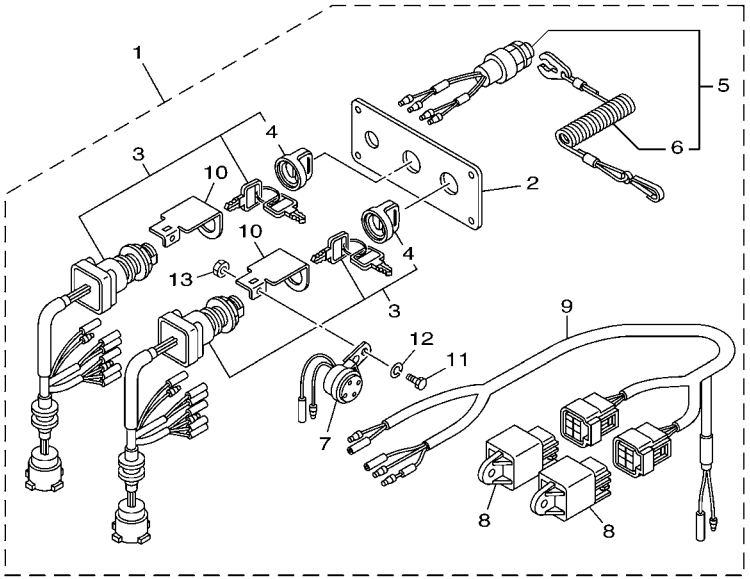

6011100-G270

REF. NO.	PART NO. N° PIECES	DESCRIPTION DESCRIPTION	2008					REMARKS REMARQUES
1	6Y8–82570–02	PANEL SW., TWIN PLATINE D'INTERRUPEUR CPLT	1					1 & 2 STATION MAIN 1 & 2 STATION MAIN
2	6Y8–82571–01	.PLATE, PANEL SWITCH .TABLEAU, CONTACTEUR	1					
3	6Y8–82510–02	.MAIN SWITCH ASSY .CONTACTEUR A CLEF COMPLET	2					
4	676–82577–00	..CAP, KEY ..CABOCHON	1					
5	6K1–82575–00	.ENGINE STOP SWITCH ASSY .COUPE CIRCUIT CPLT	1					
6	682–82556–00	..LANYARD, STOP SWITCH ..PLAQUETTE	1					
7	6R5–83383–00	.BUZZER .RONFLEUR	2					
8	68V–81950–00	.RELAY ASSY .RELAIS COMPLET	2					
9	6Y8–82507–00	.LEAD, IGNITION SWITCH RELAY .FIL	1					
10	64D–82581–00	.STAY, CORD CLAMP .SUPPORT, COLLIER DE CORDON	2					
11	97303–05012	.BOLT .BOULON	2					
12	92903–05100	.WASHER, SPRING .RONDELLE, GROWER	2					
13	95303–05700	.NUT .ECROU	2					

FIG. 28 SWITCH & PANEL 8 — TABLEAU DE CONTACTEUR 8

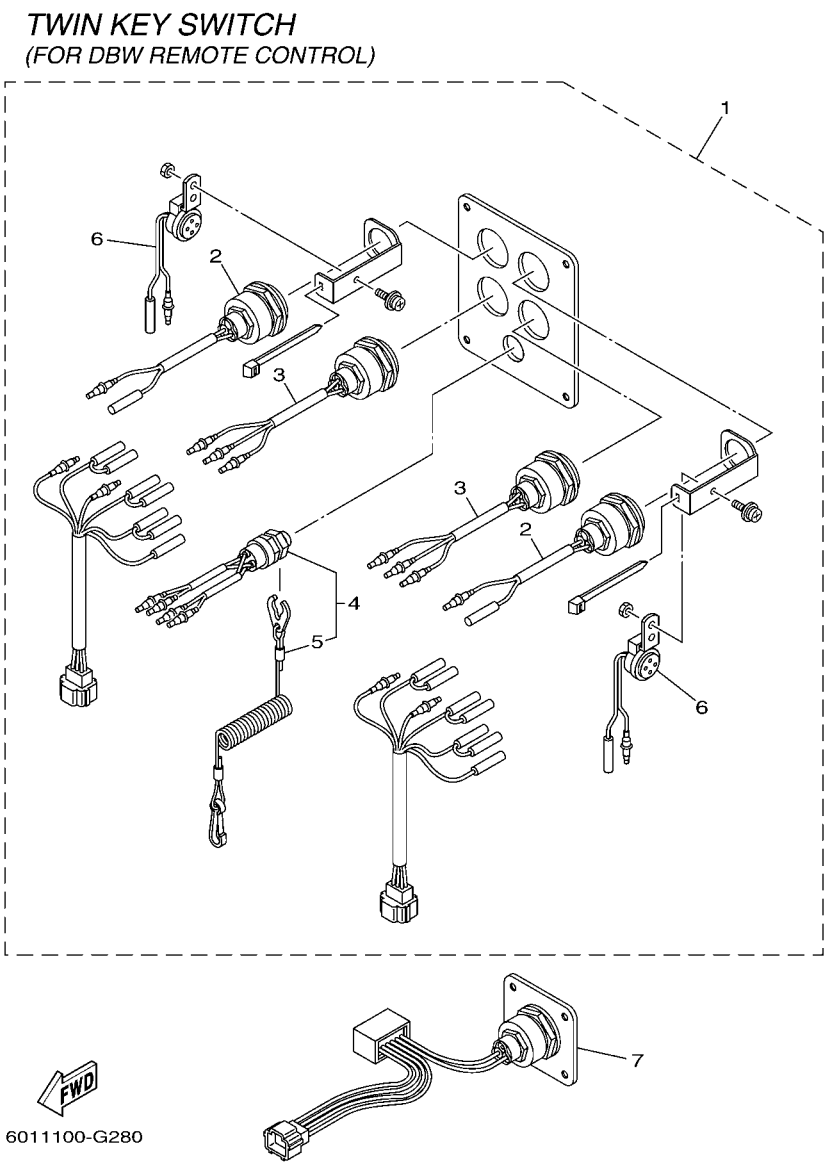

REF. NO.	PART NO. N° PIECES	DESCRIPTION DESCRIPTION	2008					REMARKS REMARQUES
1	6X6–82570–10	PANEL SWITCH ASSY (TWIN) PLATINE D'INTERRUPEUR CPLT	1					2 STATION SUB 2 STATION SUB
2	6X1–81870–00	.STARTING SWITCH ASSY .CONTACT A CLEF	2					
3	6X1–82550–00	.ENGINE STOP SWITCH ASSY .COMMUTATEUR D'ARRET CPLT	2					
4	6K1–82575–00	.ENGINE STOP SWITCH ASSY .COUPE CIRCUIT CPLT	1					
5	682–82556–00	..LANYARD, STOP SWITCH ..PLAQUETTE	1					
6	6R5–83383–00	.BUZZER .RONFLEUR	2					
7	6X6–82570–A0	PANEL SWITCH ASSY PLATINE D'INTERRUPEUR CPLT	2					2 STATION SUB 2 STATION SUB

FIG. 29 SWITCH & PANEL 9 — TABLEAU DE CONTACTEUR 9

TRIPLE KEY SWITCH
(FOR DIGITAL NETWORK GAUGE)

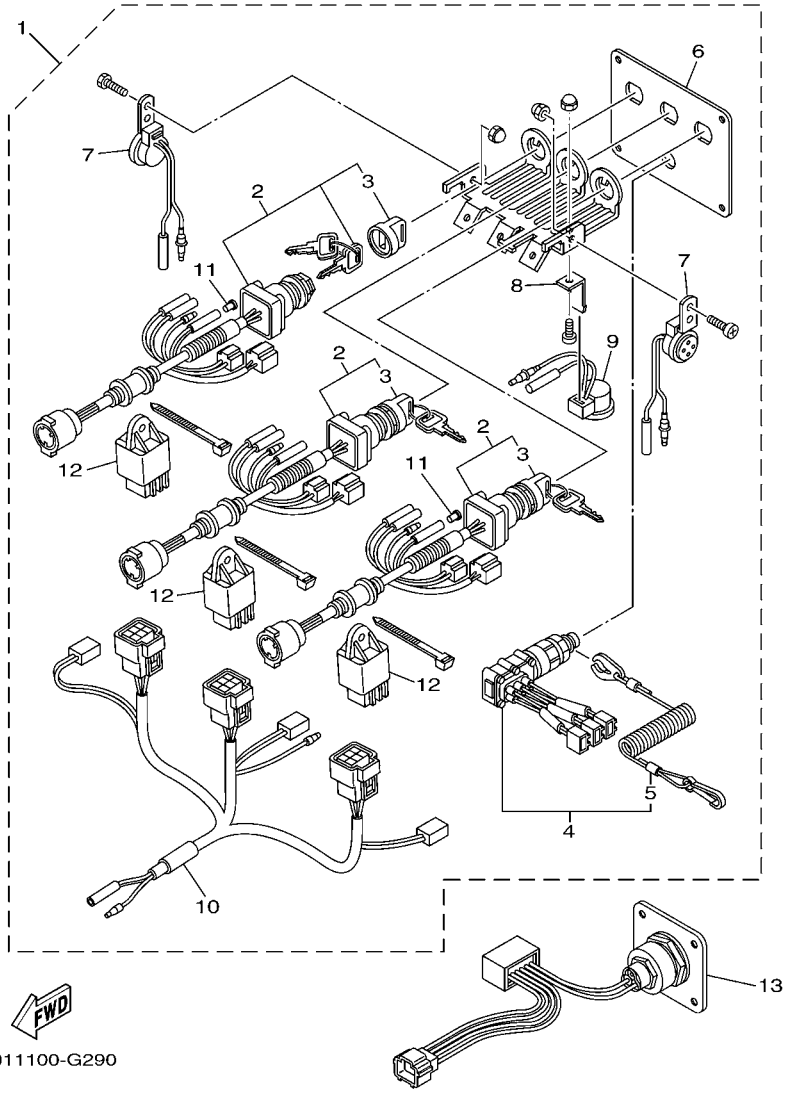

6011100-G290

REF. NO.	PART NO. N° PIECES	DESCRIPTION DESCRIPTION	2008					REMARKS REMARQUES
1	6X5–82570–01	PANEL SWITCH ASSY PLATINE D'INTERRUPEUR CPLT	1					2 STATION MAIN 2 STATION MAIN
2	6X5–82510–01	.MAIN SWITCH ASSY .CONTACTEUR A CLEF COMPLET	3					
3	676–82577–00	..CAP, KEY ..CABOCHON	1					
4	6X5–82575–00	.ENGINE STOP SWITCH ASSY .COUPE CIRCUIT CPLT	1					
5	682–82556–00	..LANYARD, STOP SWITCH ..PLAQUETTE	1					
6	6X5–82571–00	.PANEL, SWITCH .TABLEAU, CONTACTEUR	1					
7	6X5–83383–00	.BUZZER .RONFLEUR	2					
8	6X5–82581–00	.STAY, CORD CLAMP .SUPPORT, COLLIER DE CORDON	1					
9	6X4–83383–00	.BUZZER .RONFLEUR	1					
10	6X5–82507–00	.WIRE, LEAD .FIL	1					
11	703–82119–00	.COVER, LEAD WIRE .GARNITURE, FIL	5					
12	68V–81950–00	.RELAY ASSY .RELAIS COMPLET	3					
13	6X6–82570–A0	PANEL SWITCH ASSY PLATINE D'INTERRUPEUR CPLT	1					2 STATION MAIN 2 STATION MAIN

FIG. 30 SWITCH & PANEL 10 — TABLEAU DE CONTACTEUR 10

TRIPLE KEY SWITCH
(FOR DBW REMOTE CONTROL)

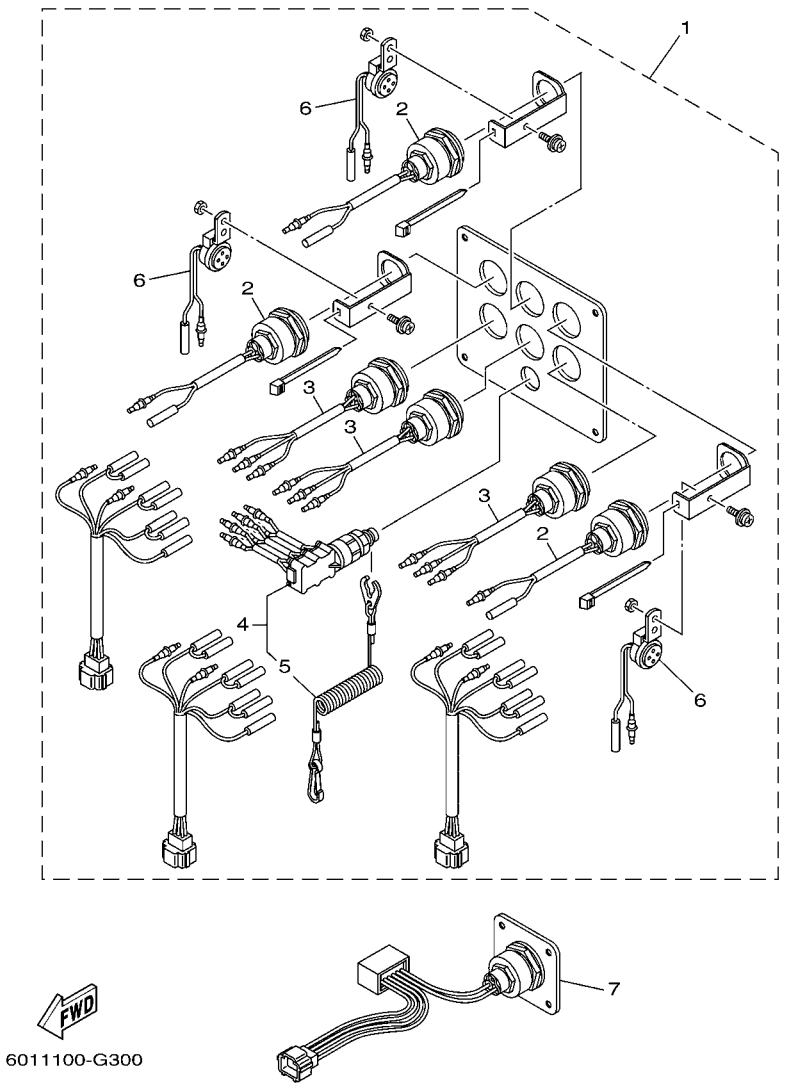

REF. NO.	PART NO. N° PIECES	DESCRIPTION DESCRIPTION	2008					REMARKS REMARQUES
1	6X6–82570–20	PANEL SWITCH ASSY PLATINE D'INTERRUPEUR CPLT	1					2 STATION SUB 2 STATION SUB
2	6X1–81870–00	.STARTING SWITCH ASSY .CONTACT A CLEF	3					
3	6X1–82550–00	.ENGINE STOP SWITCH ASSY .COMMUTATEUR D'ARRET CPLT	3					
4	6X6–82575–00	.ENGINE STOP SWITCH ASSY .COUPE CIRCUIT CPLT	1					
5	682–82556–00	..LANYARD, STOP SWITCH ..PLAQUETTE	1					
6	6R5–83383–00	.BUZZER .RONFLEUR	3					
7	6X6–82570–A0	PANEL SWITCH ASSY PLATINE D'INTERRUPEUR CPLT	2					2 STATION SUB 2 STATION SUB

KEY SWITCH W/ PANEL

Part No.	Remarks
64D-82570-03	With bullet connectors for stop switch
64D-82570-20	With 2-pin coupler for stop switch

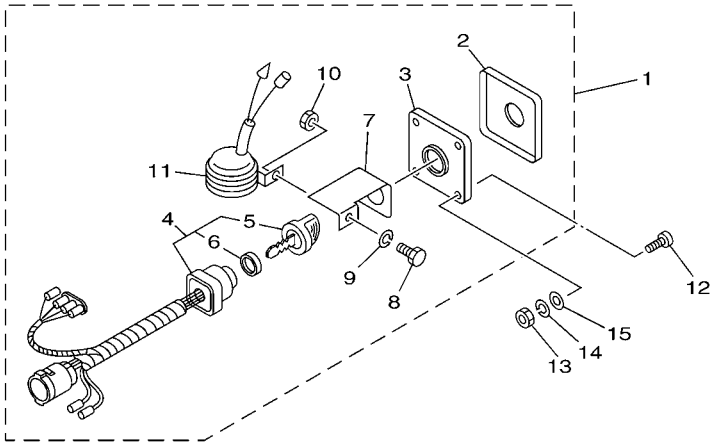

EMERGENCY STOP SWITCH W/ PANEL

Part No.	Remarks
64D-82570-10	With bullet connectors for stop switch
64D-82570-30	With 2-pin coupler for stop switch

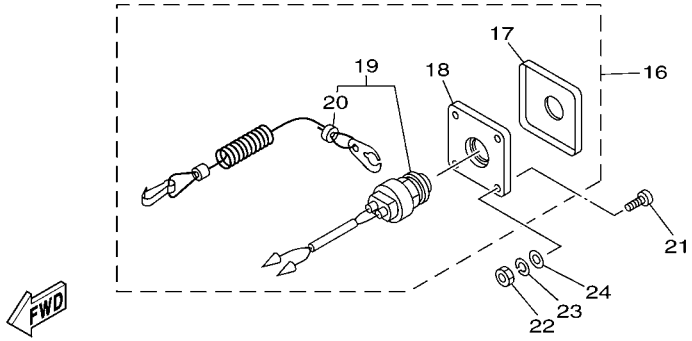

6011100-G310

FIG. 31 SWITCH & PANEL 11 — TABLEAU DE CONTACTEUR 11

REF. NO.	PART NO. N° PIECES	DESCRIPTION DESCRIPTION	2008					REMARKS REMARQUES
1	64D–82570–03	PANEL SWITCH ASSY PLATINE D'INTERRUPEUR CPLT	1					UR UR
	64D–82570–20	PANEL SWITCH ASSY PLATINE D'INTERRUPEUR CPLT	1					UR UR
2	64D–82571–00	.PANEL, SWITCH .TABLEAU, CONTACTEUR	1					
3	64D–82588–00	.PLATE .PLAQUE	1					
4	64D–82510–03	.MAIN SWITCH ASSY .CONTACTEUR A CLEF COMPLET	1					
5	703–82577–00	..CAP, KEY ..CABOCHON	1					
6	6K1–82532–00	..CAP ..COUVERCLE	1					
7	64D–82581–00	.STAY, CORD CLAMP .SUPPORT, COLLIER DE CORDON	1					
8	97303–05012	.BOLT .BOULON	1					
9	92903–05100	.WASHER, SPRING .RONDELLE, GROWER	1					
10	95303–05700	.NUT .ECROU	1					
11	688–83383–11	.BUZZER .RONFLEUR	1					
12	90149–05M05	SCREW VIS	4					
13	95380–05600	NUT ECROU	4					
14	92990–05100	WASHER, SPRING RONDELLE, GROWER	4					
15	92990–05600	WASHER, PLATE RONDELLE, PLATE	4					
16	64D–82570–10	PANEL SWITCH ASSY PLATINE D'INTERRUPEUR CPLT	1					UR UR
	64D–82570–30	PANEL SWITCH ASSY PLATINE D'INTERRUPEUR CPLT	1					UR UR
17	64D–82571–10	.PANEL, SWITCH .TABLEAU, CONTACTEUR	1					
18	64D–82588–10	.PLATE .PLAQUE	1					
19	64D–82575–00	.ENGINE STOP SWITCH ASSY .COUPE CIRCUIT CPLT	1					FOR 64D-82570-10 FOR 64D-82570-10
	64D–82575–10	.ENGINE STOP SWITCH ASSY .COUPE CIRCUIT CPLT	1					FOR 64D-82570-30 FOR 64D-82570-30
20	682–82556–00	..LANYARD, STOP SWITCH ..PLAQUETTE	1					
21	90149–05M05	SCREW VIS	4					
22	95380–05600	NUT ECROU	4					
23	92990–05100	WASHER, SPRING RONDELLE, GROWER	4					
24	92990–05600	WASHER, PLATE RONDELLE, PLATE	4					

KEY SWITCH W/O PANEL

Ref. No.	Part No.	Remarks
1	704-82510-07	With bullet connectors for stop switch
4	6X3-8257B-00	With 2-pin coupler for stop switch

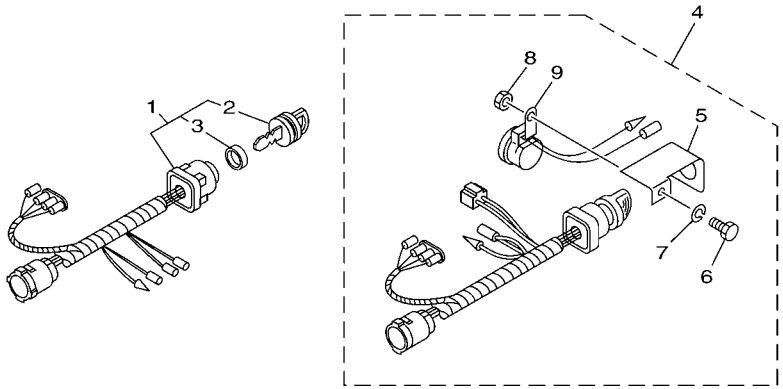

EMERGENCY STOP SWITCH W/ PANEL

Ref. No.	Part No.	Remarks
10	688-82575-01	With bullet connectors for stop switch
12	64D-82575-10	With 2-pin coupler for stop switch

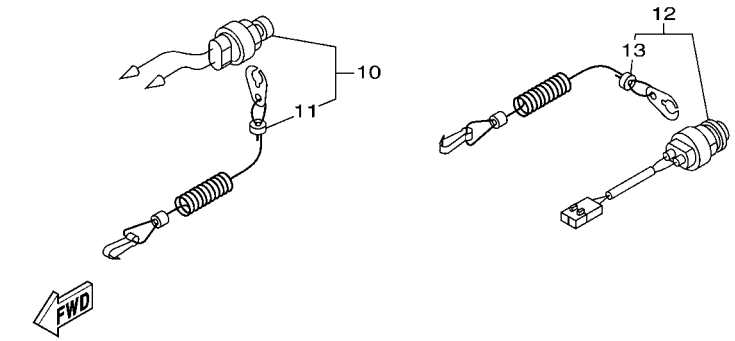

6011100-G320

FIG. 32 SWITCH & PANEL 12 TABLEAU DE CONTACTEUR 12

REF. NO.	PART NO. N° PIECES	DESCRIPTION DESCRIPTION	2008					REMARKS REMARQUES
1	704–82510–07	MAIN SWITCH ASSY CONTACTEUR A CLEF COMPLET	1					
2	703–82577–00	.CAP, KEY .CABOCHON	1					
3	6K1–82532–00	.CAP .COUVERCLE	1					
4	6X3–8257B–00	PANEL SWITCH COMP. PLATINE D'INTERRUPEUR CPLT	1					
5	64D–82581–00	.STAY, CORD CLAMP .SUPPORT, COLLIER DE CORDON	1					
6	97303–05012	.BOLT .BOULON	1					
7	92903–05100	.WASHER, SPRING .RONDELLE, GROWER	1					
8	95303–05700	.NUT .ECROU	1					
9	6R5–83383–00	.BUZZER .RONFLEUR	1					
10	688–82575–01	ENGINE STOP SWITCH ASSY COUPE CIRCUIT CPLT	1					
11	682–82556–00	.LANYARD, STOP SWITCH .PLAQUETTE	1					
12	64D–82575–10	ENGINE STOP SWITCH ASSY COUPE CIRCUIT CPLT	1					
13	682–82556–00	.LANYARD, STOP SWITCH .PLAQUETTE	1					

FIG. 33 SWITCH & PANEL 13 — TABLEAU DE CONTACTEUR 13

ADAPTER FOR EMERGENCY STOP SWITCH LEAD

ENGINE SHUT-OFF LANYARD (CORD)

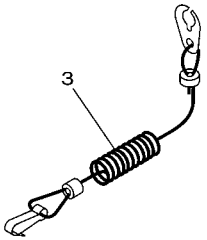

PT/T SWITCH PANEL
(FOR PTT MODELS)

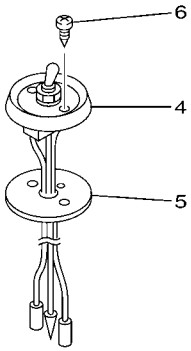

6011100-G330

REF. NO.	PART NO. N° PIECES	DESCRIPTION DESCRIPTION	2008					REMARKS REMARQUES
1	6X3–81971–00	WIRE, LEAD FIL	1					
2	6X3–81971–10	WIRE, LEAD FIL	1					
3	682–82556–00	LANYARD, STOP SWITCH PLAQUETTE	1					
4	688–82563–10	TRIM & TILT SWITCH ASSY INCLINER ET PARER COMMUTATEUR	1					
5	688–82388–00	PLATE PLAQUETTE	1					
6	97780–40116	SCREW, TAPPING VIS, TETE BOMBEE	2					

SWITCH PANEL HARNESS

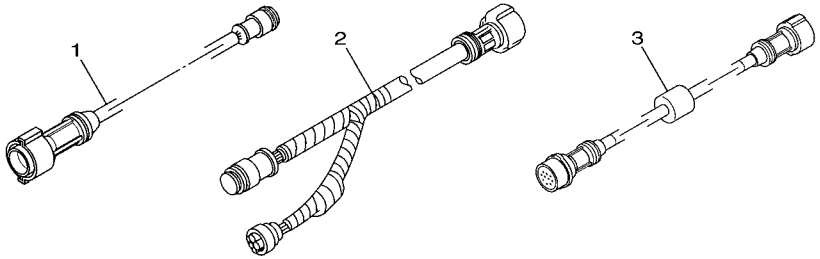

7-PIN MAIN HARNESS (Without PTT) | 10-PIN MAIN HARNESS | 7 TO 10-PIN ADAPTER

WIRE HARNESS

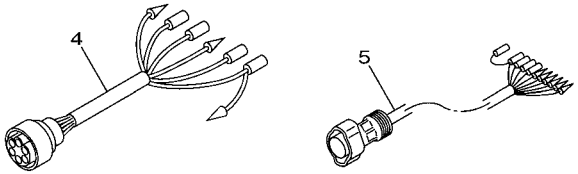

SUB WIRE LEAD (For 10-pin remote control main harness)

SUB WIRE LEAD (For 10-pin main harness of 703 remote control)

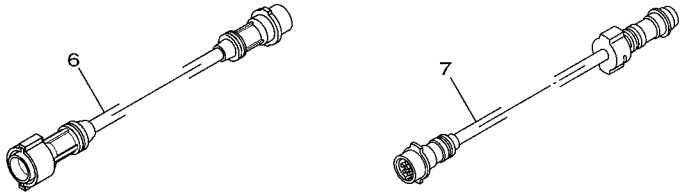

7-PIN EXTENSION HARNESS

10-PIN EXTENSION HARNESS

6011100-G340

FIG. 34 WIRE HARNESS 1 FAISCEAU DE FILS 1

REF. NO.	PART NO. N° PIECES	DESCRIPTION DESCRIPTION	2008					REMARKS REMARQUES
1	688–82586–50	EXTENSION, WIRE HARNESS (5M) EXTENSION, FAISCEAU DE FILS (5	1					(7P) (7P)
2	688–8258A–50	EXTENSION, WIRE HARNESS (5M) EXTENSION, FAISCEAU DE FILS (5	1					UR (10P) UR (10P)
	688–8258A–60	EXTENSION, WIRE HARNESS (6M) EXTENSION, FAISCEAU DE FILS (6	1					UR (10P) UR (10P)
	61B–8258A–01	EXTENSION, WIRE HARNESS (9.5M) EXTENSION, FAISCEAU DE FILS(9.	1					UR (10P) UR (10P)
	6K1–8258A–40	EXTENSION, WIRE HARNESS (8M) EXTENSION, FAISCEAU DE FILS(8M	1					UR (10P) UR (10P)
	6X3–8258A–00	EXTENSION, WIRE HARNESS (5M) EXTENSION, FAISCEAU DE FILS(5M	1					UR (10P) UR (10P)
	6X3–8258A–10	EXTENSION, WIRE HARNESS (6M) EXTENSION, FAISCEAU DE FILS(6M	1					UR (10P) UR (10P)
3	703–8258A–00	EXTENSION, WIRE HARNESS (0.5M) EXTENSION, FAISCEAU DE FILS (0	1					7P TO 10P ADAPTER 7P TO 10P ADAPTER
4	704–85721–00	WIRE, LEAD FIL, SECONDAIRE	1					
5	688–8258A–20	EXTENSION, WIRE HARNESS (4.9M) EXTENSION, FAISCEAU DE FILS (4	1					(10P) (10P)
6	688–82586–11	EXTENSION, WIRE HARNESS (2.0M) EXTENSION, FAISCEAU DE FILS (2	1					UR L:2M(7P) UR L:2M(7P)
	688–82586–31	EXTENSION, WIRE HARNESS (3.0M) EXTENSION, FAISCEAU DE FILS (3	1					UR L:3M(7P) UR L:3M(7P)
7	688–8258A–10	EXTENSION, WIRE HARNESS (2M) EXTENSION, FAISCEAU DE FILS (2	1					UR (10P) UR (10P)
	688–8258A–30	EXTENSION, WIRE HARNESS (3M) EXTENSION, FAISCEAU DE FILS (3	1					UR (10P) UR (10P)

FIG. 35 WIRE HARNESS 2 FAISCEAU DE FILS 2

DIGITAL NETWORK
REMOTE CONTROL WIRE HARNESS

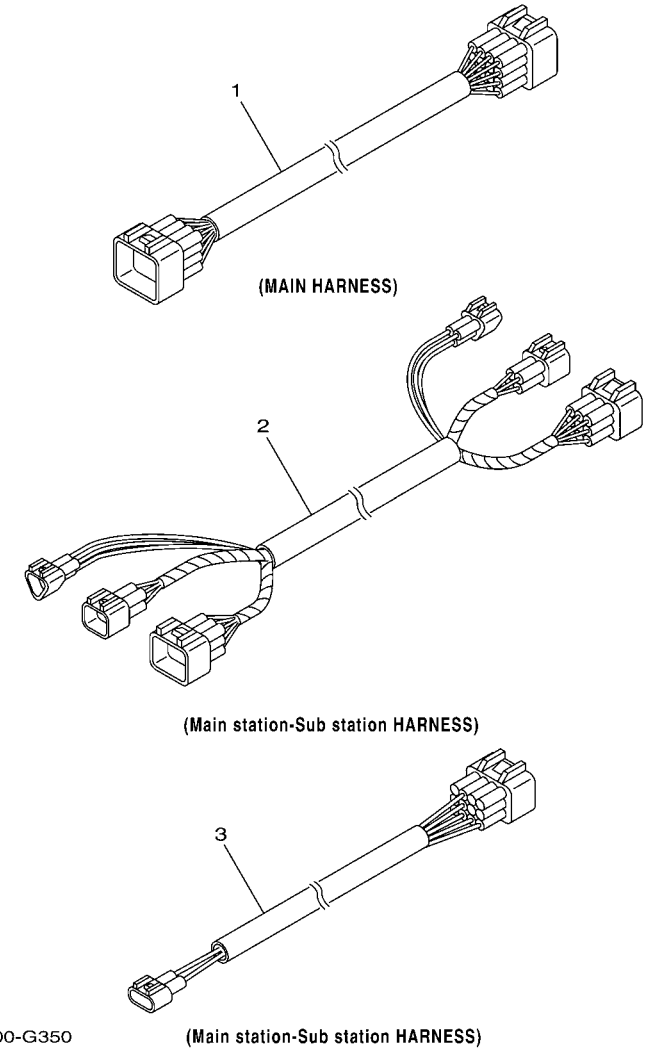

6011100-G350

REF. NO.	PART NO. N° PIECES	DESCRIPTION DESCRIPTION	2008					REMARKS REMARQUES
1	6X6–8258A–00	EXTENSION, WIRE HARNESS (6.1M) EXTENSION, FIL FAISCEAU (6.1M)	1					UR UR
	6X6–8258A–10	EXTENSION, WIRE HARNESS (7M) EXTENSION, FIL FAISCEAU (7M)	1					UR UR
	6X6–8258A–20	EXTENSION, WIRE HARNESS (8M) EXTENSION, FIL FAISCEAU (8M)	1					UR UR
	6X6–8258A–30	EXTENSION, WIRE HARNESS (10M) EXTENSION, FIL FAISCEAU (10M)	1					UR UR
	6X6–8258A–40	EXTENSION, WIRE HARNESS (12M) EXTENSION, FIL FAISCEAU (12M)	1					UR UR
2	6X6–8258A–A0	EXTENSION, WIRE HARNESS (5M) EXTENSION, FIL FAISCEAU (5M)	1					UR 2 STATION UR 2 STATION
	6X6–8258A–C0	EXTENSION, WIRE HARNESS (8M) EXTENSION, FIL FAISCEAU (8M)	1					UR 2 STATION UR 2 STATION
	6X6–8258A–E0	EXTENSION, WIRE HARNESS (12.2M) EXTENSION, FIL FAISCEAU (12.2M)	1					UR 2 STATION UR 2 STATION
3	6X6–8258A–B0	EXTENSION, WIRE HARNESS (5M) EXTENSION, FIL FAISCEAU (5M)	1					UR 2 STATION UR 2 STATION
	6X6–8258A–D0	EXTENSION, WIRE HARNESS (8M) EXTENSION, FIL FAISCEAU (8M)	1					UR 2 STATION UR 2 STATION
	6X6–8258A–F0	EXTENSION, WIRE HARNESS (12.2M) EXTENSION, FIL FAISCEAU (12.2M)	1					UR 2 STATION UR 2 STATION

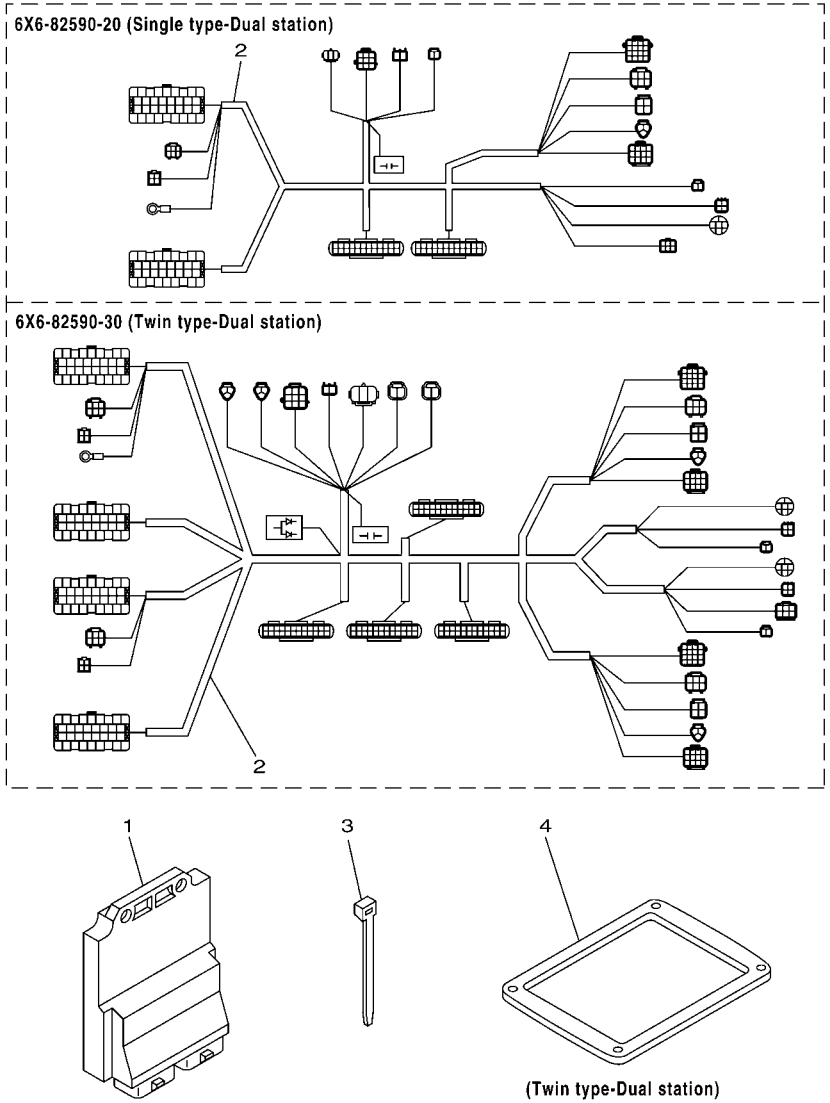

FIG. 36 ELECTRICAL DBW REMOTE CONTROL BOITIER COMMANDE

REF. NO.	PART NO. N° PIECES	DESCRIPTION DESCRIPTION	2008					REMARKS REMARQUES
1	6X6–85590–00	CONTROL UNIT ASSY BLOC DE CONTROLE	1					SINGLE, 2 STATION SINGLE, 2 STATION
	6X6–85590–00	CONTROL UNIT ASSY BLOC DE CONTROLE	2					TWIN, 2 STATION TWIN, 2 STATION
2	6X6–82590–20	WIRE HARNESS ASSY FAISCEAU DE FILS COMPLET	1					SINGLE, 2 STATION SINGLE, 2 STATION
	6X6–82590–30	WIRE HARNESS ASSY FAISCEAU DE FILS COMPLET	1					TWIN, 2 STATION TWIN, 2 STATION
3	703–82591–00	BAND COLLIER	4					SINGLE, 2 STATION SINGLE, 2 STATION
	703–82591–00	BAND COLLIER	8					TWIN, 2 STATION TWIN, 2 STATION
4	6X6–48176–10	GROMMET PASSE-FIL	1					TWIN, 2 STATION TWIN, 2 STATION

Part No.	Applicable model	Remarks
655-48501-02	E8D/EK8D	Rope type
655-48501-10	E8D/EK8D	Ball post type

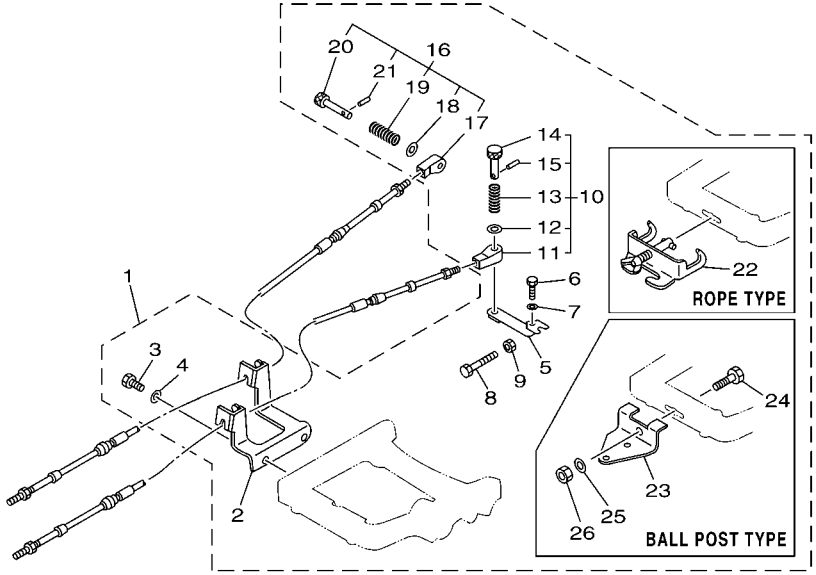

6011100-G370

FIG. 37 REMO CON ATTACHMENT 1 COMMANDE A DISTANCE 1

REF. NO.	PART NO. N° PIECES	DESCRIPTION DESCRIPTION	2008					REMARKS REMARQUES
1	655–48501–02	REMOTE CONT. ATTACHMENT ASSY. COMMANDE A DISTANCE (KIT)	1					UR ROPE TYPE UR ROPE TYPE
	655–48501–10	REMOTE CONT. ATTACHMENT ASSY. COMMANDE A DISTANCE (KIT)	1					UR BALL POST TYPE UR BALL POST TYPE
2	655–48531–51	.BRACKET, REMOTE CONTROL 1 .ETRIER 1, COMMANDE A DISTANCE	1					
3	97095–06018	.BOLT .BOULON	2					
4	92995–06600	.WASHER .RONDELLE	2					
5	647–48534–50	.THROTTLE LEVER, CONTROL .LEVIER D'ACCELERATION	1					
6	97095–05020	.BOLT .BOULON	1					
7	92995–05600	.WASHER .RONDELLE	1					
8	97090–06045	.BOLT .BOULON	1					
9	95380–06600	.NUT, HEXAGON .ECROU	1					
10	647–48330–50	.CABLE END ASSY .RACCORD DE CABLE	1					
11	617–48346–90	..CABLE END, REMOTE CONTROL ..CHAPE CABLE	1					
12	92990–08600	..WASHER, PLATE ..RONDELLE, PLATE	1					
13	90501–10071	..SPRING, COMPRESSION ..RESSORT, COMPRESSION	1					
14	617–48331–91	..HOOK, CABLE ..CROCHET, CABLE	1					
15	91690–30012	..PIN, SPRING ..AGRAFFE	1					
16	647–48340–50	.CABLE END ASSY .CHAPE CABLE	1					
17	647–48346–50	..CABLE END, REMOTE CONTROL ..CHAPE CABLE	1					
18	92990–08600	..WASHER, PLATE ..RONDELLE, PLATE	1					
19	90501–10264	..SPRING, COMPRESSION ..RESSORT, COMPRESSION	1					
20	617–48361–91	..HOOK, CABLE ..CROCHET, CABLE	1					
21	91690–30012	..PIN, SPRING ..AGRAFFE	1					
22	700–48510–12	.STEERING HOOK ASSY .ATTACHE DE DIRECTION (ENS.)	1					UR ROPE TYPE UR ROPE TYPE
23	676–48511–10	.HOOK, STEERING .ATTACHE, DIRECTION	1					UR BALL POST TYPE UR BALL POST TYPE
24	97075–10040	.BOLT .BOULON	1					
25	92990–10600	.WASHER, PLATE .RONDELLE, PLATE	1					
26	90185–10051	.NUT, SELF-LOCKING .ECROU,AUTO-BLOQUANT	1					

Part No.	Applicable model
63V-48501-00	9.9F (9.9), 15F (15)

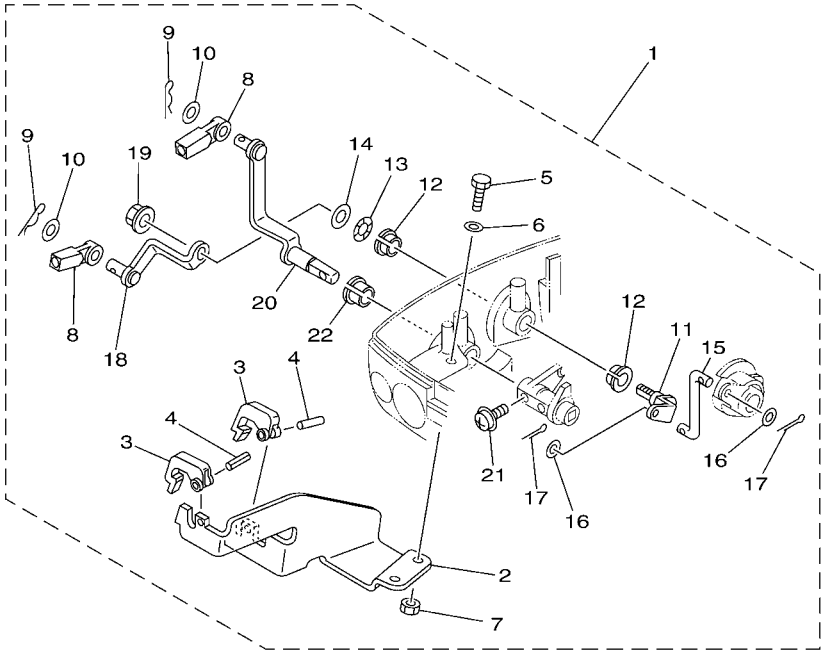

6011100-G380

FIG. 38 REMO CON ATTACHMENT 2 COMMANDE A DISTANCE 2

REF. NO.	PART NO. N° PIECES	DESCRIPTION DESCRIPTION	2008					REMARKS REMARQUES
1	63V–48501–00	REMOTE CONT. ATTACHMENT ASSY. COMMANDE A DISTANCE (KIT)	1					
2	63V–48531–00	.BRACKET, REMOTE CONTROL 1 .ETRIER 1, COMMANDE A DISTANCE	1					
3	682–48538–50	.CLAMP, CABLE 1 .COLLIER	2					
4	91690–30012	.PIN, SPRING .AGRAFFE	2					
5	97095–06016	.BOLT .BOULON	2					
6	92995–06600	.WASHER .RONDELLE	2					
7	95380–06600	.NUT, HEXAGON .ECROU	2					
8	663–48344–00	.CABLE END, REMOTE CONTROL .CHAPE CABLE	2					
9	90468–18008	.CLIP .JONC	2					
10	90201–08M12	.WASHER, PLATE .RONDELLE, PLATE	2					
11	63V–42154–00	.LEVER, THROTTLE CONTROL .LEVIER DE COMMANDE D'AVANCE	1					
12	90386–10025	.BUSH .DOUILLE	2					
13	90206–10M04	.WASHER, WAVE .RONDELLE, ONDULEE	1					
14	90201–10M02	.WASHER, PLATE .RONDELLE, PLATE	1					
15	63V–42192–00	.ROD 2 .TRINGLE 2	1					
16	90201–04M06	.WASHER, PLATE .RONDELLE, PLATE	2					
17	91490–20010	.PIN. COTTER .GOUPILLE	2					
18	63V–48534–00	.THROTTLE LEVER, CONTROL .LEVIER D'ACCELERATION	1					
19	95780–08300	.NUT, FLANGE .ECROU	1					
20	63V–48544–00	.LEVER, SHIFTCONTROL .POIGNEE, INVERSION	1					
21	90159–05M25	.SCREW, WITH WASHER .VIS, AVEC RONDELLE	1					
22	90386–10009	.BUSH .DOUILLE	1					

Part No.	Applicable model
6L2-48501-11	20D (20), 25N (25)

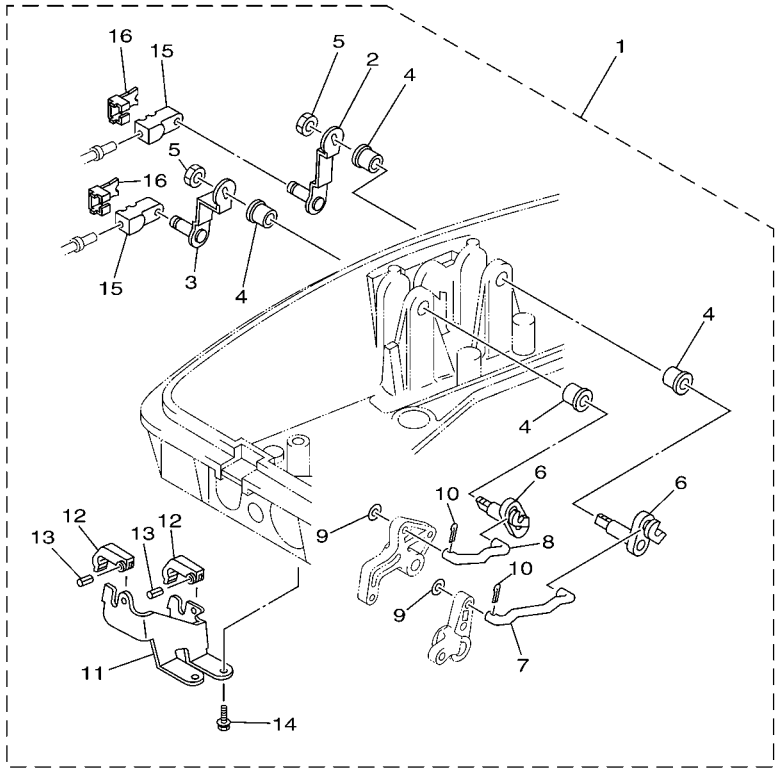

6011100-G390

FIG. 39 REMO CON ATTACHMENT 3 COMMANDE A DISTANCE 3

REF. NO.	PART NO. N° PIECES	DESCRIPTION DESCRIPTION	2008					REMARKS REMARQUES
1	6L2–48501–11	REMOTE CONT. ATTACHMENT ASSY. COMMANDE A DISTANCE (KIT)	1					
2	6L2–48544–01	.LEVER, SHIFTCONTROL .POIGNEE, INVERSION	1					
3	6L2–48534–01	.THROTTLE LEVER, CONTROL .LEVIER D'ACCELERATION	1					
4	90386–10009	.BUSH .DOUILLE	4					
5	95780–08300	.NUT, FLANGE .ECROU	4					
6	6L2–42154–01	.LEVER, THROTTLE CONTROL .LEVIER DE COMMANDE D'AVANCE	2					
7	6L2–42191–01	.ROD 1 .TRINGLE 2	1					
8	6L2–42192–20	.ROD 2 .TRINGLE 2	1					
9	90202–05088	.WASHER, PLATE .RONDELLE, PLATE	2					
10	91490–20010	.PIN. COTTER .GOUPILLE	2					
11	6L2–48531–00	.BRACKET, REMOTE CONTROL 1 .ETRIER 1, COMMANDE A DISTANCE	1					
12	682–48538–50	.CLAMP, CABLE 1 .COLLIER	2					
13	91690–30012	.PIN, SPRING .AGRAFFE	2					
14	90105–06M23	.BOLT FLANGE .BOULON	2					
15	6G8–26363–00	.END, WIRE 1 .EMBOUT DE CABLE	2					
16	6G8–26364–00	.END, CABLE .EMBOUT, DE CABLE	2					

Part No.	Applicable model	Remarks
689-48501-01-4D	25B, 25X, 30H E25B, E30H	Rope type
689-48501-21-4D		Ball post/ Steering guide type

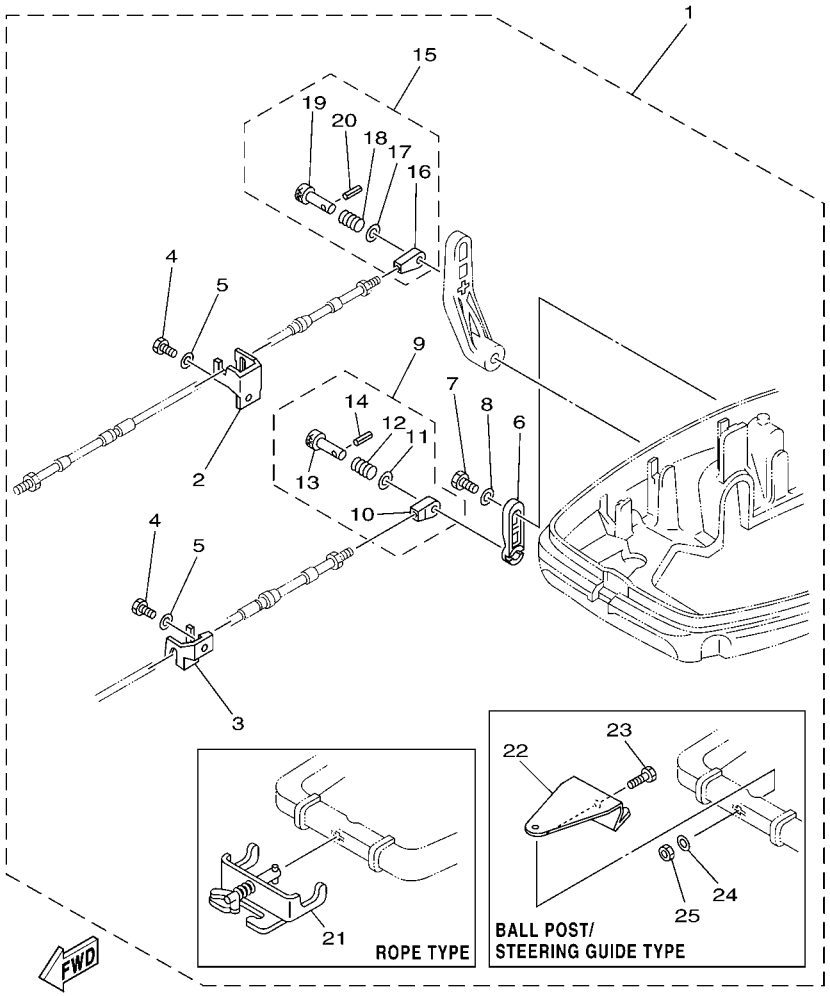

6011100-G400

FIG. 40 REMO CON ATTACHMENT 4 COMMANDE A DISTANCE 4

REF. NO.	PART NO. N° PIECES	DESCRIPTION DESCRIPTION	2008					REMARKS REMARQUES
1	689–48501–01–4D	REMOTE CONT. ATTACHMENT ASSY. COMMANDE A DISTANCE (KIT)	1					UR ROPE TYPE UR ROPE TYPE
	689–48501–21–4D	REMOTE CONT. ATTACHMENT ASSY. COMMANDE A DISTANCE (KIT)	1					UR UR
2	689–48531–50	.BRACKET, REMOTE CONTROL 1 .ETRIER 1, COMMANDE A DISTANCE	1					
3	689–48532–50	.BRACKET, REMOTE CONTROL 2 .ETRIER 2, COMMANDE A DISTANCE	1					
4	97095–06016	.BOLT .BOULON	2					
5	92995–06600	.WASHER .RONDELLE	2					
6	648–48534–50–4D	.THROTTLE LEVER, CONTROL .LEVIER D'ACCELERATION	1					
7	97095–06012	.BOLT .BOULON	1					
8	92995–06600	.WASHER .RONDELLE	1					
9	648–48340–50	.CABLE END ASSY .CHAPE CABLE	1					
10	617–48346–90	..CABLE END, REMOTE CONTROL ..CHAPE CABLE	1					
11	92990–08600	..WASHER, PLATE ..RONDELLE, PLATE	1					
12	90501–10264	..SPRING, COMPRESSION ..RESSORT, COMPRESSION	1					
13	617–48361–91	..HOOK, CABLE ..CROCHET, CABLE	1					
14	91690–30012	..PIN, SPRING ..AGRAFFE	1					
15	648–48330–50	.CABLE END ASSY .RACCORD DE CABLE	1					
16	648–48346–50	..CABLE END, REMOTE CONTROL ..CHAPE CABLE	1					
17	92990–08600	..WASHER, PLATE ..RONDELLE, PLATE	1					
18	90501–10071	..SPRING, COMPRESSION ..RESSORT, COMPRESSION	1					
19	617–48331–91	..HOOK, CABLE ..CROCHET, CABLE	1					
20	91690–30012	..PIN, SPRING ..AGRAFFE	1					
21	700–48510–12	.STEERING HOOK ASSY .ATTACHE DE DIRECTION (ENS.)	1					ROPE TYPE ROPE TYPE
22	689–48511–01	.HOOK, STEERING .ATTACHE, DIRECTION	1					
23	97075–10040	.BOLT .BOULON	1					
24	92990–10600	.WASHER, PLATE .RONDELLE, PLATE	1					
25	90185–10051	.NUT, SELF-LOCKING .ECROU,AUTO-BLOQUANT	1					

Part No.	Applicable model
6J8-48501-03-4D	30D
6J8-48501-11	30D

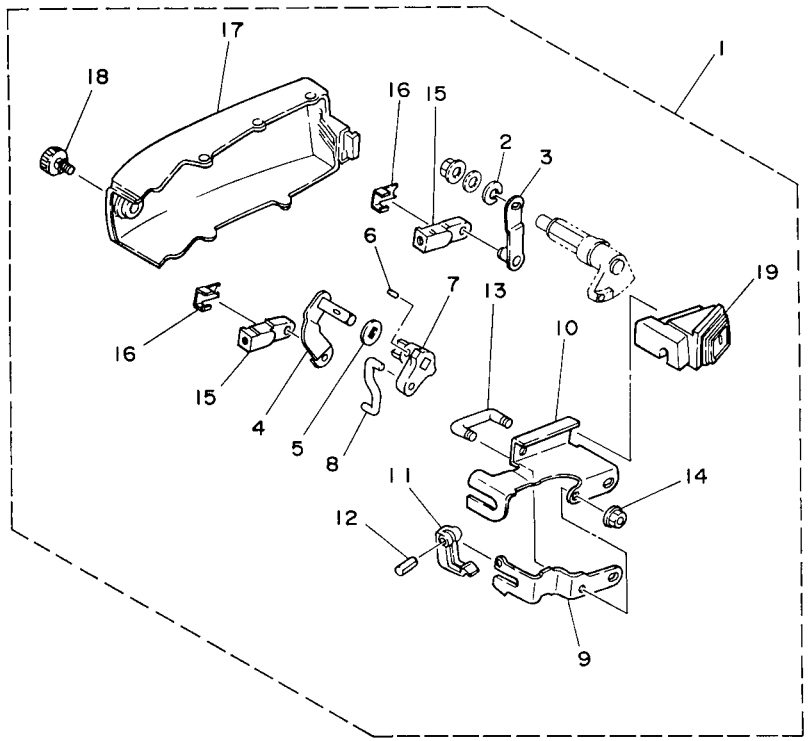

6011100-G410

FIG. 41 REMO CON ATTACHMENT 5 COMMANDE A DISTANCE 5

REF. NO.	PART NO. N° PIECES	DESCRIPTION DESCRIPTION	2008					REMARKS REMARQUES
1	6J8–48501–03–4D	REMOTE CONT. ATTACHMENT ASSY. COMMANDE A DISTANCE (KIT)	1					UR UR
	6J8–48501–11	REMOTE CONT. ATTACHMENT ASSY. COMMANDE A DISTANCE (KIT)	1					UR UR
2	92990–08100	.WASHER, SPRING .RONDELLE, GROWER	1					
3	6J8–48534–00	.THROTTLE LEVER, CONTROL .LEVIER D'ACCELERATION	1					
4	6J8–48544–01	.LEVER, SHIFTCONTROL .POIGNEE, INVERSION	1					
5	6J8–44177–00	.WASHER .RONDELLE	1					
6	90254–03M03	.PIN, SPRING .RIVET, TETE TRONCONIQUE	1					
7	6J8–44173–02	.LEVER, SHIFT CONTROL .POIGNEE, INVERSION	1					
8	6J8–42169–01	.JOINT .AXE	1					
9	6J8–48531–00	.BRACKET, REMOTE CONTROL 1 .ETRIER 1, COMMANDE A DISTANCE	1					
10	6J8–48532–00	.BRACKET, REMOTE CONTROL 2 .ETRIER 2, COMMANDE A DISTANCE	1					
11	682–48538–50	.CLAMP, CABLE 1 .COLLIER	1					
12	91690–30012	.PIN, SPRING .AGRAFFE	1					
13	90109–06M29	.BOLT .BOULON	1					
14	90179–06M24	.NUT .ECROU	2					
15	6G8–26363–00	.END, WIRE 1 .EMBOUT DE CABLE	2					
16	6G8–26364–00	.END, CABLE .EMBOUT, DE CABLE	2					
17	6J8–42723–51	.COVER, BOTTOM .COUVERCLE	1					
18	6J8–42846–00	.SCREW .VIS	1					
19	6J8–42724–10	.GROMMET .PASSE-FIL	1					

Part No.	Applicable model
66T-48501-01	40X, E40X

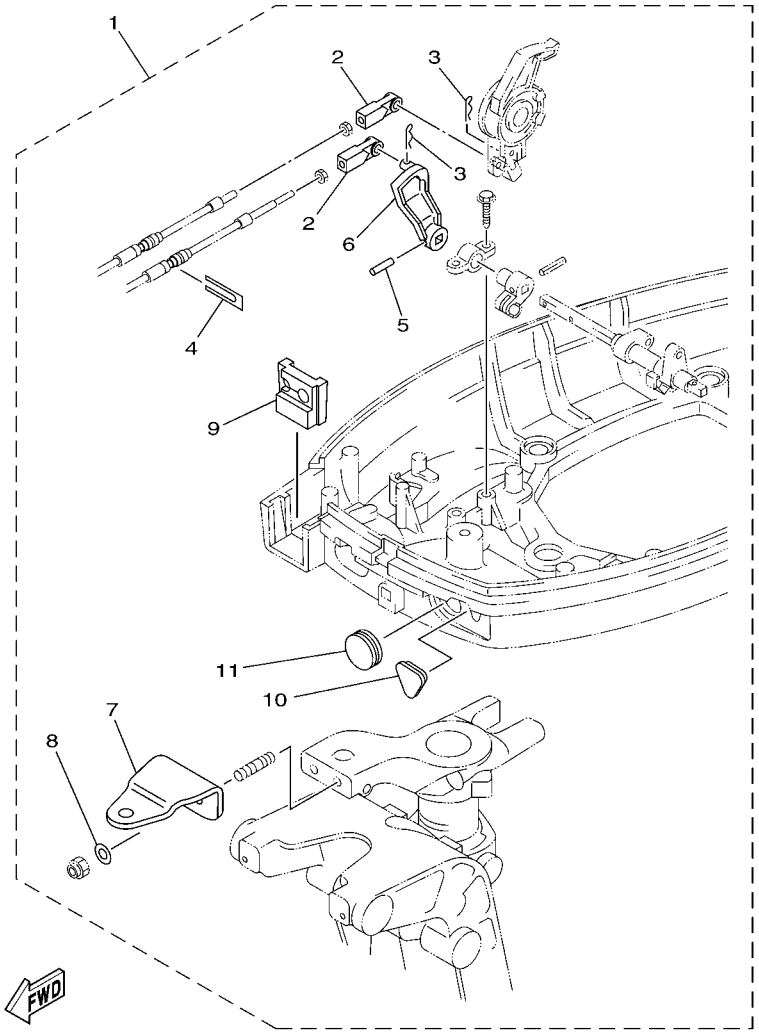

6011100-G420

FIG. 42 REMO CON ATTACHMENT 6 COMMANDE A DISTANCE 6

REF. NO.	PART NO. N° PIECES	DESCRIPTION DESCRIPTION	2008					REMARKS REMARQUES
1	66T–48501–01	REMOTE CONT. ATTACHMENT ASSY. COMMANDE A DISTANCE (KIT)	1					
2	663–48344–00	.CABLE END, REMOTE CONTROL .CHAPE CABLE	2					
3	90468–18008	.CLIP .JONC	2					
4	6H3–48538–00	.CLAMP, CABLE 1 .COLLIER	1					
5	90254–03M04	.PIN, SPRING .RIVET, TETE TRONCONIQUE	1					
6	66T–44125–01	.LEVER, SHIFT ROD .LEVIER, TIGE D'INVERSION	1					
7	65W–48511–00	.HOOK, STEERING .ATTACHE, DIRECTION	1					
8	90201–10120	.WASHER, PLATE .RONDELLE, PLATE	2					
9	66T–42725–30	.GROMMET .PASSE-FIL	1					
10	65W–26326–10	.GROMMET .RONDELLE CAOUTCHOUC	1					
11	65W–42726–10	.GROMMET .PASSE-FIL	1					

Part No.	Applicable model
60R-G8501-00	F6A (F6), F8C (F8), FT8D (T8)
6AU-48501-00	F9.9F (F9.9), FT9.9G (T9.9)

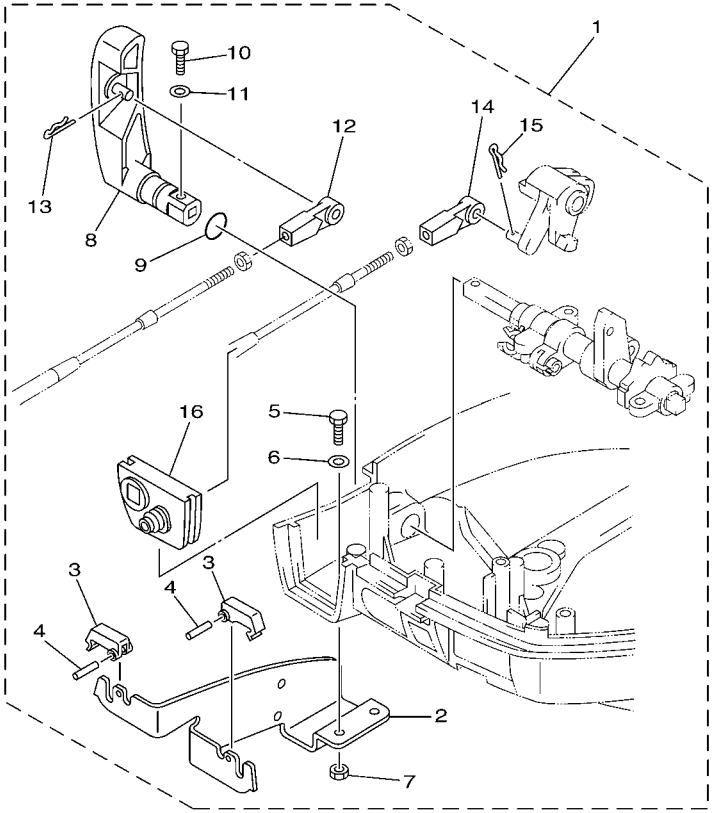

6011100-G430

FIG. 43 REMO CON ATTACHMENT 7 COMMANDE A DISTANCE 7

REF. NO.	PART NO. N° PIECES	DESCRIPTION DESCRIPTION	2008					REMARKS REMARQUES
1	60R–G8501–00	REMOTE CONT. ATTACHMENT ASSY. COMMANDE A DISTANCE (KIT)	1					UR UR
	6AU–48501–00	REMOTE CONT. ATTACHMENT ASSY. COMMANDE A DISTANCE (KIT)	1					UR UR
2	68T–48531–00	.BRACKET, REMOTE CONTROL 1 .ETRIER 1, COMMANDE A DISTANCE	1					
3	682–48538–50	.CLAMP, CABLE 1 .COLLIER	2					
4	91690–30012	.PIN, SPRING .AGRAFFE	2					
5	97095–06012	.BOLT .BOULON	2					
6	92995–06600	.WASHER .RONDELLE	2					
7	95380–06600	.NUT, HEXAGON .ECROU	2					
8	60R–G4111–10	.HANDLE, GEAR SHIFT .POIGNEE, LEVIER D'EMBRAYAGE	1					FOR 60R-G8501-00 FOR 60R-G8501-00
	6AU–44111–10	.HANDLE, GEAR SHIFT .POIGNEE, LEVIER D'EMBRAYAGE	1					FOR 6AU-48501-00 FOR 6AU-48501-00
9	93210–12327	.O-RING .JOINT TORIQUE	1					
10	97095–05016	.BOLT .BOULON	1					
11	92995–05600	.WASHER .RONDELLE	1					
12	663–48344–00	.CABLE END, REMOTE CONTROL .CHAPE CABLE	1					
13	90468–18008	.CLIP .JONC	1					
14	663–48344–00	.CABLE END, REMOTE CONTROL .CHAPE CABLE	1					
15	90468–18008	.CLIP .JONC	1					
16	68T–42725–10	.GROMMET .PASSE-FIL	1					

Part No.	Applicable model
66M-48501-00	F9.9C (F9.9-2), FT9.9D(T9.9-2), F15A

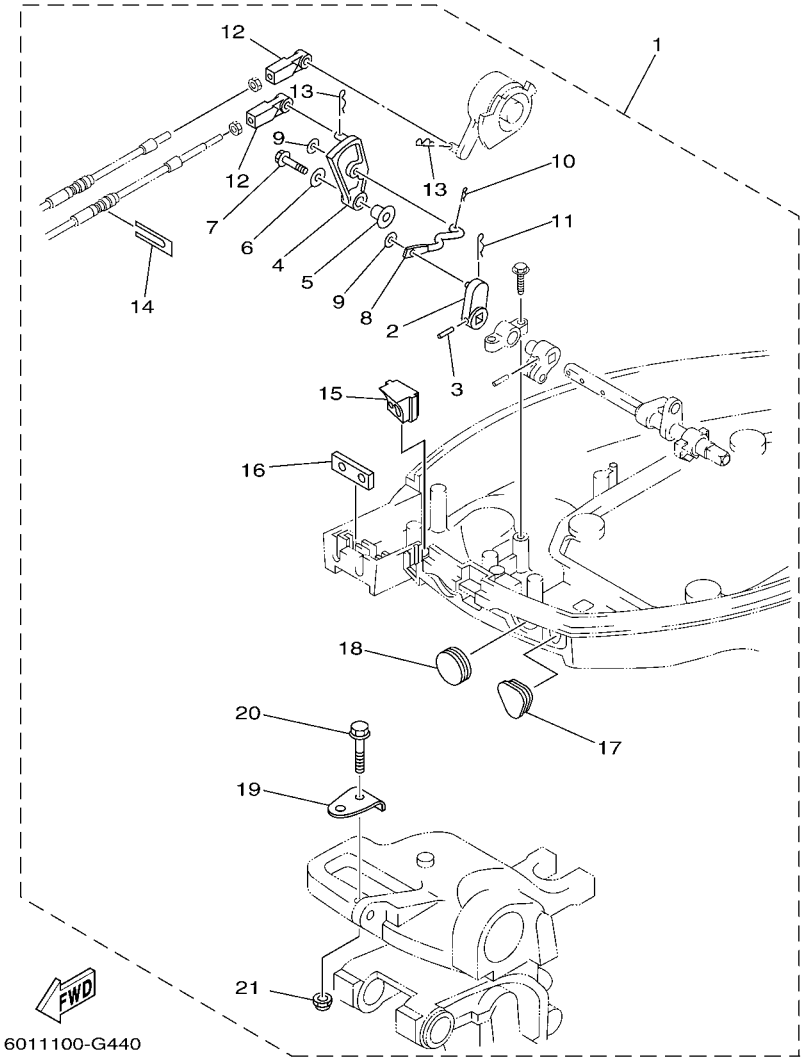

FIG. 44 REMO CON ATTACHMENT 8 COMMANDE A DISTANCE 8

REF. NO.	PART NO. N° PIECES	DESCRIPTION DESCRIPTION	2008					REMARKS REMARQUES
1	66M–48501–00	REMOTE CONT. ATTACHMENT ASSY. COMMANDE A DISTANCE (KIT)	1					
2	65W–44142–00	.JOINT .AXE	1					
3	90254–03M05	.PIN, SPRING .RIVET, TETE TRONCONIQUE	1					
4	65W–44125–00	.LEVER, SHIFT ROD .LEVIER, TIGE D'INVERSION	1					
5	90387–06M29	.COLLAR .COLLERETTE	1					
6	90201–06M31	.WASHER, PLATE .RONDELLE, PLATE	1					
7	97595–06525	.BOLT, WITH WASHER .VIS HEXAGONAL AVC RONDELLE	1					
8	66M–44192–00	.JOINT, ROD 1 .RACCORD 1, BIELLETTE	1					
9	90201–05M06	.WASHER, PLATE .RONDELLE, PLATE	2					
10	90468–10005	.CLIP .JONC	1					
11	90468–18008	.CLIP .JONC	1					
12	663–48344–00	.CABLE END, REMOTE CONTROL .CHAPE CABLE	2					
13	90468–18008	.CLIP .JONC	2					
14	6H3–48538–00	.CLAMP, CABLE 1 .COLLIER	1					
15	66M–42725–20	.GROMMET .PASSE-FIL	1					
16	62Y–42727–00	.GROMMET .PASSE-FIL	1					
17	65W–26326–10	.GROMMET .RONDELLE CAOUTCHOUC	1					
18	65W–42726–10	.GROMMET .PASSE-FIL	1					
19	63V–48511–01	.HOOK, STEERING .ATTACHE, DIRECTION	1					
20	97575–08535	.BOLT, WITH WASHER .VIS HEXAGONAL AVC RONDELLE	1					
21	90185–08057	.NUT, SELF-LOCKING .ECROU,AUTO-BLOQUANT	1					

Part No.	Applicable model
65W-48501-00	F20A, F25A (F25), FT25B (T25)

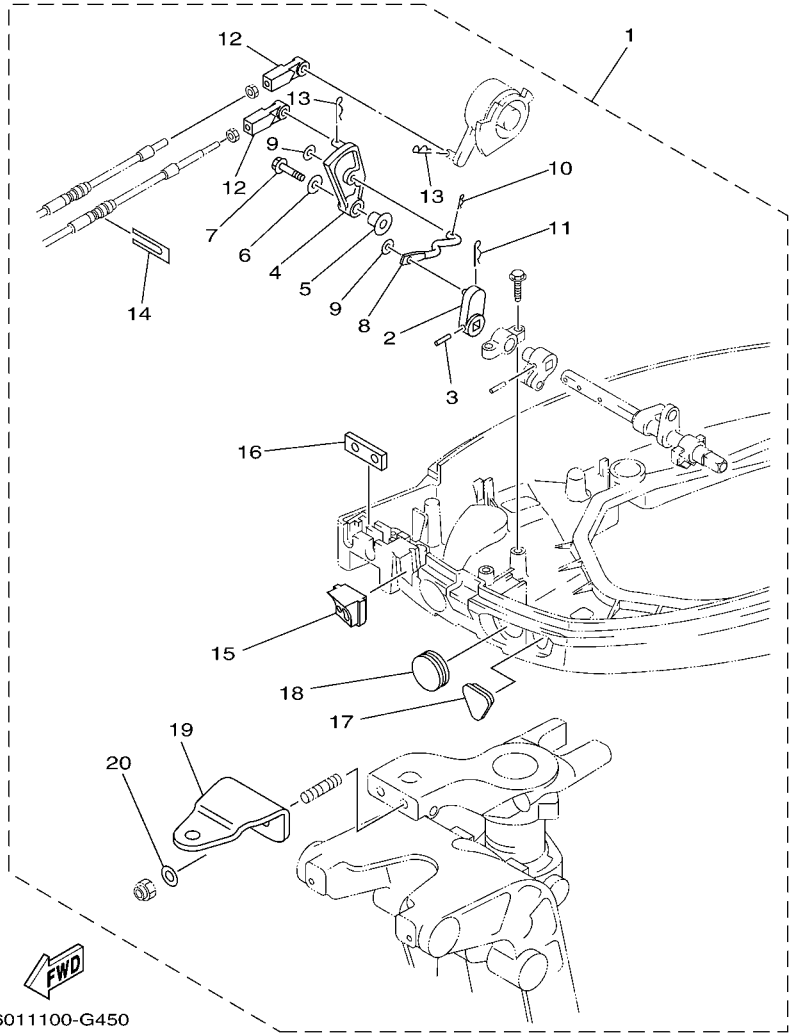

6011100-G450

FIG. 45 REMO CON ATTACHMENT 9 COMMANDE A DISTANCE 9

REF. NO.	PART NO. N° PIECES	DESCRIPTION DESCRIPTION	2008					REMARKS REMARQUES
1	65W–48501–00	REMOTE CONT. ATTACHMENT ASSY. COMMANDE A DISTANCE (KIT)	1					
2	65W–44142–00	.JOINT .AXE	1					
3	90254–03M05	.PIN, SPRING .RIVET, TETE TRONCONIQUE	1					
4	65W–44125–00	.LEVER, SHIFT ROD .LEVIER, TIGE D'INVERSION	1					
5	90387–06M29	.COLLAR .COLLERETTE	1					
6	90201–06M31	.WASHER, PLATE .RONDELLE, PLATE	1					
7	97595–06525	.BOLT, WITH WASHER .VIS HEXAGONAL AVC RONDELLE	1					
8	65W–44192–00	.JOINT, ROD 1 .RACCORD 1, BIELLETTE	1					
9	90201–05M06	.WASHER, PLATE .RONDELLE, PLATE	2					
10	90468–10005	.CLIP .JONC	1					
11	90468–18008	.CLIP .JONC	1					
12	663–48344–00	.CABLE END, REMOTE CONTROL .CHAPE CABLE	2					
13	90468–18008	.CLIP .JONC	2					
14	6H3–48538–00	.CLAMP, CABLE 1 .COLLIER	1					
15	65W–42725–21	.GROMMET .PASSE-FIL	1					
16	62Y–42727–00	.GROMMET .PASSE-FIL	1					
17	65W–26326–10	.GROMMET .RONDELLE CAOUTCHOUC	1					
18	65W–42726–10	.GROMMET .PASSE-FIL	1					
19	65W–48511–00	.HOOK, STEERING .ATTACHE, DIRECTION	1					
20	90201–10120	.WASHER, PLATE .RONDELLE, PLATE	2					

STEERING HOOK

Part No.	Applicable model	Remarks
6L2-48511-00	20D (20), 25N (25)	Steering guide type

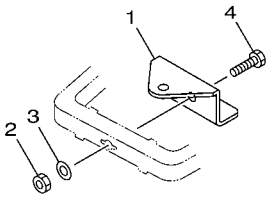

Part No.	Applicable model	Remarks
6J8-48511-51-4D	25N (25), 30D	Steering guide type

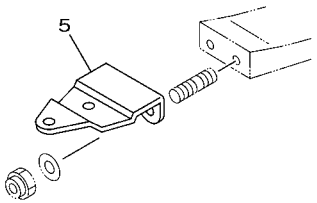

Part No.	Applicable model	Remarks
676-48511-01	40J, E40J, E40G EK40J, EK40G	Steering guide type

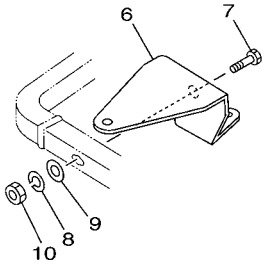

Part No.	Applicable model	Remarks
63D-48511-00-4D	40V, 50H (50) 40Y	Steering guide type
63D-48511-10	FT50C, F50D	

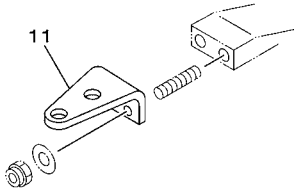

Part No.	Applicable model	Remarks
688-48511-11-4D	75C, 90A (90) 75A, 85A	Steering guide type

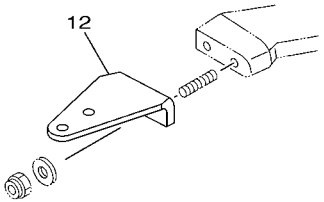

6011100-G460

FIG. 46 STEERING HOOK 1 ATTACHE DIRECTION 1

REF. NO.	PART NO. N° PIECES	DESCRIPTION DESCRIPTION	2008					REMARKS REMARQUES
1	6L2–48511–00	HOOK, STEERING ATTACHE, DIRECTION	1					STEERING GUIDE STEERING GUIDE
2	90185–10051	NUT, SELF-LOCKING ECROU,AUTO-BLOQUANT	1					
3	92990–10600	WASHER, PLATE RONDELLE, PLATE	1					
4	97075–10040	BOLT BOULON	1					
5	6J8–48511–51–4D	HOOK, STEERING ATTACHE, DIRECTION	1					STEERING GUIDE STEERING GUIDE
6	676–48511–01	HOOK, STEERING ATTACHE, DIRECTION	1					STEERING GUIDE STEERING GUIDE
7	97075–10040	BOLT BOULON	1					
8	92990–10100	WASHER, SPRING RONDELLE, GROWER	1					
9	92990–10600	WASHER, PLATE RONDELLE, PLATE	1					
10	95380–10600	NUT ECROU	1					
11	63D–48511–00–4D	HOOK, STEERING ATTACHE, DIRECTION	1					UR STEERING GUIDE UR STEERING GUIDE
	63D–48511–10	HOOK, STEERING ATTACHE, DIRECTION	1					UR STEERING GUIDE UR STEERING GUIDE
12	688–48511–11–4D	HOOK, STEERING ATTACHE, DIRECTION	1					STEERING GUIDE STEERING GUIDE

STEERING HOOK

Part No.	Applicable model	Remarks
63V-48511-01	F8C (F8), FT8D (T8) F9.9C (F9.9-2) FT9.9D (T9.9-2) F9.9F (F9.9) FT9.9G (T9.9) F15A, F15B 9.9F (9.9), 15F (15)	Steering guide type

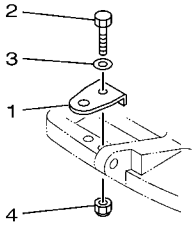

Part No.	Applicable model	Remarks
6AH-48511-00	F13.5B, F15C (F15), F20B (F20)	Steering guide type

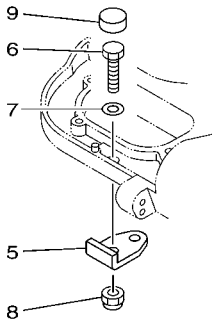

Part No.	Applicable model	Remarks
65W-48511-00	F20A, F25A (F25) F25C, FT25B (T25) F30A (F30), F40B (F40) (E) 40X	Steering guide type
65W-48511-10	F40D F50F (F50), FT50G (T50) F60C (F60), FT60G (T60)	

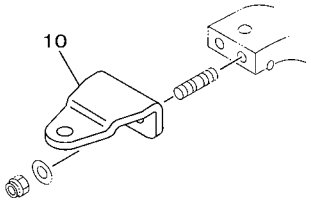

Part No.	Applicable model	Remarks
67F-48511-00-8D	F75B (F75), F80B, F90B (F90) F100D	Steering guide type

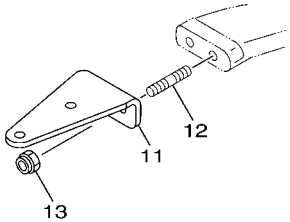

Part No.	Applicable model	Remarks
68V-48511-00	F75C, F95A, F100B F115A (F115)	Steering guide type

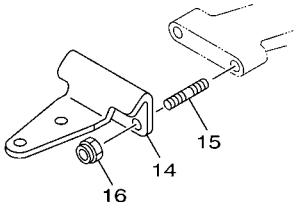

6011100-G470

FIG. 47 STEERING HOOK 2 ATTACHE DIRECTION 2

REF. NO.	PART NO. N° PIECES	DESCRIPTION DESCRIPTION	2008					REMARKS REMARQUES
1	63V–48511–01	HOOK, STEERING ATTACHE, DIRECTION	1					STEERING GUIDE STEERING GUIDE
2	97075–08035	BOLT BOULON	1					
3	92995–08600	WASHER RONDELLE	1					
4	90185–08057	NUT, SELF-LOCKING ECROU,AUTO-BLOQUANT	1					
5	6AH–48511–00	HOOK, STEERING ATTACHE, DIRECTION	1					STEERING GUIDE STEERING GUIDE
6	97095–08025	BOLT BOULON	1					
7	92995–08600	WASHER RONDELLE	1					
8	90185–08057	NUT, SELF-LOCKING ECROU,AUTO-BLOQUANT	1					
9	6AH–44194–00	CAP CAPUCHON	1					
10	65W–48511–00	HOOK, STEERING ATTACHE, DIRECTION	1					UR STEERING GUIDE UR STEERING GUIDE
	65W–48511–10	HOOK, STEERING ATTACHE, DIRECTION	1					UR STEERING GUIDE UR STEERING GUIDE
11	67F–48511–00–8D	HOOK, STEERING ATTACHE, DIRECTION	1					STEERING GUIDE STEERING GUIDE
12	90116–10175	BOLT, STUD GOUJON	2					
13	90185–10051	NUT, SELF-LOCKING ECROU,AUTO-BLOQUANT	2					
14	68V–48511–00	HOOK, STEERING ATTACHE, DIRECTION	1					STEERING GUIDE STEERING GUIDE
15	90116–10175	BOLT, STUD GOUJON	2					
16	90185–10051	NUT, SELF-LOCKING ECROU,AUTO-BLOQUANT	2					

STEERING HOOK

Part No.	Applicable model	Remarks
676-48511-10	6C (6), 8C (8) E8D, EK8D	Ball post type

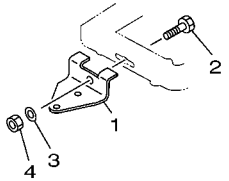

Part No.	Applicable model	Remarks
6G8-48511-10	9.9F (9.9) 15F (15), 30D	Ball post type

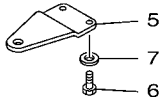

Part No.	Applicable model	Remarks
6J8-48511-01-4D	20D, 30D	Ball post type/ Steering guide type

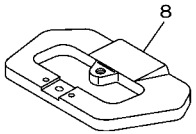

Part No.	Applicable model	Remarks
689-48511-01	25B, 25X, 30H E25B, E30H	Ball post type/ Steering guide type

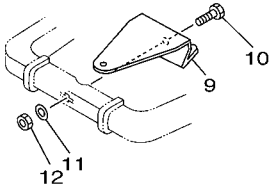

Part No.	Applicable model	Remarks
700-48510-12	6C (6), 8C (8) E8D, EK8D 25B, 30H, E25B, E30H	Rope type

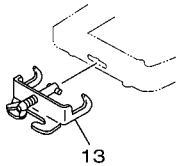

Part No.	Applicable model	Remarks
6G8-48511-00	30D	Rope type

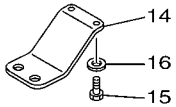

Part No.	Applicable model	Remarks
69G-48511-10	FT8D (T8) FT9.9G (T9.9)	For Linkage to main-engine

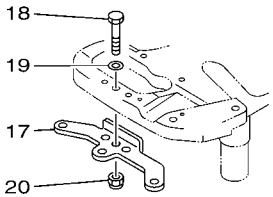

6011100-G480

FIG. 48 STEERING HOOK 3 ATTACHE DIRECTION 3

REF. NO.	PART NO. N° PIECES	DESCRIPTION DESCRIPTION	2008					REMARKS REMARQUES
1	676–48511–10	HOOK, STEERING ATTACHE, DIRECTION	1					BALL POST TYPE BALL POST TYPE
2	97075–10040	BOLT BOULON	1					
3	92990–10600	WASHER, PLATE RONDELLE, PLATE	1					
4	90185–10051	NUT, SELF-LOCKING ECROU,AUTO-BLOQUANT	1					
5	6G8–48511–10	HOOK, STEERING ATTACHE, DIRECTION	1					BALL POST TYPE BALL POST TYPE
6	97095–06016	BOLT BOULON	2					
7	92995–06600	WASHER RONDELLE	2					
8	6J8–48511–01–4D	HOOK, STEERING ATTACHE, DIRECTION	1					
9	689–48511–01	HOOK, STEERING ATTACHE, DIRECTION	1					
10	97075–10040	BOLT BOULON	1					
11	92990–10600	WASHER, PLATE RONDELLE, PLATE	1					
12	90185–10051	NUT, SELF-LOCKING ECROU,AUTO-BLOQUANT	1					
13	700–48510–12	STEERING HOOK ASSY ATTACHE DE DIRECTION (ENS.)	1					ROPE TYPE ROPE TYPE
14	6G8–48511–00	HOOK, STEERING ATTACHE, DIRECTION	1					ROPE TYPE ROPE TYPE
15	97095–06016	BOLT BOULON	2					
16	92995–06600	WASHER RONDELLE	2					
17	69G–48511–10	HOOK, STEERING ATTACHE, DIRECTION	1					
18	97075–08035	BOLT BOULON	1					
19	92995–08600	WASHER RONDELLE	1					
20	90185–08057	NUT, SELF-LOCKING ECROU,AUTO-BLOQUANT	1					

Part No.	Applicable model
63V-61350-00	9.9F (9.9), 15F (15), E9.9D, E15D F9.9C (F9.9-2), F15A, F15B FT9.9D (T9.9-2)

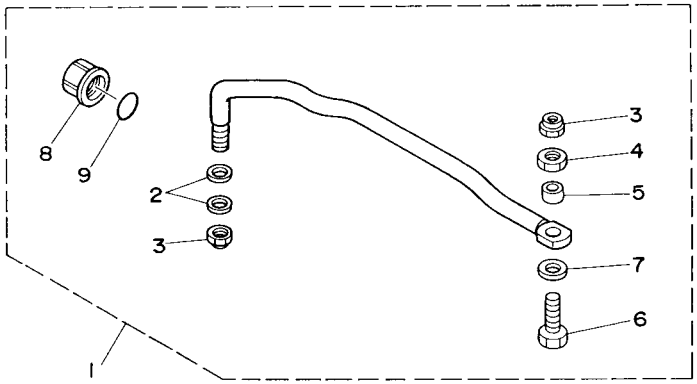

6011100-G490

FIG. 49 STEERING GUIDE 1 — FIXATION DE DIRECTION 1

REF. NO.	PART NO. N° PIECES	DESCRIPTION DESCRIPTION	2008					REMARKS REMARQUES
1	63V–61350–00	STEERING GUIDE ATTACHMENT KIT FIXATIONS DE DIRECTION	1					
2	90201–10M20	.WASHER, PLATE .RONDELLE, PLATE	2					
3	90185–09M01	.NUT, SELF-LOCKING .ECROU,AUTO-BLOQUANT	2					
4	90170–09M03	.NUT .ECROU	1					
5	90387–10M42	.COLLAR .COLLERETTE	1					
6	6E5–61355–00	.BOLT .BOULON	1					
7	90201–10M63	.WASHER, PLATE .RONDELLE, PLATE	1					
8	6E5–43145–01	.CAP, CLAMP BRACKET .CAPUCHON, PRESSE	1					
9	93210–16275	.O-RING .JOINT TORIQUE	1					

Part No.	Applicable model
68T-61350-10	F6A (F6), F8C (F8), FT8D (T8) F9.9F (F9.9), FT9.9G (T9.9)

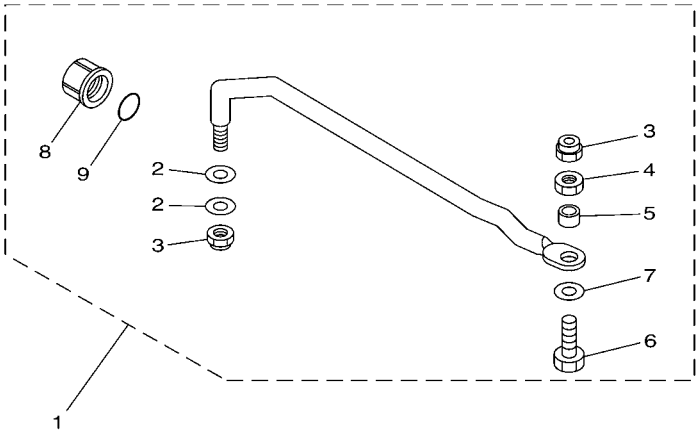

6011100-G500

FIG. 50 STEERING GUIDE 2 — FIXATION DE DIRECTION 2

REF. NO.	PART NO. N° PIECES	DESCRIPTION DESCRIPTION	2008					REMARKS REMARQUES
1	68T–61350–10	STEERING GUIDE ATTACHMENT KIT FIXATIONS DE DIRECTION	1					
2	90201–10M20	.WASHER, PLATE .RONDELLE, PLATE	2					
3	90185–09M01	.NUT, SELF-LOCKING .ECROU,AUTO-BLOQUANT	2					
4	90170–09M03	.NUT .ECROU	1					
5	90387–10M42	.COLLAR .COLLERETTE	1					
6	6E5–61355–00	.BOLT .BOULON	1					
7	90201–10M63	.WASHER, PLATE .RONDELLE, PLATE	1					
8	6E5–43145–01	.CAP, CLAMP BRACKET .CAPUCHON, PRESSE	1					
9	93210–16275	.O-RING .JOINT TORIQUE	1					

Part No.	Applicable model
6AH-61350-00	F13.5B, F15C (F15), F20B (F20)

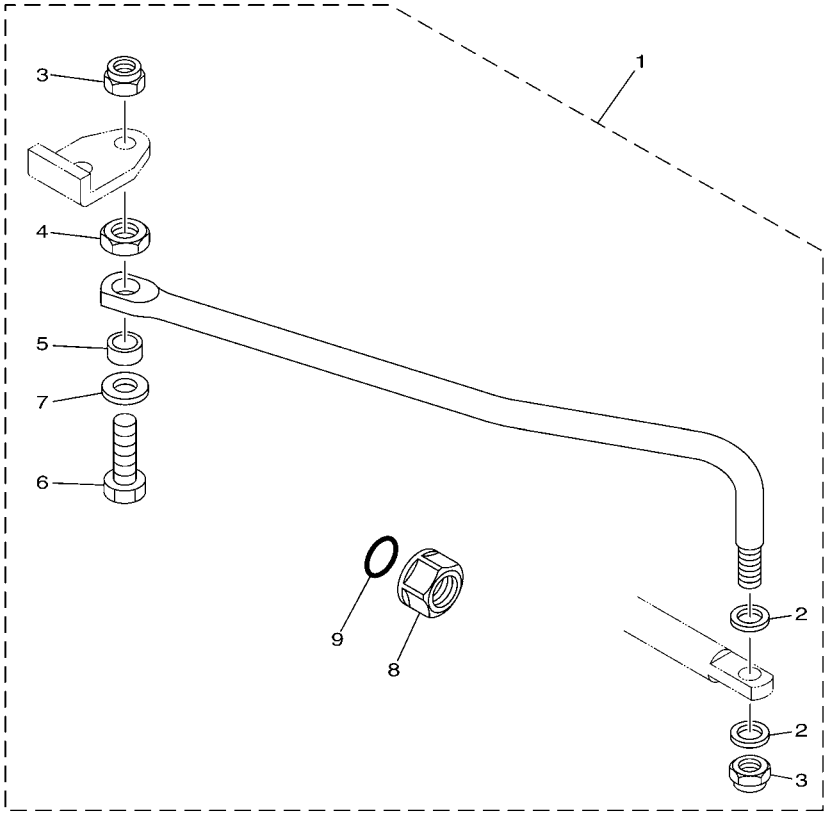

6011100-G510

FIG. 51 STEERING GUIDE 3 — FIXATION DE DIRECTION 3

REF. NO.	PART NO. N° PIECES	DESCRIPTION DESCRIPTION	2008					REMARKS REMARQUES
1	6AH–61350–00	STEERING GUIDE ATTACHMENT KIT FIXATIONS DE DIRECTION	1					
2	90201–10M20	.WASHER, PLATE .RONDELLE, PLATE	2					
3	90185–09M01	.NUT, SELF-LOCKING .ECROU,AUTO-BLOQUANT	2					
4	90170–09M03	.NUT .ECROU	1					
5	90387–10M42	.COLLAR .COLLERETTE	1					
6	6E5–61355–00	.BOLT .BOULON	1					
7	90201–10M63	.WASHER, PLATE .RONDELLE, PLATE	1					
8	6E5–43145–01	.CAP, CLAMP BRACKET .CAPUCHON, PRESSE	1					
9	93210–16275	.O-RING .JOINT TORIQUE	1					

Part No.	Applicable model
689-61350-02	20D, 25N, 25B, 30H, 30D, 40J, E40G EK40J, E25B, E30H

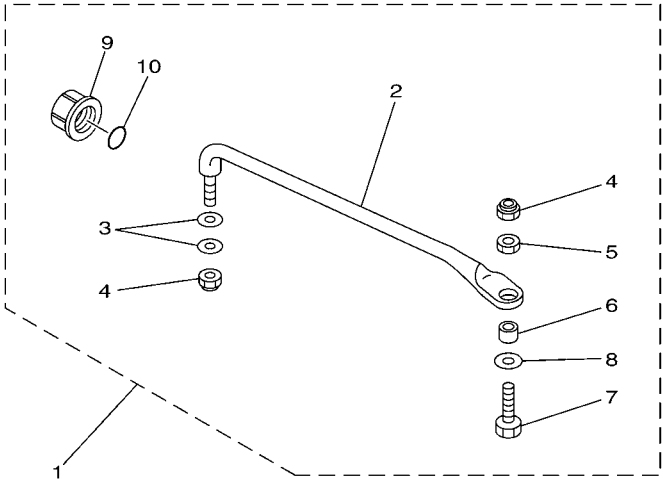

6011100-G520

FIG. 52 STEERING GUIDE 4 — FIXATION DE DIRECTION 4

REF. NO.	PART NO. N° PIECES	DESCRIPTION DESCRIPTION	2008					REMARKS REMARQUES
1	689–61350–02	STEERING GUIDE ATTACHMENT KIT FIXATIONS DE DIRECTION	1					
2	689–61351–01	.ROD, STEERING LINK .RENVOI DE DIRECTION	1					
3	90201–10M20	.WASHER, PLATE .RONDELLE, PLATE	2					
4	90185–09M01	.NUT, SELF-LOCKING .ECROU,AUTO-BLOQUANT	2					
5	90170–09M03	.NUT .ECROU	1					
6	90387–10M42	.COLLAR .COLLERETTE	1					
7	6E5–61355–00	.BOLT .BOULON	1					
8	90201–10M63	.WASHER, PLATE .RONDELLE, PLATE	1					
9	6E5–43145–01	.CAP, CLAMP BRACKET .CAPUCHON, PRESSE	1					
10	93210–16275	.O-RING .JOINT TORIQUE	1					

Part No.	Applicable model
63D-61350-00	40V, 50H (50), 40Y, FT50C, F50D

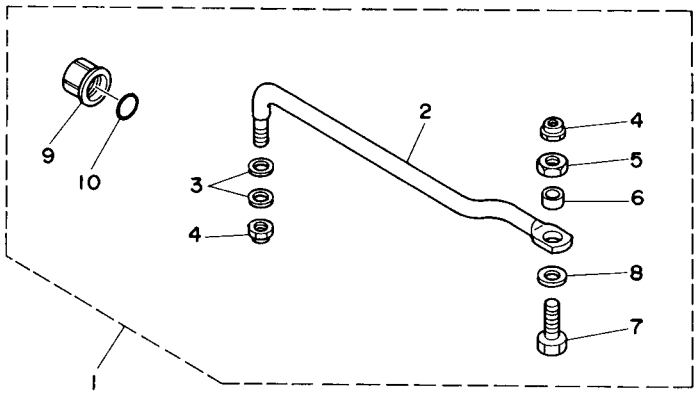

6011100-G530

FIG. 53 STEERING GUIDE 5 — FIXATION DE DIRECTION 5

REF. NO.	PART NO. N° PIECES	DESCRIPTION DESCRIPTION	2008					REMARKS REMARQUES
1	63D–61350–00	STEERING GUIDE ATTACHMENT KIT FIXATIONS DE DIRECTION	1					
2	63D–61351–00	.ROD, STEERING LINK .RENVOI DE DIRECTION	1					
3	90201–10M20	.WASHER, PLATE .RONDELLE, PLATE	2					
4	90185–09M01	.NUT, SELF-LOCKING .ECROU,AUTO-BLOQUANT	2					
5	90170–09M03	.NUT .ECROU	1					
6	90387–10M42	.COLLAR .COLLERETTE	1					
7	90101–09M01	.BOLT .BOULON	1					
8	90201–10M63	.WASHER, PLATE .RONDELLE, PLATE	1					
9	6E5–43145–01	.CAP, CLAMP BRACKET .CAPUCHON, PRESSE	1					
10	93210–16275	.O-RING .JOINT TORIQUE	1					

Part No.	Applicable model
65W-61350-00	E40X, 40X, F20A, F25A (F25), F25C, FT25B (T25), F30A (F30), F40B (F40), F50F (F50), FT50G (T50), F40D F60C (F60), FT60D (T60)

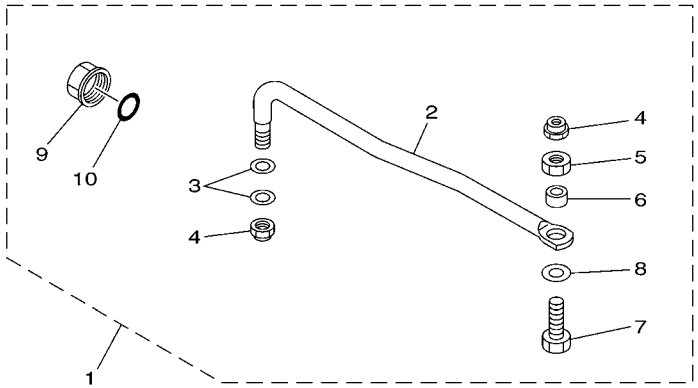

6011100-G540

FIG. 54 STEERING GUIDE 6 FIXATION DE DIRECTION 6

REF. NO.	PART NO. N° PIECES	DESCRIPTION DESCRIPTION	2008					REMARKS REMARQUES
1	65W–61350–00	STEERING GUIDE ATTACHMENT KIT FIXATIONS DE DIRECTION	1					
2	65W–61351–00	.ROD, STEERING LINK .RENVOI DE DIRECTION	1					
3	90201–10M20	.WASHER, PLATE .RONDELLE, PLATE	2					
4	90185–09M01	.NUT, SELF-LOCKING .ECROU,AUTO-BLOQUANT	2					
5	90170–09M03	.NUT .ECROU	1					
6	90387–10M42	.COLLAR .COLLERETTE	1					
7	90101–09M01	.BOLT .BOULON	1					
8	90201–10M63	.WASHER, PLATE .RONDELLE, PLATE	1					
9	6E5–43145–01	.CAP, CLAMP BRACKET .CAPUCHON, PRESSE	1					
10	93210–16275	.O-RING .JOINT TORIQUE	1					

Part No.	Applicable model
697-61350-00	55B
688-61350-10	60F, 70B (70), 75C, 90A (90) 75A, 85A, E60H

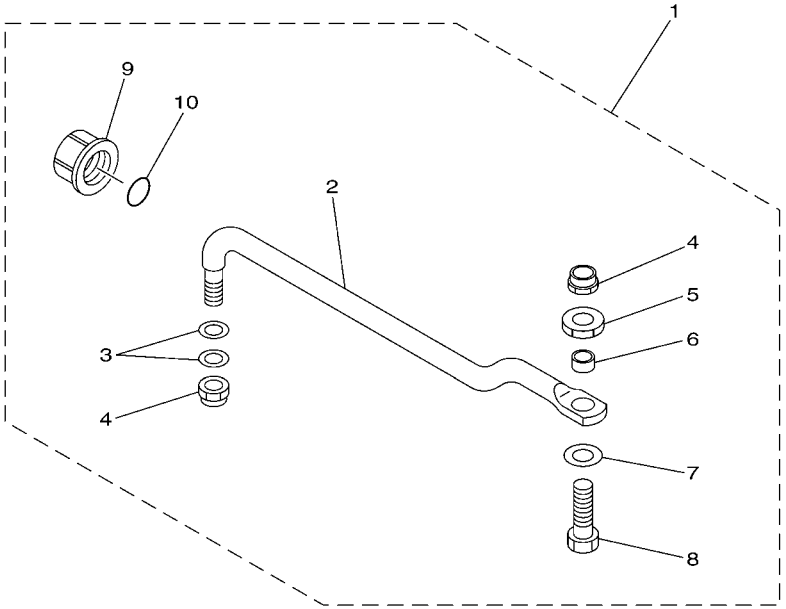

6011100-G550

FIG. 55 STEERING GUIDE 7 — FIXATION DE DIRECTION 7

REF. NO.	PART NO. N° PIECES	DESCRIPTION DESCRIPTION	2008					REMARKS REMARQUES
1	697–61350–00	STEERING GUIDE ATTACHMENT KIT FIXATIONS DE DIRECTION	1					UR UR
	688–61350–10	STEERING GUIDE ATTACHMENT KIT FIXATIONS DE DIRECTION	1					UR UR
2	697–61351–00	.ROD, STEERING LINK .RENVOI DE DIRECTION	1					FOR 697-61350-00 FOR 697-61350-00
	688–61351–10	.ROD, STEERING LINK .RENVOI DE DIRECTION	1					FOR 688-61350-10 FOR 688-61350-10
3	90201–10M20	.WASHER, PLATE .RONDELLE, PLATE	2					
4	90185–09M01	.NUT, SELF-LOCKING .ECROU,AUTO-BLOQUANT	2					
5	90170–09M03	.NUT .ECROU	1					
6	90387–10M42	.COLLAR .COLLERETTE	1					
7	90201–10M63	.WASHER, PLATE .RONDELLE, PLATE	1					
8	6E5–61355–00	.BOLT .BOULON	1					
9	6E5–43145–01	.CAP, CLAMP BRACKET .CAPUCHON, PRESSE	1					
10	93210–16275	.O-RING .JOINT TORIQUE	1					

Part No.	Applicable model
67F-61350-00	F75B (F75), F80B F90B (F90), F100D

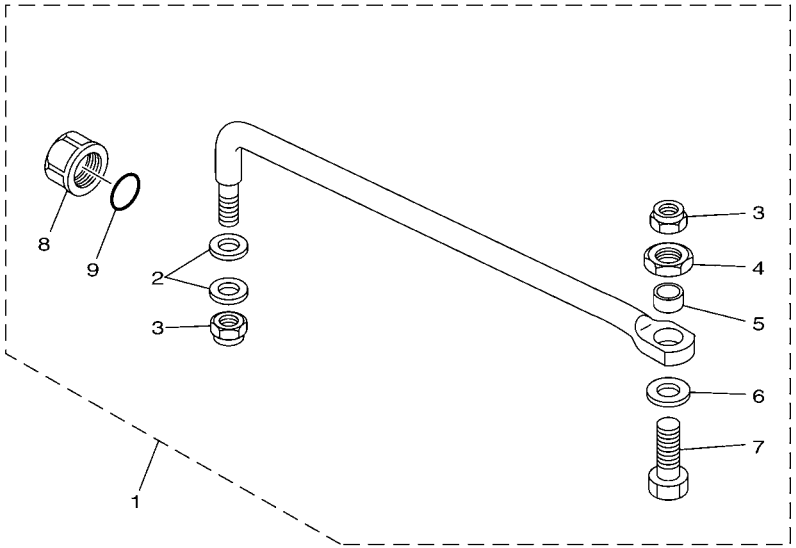

6011100-G560

FIG. 56 STEERING GUIDE 8 FIXATION DE DIRECTION 8

REF. NO.	PART NO. N° PIECES	DESCRIPTION DESCRIPTION	2008					REMARKS REMARQUES
1	67F–61350–00	STEERING GUIDE ATTACHMENT KIT FIXATIONS DE DIRECTION	1					
2	90201–10M20	.WASHER, PLATE .RONDELLE, PLATE	2					
3	90185–09M01	.NUT, SELF-LOCKING .ECROU,AUTO-BLOQUANT	2					
4	90170–09M03	.NUT .ECROU	1					
5	90387–10M42	.COLLAR .COLLERETTE	1					
6	90201–10M63	.WASHER, PLATE .RONDELLE, PLATE	1					
7	90101–09M01	.BOLT .BOULON	1					
8	6E5–43145–01	.CAP, CLAMP BRACKET .CAPUCHON, PRESSE	1					
9	93210–16275	.O-RING .JOINT TORIQUE	1					

Part No.	Applicable model
6E5-61350-02	F75C, F95A, F100B F115 – F250, 115 – 300

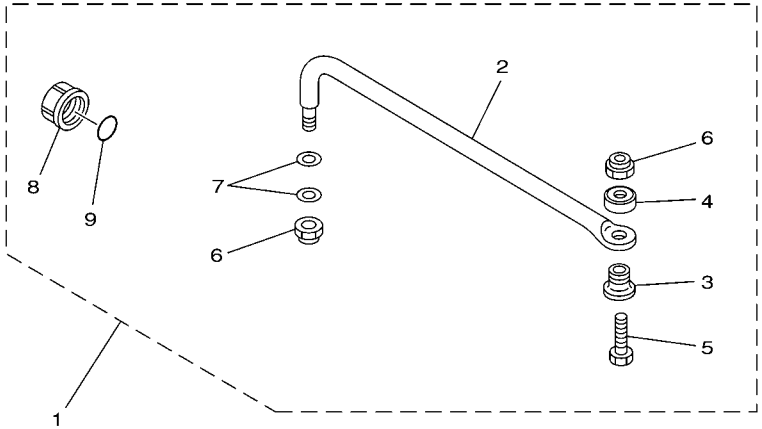

6011100-G570

FIG. 57 STEERING GUIDE 9 — FIXATION DE DIRECTION 9

REF. NO.	PART NO. N° PIECES	DESCRIPTION DESCRIPTION	2008					REMARKS REMARQUES
1	6E5–61350–02	STEERING GUIDE ATTACHMENT KIT FIXATIONS DE DIRECTION	1					
2	6E5–61351–01	.ROD, STEERING LINK .RENVOI DE DIRECTION	1					
3	90387–10M61	.COLLAR .COLLERETTE	1					
4	90560–12M01	.SPACER .ENTRETOISE	1					
5	6E5–61355–00	.BOLT .BOULON	1					
6	90185–09M01	.NUT, SELF-LOCKING .ECROU,AUTO-BLOQUANT	2					
7	90201–10M20	.WASHER, PLATE .RONDELLE, PLATE	2					
8	6E5–43145–01	.CAP, CLAMP BRACKET .CAPUCHON, PRESSE	1					
9	93210–16275	.O-RING .JOINT TORIQUE	1					

FIG. 58 STEERING GUIDE 10 FIXATION DE DIRECTION 10

Part No.	Applicable model
6E5-61301-01	40 – 300, F30 – F250

Twin engine tie-bar kit
Adjustable distance : 600 mm (23.6 in.) – 800 mm (31.5 in.)

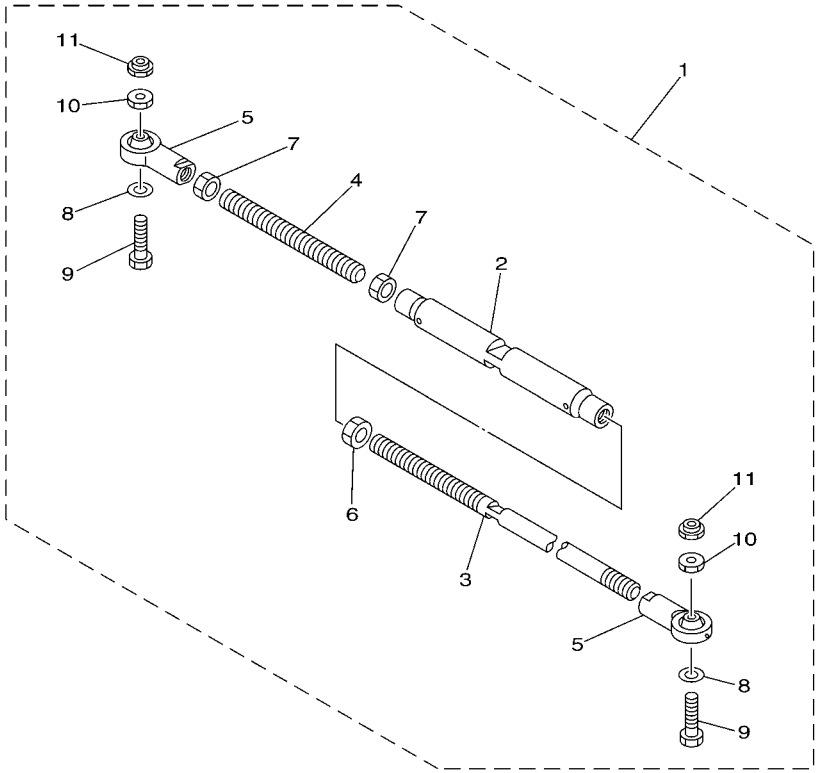

6011100-G580

REF. NO.	PART NO. N° PIECES	DESCRIPTION DESCRIPTION	2008					REMARKS REMARQUES
1	6E5–61301–01	TWIN KIT (L:600-800MM) JUMELE KIT (L:600-800MM)	1					
2	6E5–61313–00	.ADJUSTER .TENDEUR	1					
3	6E5–61311–11	.TIE BAR .BARRE D'ACCOUPLEMENT	1					
4	6E5–61315–00	.TIE BAR .BARRE D'ACCOUPLEMENT	1					
5	6E5–61303–00	.STEERING AXLE COMP. .AXLE COMP.	2					
6	90170–14M06	.NUT .ECROU	1					
7	95380–14700	.NUT .ECROU	2					
8	90201–10M76	.WASHER, PLATE .RONDELLE, PLATE	2					
9	90101–09M70	.BOLT .BOULON	2					
10	90170–09M05	.NUT .ECROU	2					
11	90185–09M01	.NUT, SELF-LOCKING .ECROU,AUTO-BLOQUANT	2					

PART NO. N° PIECES	REF. NO.
65W–26326–10	42 – 10
	44 – 17
	45 – 17
6G8–26363–00	39 – 15
	41 – 15
6G8–26364–00	39 – 16
	41 – 16
63V–42154–00	38 – 11
6L2–42154–01	39 – 6
6J8–42169–01	41 – 8
6L2–42191–01	39 – 7
63V–42192–00	38 – 15
6L2–42192–20	39 – 8
6J8–42723–51	41 – 17
6J8–42724–10	41 – 19
68T–42725–10	43 – 16
66M–42725–20	44 – 15
65W–42725–21	45 – 15
66T–42725–30	42 – 9
65W–42726–10	42 – 11
	44 – 18
	45 – 18
62Y–42727–00	44 – 16
	45 – 16
6X4–42821–00	13 – 53
6J8–42846–00	41 – 18
6E5–43145–01	49 – 8
	50 – 8
	51 – 8
	52 – 9
	53 – 9
	54 – 9
	55 – 9
	56 – 8
	57 – 8
6AU–44111–10	43 – 8
65W–44125–00	44 – 4
	45 – 4
66T–44125–01	42 – 6
65W–44142–00	44 – 2
	45 – 2
6J8–44173–02	41 – 7
6J8–44177–00	41 – 5
6X3–44191–00	12 – 73
6X6–44191–00	18 – 60
	19 – 67
	20 – 67
65W–44192–00	45 – 8

PART NO. N° PIECES	REF. NO.
66M–44192–00	44 – 8
6AH–44194–00	47 – 9
701–48101–23	1 – 1
	5 – 1
701–48101–51	1 – 1
	5 – 1
701–48101–G1	1 – 1
	5 – 1
701–48102–23	1 – 1
	5 – 1
701–48102–51	1 – 1
	5 – 1
701–48102–G1	1 – 1
	5 – 1
6X3–48111–00	12 – 58
6X0–48116–00	12 – 72
6X6–48118–00	18 – 35
	19 – 41
	20 – 41
6X5–48119–00	13 – 61
6X6–48119–01	18 – 12
6X5–48119–10	13 – 60
6X6–48119–10	19 – 13
	20 – 13
704–48119–31	10 – 59
704–48119–41	11 – 68
704–48119–B0	9 – 63
6X0–48121–00	12 – 37
6X0–48127–00	12 – 53
6X5–48127–00	13 – 34
6X6–48127–00	18 – 64
	19 – 71
	20 – 70
EL8–48127–00	9 – 25
	10 – 23
	11 – 23
	12 – 23
	18 – 11
	19 – 12
	20 – 12
6X5–48127–10	13 – 39
6X5–48127–20	13 – 41
6X0–48128–00	12 – 64
	20 – 85
6X6–48128–00	18 – 65
	19 – 72
	20 – 71
703–48128–00	13 – 35

PART NO. N° PIECES	REF. NO.
704–48128–00	9 – 2
	10 – 2
	11 – 2
	11 – 62
6X3–48129–00	12 – 67
6X5–48129–00	13 – 36
6X6–48129–00	18 – 53
	19 – 60
	20 – 60
6A5–48129–10	9 – 12
701–48130–23	1 – 1
	6 – 1
701–48130–E0	1 – 1
	6 – 1
701–48133–00	5 – 42
	6 – 42
6X0–48138–00	12 – 4
701–48138–50	5 – 39
701–48140–E0	1 – 1
	6 – 1
6X5–48144–00	13 – 29
6X6–48144–00	18 – 52
704–48144–00	9 – 53
6X5–48144–10	13 – 28
6X6–48144–10	18 – 26
	19 – 31
	20 – 31
704–48144–10	10 – 50
704–48144–20	11 – 50
6X5–48152–00	13 – 6
703–48152–00	7 – 57
	8 – 57
701–48152–11	5 – 13
	6 – 13
701–48152–20	5 – 13
	6 – 13
6X0–48153–00	12 – 47
703–48153–00	7 – 3
	8 – 3
	13 – 22
704–48153–00	9 – 59
	10 – 55
	11 – 55
701–48153–12	5 – 33
	6 – 33
6X0–48155–00	12 – 60
6X0–48156–00	12 – 65
704–48156–00	11 – 63

PART NO. N° PIECES	REF. NO.
704–48156–00	19 – 48
	20 – 48
6X6–48158–00	18 – 38
	19 – 44
	20 – 44
EL8–48158–00	12 – 30
EL8–48164–00	9 – 43
	10 – 41
	11 – 41
	12 – 38
704–48166–00	9 – 60
	10 – 56
	11 – 56
6X6–48167–00	18 – 14
704–48167–01	10 – 61
6X6–48167–10	19 – 15
	20 – 15
704–48167–11	11 – 69
6X6–48167–20	19 – 16
	20 – 16
6X6–48167–50	18 – 16
6X6–48167–60	19 – 18
	20 – 18
6X6–48171–00	18 – 9
	19 – 10
	20 – 10
6X5–48175–00	13 – 71
6X6–48175–00	18 – 46
	18 – 46
	19 – 54
	19 – 54
	20 – 54
6X6–48175–10	18 – 61
	19 – 68
6X5–48176–00	13 – 65
6X6–48176–00	18 – 20
704–48176–00	9 – 54
	10 – 51
6X6–48176–10	19 – 23
	20 – 23
	36 – 4
704–48176–10	11 – 51
6X6–48176–50	18 – 62
	19 – 69
	20 – 68
6X6–48176–60	18 – 63
	19 – 70
	20 – 69

PART NO. N° PIECES	REF. NO.
704–48178–00	11 – 66
	12 – 34
704–48178–10	9 – 64
	10 – 60
6X0–48187–00	12 – 11
6X6–48189–00	18 – 32
	19 – 38
	20 – 38
703–48189–00	7 – 17
	8 – 17
	13 – 19
701–48189–11	5 – 31
	6 – 31
EL8–48191–00	9 – 18
	10 – 16
	11 – 16
	12 – 19
703–48192–00	9 – 55
	12 – 44
704–48192–00	9 – 46
	10 – 44
	11 – 44
704–48192–P0	10 – 52
	11 – 52
6X0–48193–00	12 – 63
6X6–48193–00	18 – 34
	19 – 40
	20 – 40
704–48193–00	9 – 50
	12 – 42
701–48196–11	5 – 7
	6 – 7
701–48197–10	5 – 3
	6 – 3
703–48198–00	7 – 14
	8 – 14
	13 – 16
	18 – 33
	19 – 39
	20 – 39
701–48198–10	5 – 15
	6 – 15
6X6–481A0–01	18 – 24
	19 – 29
6X6–481A0–11	20 – 29
6X6–481A0–21	19 – 77
6X6–481A0–31	20 – 78
703–48201–16	2 – 1

PART NO. N° PIECES	REF. NO.
703–48201–16	8 – 1
703–48201–A3	2 – 1
	8 – 1
703–48202–15	2 – 1
	8 – 1
703–48203–15	2 – 1
	8 – 1
703–48203–A3	2 – 1
	8 – 1
704–48203–P1	3 – 2
	10 – 1
703–48204–13	2 – 1
	7 – 1
6X6–48205–00	15 – 1
	18 – 1
6X6–48205–10	15 – 1
	18 – 1
703–48205–17	2 – 1
	8 – 1
6X6–48205–20	15 – 1
	18 – 1
703–48205–A5	2 – 1
	8 – 1
704–48205–B1	3 – 1
	9 – 1
704–48205–P1	3 – 2
	10 – 1
6X3–48206–01	4 – 1
	12 – 1
704–48206–P1	3 – 2
	10 – 1
6X6–48207–00	16 – 1
	19 – 1
6X5–48207–01	4 – 2
	13 – 1
6X6–48207–10	16 – 1
	19 – 1
703–48207–17	2 – 1
	8 – 1
6X6–48207–20	16 – 1
	19 – 1
703–48207–A5	2 – 1
	8 – 1
704–48207–P1	3 – 3
	11 – 1
6X6–48208–20	17 – 1
	20 – 1
6X6–48208–30	17 – 1

PART NO. N° PIECES	REF. NO.
6X6–48208–30	20 – 1
703–48208–A4	2 – 1
	8 – 1
703–48210–16	2 – 1
	7 – 1
6X0–48211–00	12 – 25
703–48211–01	7 – 61
	8 – 61
6X6–48211–10	20 – 86
6X6–48212–00	18 – 25
	19 – 30
	20 – 30
703–48212–00	7 – 58
	8 – 58
6X5–48213–00	13 – 58
6X6–48213–00	18 – 43
	19 – 51
	20 – 51
701–48213–00	5 – 19
	6 – 19
703–48213–00	7 – 59
	8 – 59
6X5–48214–00	13 – 63
6X5–48214–10	13 – 64
6X5–48215–00	13 – 80
6X6–48215–00	18 – 15
703–48215–00	7 – 43
	8 – 43
704–48215–00	9 – 14
6X5–48215–10	13 – 81
6X6–48215–10	19 – 17
6X6–48215–20	20 – 17
704–48215–20	10 – 12
704–48215–30	11 – 12
6X6–48216–00	18 – 21
703–48216–00	7 – 65
6X6–48216–10	19 – 25
703–48216–10	7 – 66
6X6–48216–20	20 – 25
703–48218–00	8 – 64
6X5–48219–00	13 – 67
6X6–48219–00	18 – 17
703–48219–00	7 – 30
	8 – 30
6X6–48219–10	19 – 19
	20 – 19
6X6–48219–20	19 – 20
	20 – 20

PART NO. N° PIECES	REF. NO.
704–48219–B0	9 – 52
704–48219–P0	10 – 49
	11 – 49
703–48220–15	2 – 1
	7 – 1
6X3–48221–00	12 – 55
6X5–48221–00	13 – 26
6X6–48221–00	18 – 3
	19 – 3
	20 – 3
701–48221–00	5 – 6
	6 – 6
703–48221–00	7 – 56
	8 – 56
6X5–48221–10	13 – 27
704–48221–B0	9 – 62
704–48221–P0	10 – 58
	11 – 67
6X5–48222–00	13 – 31
6X6–48222–00	18 – 4
	19 – 4
	20 – 4
701–48222–00	5 – 27
	6 – 27
703–48222–00	7 – 27
	8 – 27
6X3–48222–01	12 – 48
6X5–48222–10	13 – 33
6X6–48222–10	19 – 6
	20 – 6
703–48222–10	7 – 27
	8 – 27
6X5–48222–20	13 – 66
6X5–48222–30	13 – 85
704–48222–B0	9 – 34
704–48222–P0	10 – 32
	11 – 32
6X0–48223–00	12 – 54
703–48223–00	7 – 28
	8 – 28
6X5–48224–00	13 – 13
6X6–48224–00	18 – 5
	19 – 5
	20 – 5
703–48224–00	7 – 55
	8 – 55
6X6–48224–10	18 – 6
	19 – 7

PART NO. N° PIECES	REF. NO.
6X6–48224–10	20 – 7
6X3–48225–00	12 – 57
6X5–48225–00	13 – 68
6X6–48225–00	19 – 24
	20 – 24
703–48225–00	7 – 29
	8 – 29
6X3–48225–10	12 – 56
6X3–48225–20	9 – 45
	10 – 43
	11 – 43
	12 – 59
703–48226–00	7 – 26
	8 – 26
703–48227–00	7 – 24
	8 – 24
	12 – 49
6X5–48228–00	13 – 73
6X6–48228–00	18 – 44
	19 – 52
	20 – 52
6X5–48229–00	13 – 30
701–48229–00	5 – 26
	6 – 26
6X5–48229–10	13 – 32
704–48229–B1	9 – 37
704–48229–P1	10 – 35
	11 – 35
704–48229–R0	10 – 35
	11 – 60
703–48230–15	2 – 1
	7 – 1
704–48231–00	10 – 25
	11 – 25
EL8–48231–00	9 – 27
	12 – 26
6X5–48232–00	13 – 2
701–48232–00	5 – 30
	6 – 30
703–48232–00	7 – 62
	8 – 62
EL8–48232–00	9 – 42
704–48232–P1	10 – 40
	11 – 40
704–48233–00	10 – 53
	11 – 53
EL8–48233–00	9 – 56
	12 – 45

PART NO. N° PIECES	REF. NO.
6X6–48233–01	18 – 28
	19 – 34
	20 – 34
6X6–48234–00	18 – 36
	19 – 42
	20 – 42
701–48234–00	5 – 5
	6 – 5
703–48234–00	7 – 18
	8 – 18
	13 – 20
704–48234–00	10 – 48
	11 – 48
EL8–48234–00	9 – 51
	12 – 43
701–48235–00	5 – 2
	6 – 2
702–48235–00	9 – 57
	12 – 46
703–48235–00	7 – 4
	8 – 4
	13 – 5
704–48235–00	10 – 54
	11 – 54
6X6–48236–00	18 – 31
	19 – 37
	20 – 37
701–48236–00	5 – 8
	6 – 8
703–48236–00	7 – 16
	8 – 16
	13 – 18
6X6–48237–00	18 – 30
	19 – 36
	20 – 36
702–48237–00	5 – 9
	6 – 9
6X6–48238–00	18 – 29
	19 – 35
	20 – 35
702–48238–00	5 – 10
	6 – 10
703–48238–00	7 – 22
	8 – 22
	13 – 24
704–48238–00	9 – 41
	10 – 39
	11 – 39

PART NO. N° PIECES	REF. NO.
704–48238–00	12 – 36
6X6–48241–00	18 – 55
	19 – 62
	20 – 62
EL8–48241–00	10 – 26
	11 – 26
	12 – 27
EL8–48241–10	9 – 28
704–48242–00	9 – 44
6X6–48242–01	18 – 27
	19 – 32
	20 – 32
704–48242–10	10 – 42
	11 – 42
EL8–48242–10	12 – 39
6X6–48242–11	19 – 33
	20 – 33
701–48243–00	5 – 14
	6 – 14
703–48243–00	7 – 15
	8 – 15
	13 – 17
703–48244–00	7 – 21
	8 – 21
	13 – 23
EL8–48244–00	9 – 32
	10 – 30
	11 – 30
	12 – 32
703–48245–00	7 – 11
	8 – 11
EL8–48245–00	9 – 33
	10 – 31
	11 – 31
	12 – 33
6X6–48245–01	18 – 56
	19 – 63
	20 – 63
6X5–48246–00	13 – 62
701–48246–00	5 – 24
	6 – 24
	9 – 5
	10 – 5
	11 – 5
703–48246–00	7 – 23
	8 – 23
	13 – 74
701–48248–00	5 – 12

PART NO. N° PIECES	REF. NO.
701–48248–00	6 – 12
	7 – 13
	8 – 13
	9 – 40
	10 – 38
	11 – 38
	12 – 35
	13 – 15
701–48249–00	5 – 11
	6 – 11
703–48250–17	2 – 1
	7 – 1
EL8–48251–00	9 – 3
	10 – 3
	11 – 3
	12 – 2
701–48252–00	5 – 4
	6 – 4
703–48252–00	7 – 12
	8 – 12
	13 – 14
EL8–48254–00	10 – 27
	11 – 27
	12 – 28
EL8–48254–10	9 – 29
701–48255–00	5 – 21
	6 – 21
EL8–48259–00	9 – 7
	10 – 7
	11 – 7
	12 – 7
6X0–48261–00	12 – 18
6X5–48261–00	13 – 4
701–48261–00	5 – 37
704–48261–00	9 – 17
	10 – 15
	11 – 15
703–48261–01	8 – 2
701–48261–10	5 – 37
703–48261–11	7 – 2
701–48261–20	6 – 37
6X0–48262–00	12 – 9
704–48262–00	9 – 8
	10 – 8
	11 – 8
702–48263–00	12 – 40
6X0–48264–00	12 – 10
6X5–48264–00	13 – 8

PART NO. N° PIECES	REF. NO.
6X6–48264–00	18 – 39
	19 – 45
	20 – 45
703–48264–00	7 – 6
	8 – 6
704–48264–00	9 – 9
	10 – 9
	11 – 9
6X0–48265–00	12 – 8
6X5–48265–00	13 – 11
703–48265–00	7 – 9
	8 – 9
704–48265–00	9 – 4
	10 – 4
	11 – 4
701–48266–00	5 – 29
	6 – 29
704–48266–00	9 – 10
	12 – 13
6X5–48267–00	13 – 43
	13 – 83
6X6–48267–00	18 – 37
	19 – 43
	20 – 43
701–48268–00	5 – 18
	6 – 18
703–48268–00	7 – 5
	8 – 5
	13 – 7
6X5–48271–00	13 – 3
701–48271–00	5 – 34
	6 – 34
703–48271–00	7 – 60
	8 – 60
704–48271–00	10 – 22
	11 – 22
EL8–48271–00	12 – 22
701–48271–10	5 – 34
	6 – 34
EL8–48271–10	9 – 24
703–48272–17	2 – 1
	7 – 1
EL8–48279–00	9 – 49
	10 – 47
	11 – 47
	12 – 41
701–48280–00	5 – 48
	6 – 48

PART NO. N° PIECES	REF. NO.
6X0–48281–00	12 – 62
703–48281–00	7 – 31
	8 – 31
704–48281–00	9 – 15
	10 – 13
	11 – 13
	12 – 70
EL8–48281–00	9 – 13
	10 – 11
	11 – 11
703–48293–10	7 – 41
	8 – 41
701–48281–10	5 – 16
	6 – 16
701–48282–00	5 – 28
	6 – 28
703–48282–00	7 – 32
	8 – 32
704–48282–00	9 – 58
701–48283–00	5 – 46
	6 – 46
704–48283–00	9 – 19
	10 – 17
	11 – 17
	19 – 49
	20 – 49
703–48284–00	7 – 52
	8 – 52
704–48284–00	9 – 61
703–48284–10	7 – 52
	8 – 52
704–48284–P0	10 – 57
	11 – 57
704–48285–10	11 – 65
701–48287–00	5 – 44
	6 – 44
	7 – 42
	8 – 42
	12 – 66
702–48287–00	7 – 64
	8 – 65
704–48287–00	9 – 22
	10 – 20
	11 – 20
	13 – 46
	18 – 40
	19 – 46
	20 – 46
6X0–48288–00	12 – 52

PART NO. N° PIECES	REF. NO.
702–48288–00	5 – 23
	6 – 23
701–48289–00	5 – 17
	6 – 17
703–48291–10	7 – 39
	8 – 39
6X5–48293–00	13 – 87
703–48293–00	7 – 41
	8 – 41
704–48293–00	3 – 4
703–48293–10	7 – 41
	8 – 41
704–48293–20	3 – 4
704–48293–30	3 – 7
701–48310–10	14 – 1
701–48310–20	14 – 1
701–48310–40	14 – 1
701–48310–60	14 – 1
701–48310–80	14 – 1
701–48310–90	14 – 1
6X5–48317–00	13 – 76
6X5–48317–10	13 – 77
701–48320–00	14 – 1
701–48320–20	14 – 1
701–48320–30	14 – 1
701–48320–40	14 – 1
701–48320–50	14 – 1
701–48320–60	14 – 1
701–48320–70	14 – 1
701–48320–80	14 – 1
701–48320–90	14 – 1
647–48330–50	37 – 10
648–48330–50	40 – 15
617–48331–91	37 – 14
	40 – 19
6X5–48338–00	13 – 78
6X5–48338–10	13 – 79
647–48340–50	37 – 16
648–48340–50	40 – 9
663–48344–00	38 – 8
	42 – 2
	43 – 12
	43 – 14
	44 – 12
	45 – 12
703–48345–01	5 – 36
	6 – 36
	7 – 19

PART NO. N° PIECES	REF. NO.
703–48345–01	8 – 19
	9 – 21
	10 – 19
	11 – 19
	12 – 21
	13 – 21
647–48346–50	37 – 17
648–48346–50	40 – 16
617–48346–90	37 – 11
	40 – 10
701–48350–00	14 – 1
701–48350–10	14 – 1
701–48350–20	14 – 1
701–48350–30	14 – 1
701–48350–40	14 – 1
701–48350–50	14 – 1
701–48350–60	14 – 1
6X5–48351–00	13 – 54
6X5–48354–00	13 – 59
6X5–48358–00	13 – 25
701–48358–00	5 – 38
	6 – 38
703–48358–00	7 – 20
	8 – 20
	9 – 26
	10 – 24
	11 – 24
	12 – 24
617–48361–91	37 – 20
	40 – 13
63V–48501–00	38 – 1
65W–48501–00	45 – 1
66M–48501–00	44 – 1
6AU–48501–00	43 – 1
66T–48501–01	42 – 1
689–48501–01–4D	40 – 1
655–48501–02	37 – 1
6J8–48501–03–4D	41 – 1
655–48501–10	37 – 1
6J8–48501–11	41 – 1
6L2–48501–11	39 – 1
689–48501–21–4D	40 – 1
700–48510–12	37 – 22
	40 – 21
	48 – 13
65W–48511–00	42 – 7
	45 – 19
	47 – 10

PART NO. N° PIECES	REF. NO.
68V–48511–00	47 – 14
6AH–48511–00	47 – 5
6G8–48511–00	48 – 14
6L2–48511–00	46 – 1
63D–48511–00–4D	46 – 11
67F–48511–00–8D	47 – 11
63V–48511–01	44 – 19
	47 – 1
676–48511–01	46 – 6
689–48511–01	40 – 22
	48 – 9
6J8–48511–01–4D	48 – 8
63D–48511–10	46 – 11
65W–48511–10	47 – 10
676–48511–10	37 – 23
	48 – 1
69G–48511–10	48 – 17
6G8–48511–10	48 – 5
688–48511–11–4D	46 – 12
6J8–48511–51–4D	46 – 5
63V–48531–00	38 – 2
68T–48531–00	43 – 2
6J8–48531–00	41 – 9
6L2–48531–00	39 – 11
689–48531–50	40 – 2
655–48531–51	37 – 2
6J8–48532–00	41 – 10
689–48532–50	40 – 3
63V–48534–00	38 – 18
6J8–48534–00	41 – 3
6L2–48534–01	39 – 3
647–48534–50	37 – 5
648–48534–50–4D	40 – 6
6H3–48538–00	42 – 4
	44 – 14
	45 – 14
682–48538–50	38 – 3
	39 – 12
	41 – 11
	43 – 3
63V–48544–00	38 – 20
6J8–48544–01	41 – 4
6L2–48544–01	39 – 2
6E5–61301–01	58 – 1
6E5–61303–00	58 – 5
6E5–61311–11	58 – 3
6E5–61313–00	58 – 2
6E5–61315–00	58 – 4

PART NO. N° PIECES	REF. NO.
63D–61350–00	53 – 1
63V–61350–00	49 – 1
65W–61350–00	54 – 1
67F–61350–00	56 – 1
697–61350–00	55 – 1
6AH–61350–00	51 – 1
689–61350–02	52 – 1
6E5–61350–02	57 – 1
688–61350–10	55 – 1
68T–61350–10	50 – 1
63D–61351–00	53 – 2
65W–61351–00	54 – 2
697–61351–00	55 – 2
689–61351–01	52 – 2
6E5–61351–01	57 – 2
688–61351–10	55 – 2
6E5–61355–00	49 – 6
	50 – 6
	51 – 6
	52 – 7
	55 – 8
	57 – 5
6X6–81145–00	18 – 41
	19 – 74
	20 – 73
6X6–81146–00	18 – 66
	19 – 73
	20 – 72
6X1–81870–00	23 – 2
	28 – 2
	30 – 2
68V–81950–00	27 – 8
	29 – 12
704–81950–10	11 – 58
	13 – 72
	18 – 59
	19 – 66
	20 – 66
6X3–81971–00	33 – 1
6X3–81971–10	33 – 2
6K1–81980–00	25 – 18
703–82119–00	29 – 11
688–82388–00	33 – 5
6X5–82507–00	29 – 10
6Y8–82507–00	27 – 9
61B–82510–01	26 – 4
6X5–82510–01	29 – 2
6R5–82510–02	22 – 4

NUMERICAL INDEX
INDEX NUMERIQUE

PART NO. N° PIECES	REF. NO.
6Y8–82510–02	27 – 3
64D–82510–03	31 – 4
703–82510–03	8 – 44
6K1–82510–06	25 – 3
704–82510–07	21 – 4
	24 – 2
	32 – 1
703–82510–12	8 – 44
703–82510–33	7 – 44
	8 – 44
703–82510–43	7 – 44
	8 – 44
6X6–8252S–00	20 – 82
6X6–8252V–00	18 – 58
	19 – 65
	20 – 65
703–82531–00	7 – 46
	8 – 46
6K1–82532–00	21 – 6
	24 – 4
	25 – 5
	31 – 6
	32 – 3
6X5–82540–00	13 – 47
6X6–82540–00	18 – 54
	19 – 61
	20 – 61
703–82540–00	7 – 50
	8 – 50
704–82540–00	12 – 14
6X6–82540–10	19 – 76
	20 – 75
704–82540–20	9 – 11
	10 – 10
704–82540–30	11 – 10
704–82541–10	12 – 71
703–82542–00	7 – 63
	8 – 63
	8 – 63
	8 – 63
6X6–82545–00	18 – 57
	19 – 64
	20 – 64
6X1–82550–00	23 – 3
	28 – 3
	30 – 3
682–82556–00	5 – 40
	6 – 40

PART NO. N° PIECES	REF. NO.
682–82556–00	7 – 48
	8 – 48
	12 – 69
	21 – 8
	22 – 7
	23 – 5
	24 – 6
	25 – 7
	26 – 7
	27 – 6
	28 – 5
	29 – 5
	30 – 5
	31 – 20
	32 – 11
	32 – 13
	33 – 3
6X6–82563–00	18 – 2
	19 – 2
	20 – 2
6X3–82563–01	12 – 51
6X5–82563–01	13 – 48
703–82563–02	7 – 55
	8 – 55
688–82563–10	33 – 4
6X6–82563–10	19 – 26
	20 – 26
6X5–82563–11	13 – 49
703–82563–12	7 – 55
	8 – 55
6X6–82563–20	19 – 75
	20 – 74
6X5–82563–21	13 – 50
6X6–82563–30	20 – 76
6X5–82563–31	13 – 51
704–82563–41	9 – 36
	10 – 34
704–82563–51	11 – 34
704–82563–H1	11 – 61
704–82563–J1	11 – 64
6X6–82570–00	15 – 3
	23 – 1
6X5–82570–01	17 – 2
	29 – 1
6Y8–82570–02	16 – 2
	27 – 1
61B–82570–03	26 – 1
64D–82570–03	31 – 1

PART NO. N° PIECES	REF. NO.
6R5–82570–05	15 – 2
	22 – 1
6K1–82570–08	25 – 1
704–82570–08	21 – 1
64D–82570–10	31 – 16
6X6–82570–10	16 – 3
	28 – 1
64D–82570–20	31 – 1
6X6–82570–20	17 – 3
	30 – 1
64D–82570–30	31 – 16
6X6–82570–A0	15 – 4
	16 – 4
	17 – 4
	23 – 7
	28 – 7
	29 – 13
	30 – 7
64D–82571–00	31 – 2
6X5–82571–00	29 – 6
6Y8–82571–01	27 – 2
6K1–82571–02	25 – 2
	26 – 2
704–82571–02	21 – 2
	22 – 2
64D–82571–10	31 – 17
64D–82575–00	31 – 19
6K1–82575–00	25 – 6
	26 – 6
	27 – 5
	28 – 4
6X3–82575–00	12 – 68
6X5–82575–00	29 – 4
6X6–82575–00	30 – 4
688–82575–01	7 – 47
	8 – 47
	21 – 7
	22 – 6
	23 – 4
	24 – 5
	32 – 10
64D–82575–10	31 – 19
	32 – 12
701–82575–53	5 – 39
	6 – 39
676–82577–00	8 – 45
	22 – 5
	26 – 5

PART NO. N° PIECES	REF. NO.
676–82577–00	27 – 4
	29 – 3
703–82577–00	7 – 45
	8 – 45
	21 – 5
	24 – 3
	25 – 4
	31 – 5
	32 – 2
6X3–8257B–00	32 – 4
704–8257C–00	24 – 1
689–8257Y–00	5 – 41
	6 – 41
64D–82581–00	21 – 9
	22 – 8
	24 – 7
	27 – 10
	31 – 7
	32 – 5
6X5–82581–00	29 – 8
6X6–82581–00	20 – 84
6X6–82584–00	20 – 83
688–82586–11	34 – 6
688–82586–21	7 – 49
	8 – 49
688–82586–31	34 – 6
688–82586–50	34 – 1
64D–82588–00	31 – 3
61B–82588–01	26 – 3
6R5–82588–01	21 – 3
	22 – 3
64D–82588–10	31 – 18
6X3–8258A–00	34 – 2
703–8258A–00	34 – 3
61B–8258A–01	34 – 2
688–8258A–10	34 – 7
6X3–8258A–10	34 – 2
6X6–8258A–10	35 – 1
688–8258A–20	7 – 49
	8 – 49
	34 – 5
6X6–8258A–20	35 – 1
688–8258A–30	34 – 7
6X6–8258A–30	35 – 1
6K1–8258A–40	34 – 2
6X6–8258A–40	35 – 1
688–8258A–50	34 – 2
688–8258A–60	34 – 2

PART NO. N° PIECES	REF. NO.
6X6–8258A–A0	35 – 2
6X6–8258A–B0	35 – 3
6X6–8258A–C0	35 – 2
6X6–8258A–D0	35 – 3
6X5–82590–00	13 – 82
6X6–82590–00	18 – 51
6X6–82590–10	19 – 59
704–82590–10	11 – 59
6X6–82590–20	18 – 51
	36 – 2
6X6–82590–30	19 – 59
	36 – 2
6X6–82590–50	18 – 51
6X6–82590–60	19 – 59
6X6–82590–80	20 – 59
6X6–82590–90	20 – 59
6X6–82591–00	20 – 81
703–82591–00	7 – 53
	7 – 53
	8 – 53
	8 – 53
	13 – 52
	18 – 47
	18 – 47
	19 – 55
	19 – 55
	20 – 55
	36 – 3
	36 – 3
703–82592–00	7 – 54
	8 – 54
701–82594–00	5 – 47
	6 – 47
703–82594–00	7 – 25
	8 – 25
704–82594–00	9 – 35
	10 – 33
	11 – 33
6X6–8259E–00	18 – 18
	19 – 21
	20 – 21
6X6–8259F–00	20 – 77
6R5–83383–00	22 – 12
	23 – 6
	26 – 12
	27 – 7
	28 – 6
	30 – 6

PART NO. N° PIECES	REF. NO.
6R5–83383–00	32 – 9
6X4–83383–00	29 – 9
6X5–83383–00	29 – 7
703–83383–02	7 – 51
	8 – 51
688–83383–11	21 – 13
	24 – 11
	25 – 12
	31 – 11
703–83383–B0	8 – 51
6K1–83614–01	25 – 8
	26 – 8
6X6–84301–00	18 – 13
6X6–84301–10	19 – 14
6X6–84301–20	20 – 14
6X6–85557–00	20 – 80
6X6–85590–00	18 – 45
	19 – 53
	20 – 53
	36 – 1
	36 – 1
6X6–85590–10	18 – 45
	19 – 53
704–85721–00	34 – 4
61B–85830–00	26 – 13
6K1–85830–01	25 – 13
60R–G4111–10	43 – 8
60R–G8501–00	43 – 1
90101–09M01	53 – 7
	54 – 7
	56 – 7
90101–09M70	58 – 9
90105–06M23	39 – 14
90109–06M29	41 – 13
90116–10175	47 – 12
	47 – 15
90149–05M05	21 – 14
	22 – 13
	25 – 19
	26 – 18
	31 – 12
	31 – 21
90159–05M25	38 – 21
90170–09M03	49 – 4
	50 – 4
	51 – 4
	52 – 5
	53 – 5

NUMERICAL INDEX
INDEX NUMERIQUE

PART NO. N° PIECES	REF. NO.
90170–09M03	54 – 5
	55 – 5
	56 – 4
90170–09M05	58 – 10
90170–14M06	58 – 6
90179–06M24	41 – 14
90185–08057	44 – 21
	47 – 4
	47 – 8
	48 – 20
90185–09M01	49 – 3
	50 – 3
	51 – 3
	52 – 4
	53 – 4
	54 – 4
	55 – 4
	56 – 3
	57 – 6
	58 – 11
90185–10051	37 – 26
	40 – 25
	46 – 2
	47 – 13
	47 – 16
	48 – 4
	48 – 12
90201–04M06	38 – 16
90201–05M06	44 – 9
	45 – 9
90201–06M31	44 – 6
	45 – 6
90201–08M12	38 – 10
90201–10120	42 – 8
	45 – 20
90201–10M02	38 – 14
90201–10M20	49 – 2
	50 – 2
	51 – 2
	52 – 3
	53 – 3
	54 – 3
	55 – 3
	56 – 2
	57 – 7
90201–10M63	49 – 7
	50 – 7
	51 – 7

PART NO. N° PIECES	REF. NO.
90201–10M63	52 – 8
	53 – 8
	54 – 8
	55 – 7
	56 – 6
90201–10M76	58 – 8
90202–05088	39 – 9
90206–10M04	38 – 13
90254–03M03	41 – 6
90254–03M04	42 – 5
90254–03M05	44 – 3
	45 – 3
90386–10009	38 – 22
	39 – 4
90386–10025	38 – 12
90387–06M29	44 – 5
	45 – 5
90387–10M42	49 – 5
	50 – 5
	51 – 5
	52 – 6
	53 – 6
	54 – 6
	55 – 6
	56 – 5
90387–10M61	57 – 3
90468–10005	44 – 10
	45 – 10
90468–18008	38 – 9
	42 – 3
	43 – 13
	43 – 15
	44 – 11
	44 – 13
	45 – 11
	45 – 13
90501–10071	37 – 13
	40 – 18
90501–10264	37 – 19
	40 – 12
90560–12M01	57 – 4
91490–20010	38 – 17
	39 – 10
91690–30012	37 – 15
	37 – 21
	38 – 4
	39 – 13
	40 – 14

PART NO. N° PIECES	REF. NO.
91690–30012	40 – 20
	41 – 12
	43 – 4
92780–06020	9 – 30
	10 – 28
	11 – 28
	12 – 29
92780–06025	5 – 20
	6 – 20
92903–05100	21 – 11
	22 – 10
	22 – 15
	24 – 9
	27 – 12
	31 – 9
	32 – 7
92903–05600	22 – 16
92990–05100	21 – 16
	25 – 10
	25 – 21
	26 – 10
	26 – 20
	31 – 14
	31 – 23
92990–05200	13 – 84
	18 – 19
	19 – 22
	20 – 22
92990–05300	9 – 38
	10 – 36
	11 – 36
	12 – 61
	13 – 70
	18 – 8
	19 – 9
	20 – 9
92990–05600	21 – 17
	25 – 22
	26 – 21
	31 – 15
	31 – 24
92990–06100	25 – 16
	26 – 16
92990–06300	5 – 25
	6 – 25
	9 – 48
	10 – 46
	11 – 46

PART NO. N° PIECES	REF. NO.
92990–06600	25 – 17
	26 – 17
92990–08100	41 – 2
92990–08200	13 – 38
92990–08600	7 – 34
	8 – 34
	13 – 69
	18 – 10
	19 – 11
	20 – 11
	37 – 12
	37 – 18
	40 – 11
	40 – 17
92990–10100	46 – 8
92990–10600	12 – 6
	37 – 25
	40 – 24
	46 – 3
	46 – 9
	48 – 3
	48 – 11
92995–05600	37 – 7
	43 – 11
92995–06600	37 – 4
	38 – 6
	40 – 5
	40 – 8
	43 – 6
	48 – 7
	48 – 16
92995–08600	47 – 3
	47 – 7
	48 – 19
92D80–05016	18 – 23
	19 – 28
	20 – 28
93210–12327	43 – 9
93210–16275	49 – 9
	50 – 9
	51 – 9
	52 – 10
	53 – 10
	54 – 10
	55 – 10
	56 – 9
	57 – 9
93430–06024	5 – 35

PART NO. N° PIECES	REF. NO.
93430–06024	6 – 35
	7 – 10
	8 – 10
	9 – 6
	10 – 6
	11 – 6
	12 – 5
	13 – 12
95303–05600	22 – 14
95303–05700	21 – 12
	22 – 11
	24 – 10
	27 – 13
	31 – 10
	32 – 8
95380–05600	7 – 7
	8 – 7
	9 – 23
	10 – 21
	11 – 21
	13 – 9
	18 – 50
	19 – 58
	20 – 58
	21 – 15
	25 – 11
	25 – 20
	26 – 11
	26 – 19
	31 – 13
	31 – 22
95380–06600	5 – 45
	6 – 45
	7 – 40
	8 – 40
	9 – 39
	10 – 37
	11 – 37
	12 – 12
	13 – 75
	25 – 15
	26 – 15
	37 – 9
	38 – 7
	43 – 7
95380–10600	46 – 10
95380–14700	58 – 7
95780–06300	13 – 44

PART NO. N° PIECES	REF. NO.
95780–08300	38 – 19
	39 – 5
97075–08035	47 – 2
	48 – 18
97075–10040	37 – 24
	40 – 23
	46 – 4
	46 – 7
	48 – 2
	48 – 10
97090–06045	37 – 8
97095–05016	43 – 10
97095–05020	37 – 6
97095–06012	40 – 7
	43 – 5
97095–06016	38 – 5
	40 – 4
	48 – 6
	48 – 15
97095–06018	37 – 3
97095–08025	47 – 6
97303–05012	21 – 10
	22 – 9
	24 – 8
	27 – 11
	31 – 8
	32 – 6
97380–05025	7 – 8
	8 – 8
	13 – 10
97380–06018	9 – 20
	10 – 18
	11 – 18
	12 – 20
97380–08030	7 – 33
	8 – 33
	13 – 37
97390–06018	5 – 22
	6 – 22
97575–08535	44 – 20
97595–06525	44 – 7
	45 – 7
97780–05130	13 – 57
97780–40116	33 – 6
97780–50145	3 – 6
	3 – 9
	18 – 48
	19 – 56

PART NO. N° PIECES	REF. NO.
97780–50145	20 – 56
97890–05016	9 – 65
	10 – 62
	10 – 62
	11 – 70
	12 – 3
97890–05025	9 – 16
	10 – 14
	11 – 14
	12 – 17
97890–06018	9 – 47
	10 – 45
	11 – 45
97890–06035	12 – 64
98580–03015	7 – 38
	8 – 38
	12 – 15
	13 – 42
98580–04006	7 – 36
	8 – 36
	12 – 31
	13 – 40
98580–04010	7 – 35
	7 – 35
	8 – 35
	8 – 35
	18 – 22
	19 – 27
	20 – 27
98580–05008	12 – 50
98580–05010	5 – 32
	6 – 32
	7 – 37
	8 – 37
	13 – 55
98580–05012	13 – 56
	13 – 86
98580–05014	18 – 7
	19 – 8
	20 – 8
98580–05020	5 – 43
	6 – 43
98580–05025	19 – 47
	20 – 47
98580–05040	13 – 57
98580–05060	3 – 5
	3 – 8
	18 – 49

PART NO. N° PIECES	REF. NO.
98580–05060	19 – 57
	20 – 57
98780–04010	13 – 45
98780–05010	20 – 79
98780–05014	18 – 42
	19 – 50
	20 – 50
98780–05018	9 – 31
	10 – 29
	11 – 29
98980–05010	25 – 9
	26 – 9
98980–06020	25 – 14
	26 – 14