YAMAHA

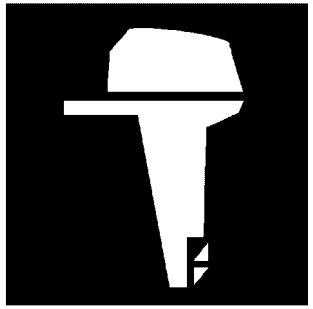

PARTS CATALOGUE

RIGGING-REMOCON

YAMAHA
GENUINE
Parts & Accessories

1S601-10REA

( )

RIGGING-REMOCON
PARTS CATALOGUE
©2018 by Yamaha Motor Co., Ltd.
1st edition, October 2018
All rights reserved.
Any reprinting or unauthorized use
without the written permission of
Yamaha Motor Co., Ltd.
is expressly prohibited.
Printed in Japan.

FOREWORD

This Parts Catalogue is related to the parts for the model(s) on the cover page. When you are ordering replacement parts, please refer to this Parts Catalogue and quote both part numbers and part names correctly.

1. Modifications or additions which have been made after the issue of the Parts Catalogue will be announced in the Parts News.
   It is advisable that you make the necessary corrections to the Parts Catalogue according to the Parts News.

2. Abbreviations
   The following abbreviations are used in this Parts Catalogue.

   "UR" Use specified parts number.

   "UN" Use as many as needed.

   "AP" Alternate Parts

   "LM" Locally Made (Parts need to be ordered locally)

   "F#" Frame No. (Applicable machine No.)

   "O/S" Over Size

3. The number of components for assembly
   - Parts, which are to be supplied in an assembly, are listed with a dot (.) in front of the part name as shown below.
   - The numeral appearing to the right of each component part indicates the quantity of parts for each assembly unit.

PART NO.	DESCRIPTION	Q'TY	REMARKS
2F5–83310–60	FRONT FLASHER LIGHT ASSY	2	
115–83311–60	.BULB (6V–18W)	1	

4. Applicable colours of graphics are represented in the "REMARKS" as shown below.

PART NO.	DESCRIPTION	Q'TY	REMARKS
2N4–24110–00–X5	FUEL TANK COMP.	2	MXR
3J1–24240–10	.GRAPHIC, FUEL TANK	1	FOR MXR

5. Note that the illustrations for reference in finding parts numbers are not to be used for assembling. When assembling, please use the applicable service manual.

6. The asterisk (*) before a reference number indicates modified items after the first edition.

CONTENTS

REMOTE CONTROL BOX 1 1
REMOTE CONTROL BOX 2 2
REMOTE CONTROL BOX 3 3
REMOTE CONTROL ASSY 1 4
REMOTE CONTROL ASSY 2 7
REMOTE CONTROL ASSY 3 10
REMOTE CONTROL ASSY 4 13
REMOTE CONTROL ASSY 5 16
REMOTE CONTROL ASSY 6 19
REMOTE CONTROL ASSY 7 22
REMOTE CONTROL ASSY 8 25
REMOTE CONTROL CABLES 29
LAYOUT CHART 1 (SINGLE) 30
LAYOUT CHART 2 (TWIN) 31
LAYOUT CHART 3 (TRIPLE) 32
LAYOUT CHART 4 (QUAD) 33
DBW REMOTE CONTROL 1 (SINGLE) 34
DBW REMOTE CONTROL 2 (TWIN) 38
DBW REMOTE CONTROL 3 (TRIPLE) 42
DBW REMOTE CONTROL 4 (TRIPLE) 46
DBW REMOTE CONTROL 5 (QUAD) 47
DBW REMOTE CONTROL 6 (QUAD) 50
LAYOUT CHART 5 (6X7) 51
DBW REMOTE CONTROL 7 (6X7) 52
SWITCH & PANEL 1 56
SWITCH & PANEL 2 57
SWITCH & PANEL 3 58
SWITCH & PANEL 4 59
SWITCH & PANEL 5 60
SWITCH & PANEL 6 61
SWITCH & PANEL 7 62
SWITCH & PANEL 8 63
SWITCH & PANEL 9 64
SWITCH & PANEL 10 65
SWITCH & PANEL 11 66
SWITCH & PANEL 12 67
SWITCH & PANEL 13 68
SWITCH & PANEL 14 69
SWITCH & PANEL 15 70
SWITCH & PANEL 16 71
SWITCH & PANEL 17 72
SWITCH & PANEL 18 74
SWITCH & PANEL 19 75
WIRE HARNESS 1 76
WIRE HARNESS 2 77
ELECTRICAL DBW REMO-CON 1 79
ELECTRICAL DBW REMO-CON 2 81
REMO CON ATTACHMENT 1 82
REMO CON ATTACHMENT 2 83
REMO CON ATTACHMENT 3 84
REMO CON ATTACHMENT 4 86
REMO CON ATTACHMENT 5 87
REMO CON ATTACHMENT 6 88
REMO CON ATTACHMENT 7 89
REMO CON ATTACHMENT 8 91
STEERING HOOK 1 92
STEERING HOOK 2 93
STEERING HOOK 3 94
STEERING GUIDE 1 95
STEERING GUIDE 2 96
STEERING GUIDE 3 97
STEERING GUIDE 4 98
STEERING GUIDE 5 99
STEERING GUIDE 6 100
STEERING GUIDE 7 101
STEERING GUIDE 8 102
STEERING GUIDE 9 103
STEERING GUIDE 10 104
STEERING GUIDE 11 105
STEERING GUIDE 12 106

INDEX

NUMERICAL INDEX 107

REMOTE CONTROL BOX SPECIFICATION LIST (703 TYPE)

TYPE : 703	MECHANICAL SPECIFICATION									
PART NO.	LIST UP SEC.	THROTTLE MOTION		HANDLE POSITION		NEUTRAL LOCK	TIGHTENING		LEVER TYPE	
	FIG.NO-REF.NO.	PULL	PUSH	RIGHT	LEFT		BOLT,NUT	ROUND WOOD SCREW	SINGLE	TWIN
703-48210-21	1-1	○	*	○	*	○	○	*	○	*
703-48230-21		○	*	○	*	○	○	*	○	*
703-48250-22		○	*	○	*	○	○	*	○	*
703-48272-22		○	*	○	*	○	○	*	○	*
703-48201-21		*	○	○	*	○	○	*	○	*
703-48201-B1		*	○	○	*	○	○	*	○	*
703-48203-21		*	○	○	*	○	○	*	○	*
703-48205-22		*	○	○	*	○	○	*	○	*
703-48205-B2		*	○	○	*	○	○	*	○	*
703-48207-22		*	○	○	*	○	○	*	○	*
703-48206-20	1-2	*	○	○	*	○	○	*	○	*
703-48260-20		○	*	○	*	○	○	*	○	*

REMOTE CONTROL BOX SPECIFICATION LIST (703 TYPE)

TYPE : 703	ELECTRICAL SPECIFICATION								
PART NO.	ENGINE STOP SW.		MAIN SWITCH		PT/T SW.	WIRE HARNESS COUPLER TYPE	BUZZER		NEUTRAL SW.
	PULL PLATE	PUSH BUTTON	CHOKE MODEL	PRIME START MODEL			ANALOG	DIGITAL	
703-48210-21	688-82575-02	*	703-82510-44	*	*	10P	703-83383-11	*	703-82540-00
703-48230-21	688-82575-02	*	703-82510-34	*	*	7P	703-83383-11	*	703-82540-00
703-48250-22	688-82575-02	*	703-82510-44	*	703-82563-31	10P	703-83383-11	*	703-82540-00
703-48272-22	688-82575-02	*	703-82510-44	*	703-82563-21	10P	703-83383-11	*	703-82540-00
703-48201-21	688-82575-02	*	703-82510-44	*	*	10P	703-83383-11	*	703-82540-00
703-48201-B1	688-82575-02	*	*	703-82510-13	*	10P	703-83383-11	*	703-82540-00
703-48203-21	688-82575-02	*	703-82510-34	*	*	7P	703-83383-11	*	703-82540-00
703-48205-22	688-82575-02	*	703-82510-44	*	703-82563-31	10P	703-83383-11	*	703-82540-00
703-48205-B2	688-82575-02	*	*	703-82510-13	703-82563-31	10P	703-83383-11	*	703-82540-00
703-48207-22	688-82575-02	*	703-82510-44	*	703-82563-21	10P	703-83383-11	*	703-82540-00
703-48206-20	701-82575-53	*	*	*	*	2P	*	*	*
703-48260-20	701-82575-53	*	*	*	*	2P	*	*	*

703 REMOTE CONTROL

Part No.	Throttle		Choke	PTT	Coupler			Mount		Remarks
	Push	Pull			7-pin	10-pin	2-pin	R	L	
703-48210-21		1	1			1		1		
703-48230-21		1	1		1			1		For analog gauge only
703-48250-22		1	1	1		1		1		
703-48272-22		1	1	1		1		1		For additional trim SW
703-48201-21	1		1			1		1		
703-48201-B1	1					1		1		
703-48203-21	1		1		1			1		For analog gauge only
703-48205-22	1		1	1		1		1		
703-48205-B2	1			1		1		1		
703-48207-22	1		1	1		1		1		For additional trim SW
703-48206-20	1						1	1		Successor model of 701 RC
703-48260-20		1					1	1		Successor model of 701 RC
703-48290-01	Twin attachment kit									For twin engine application

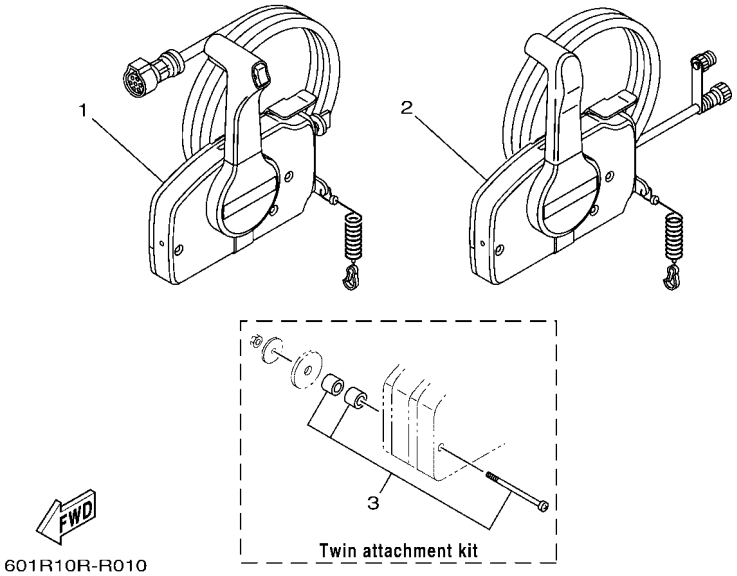

601R10R-R010

FIG. 1 REMOTE CONTROL BOX 1

REF. NO.	PART NO.	DESCRIPTION	601R					REMARKS
1	703–48210–21	REMOTE CONTROL ASSY (10P)	1					UR WITHOUT PT/T SW.
	703–48230–21	REMOTE CONTROL ASSY (7P)	1					UR WITHOUT PT/T SW.
	703–48250–22	REMOTE CONTROL ASSY (10P, PTT)	1					UR WITH PT/T SW.
	703–48272–22	REMOTE CONTROL ASSY (10P, PTT)	1					UR WITH PT/T SW.
	703–48201–21	REMOTE CONTROL ASSY (10P)	1					UR WITHOUT PT/T SW.
	703–48201–B1	REMOTE CONTROL ASSY (10P)	1					UR WITHOUT PT/T SW.
	703–48203–21	REMOTE CONTROL ASSY (7P)	1					UR WITHOUT PT/T SW.
	703–48205–22	REMOTE CONTROL ASSY (10P, PTT)	1					UR WITH PT/T SW.
	703–48205–B2	REMOTE CONTROL ASSY (10P, PTT)	1					UR WITH PT/T SW.
	703–48207–22	REMOTE CONTROL ASSY (10P, PTT)	1					UR WITH PT/T SW.
2	703–48206–20	REMOTE CONTROL ASSY	1					UR WITHOUT PT/T SW.
	703–48260–20	REMOTE CONTROL ASSY	1					UR WITHOUT PT/T SW.
3	703–48290–01	TWIN ATTACHMENT	1					FOR TWIN

REMOTE CONTROL BOX SPECIFICATION LIST (704 TYPE)

TYPE : 704	MECHANICAL SPECIFICATION								
TYPE : 704 (SINGLE)	LIST UP SEC.	HANDLE POSITION		SHIFT MOTION		THROTTLE MOTION		LEVER TYPE	
PART NO.	FIG.NO.-REF.NO.	RIGHT	LEFT	PULL	PUSH	PULL	PUSH	SINGLE	TWIN
704-48205-R0	2-1	*	○	○	*	*	○	○	*
704-48206-R0		○	*	○	*	*	○	○	*
TYPE : 704 (TWIN)	LIST UP SEC.	HANDLE POSITION		SHIFT MOTION		THROTTLE MOTION		LEVER TYPE	
PART NO.	FIG.NO.-REF.NO.	RIGHT	LEFT	PULL	PUSH	PULL	PUSH	SINGLE	TWIN
704-48207-R0	2-2	*	*	○	*	*	○	*	○

REMOTE CONTROL BOX SPECIFICATION LIST (704 TYPE)

TYPE : 704	ELECTRICAL SPECIFICATION					
TYPE : 704 (SINGLE)	PT/T SW.			NEUTRAL SW.	CABLE TERMINAL	
PART NO.	BODY SW.	BODY SW.	GRIP SW.		MM	INCH
704-48205-R0	*	*	704-82563-60	704-82540-40	*	○
704-48206-R0	*	*	704-82563-60	704-82540-40	*	○
TYPE : 704 (TWIN)	PT/T SW.			NEUTRAL SW.	CABLE TERMINAL	
PART NO.	BODY SW.	BODY SW.	GRIP SW.		MM	INCH
704-48207-R0	704-82563-80	704-82563-90	704-82563-70	704-82540-30	*	○

704 REMOTE CONTROL

Part No.	Throttle		PTT	Lever		
	Push	Pull		R	L	Twin
704-48205-R0	1		1		1	
704-48206-R0	1		1	1		
704-48207-R0	1		1			1

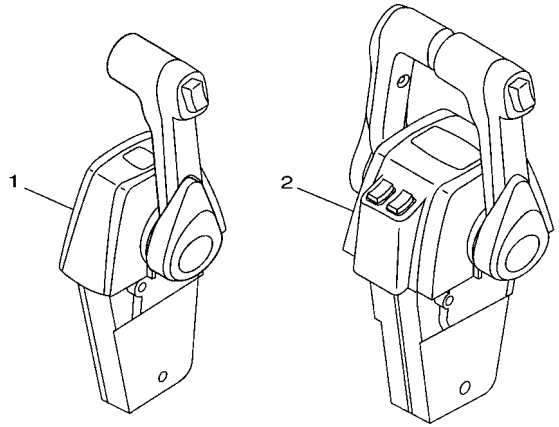

Part No.	Remarks
704-48293-20	Single
704-48293-30	Twin

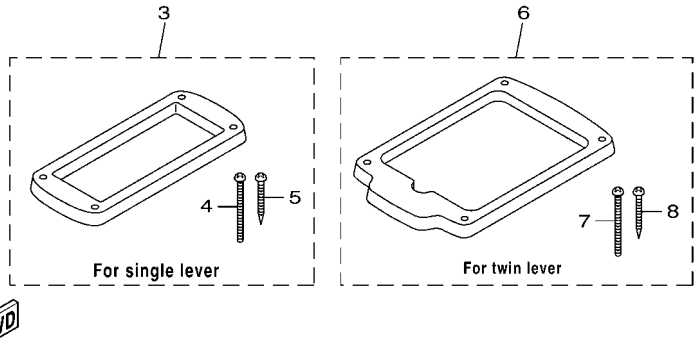

601R10R-R020

FIG. 2 REMOTE CONTROL BOX 2

REF. NO.	PART NO.	DESCRIPTION	601R					REMARKS
1	704–48205–R0	REMOTE CONTROL ASSY (R/H)	1					UR WITH PT/T SW.
	704–48206–R0	REMOTE CONTROL ASSY (L/H)	1					UR WITH PT/T SW.
2	704–48207–R0	REMOTE CONTROL ASSY	1					WITH PT/T SW.
3	704–48293–20	SPACER, REMOTE CONTROL	1					FOR SINGLE
4	98580–05060	.SCREW, PAN HEAD	4					
5	97780–50145	.SCREW, TAPPING	4					
6	704–48293–30	SPACER, REMOTE CONTROL	1					FOR TWIN
7	98580–05060	.SCREW, PAN HEAD	4					
8	97780–50145	.SCREW, TAPPING	4					

REMOTE CONTROL BOX SPECIFICATION LIST (6X3/6X5 TYPE)

SIDE MOUNT	MECHANICAL SPECIFICATION									
TYPE : 6X3 (SINGLE)	LIST UP SEC.	HANDLE POSITION		SHIFT MOTION		THROTTLE MOTION		LEVER TYPE		
PART NO.	FIG.NO.-REF.NO.	RIGHT	LEFT	PULL	PUSH	PULL	PUSH	SINGLE	TWIN	TRIPLE
6X3-48206-10	3-1	○	*	○	*	*	○	○	*	*
6X3-48206-20	3-2	*	○	○	*	*	○	○	*	*

TOP MOUNT	MECHANICAL SPECIFICATION									
TYPE : 6X5	LIST UP SEC.	HANDLE POSITION		SHIFT MOTION		THROTTLE MOTION		LEVER TYPE		
PART NO.	FIG.NO.-REF.NO.	RIGHT	LEFT	PULL	PUSH	PULL	PUSH	SINGLE	TWIN	TRIPLE
6X5-48207-03	3-3	○	*	*	○	○	*	*	*	○

REMOTE CONTROL BOX SPECIFICATION LIST (6X3/6X5 TYPE)

SIDE MOUNT	ELECTRICAL SPECIFICATION						
TYPE : 6X3 (SINGLE)	PT/T SW.				NEUTRAL SW.	CABLE TERMINAL	
PART NO.	BODY SW.	BODY SW.	BODY SW.	GRIP SW.		MM	INCH
6X3-48206-10	*	*	*	6X3-82563-02	704-82540-00	*	○
6X3-48206-20	*	*	*	6X3-82563-02	704-82540-00	*	○
TOP MOUNT	ELECTRICAL SPECIFICATION						
TYPE : 6X5	PT/T SW.				NEUTRAL SW.	CABLE TERMINAL	
PART NO.	BODY SW.	BODY SW.	BODY SW.	GRIP SW.		MM	INCH
6X5-48207-03	6X5-82563-12	6X5-82563-22	6X5-82563-32	6X5-82563-02	6X5-82540-00	*	○

6X3 REMOTE CONTROL

Part No.	Throttle		PTT	Mount		Remarks
	Push	Pull		R	L	
6X3-48206-10	1		1	1		With emergency shut-off cord (2-pin coupler)
6X3-48206-20	1		1		1	

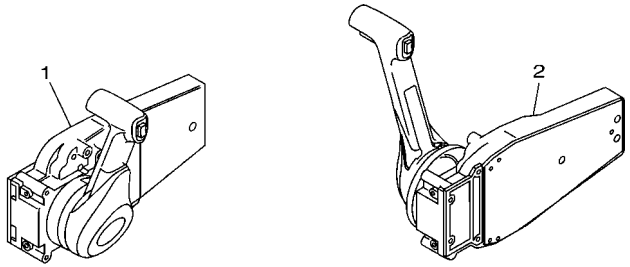

6X5 REMOTE CONTROL

Part No.	Throttle		PTT	Mount		Remarks
	Push	Pull		R	L	
6X5-48207-03	1		1	1		No wood tone

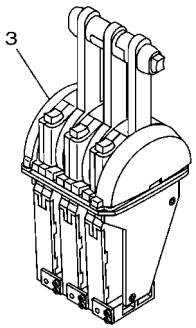

601R10R-S030

FIG. 3 REMOTE CONTROL BOX 3

REF. NO.	PART NO.	DESCRIPTION	601R					REMARKS
1	6X3–48206–10	REMOTE CONTROL ASSY	1					FOR RIGHT MOUNT WITH PT/T SW.
2	6X3–48206–20	REMOTE CONTROL ASSY	1					FOR LEFT MOUNT WITH PT/T SW.
3	6X5–48207–03	REMOTE CONTROL ASSY	1					WITH PT/T SW.

703 REMOTE CONTROL (PULL TO OPEN TYPE)

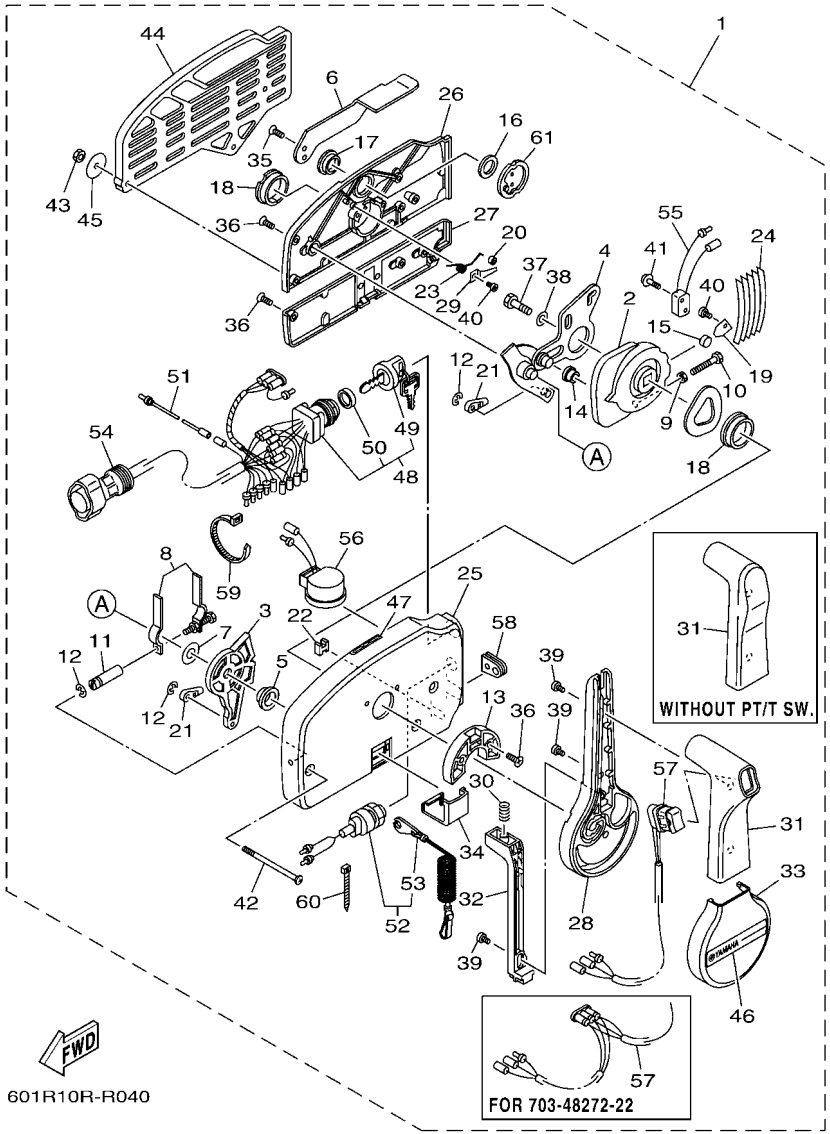

FIG. 4 REMOTE CONTROL ASSY 1

REF. NO.	PART NO.	DESCRIPTION	601R					REMARKS
1	703–48210–21	REMOTE CONTROL ASSY (10P)	1					UR WITHOUT PT/T SW.
	703–48230–21	REMOTE CONTROL ASSY (7P)	1					UR WITHOUT PT/T SW.
	703–48250–22	REMOTE CONTROL ASSY (10P, PTT)	1					UR WITH PT/T SW.
	703–48272–22	REMOTE CONTROL ASSY (10P, PTT)	1					UR WITH PT/T SW.
2	703–48232–00	.GEAR	1					
3	703–48271–00	.ARM, SHIFT	1					
4	703–48261–11	.ARM, THROTTLE	1					
5	703–48235–00	.BUSHING	1					
6	703–48152–10	.KNOB, FREE ACCEL.	1					
7	703–48268–00	.SPACER	1					
8	703–48264–00	.FRICTION, THROTTLE	1					
9	95380–05600	.NUT	1					
10	97380–05025	.BOLT	1					
11	703–48265–10	.SHAFT, FRICTION	1					
12	93430–06024	.CIRCLIP	3					
13	703–48245–00	.PLATE, LOCK	1					
14	703–48252–00	.ROLLER, CAM	1					
15	701–48248–00	.ROLLER, FREE ACCEL.	1					
16	703–48198–00	.WASHER, WAVE	1					
17	703–48243–00	.BUSHING	1					
18	703–48236–00	.BUSHING 1	2					
19	703–48189–00	.RETAINER	1					
20	703–48234–00	.ROLLER, DETENT	1					
21	703–48345–01	.CABLE END, REMOTE CONTROL 2	2					
22	703–48358–00	.ANCHOR, CABLE	1					
23	703–48244–00	.SPRING, FREE ACCEL.	1					
24	703–48238–00	.SPRING, DETENT	5					

703 REMOTE CONTROL (PULL TO OPEN TYPE)

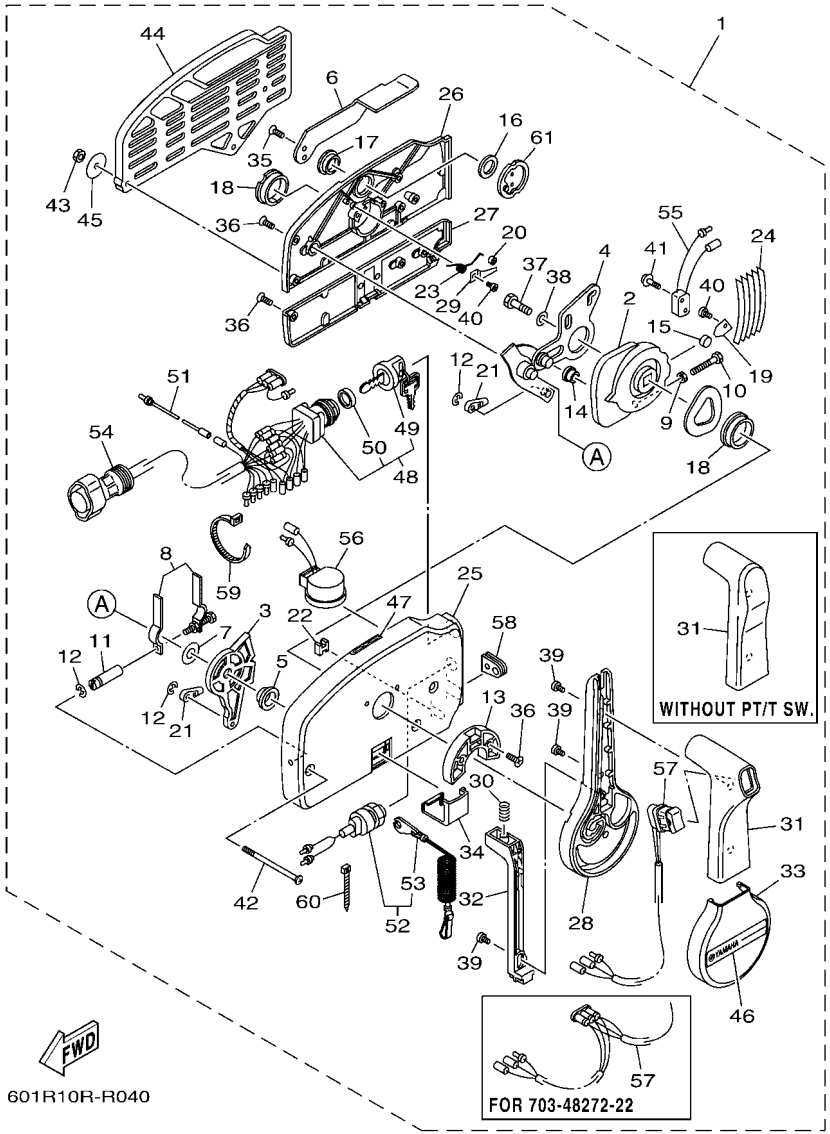

FIG. 4 REMOTE CONTROL ASSY 1

REF. NO.	PART NO.	DESCRIPTION	601R					REMARKS
25	703–48211–10	.HOUSING,1	1					
26	703–48212–10	.BACK PLATE 1	1					
27	703–48213–10	.BACK PLATE 2	1					
28	703–48221–10	.LEVER, CONTROL	1					
29	703–48246–00	.SPACER	1					
30	703–48227–00	.SPRING, NEUTRAL LOCK	1					
31	703–48222–20	.GRIP, CONTROL LEVER	1					WITH PT/T SW.
	703–48222–30	.GRIP, CONTROL LEVER	1					WITHOUT PT/T SW.
32	703–48223–10	.LOCK, NEUTRAL	1					
33	703–48225–10	.COVER	1					
34	703–48219–10	.COVER, LEAD	1					
35	703–48281–00	.SCREW	2					
36	703–44189–20	.SCREW	7					
37	97380–08030	.BOLT	1					
38	92990–08600	.WASHER, PLATE	1					
39	703–48128–10	.SCREW 2	3					
40	98580–04006	.SCREW, PAN HEAD	2					
41	703–48129–00	.SCREW 3	2					
42	703–44189–30	.SCREW	3					
43	95380–06600	.NUT, HEXAGON	3					
44	703–48293–10	.SPACER, REMOTE CONTROL	1					SINGLE
45	701–48287–00	.WASHER	3					
46	703–48215–10	.GRAPHIC	1					
47	6X3–44191–00	.INDICATOR, SHIFT	1					
48	703–82510–44	.MAIN SWITCH ASSY	1					EXCEPT 703-48230-21
	703–82510–34	.MAIN SWITCH ASSY	1					FOR 703-48230-21
49	703–82577–00	..CAP, KEY	1					

703 REMOTE CONTROL (PULL TO OPEN TYPE)

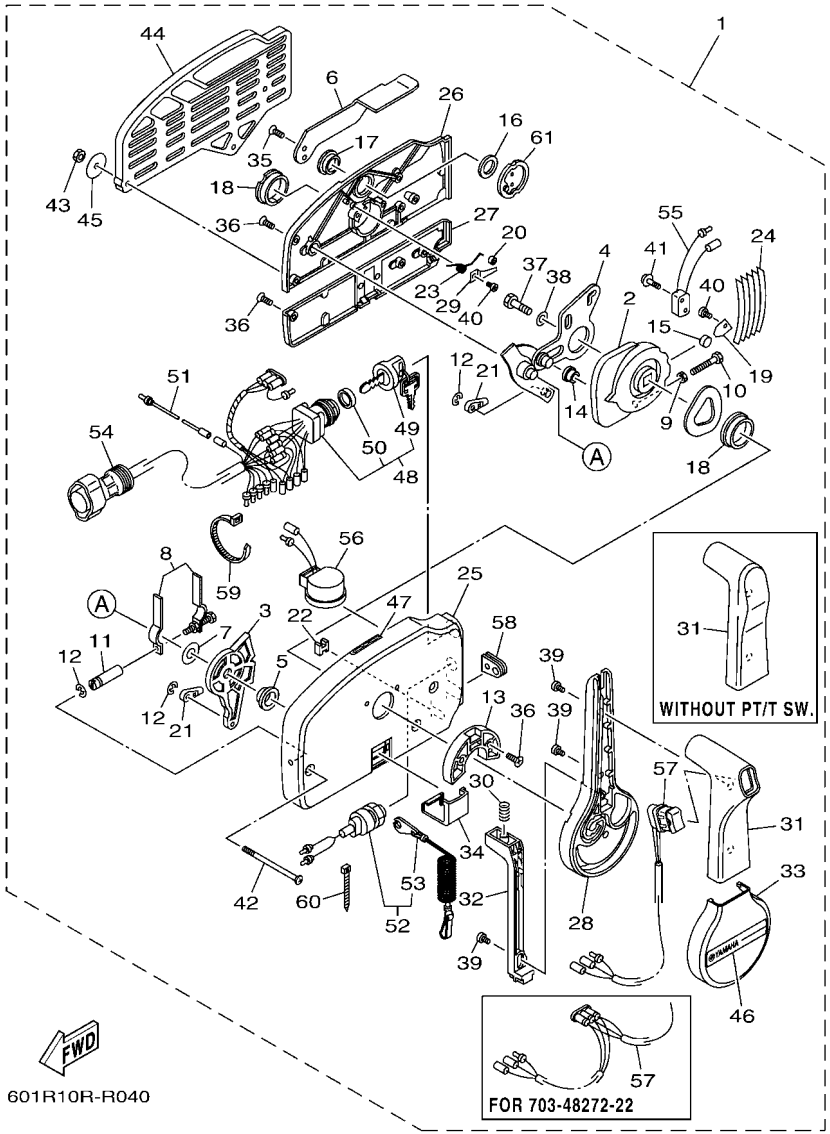

FIG. 4 REMOTE CONTROL ASSY 1

REF. NO.	PART NO.	DESCRIPTION	601R					REMARKS
50	6K1–82532–00	..CAP	1					
51	703–82531–00	.WIRE, LEAD (L70)	1					
52	688–82575–02	.ENGINE STOP SWITCH ASSY	1					
53	682–82556–00	..LANYARD, STOP SWITCH	1					
54	688–8258A–20	.EXTENSION, WIRE HARNESS (4.9M)	1					EXCEPT 703-48230-21 (10P)
	688–82586–21	.EXTENSION, WIRE HARNESS (4.9M)	1					FOR 703-48230-21 (7P)
55	703–82540–00	.NEUTRAL SWITCH ASSY	1					
56	703–83383–11	.BUZZER	1					
57	703–82563–31	.TRIM & TILT SWITCH ASSY	1					FOR 703-48250-22
	703–82563–21	.TRIM & TILT SWITCH ASSY	1					FOR 703-48272-22
58	703–48284–00	.GROMMET	1					EXCEPT 703-48272-22
	703–48284–10	.GROMMET	1					FOR 703-48272-22
59	703–82591–00	.BAND	1					
60	703–82592–00	.BAND	1					
61	703–48153–00	.SHAFT, FREE ACCEL.	1					

FIG. 5 REMOTE CONTROL ASSY 2

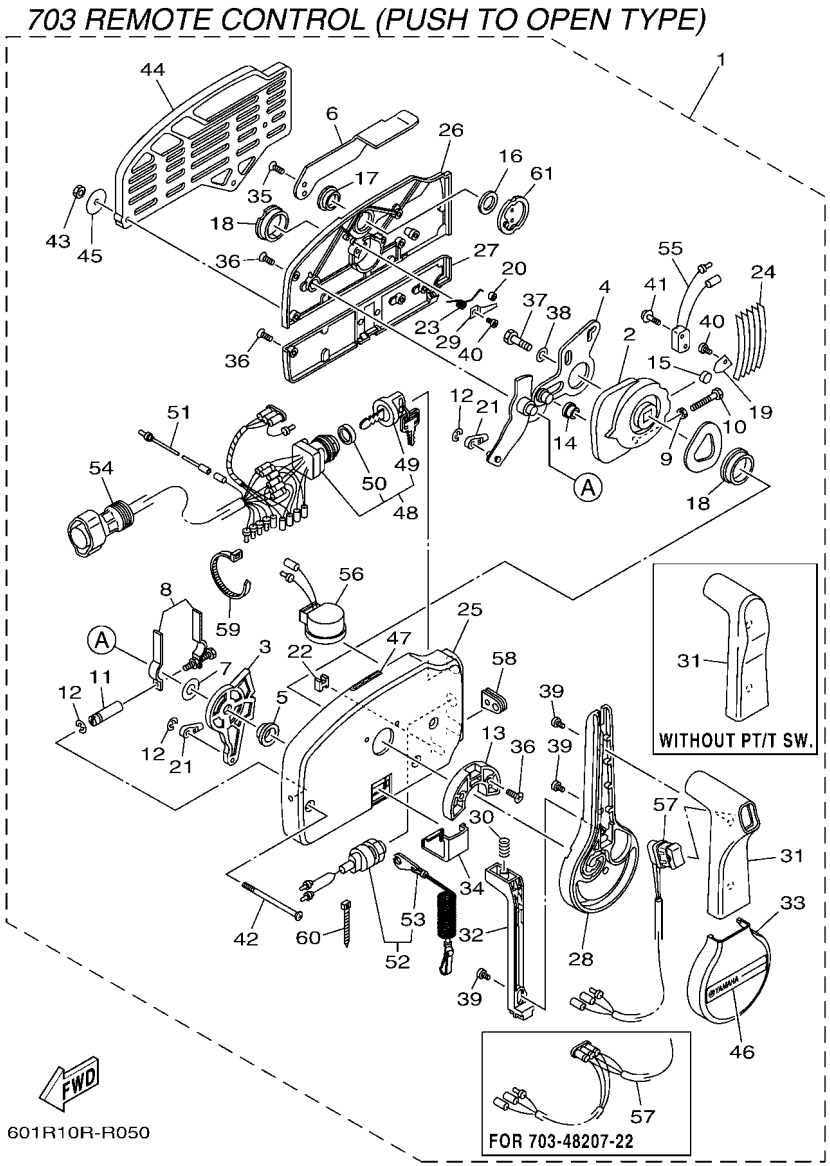

*1: FOR 703-48201-21/ 703-48205-22/ 703-48207-22
*2: FOR 703-48201-B1/ 703-48205-B2

REF. NO.	PART NO.	DESCRIPTION	601R					REMARKS
1	703–48201–21	REMOTE CONTROL ASSY (10P)	1					UR WITHOUT PT/T SW.
	703–48201–B1	REMOTE CONTROL ASSY (10P)	1					UR WITHOUT PT/T SW.
	703–48203–21	REMOTE CONTROL ASSY (7P)	1					UR WITHOUT PT/T SW.
	703–48205–22	REMOTE CONTROL ASSY (10P, PTT)	1					UR WITH PT/T SW.
	703–48205–B2	REMOTE CONTROL ASSY (10P, PTT)	1					UR WITH PT/T SW.
	703–48207–22	REMOTE CONTROL ASSY (10P, PTT)	1					UR WITH PT/T SW.
2	703–48232–00	.GEAR	1					
3	703–48271–00	.ARM, SHIFT	1					
4	703–48261–01	.ARM, THROTTLE	1					
5	703–48235–00	.BUSHING	1					
6	703–48152–10	.KNOB, FREE ACCEL.	1					
7	703–48268–00	.SPACER	1					
8	703–48264–00	.FRICTION, THROTTLE	1					
9	95380–05600	.NUT	1					
10	97380–05025	.BOLT	1					
11	703–48265–10	.SHAFT, FRICTION	1					
12	93430–06024	.CIRCLIP	3					
13	703–48245–00	.PLATE, LOCK	1					
14	703–48252–00	.ROLLER, CAM	1					
15	701–48248–00	.ROLLER, FREE ACCEL.	1					
16	703–48198–00	.WASHER, WAVE	1					
17	703–48243–00	.BUSHING	1					
18	703–48236–00	.BUSHING 1	2					
19	703–48189–00	.RETAINER	1					
20	703–48234–00	.ROLLER, DETENT	1					
21	703–48345–01	.CABLE END, REMOTE CONTROL 2	2					
22	703–48358–00	.ANCHOR, CABLE	1					

703 REMOTE CONTROL (PUSH TO OPEN TYPE)

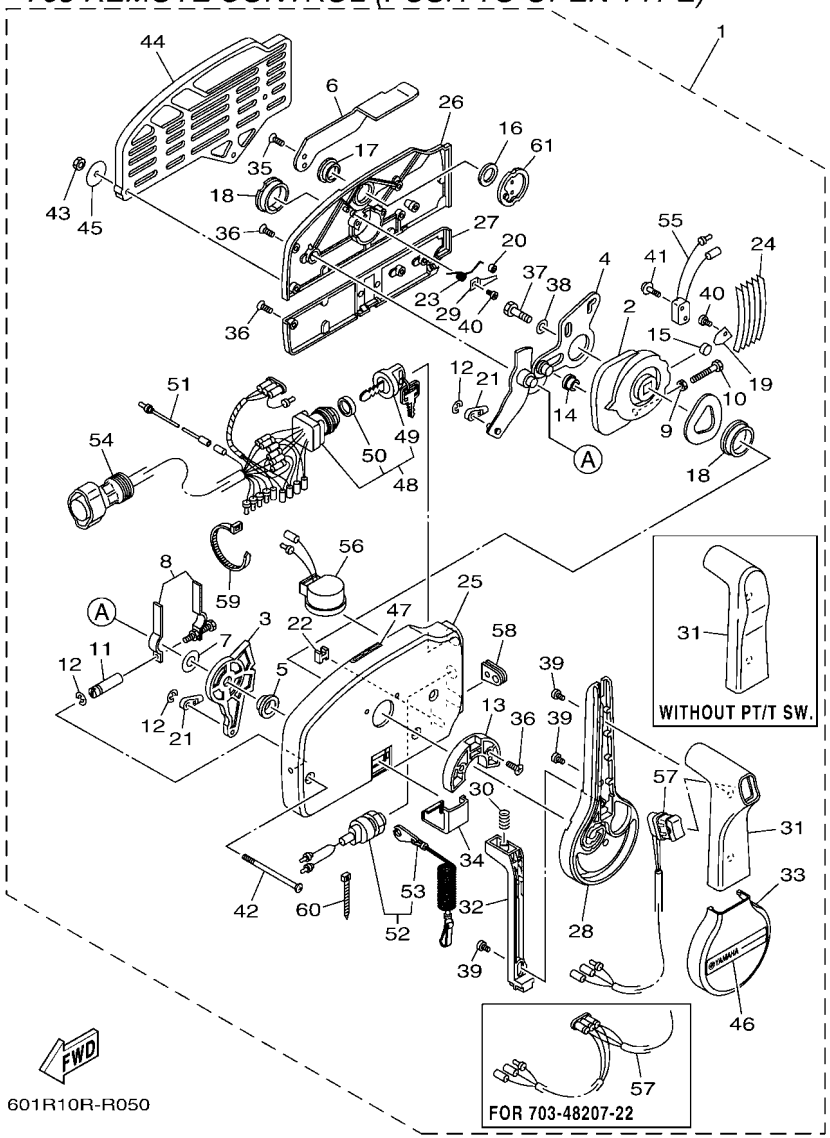

*1: FOR 703-48201-21/ 703-48205-22/ 703-48207-22
*2: FOR 703-48201-B1/ 703-48205-B2

FIG. 5 REMOTE CONTROL ASSY 2

REF. NO.	PART NO.	DESCRIPTION	601R					REMARKS
23	703–48244–00	.SPRING, FREE ACCEL.	1					
24	703–48238–00	.SPRING, DETENT	5					
25	703–48211–10	.HOUSING,1	1					
26	703–48212–10	.BACK PLATE 1	1					
27	703–48213–10	.BACK PLATE 2	1					
28	703–48221–10	.LEVER, CONTROL	1					
29	703–48246–00	.SPACER	1					
30	703–48227–00	.SPRING, NEUTRAL LOCK	1					
31	703–48222–20	.GRIP, CONTROL LEVER	1					WITH PT/T SW.
	703–48222–30	.GRIP, CONTROL LEVER	1					WITHOUT PT/T SW.
32	703–48223–10	.LOCK, NEUTRAL	1					
33	703–48225–10	.COVER	1					
34	703–48219–10	.COVER, LEAD	1					
35	703–48281–00	.SCREW	2					
36	703–44189–20	.SCREW	7					
37	97380–08030	.BOLT	1					
38	92990–08600	.WASHER, PLATE	1					
39	703–48128–10	.SCREW 2	3					
40	98580–04006	.SCREW, PAN HEAD	2					
41	703–48129–00	.SCREW 3	2					
42	703–44189–30	.SCREW	3					
43	95380–06600	.NUT, HEXAGON	3					
44	703–48293–10	.SPACER, REMOTE CONTROL	1					SINGLE
45	701–48287–00	.WASHER	3					
46	703–48215–10	.GRAPHIC	1					
47	6X3–44191–00	.INDICATOR, SHIFT	1					
48	703–82510–44	.MAIN SWITCH ASSY	1					*1

703 REMOTE CONTROL (PUSH TO OPEN TYPE)

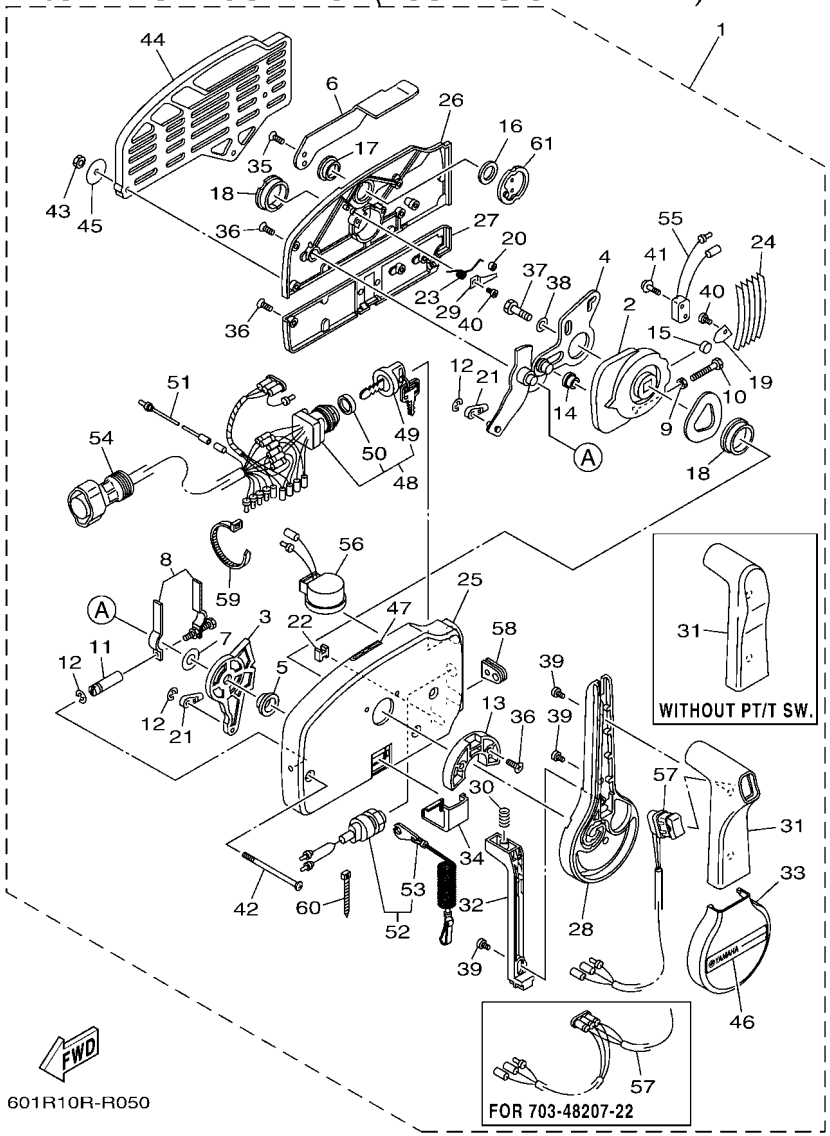

*1: FOR 703-48201-21/ 703-48205-22/ 703-48207-22
*2: FOR 703-48201-B1/ 703-48205-B2

FIG. 5 REMOTE CONTROL ASSY 2

REF. NO.	PART NO.	DESCRIPTION	601R					REMARKS
48	703–82510–13	.MAIN SWITCH ASSY	1					*2
	703–82510–34	.MAIN SWITCH ASSY	1					FOR 703-48203-21
49	703–82577–00	..CAP, KEY	1					FOR 703-82510-44/34
	676–82577–01	..CAP, KEY	1					FOR 703-82510-13
50	6K1–82532–00	..CAP	1					FOR 703-82510-44/34
	703–82532–00	..CAP	1					FOR 70382510-13
51	703–82531–00	.WIRE, LEAD (L70)	1					
52	688–82575–02	.ENGINE STOP SWITCH ASSY	1					
53	682–82556–00	..LANYARD, STOP SWITCH	1					
54	688–8258A–20	.EXTENSION, WIRE HARNESS (4.9M)	1					EXCEPT 703-48203-21 (10P)
	688–82586–21	.EXTENSION, WIRE HARNESS (4.9M)	1					FOR 703-48203-21 (7P)
55	703–82540–00	.NEUTRAL SWITCH ASSY	1					
56	703–83383–11	.BUZZER	1					
57	703–82563–31	.TRIM & TILT SWITCH ASSY	1					FOR 703-48205-22/B2
	703–82563–21	.TRIM & TILT SWITCH ASSY	1					FOR 703-48207-22
58	703–48284–00	.GROMMET	1					EXCEPT 703-48207-22
	703–48284–10	.GROMMET	1					FOR 703-48207-22
59	703–82591–00	.BAND	1					
60	703–82592–00	.BAND	1					
61	703–48153–00	.SHAFT, FREE ACCEL.	1					

703 REMOTE CONTROL
Successor model of 701 REMOTE CONTROL

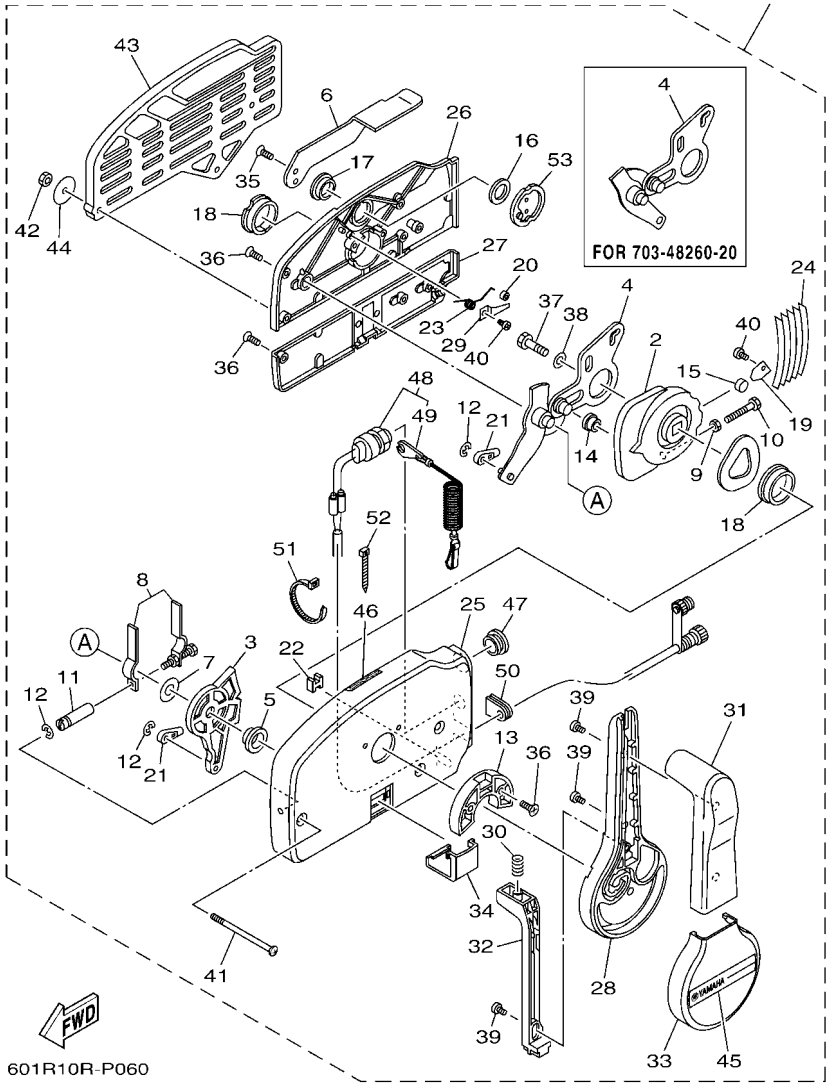

FIG. 6 REMOTE CONTROL ASSY 3

REF. NO.	PART NO.	DESCRIPTION	601R					REMARKS
1	703–48206–20	REMOTE CONTROL ASSY	1					UR WITHOUT PT/T SW.
	703–48260–20	REMOTE CONTROL ASSY	1					UR WITHOUT PT/T SW.
2	703–48232–00	.GEAR	1					
3	703–48271–00	.ARM, SHIFT	1					
4	703–48261–01	.ARM, THROTTLE	1					FOR 703-48206-20
	703–48261–11	.ARM, THROTTLE	1					FOR 703-48260-20
5	703–48235–00	.BUSHING	1					
6	703–48152–10	.KNOB, FREE ACCEL.	1					
7	703–48268–00	.SPACER	1					
8	703–48264–00	.FRICTION, THROTTLE	1					
9	95380–05600	.NUT	1					
10	97380–05025	.BOLT	1					
11	703–48265–00	.SHAFT, FRICTION	1					
12	93430–06024	.CIRCLIP	3					
13	703–48245–00	.PLATE, LOCK	1					
14	703–48252–00	.ROLLER, CAM	1					
15	701–48248–00	.ROLLER, FREE ACCEL.	1					
16	703–48198–00	.WASHER, WAVE	1					
17	703–48243–00	.BUSHING	1					
18	703–48236–00	.BUSHING 1	2					
19	703–48189–00	.RETAINER	1					
20	703–48234–00	.ROLLER, DETENT	1					
21	703–48345–01	.CABLE END, REMOTE CONTROL 2	2					
22	703–48358–00	.ANCHOR, CABLE	1					
23	703–48244–00	.SPRING, FREE ACCEL.	1					
24	703–48238–00	.SPRING, DETENT	5					
25	703–48211–10	.HOUSING,1	1					

703 REMOTE CONTROL
Successor model of 701 REMOTE CONTROL

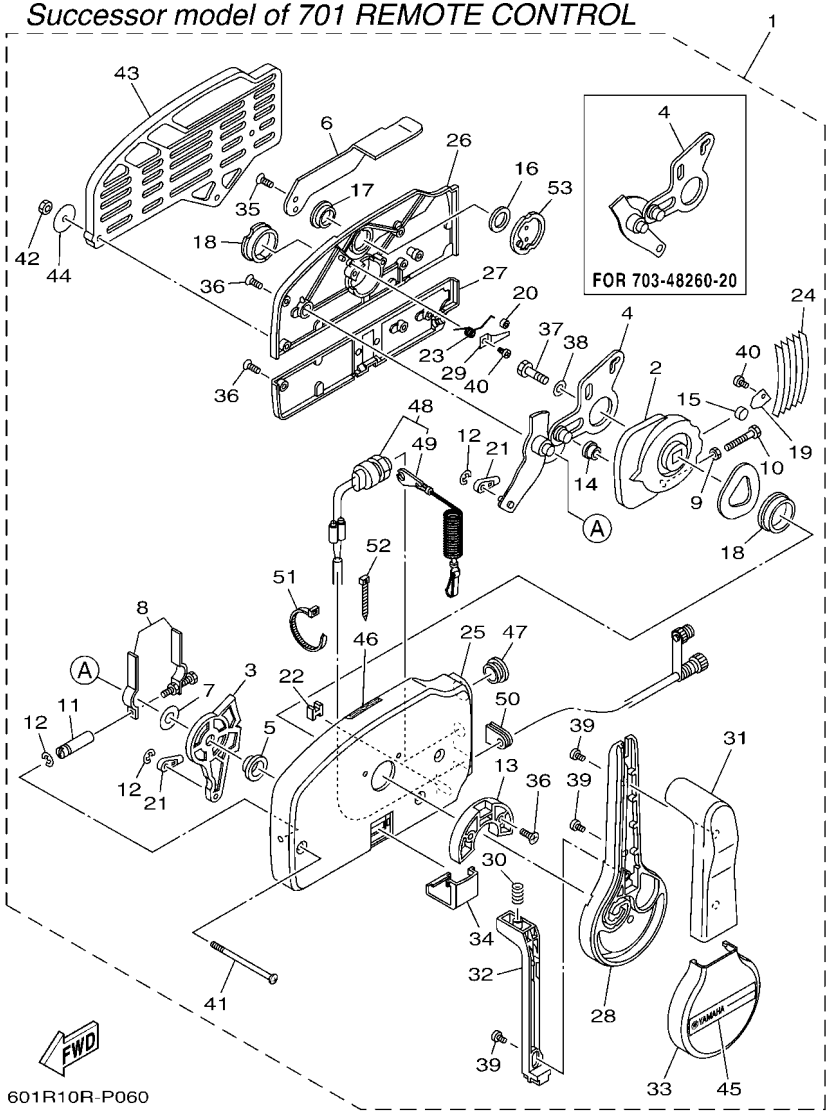

FIG. 6 REMOTE CONTROL ASSY 3

REF. NO.	PART NO.	DESCRIPTION	601R					REMARKS
26	703–48212–10	.BACK PLATE 1	1					
27	703–48213–10	.BACK PLATE 2	1					
28	703–48221–10	.LEVER, CONTROL	1					
29	703–48246–00	.SPACER	1					
30	703–48227–00	.SPRING, NEUTRAL LOCK	1					
31	703–48222–30	.GRIP, CONTROL LEVER	1					WITHOUT PT/T SW.
32	703–48223–10	.LOCK, NEUTRAL	1					
33	703–48225–10	.COVER	1					
34	703–48219–10	.COVER, LEAD	1					
35	703–48281–00	.SCREW	2					
36	703–44189–20	.SCREW	7					
37	97380–08030	.BOLT	1					
38	92990–08600	.WASHER, PLATE	1					
39	703–48128–10	.SCREW 2	3					
40	98580–04006	.SCREW, PAN HEAD	2					
41	703–44189–30	.SCREW	3					
42	95380–06600	.NUT, HEXAGON	3					
43	703–48293–10	.SPACER, REMOTE CONTROL	1					SINGLE
44	701–48287–00	.WASHER	3					
45	703–48215–10	.GRAPHIC	1					
46	6X3–44191–00	.INDICATOR, SHIFT	1					
47	703–48138–00	.CAP, LOCK ARM	1					
48	701–82575–53	.ENGINE STOP SWITCH ASSY	1					
49	682–82556–00	..LANYARD, STOP SWITCH	1					
50	703–48284–20	.GROMMET	1					
51	703–82591–00	.BAND	1					
52	703–82592–00	.BAND	1					

703 REMOTE CONTROL
Successor model of 701 REMOTE CONTROL

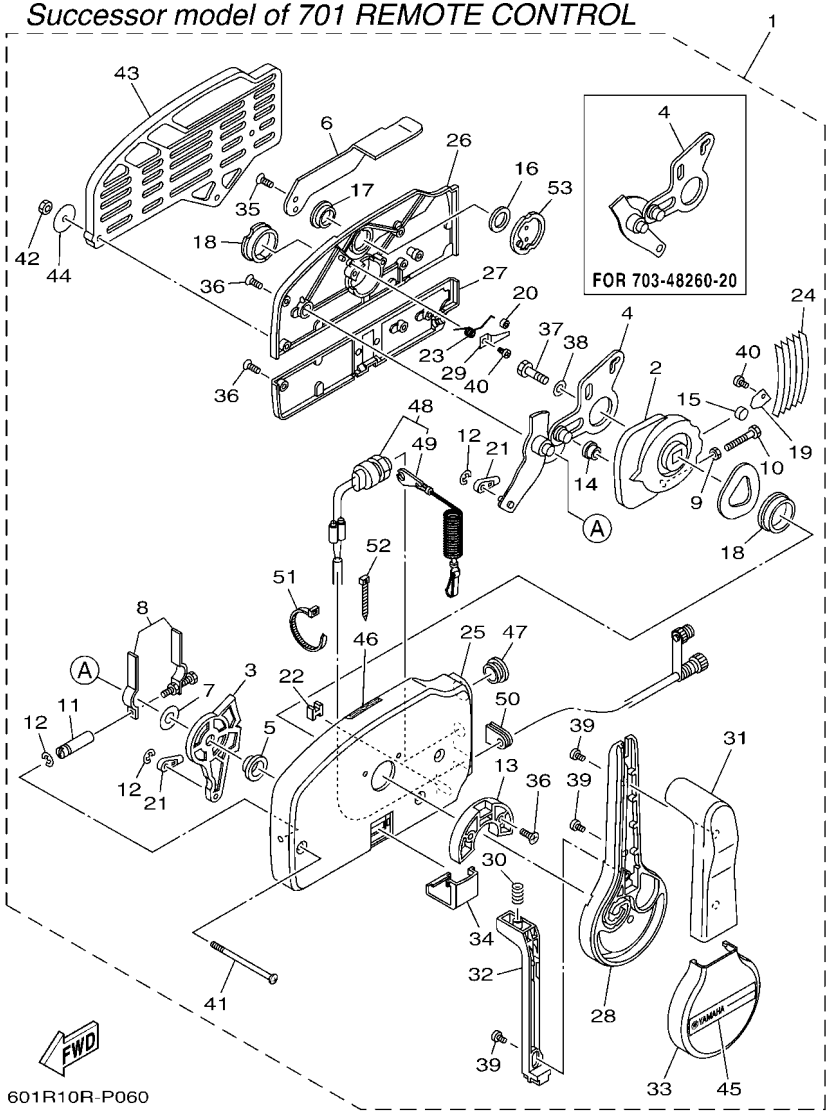

FIG. 6 REMOTE CONTROL ASSY 3

REF. NO.	PART NO.	DESCRIPTION	601R					REMARKS
53	703–48153–00	.SHAFT, FREE ACCEL.	1					

704 REMOTE CONTROL (SINGLE)

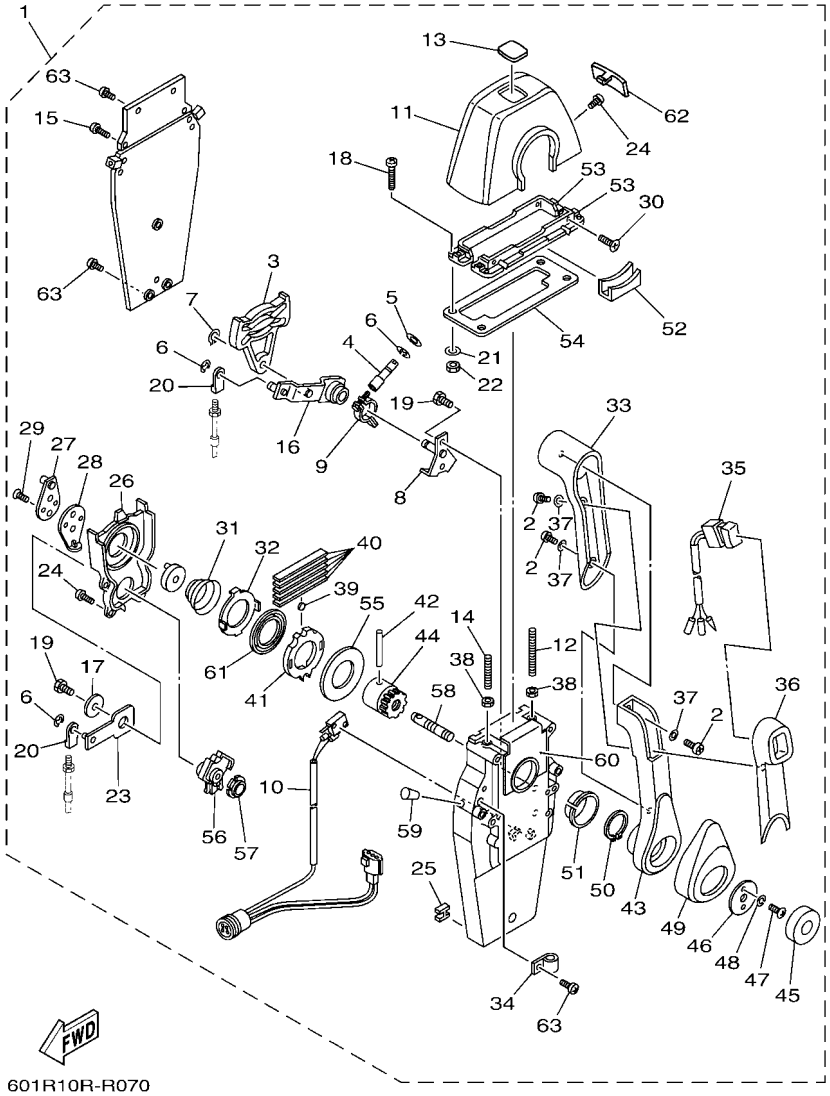

FIG. 7 REMOTE CONTROL ASSY 4

REF. NO.	PART NO.	DESCRIPTION	601R					REMARKS
1	704–48205–R0	REMOTE CONTROL ASSY (R/H)	1					UR SINGLE WITH PT/T SW.
	704–48206–R0	REMOTE CONTROL ASSY (L/H)	1					UR SINGLE WITH PT/T SW.
2	704–48129–11	.SCREW 3	3					
3	EL8–48251–00	.PLATE, CAM	1					
4	704–48265–00	.SHAFT, FRICTION	1					
5	701–48246–00	.SPACER	1					
6	93430–06024	.CIRCLIP	4					
7	EL8–48259–00	.CIRCLIP 1	1					
8	704–48262–00	.SHAFT, THROTTLE	1					
9	704–48264–00	.THROTTLE, FRICTION	1					
10	704–82540–40	.NEUTRAL SWITCH ASSY	1					
11	704–48119–50	.COVER	1					
12	EL8–48281–00	.SCREW	1					
13	704–48215–60	.GRAPHIC	1					
14	704–48281–00	.SCREW	1					
15	97890–05025	.SCREW, PAN HEAD	2					
16	704–48261–00	.ARM, THROTTLE	1					
17	EL8–48191–00	.WASHER 1	1					
18	704–48283–00	.SCREW	4					
19	97380–06018	.BOLT	3					
20	703–48345–01	.CABLE END, REMOTE CONTROL 2	2					
21	704–48287–00	.WASHER	4					
22	95380–05600	.NUT	4					
23	704–48271–00	.ARM, SHIFT	1					
24	EL8–48127–00	.SCREW 1	10					
25	703–48358–00	.ANCHOR, CABLE	1					
26	704–48231–00	.HOUSING, GEAR	1					

704 REMOTE CONTROL (SINGLE)

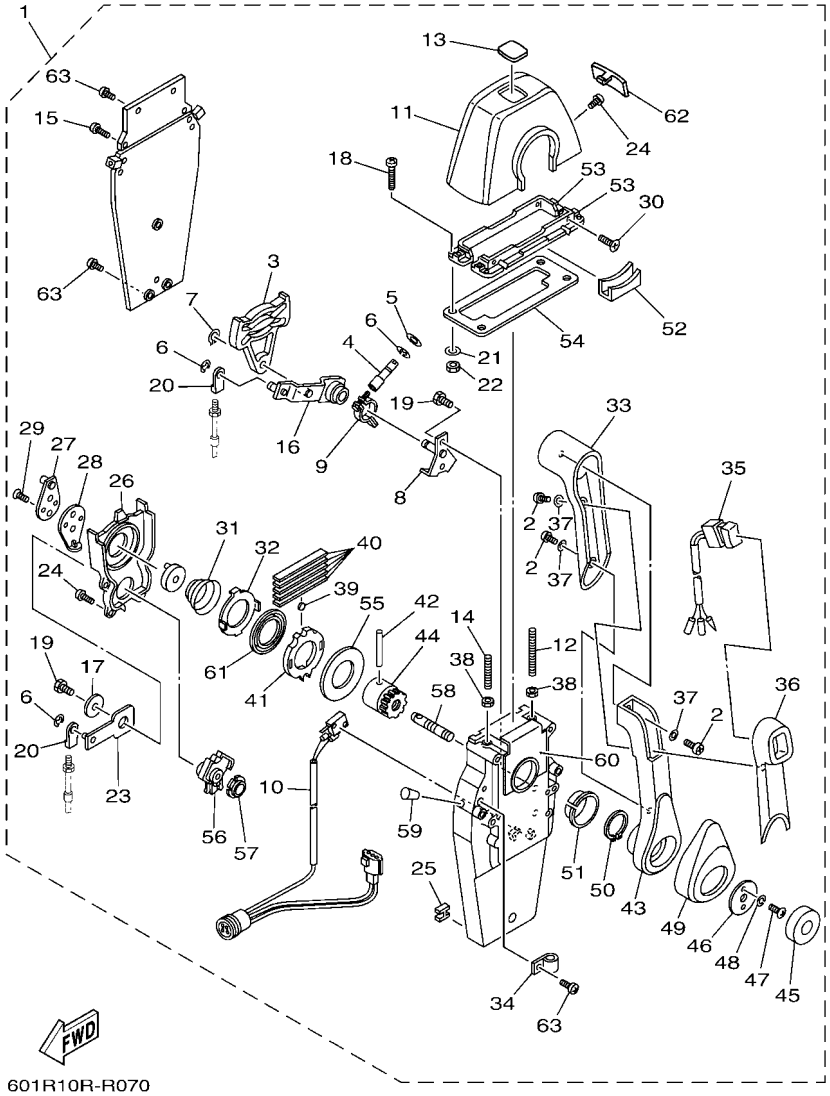

601R10R-R070

FIG. 7 REMOTE CONTROL ASSY 4

REF. NO.	PART NO.	DESCRIPTION	601R					REMARKS
27	EL8–48241–00	.ARM, DRIVE	1					
28	EL8–48254–00	.STOPPER, THROTTLE ADJUSTING	1					
29	92780–06020	.SCREW, FLAT HEAD	2					
30	98780–05018	.SCREW, FLAT HEAD	4					
31	EL8–48244–00	.SPRING, FREE ACCEL.	1					
32	EL8–48245–00	.PLATE, LOCK	1					
33	704–48222–10	.GRIP, CONTROL LEVER	1					
34	704–82594–00	.CLAMP	1					
35	704–82563–60	.TRIM & TILT SWITCH ASSY	1					
36	704–48229–30	.GRIP, CONTROL LEVER	1					
37	92990–05300	.WASHER, INTERNAL TOOTH	3					
38	95380–06600	.NUT, HEXAGON	2					
39	701–48248–00	.ROLLER, FREE ACCEL.	1					
40	704–48238–00	.SPRING, DETENT	5					
41	704–48232–P1	.GEAR	1					
42	EL8–48164–00	.PIN 2	1					
43	704–48221–R0	.LEVER, CONTROL	1					
44	704–48242–10	.SHAFT, DRIVE	1					
45	704–48225–R0	.COVER	1					
46	704–48192–00	.WASHER 2	1					
47	97890–06018	.SCREW, PAN HEAD	2					
48	92990–06300	.WASHER, INTERNAL TOOTH	2					
49	704–48224–R0	.COVER, CONTROL LEVER	1					
50	EL8–48279–00	.CIRCLIP 2	1					
51	704–48234–00	.BUSHING 1	1					
52	704–48219–R0	.COVER, LEAD	1					
53	704–48144–10	.PLATE, STOPPER 2	2					

704 REMOTE CONTROL (SINGLE)

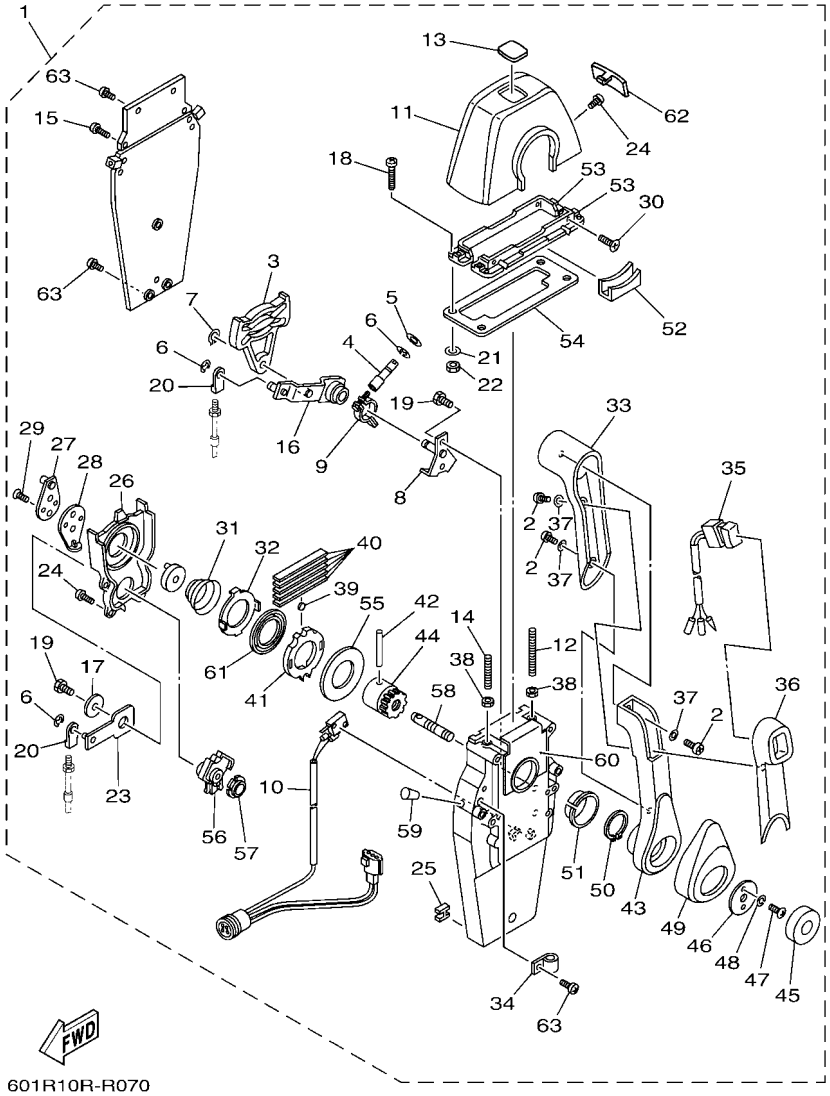

601R10R-R070

FIG. 7 REMOTE CONTROL ASSY 4

REF. NO.	PART NO.	DESCRIPTION	601R					REMARKS
54	704–48176–00	.GROMMET	1					
55	704–48192–P0	.WASHER 2	1					
56	704–48233–00	.GEAR 2	1					
57	704–48235–00	.BUSHING	1					
58	704–48153–00	.SHAFT, FREE ACCEL.	1					
59	704–48166–00	.PLUG	1					
60	704–48284–P0	.GROMMET	1					
61	704–48178–10	.PLATE, SHIFT	1					
62	704–48167–20	.PLUG	1					
63	97890–05016	.SCREW, PAN HEAD	3					

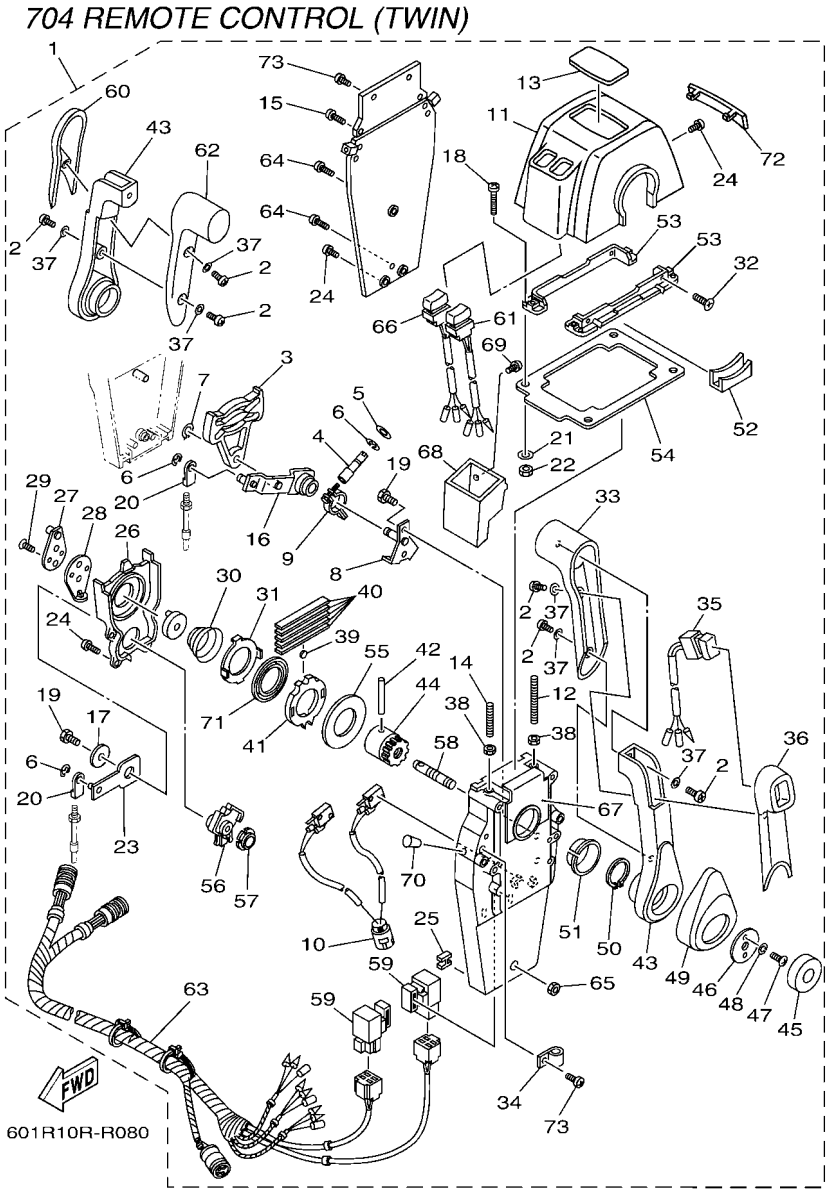

FIG. 8 REMOTE CONTROL ASSY 5

REF. NO.	PART NO.	DESCRIPTION	601R					REMARKS
1	704–48207–R0	REMOTE CONTROL ASSY	1					FOR TWIN WITH PT/T SW.
2	704–48129–11	.SCREW 3	6					
3	EL8–48251–00	.PLATE, CAM	2					
4	704–48265–00	.SHAFT, FRICTION	2					
5	701–48246–00	.SPACER	2					
6	93430–06024	.CIRCLIP	8					
7	EL8–48259–00	.CIRCLIP 1	2					
8	704–48262–00	.SHAFT, THROTTLE	2					
9	704–48264–00	.THROTTLE, FRICTION	2					
10	704–82540–30	.NEUTRAL SWITCH ASSY	1					
11	704–48119–60	.COVER	1					
12	EL8–48281–00	.SCREW	2					
13	704–48215–70	.GRAPHIC	1					
14	704–48281–00	.SCREW	2					
15	97890–05025	.SCREW, PAN HEAD	4					
16	704–48261–00	.ARM, THROTTLE	2					
17	EL8–48191–00	.WASHER 1	2					
18	704–48283–00	.SCREW	4					
19	97380–06018	.BOLT	6					
20	703–48345–01	.CABLE END, REMOTE CONTROL 2	4					
21	704–48287–00	.WASHER	4					
22	95380–05600	.NUT	4					
23	704–48271–00	.ARM, SHIFT	2					
24	EL8–48127–00	.SCREW 1	18					
25	703–48358–00	.ANCHOR, CABLE	2					
26	704–48231–00	.HOUSING, GEAR	2					
27	EL8–48241–00	.ARM, DRIVE	2					

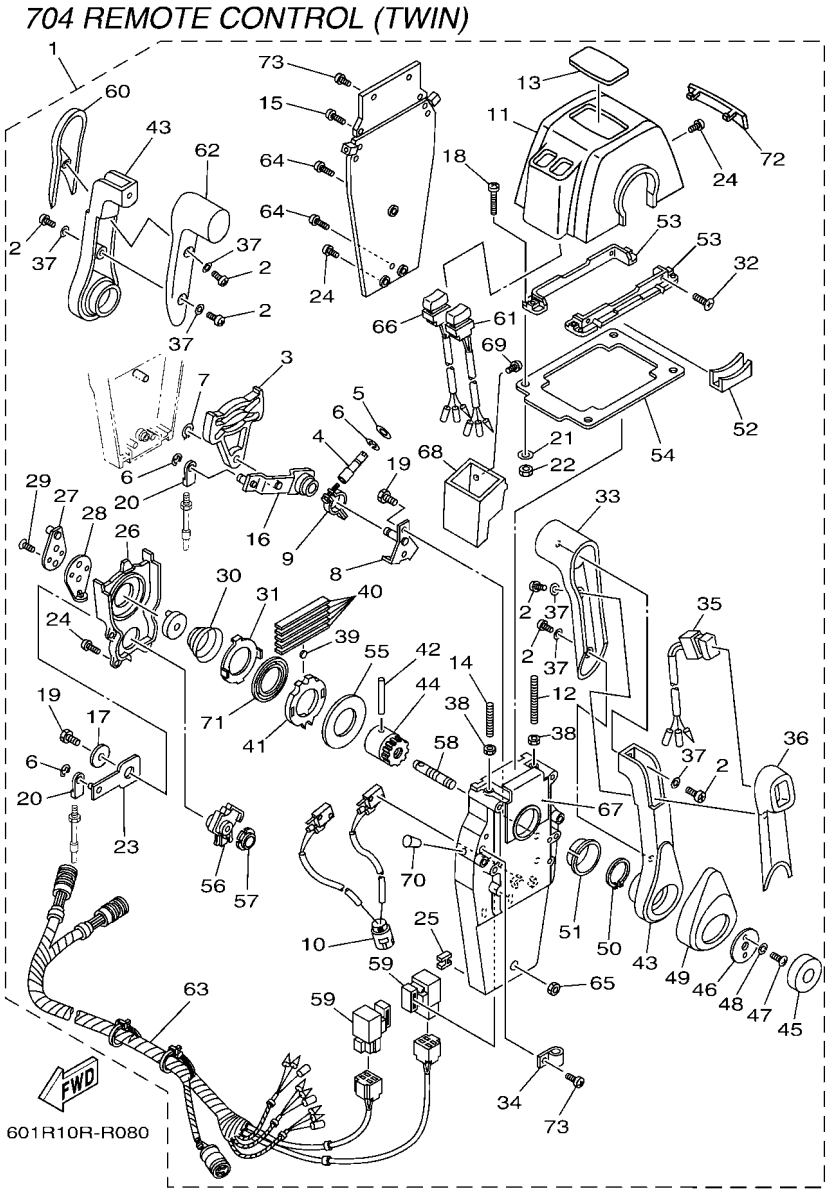

FIG. 8 REMOTE CONTROL ASSY 5

REF. NO.	PART NO.	DESCRIPTION	601R					REMARKS
28	EL8–48254–00	.STOPPER, THROTTLE ADJUSTING	2					
29	92780–06020	.SCREW, FLAT HEAD	4					
30	EL8–48244–00	.SPRING, FREE ACCEL.	2					
31	EL8–48245–00	.PLATE, LOCK	2					
32	98780–05018	.SCREW, FLAT HEAD	4					
33	704–48222–30	.GRIP, CONTROL LEVER	2					
34	704–82594–00	.CLAMP	1					
35	704–82563–70	.TRIM & TILT SWITCH ASSY	1					
36	704–48229–30	.GRIP, CONTROL LEVER	1					
37	92990–05300	.WASHER, INTERNAL TOOTH	6					
38	95380–06600	.NUT, HEXAGON	4					
39	701–48248–00	.ROLLER, FREE ACCEL.	2					
40	704–48238–00	.SPRING, DETENT	10					
41	704–48232–P1	.GEAR	2					
42	EL8–48164–00	.PIN 2	2					
43	704–48221–R0	.LEVER, CONTROL	2					
44	704–48242–10	.SHAFT, DRIVE	2					
45	704–48225–R0	.COVER	2					
46	704–48192–00	.WASHER 2	2					
47	97890–06018	.SCREW, PAN HEAD	4					
48	92990–06300	.WASHER, INTERNAL TOOTH	4					
49	704–48224–R0	.COVER, CONTROL LEVER	2					
50	EL8–48279–00	.CIRCLIP 2	2					
51	704–48234–00	.BUSHING 1	2					
52	704–48219–R0	.COVER, LEAD	2					
53	704–48144–20	.PLATE, STOPPER 2	2					
54	704–48176–10	.GROMMET	1					

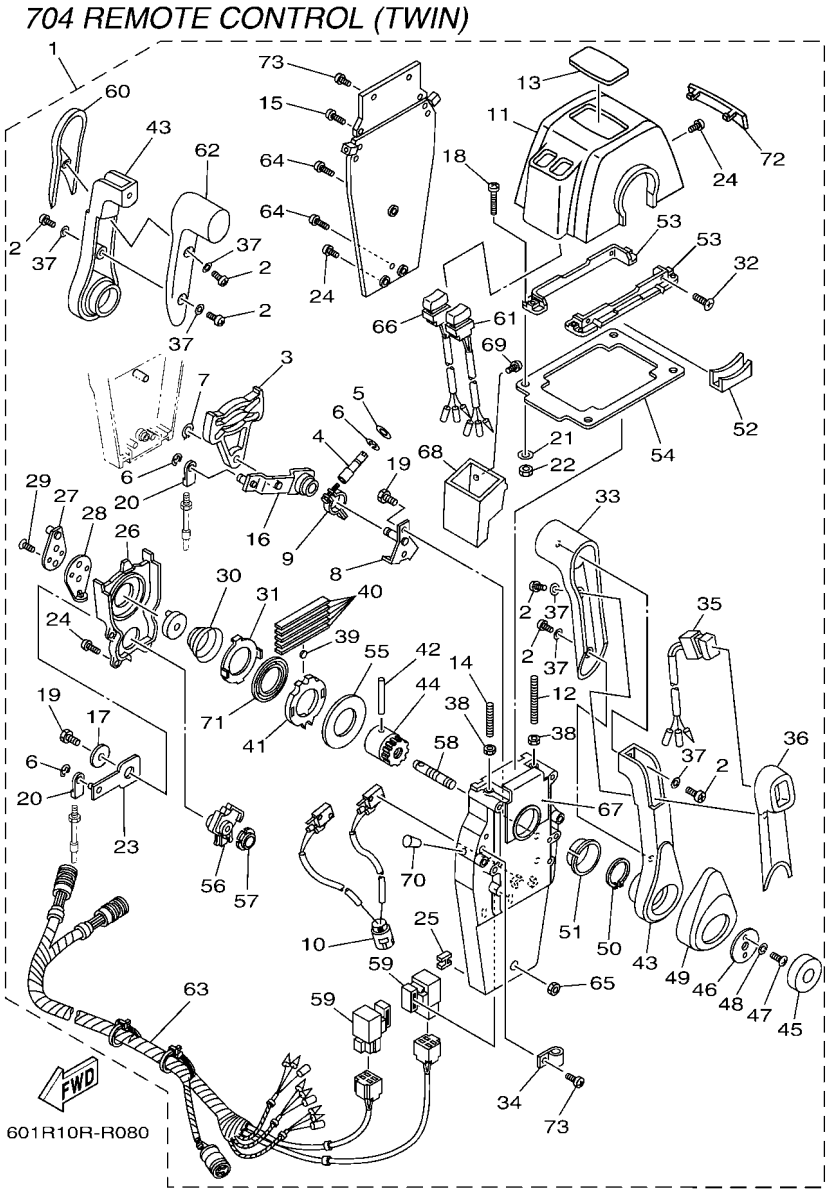

FIG. 8 REMOTE CONTROL ASSY 5

REF. NO.	PART NO.	DESCRIPTION	601R					REMARKS
55	704–48192–P0	.WASHER 2	2					
56	704–48233–00	.GEAR 2	2					
57	704–48235–00	.BUSHING	2					
58	704–48153–00	.SHAFT, FREE ACCEL.	2					
59	704–81950–10	.RELAY ASSY	2					
60	704–48229–20	.GRIP, CONTROL LEVER	1					
61	704–82563–80	.TRIM & TILT SWITCH ASSY	1					
62	704–48222–20	.GRIP, CONTROL LEVER	1					
63	704–82590–10	.WIRE HARNESS ASSY	1					
64	704–48128–00	.SCREW 2	3					
65	704–48156–00	.NUT 1	1					
66	704–82563–90	.TRIM & TILT SWITCH ASSY	1					
67	704–48284–P0	.GROMMET	2					
68	704–48285–20	.GROMMET 2	1					
69	704–48129–60	.SCREW 3	2					
70	704–48166–00	.PLUG	2					
71	704–48178–00	.PLATE, SHIFT	2					
72	704–48167–30	.PLUG	1					
73	97890–05016	.SCREW, PAN HEAD	5					

6X3 REMOTE CONTROL (RIGHT MOUNT)

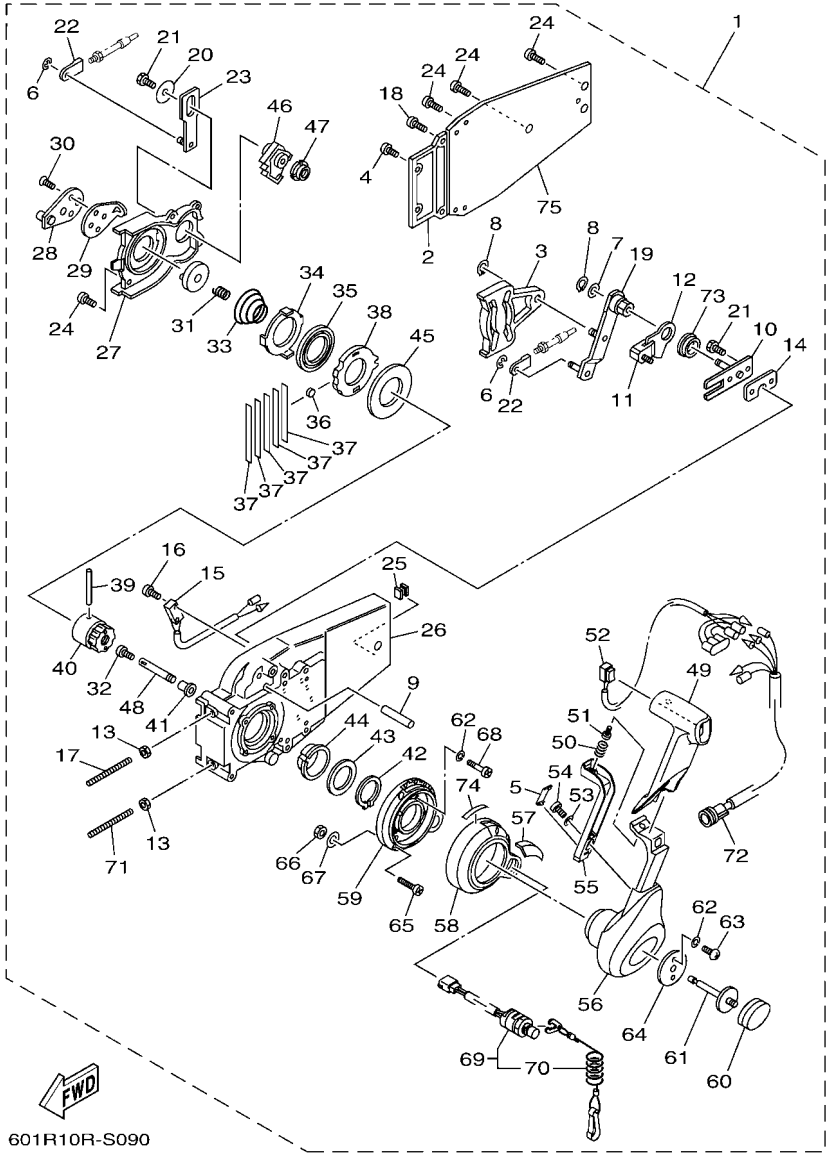

FIG. 9 REMOTE CONTROL ASSY 6

REF. NO.	PART NO.	DESCRIPTION	601R					REMARKS
1	6X3–48206–10	REMOTE CONTROL ASSY	1					FOR RIGHT MOUNT WITH PT/T SW.
2	EL8–48212–00	.BACK PLATE 1	1					
3	EL8–48251–00	.PLATE, CAM	1					
4	97890–05016	.SCREW, PAN HEAD	2					
5	6X0–48138–00	.CAP, LOCK ARM	1					
6	93430–06024	.CIRCLIP	3					
7	92990–10600	.WASHER, PLATE	1					
8	EL8–48259–00	.CIRCLIP 1	2					
9	6X0–48265–00	.SHAFT, FRICTION	1					
10	6X0–48262–00	.SHAFT, THROTTLE	1					
11	6X0–48264–00	.THROTTLE, FRICTION	1					
12	6X0–48187–00	.PLATE, ADJUST	1					
13	95380–06600	.NUT, HEXAGON	2					
14	704–48266–00	.SPACER	1					
15	704–82540–00	.NEUTRAL SWITCH ASSY	1					
16	703–48129–00	.SCREW 3	2					
17	EL8–48281–00	.SCREW	1					
18	97890–05025	.SCREW, PAN HEAD	2					
19	6X0–48261–00	.ARM, THROTTLE	1					
20	EL8–48191–00	.WASHER 1	1					
21	97380–06018	.BOLT	3					
22	703–48345–01	.CABLE END, REMOTE CONTROL 2	2					
23	EL8–48271–00	.ARM, SHIFT	1					
24	EL8–48127–00	.SCREW 1	11					
25	703–48358–00	.ANCHOR, CABLE	1					
26	6X0–48211–00	.HOUSING,1	1					
27	EL8–48231–00	.HOUSING, GEAR	1					

6X3 REMOTE CONTROL (RIGHT MOUNT)

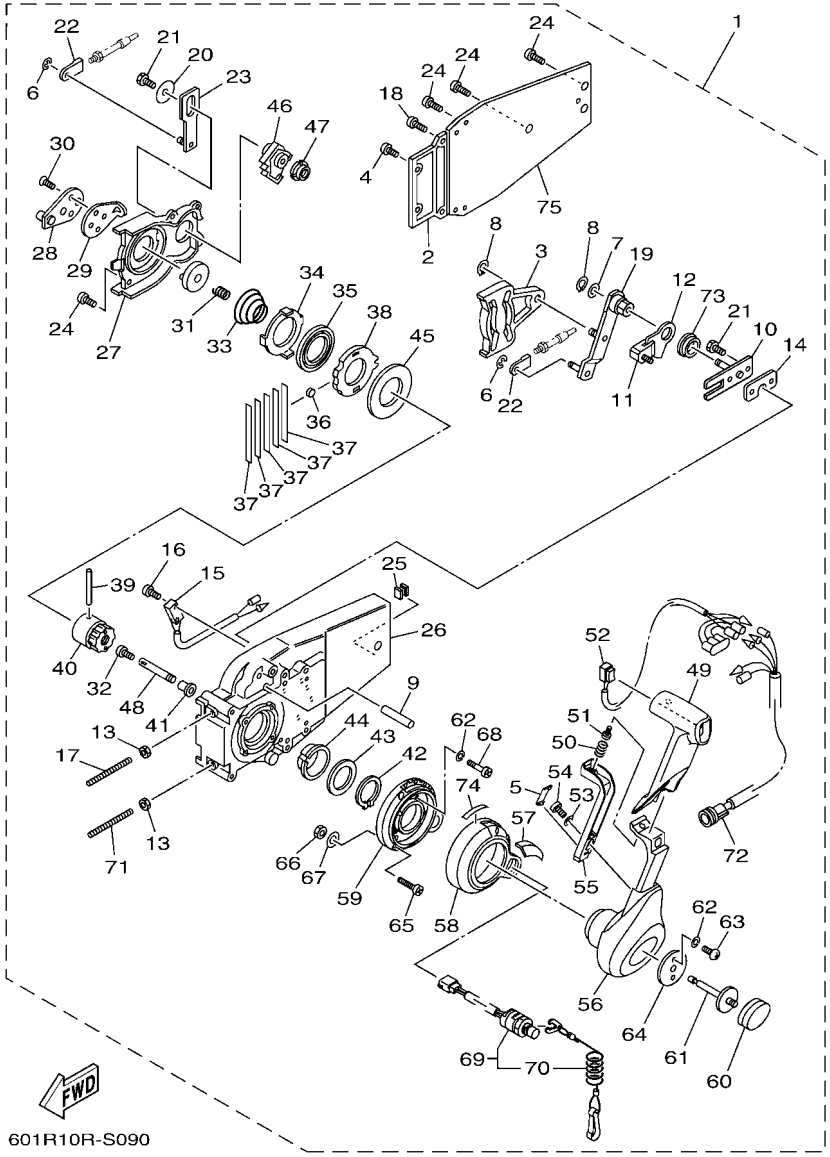

FIG. 9 REMOTE CONTROL ASSY 6

REF. NO.	PART NO.	DESCRIPTION	601R					REMARKS
28	EL8–48241–00	.ARM, DRIVE	1					
29	EL8–48254–00	.STOPPER, THROTTLE ADJUSTING	1					
30	92780–06020	.SCREW, FLAT HEAD	2					
31	EL8–48158–00	.SPRING 1	1					
32	98580–04006	.SCREW, PAN HEAD	1					
33	EL8–48244–00	.SPRING, FREE ACCEL.	1					
34	EL8–48245–00	.PLATE, LOCK	1					
35	704–48178–00	.PLATE, SHIFT	1					
36	701–48248–00	.ROLLER, FREE ACCEL.	1					
37	704–48238–00	.SPRING, DETENT	5					
38	6X0–48121–00	.GEAR 1	1					
39	EL8–48164–00	.PIN 2	1					
40	EL8–48242–10	.SHAFT, DRIVE	1					
41	702–48263–00	.BUSHING	1					
42	EL8–48279–00	.CIRCLIP 2	1					
43	704–48193–00	.WASHER 3	1					
44	EL8–48234–00	.BUSHING 1	1					
45	703–48192–00	.WASHER 2	1					
46	EL8–48233–00	.GEAR 2	1					
47	702–48235–00	.BUSHING	1					
48	6X0–48153–00	.SHAFT, FREE ACCEL.	1					
49	6X3–48222–10	.GRIP, CONTROL LEVER	1					
50	703–48227–00	.SPRING, NEUTRAL LOCK	1					
51	98580–05008	.SCREW, PAN HEAD	1					
52	6X3–82563–02	.TRIM & TILT SWITCH ASSY	1					
53	6X0–48288–00	.WASHER, PLAIN	1					
54	6X0–48127–00	.SCREW 1	1					

6X3 REMOTE CONTROL (RIGHT MOUNT)

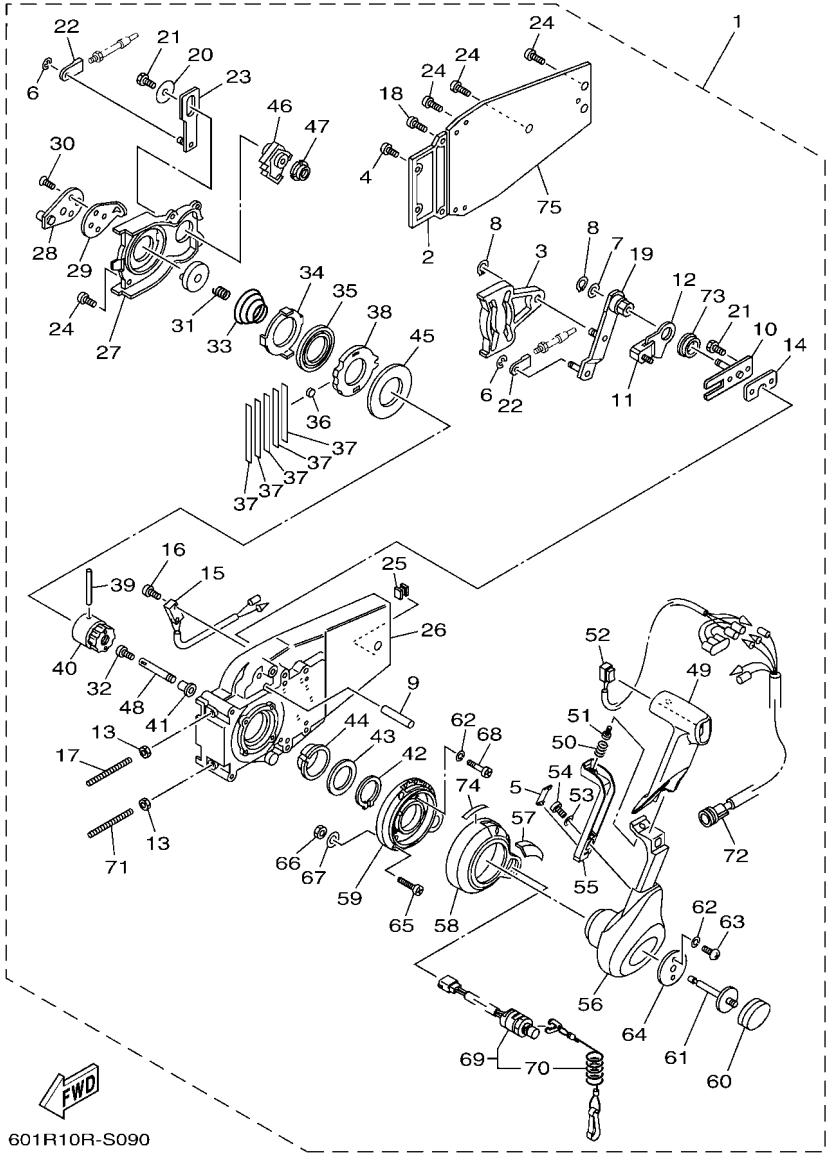

FIG. 9 REMOTE CONTROL ASSY 6

REF. NO.	PART NO.	DESCRIPTION	601R					REMARKS
55	6X0–48223–00	.LOCK, NEUTRAL	1					
56	6X3–48221–10	.LEVER, CONTROL	1					
57	6X3–48225–10	.COVER	1					
58	6X3–48225–00	.COVER	1					
59	6X3–48111–00	.BODY, REMOTE CONTROL 1	1					
60	6X3–48225–30	.COVER	1					
61	6X0–48155–00	.PLUNGER	1					
62	92990–05300	.WASHER, INTERNAL TOOTH	6					
63	6X0–48281–00	.SCREW	2					
64	6X0–48193–00	.WASHER 3	1					
65	97890–06035	.SCREW, PAN HEAD	3					UR
	6X0–48128–00	.SCREW(M6X30)	3					UR
66	6X0–48156–00	.NUT 1	3					
67	701–48287–00	.WASHER	3					
68	6X3–48129–00	.SCREW 3	4					
69	6X3–82575–01	.ENGINE STOP SWITCH ASSY	1					
70	682–82556–00	..LANYARD, STOP SWITCH	1					
71	704–48281–00	.SCREW	1					
72	704–82541–10	.WIRE, LEAD	1					
73	6X0–48116–00	.BUSHING	1					
74	6X3–44191–00	.INDICATOR, SHIFT	1					
75	EL8–48213–00	.BACK PLATE 2	1					

6X3 REMOTE CONTROL (LEFT MOUNT)

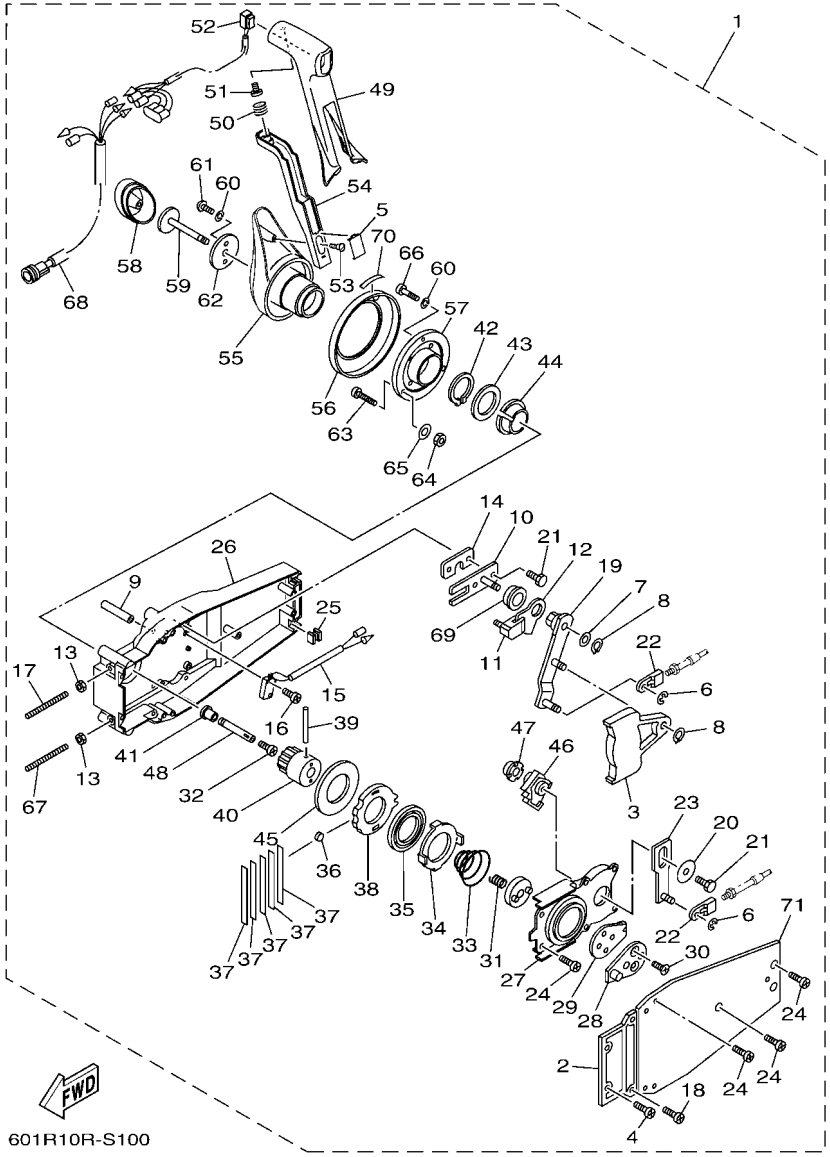

FIG. 10 REMOTE CONTROL ASSY 7

REF. NO.	PART NO.	DESCRIPTION	601R					REMARKS
1	6X3–48206–20	REMOTE CONTROL ASSY	1					FOR LEFT MOUNT WITH PT/T SW.
2	EL8–48212–00	.BACK PLATE 1	1					
3	EL8–48251–00	.PLATE, CAM	1					
4	97890–05016	.SCREW, PAN HEAD	2					
5	6X0–48138–00	.CAP, LOCK ARM	1					
6	93430–06024	.CIRCLIP	3					
7	92990–10600	.WASHER, PLATE	1					
8	EL8–48259–00	.CIRCLIP 1	2					
9	6X0–48265–00	.SHAFT, FRICTION	1					
10	6X0–48262–00	.SHAFT, THROTTLE	1					
11	6X0–48264–00	.THROTTLE, FRICTION	1					
12	6X0–48187–00	.PLATE, ADJUST	1					
13	95380–06600	.NUT, HEXAGON	2					
14	704–48266–00	.SPACER	1					
15	704–82540–00	.NEUTRAL SWITCH ASSY	1					
16	703–48129–00	.SCREW 3	2					
17	EL8–48281–00	.SCREW	1					
18	97890–05025	.SCREW, PAN HEAD	2					
19	6X0–48261–00	.ARM, THROTTLE	1					
20	EL8–48191–00	.WASHER 1	1					
21	97380–06018	.BOLT	3					
22	703–48345–01	.CABLE END, REMOTE CONTROL 2	2					
23	EL8–48271–00	.ARM, SHIFT	1					
24	EL8–48127–00	.SCREW 1	11					
25	703–48358–00	.ANCHOR, CABLE	1					
26	6X0–48211–00	.HOUSING,1	1					
27	EL8–48231–00	.HOUSING, GEAR	1					

6X3 REMOTE CONTROL (LEFT MOUNT)

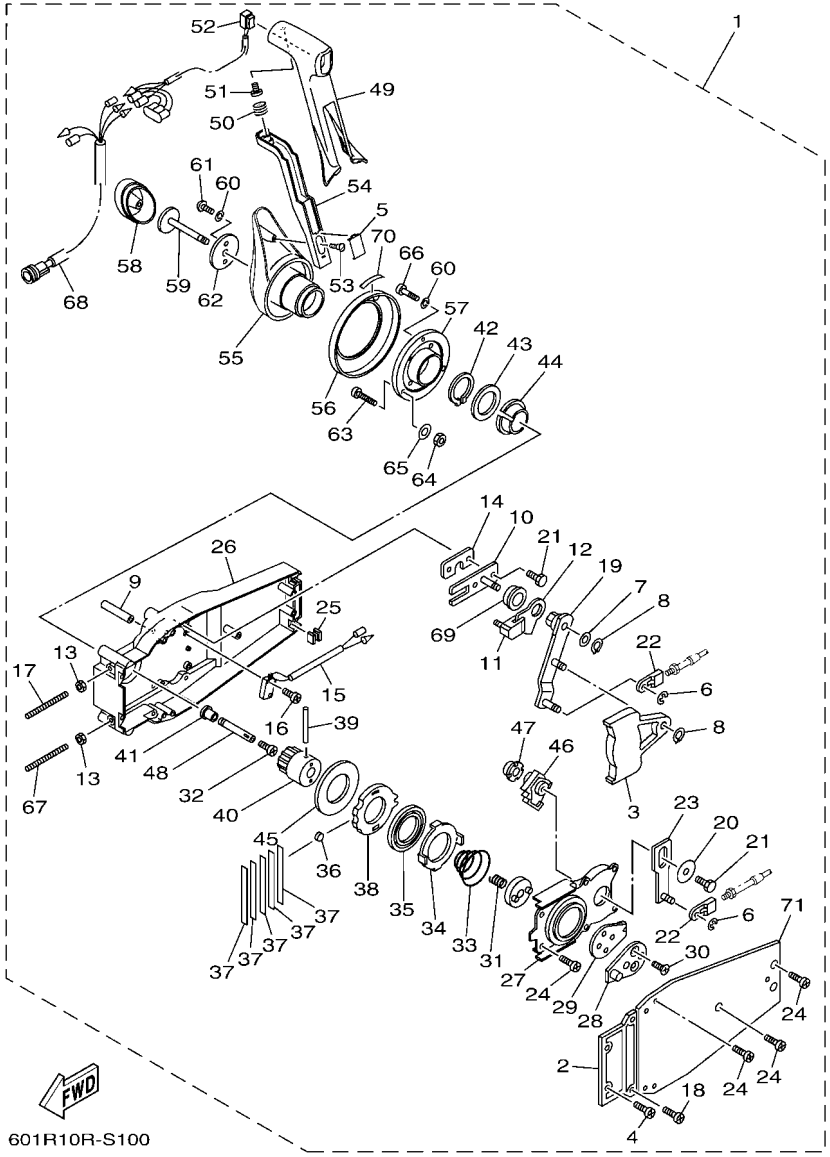

FIG. 10 REMOTE CONTROL ASSY 7

REF. NO.	PART NO.	DESCRIPTION	601R					REMARKS
28	EL8–48241–00	.ARM, DRIVE	1					
29	EL8–48254–00	.STOPPER, THROTTLE ADJUSTING	1					
30	92780–06020	.SCREW, FLAT HEAD	2					
31	EL8–48158–00	.SPRING 1	1					
32	98580–04006	.SCREW, PAN HEAD	1					
33	EL8–48244–00	.SPRING, FREE ACCEL.	1					
34	EL8–48245–00	.PLATE, LOCK	1					
35	704–48178–00	.PLATE, SHIFT	1					
36	701–48248–00	.ROLLER, FREE ACCEL.	1					
37	704–48238–00	.SPRING, DETENT	5					
38	6X0–48121–00	.GEAR 1	1					
39	EL8–48164–00	.PIN 2	1					
40	EL8–48242–10	.SHAFT, DRIVE	1					
41	702–48263–00	.BUSHING	1					
42	EL8–48279–00	.CIRCLIP 2	1					
43	704–48193–00	.WASHER 3	1					
44	EL8–48234–00	.BUSHING 1	1					
45	703–48192–00	.WASHER 2	1					
46	EL8–48233–00	.GEAR 2	1					
47	702–48235–00	.BUSHING	1					
48	6X0–48153–00	.SHAFT, FREE ACCEL.	1					
49	6X3–48222–20	.GRIP, CONTROL LEVER	1					
50	703–48227–00	.SPRING, NEUTRAL LOCK	1					
51	98580–05008	.SCREW, PAN HEAD	1					
52	6X3–82563–02	.TRIM & TILT SWITCH ASSY	1					
53	6X3–48254–00	.STOPPER, THROTTLE ADJUST	1					
54	6X3–48223–10	.LOCK, NEUTRAL	1					

6X3 REMOTE CONTROL (LEFT MOUNT)

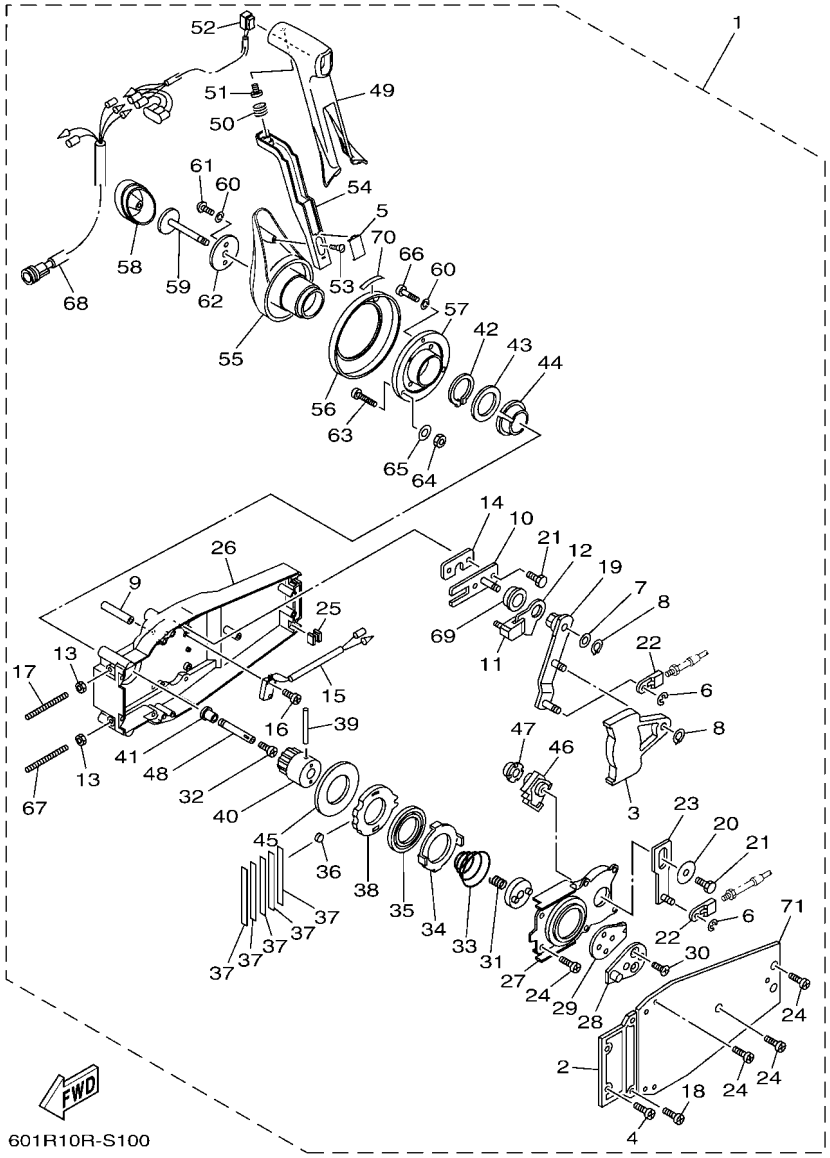

FIG. 10 REMOTE CONTROL ASSY 7

REF. NO.	PART NO.	DESCRIPTION	601R					REMARKS
55	6X3–48221–20	.LEVER, CONTROL	1					
56	6X0–48225–00	.COVER	1					
57	6X3–48111–10	.BODY, REMOTE CONTROL 1	1					
58	6X3–48225–30	.COVER	1					
59	6X0–48155–00	.PLUNGER	1					
60	92990–05300	.WASHER, INTERNAL TOOTH	6					
61	6X0–48281–00	.SCREW	2					
62	6X0–48193–00	.WASHER 3	1					
63	97890–06035	.SCREW, PAN HEAD	3					UR
	6X0–48128–00	.SCREW(M6X30)	3					UR
64	6X0–48156–00	.NUT 1	3					
65	701–48287–00	.WASHER	3					
66	6X3–48129–00	.SCREW 3	4					
67	704–48281–00	.SCREW	1					
68	704–82541–10	.WIRE, LEAD	1					
69	6X0–48116–00	.BUSHING	1					
70	6X3–44191–00	.INDICATOR, SHIFT	1					
71	EL8–48213–00	.BACK PLATE 2	1					

6X5 REMOTE CONTROL (TRIPLE)

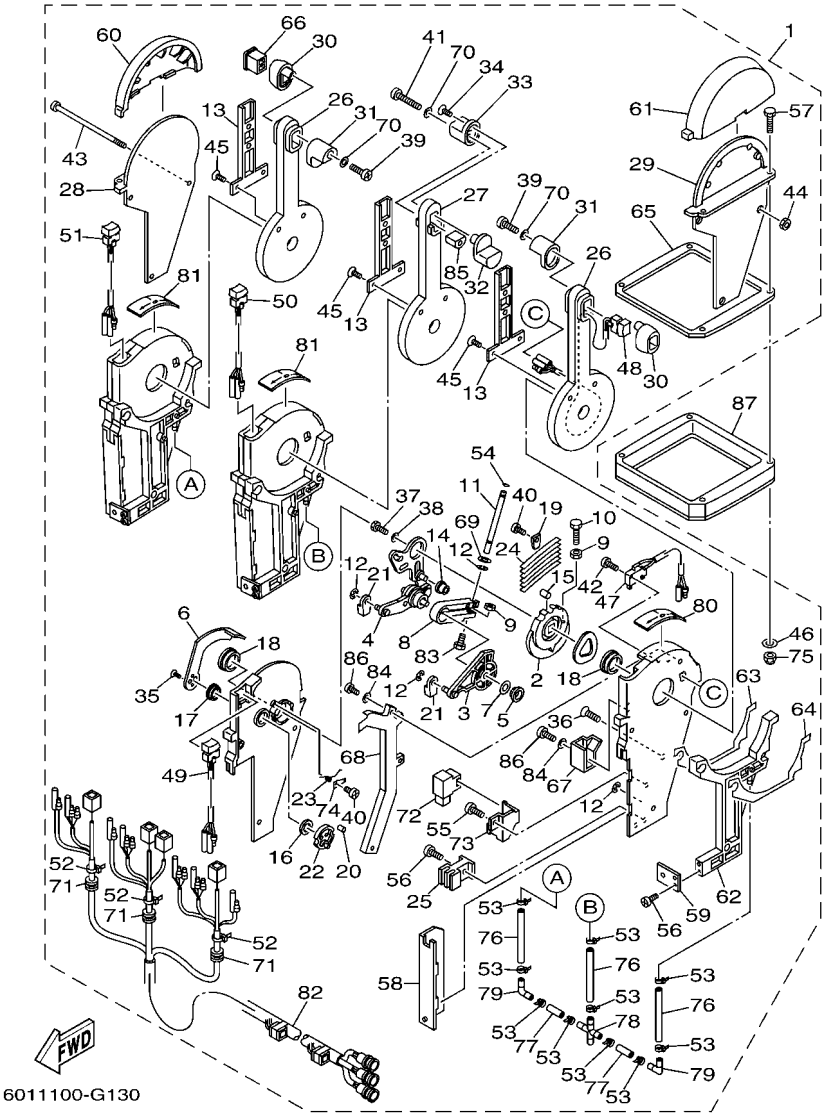

FIG. 11 REMOTE CONTROL ASSY 8

REF. NO.	PART NO.	DESCRIPTION	601R					REMARKS
1	6X5–48207–03	REMOTE CONTROL ASSY	1					WITH PT/T SW.
2	6X5–48232–00	.GEAR	3					
3	6X5–48271–00	.ARM, SHIFT	3					
4	6X5–48261–00	.ARM, THROTTLE	3					
5	703–48235–00	.BUSHING	3					
6	6X5–48152–00	.KNOB, FREE ACCEL.	3					
7	703–48268–00	.SPACER	3					
8	6X5–48264–00	.FRICTION, THROTTLE	3					
9	95380–05600	.NUT	6					
10	97380–05025	.BOLT	3					
11	6X5–48265–00	.SHAFT, FRICTION	3					
12	93430–06024	.CIRCLIP	12					
13	6X5–48224–00	.COVER, CONTROL LEVER	3					
14	703–48252–00	.ROLLER, CAM	3					
15	701–48248–00	.ROLLER, FREE ACCEL.	3					
16	703–48198–00	.WASHER, WAVE	3					
17	703–48243–00	.BUSHING	3					
18	703–48236–00	.BUSHING 1	6					
19	703–48189–00	.RETAINER	3					
20	703–48234–00	.ROLLER, DETENT	3					
21	703–48345–01	.CABLE END, REMOTE CONTROL 2	6					
22	703–48153–00	.SHAFT, FREE ACCEL.	3					
23	703–48244–00	.SPRING, FREE ACCEL.	3					
24	703–48238–00	.SPRING, DETENT	18					
25	6X5–48358–00	.ANCHOR, CABLE	3					
26	6X5–48221–00	.LEVER, CONTROL	2					
27	6X5–48221–10	.LEVER, CONTROL	1					

6X5 REMOTE CONTROL (TRIPLE)

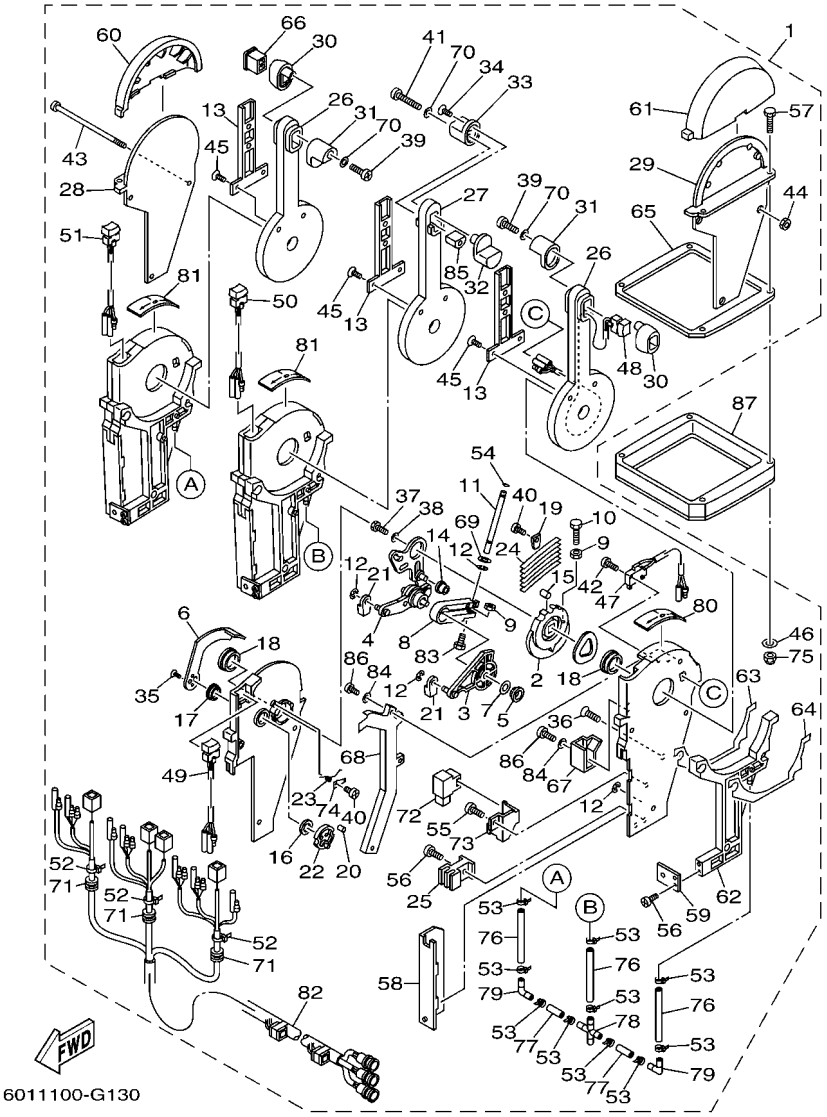

FIG. 11 REMOTE CONTROL ASSY 8

REF. NO.	PART NO.	DESCRIPTION	601R					REMARKS
28	6X5–48144–10	.PLATE, STOPPER 2	1					
29	6X5–48144–00	.PLATE, STOPPER 2	1					
30	6X5–48229–01	.GRIP, CONTROL LEVER	2					
31	6X5–48222–01	.GRIP, CONTROL LEVER	2					
32	6X5–48229–11	.GRIP, CONTROL LEVER	1					
33	6X5–48222–11	.GRIP, CONTROL LEVER	1					
34	6X5–48127–00	.SCREW 1	1					
35	703–48128–00	.SCREW 2	6					
36	6X5–48129–00	.SCREW 3	9					
37	97380–08030	.BOLT	3					
38	92990–08200	.WASHER, PLAIN	3					
39	6X5–48127–10	.SCREW 1	2					
40	98580–04006	.SCREW, PAN HEAD	6					
41	6X5–48127–20	.SCREW 1	1					
42	703–48129–00	.SCREW 3	6					
43	6X5–48267–00	.BOLT SET	3					
44	6X0–48156–00	.NUT 1	3					
45	98780–04010	.SCREW, FLAT HEAD	6					
46	704–48287–00	.WASHER	4					
47	6X5–82540–00	.NEUTRAL SWITCH ASSY	3					
48	6X5–82563–02	.TRIM & TILT SWITCH ASSY	1					
49	6X5–82563–12	.TRIM & TILT SWITCH ASSY	1					
50	6X5–82563–22	.TRIM & TILT SWITCH ASSY	1					
51	6X5–82563–32	.TRIM & TILT SWITCH ASSY	1					
52	703–82591–00	.BAND	3					
53	6X4–42821–00	.BAND, CLAMP	14					
54	6X5–48351–00	.SEAL, RUBBER	3					

6X5 REMOTE CONTROL (TRIPLE)

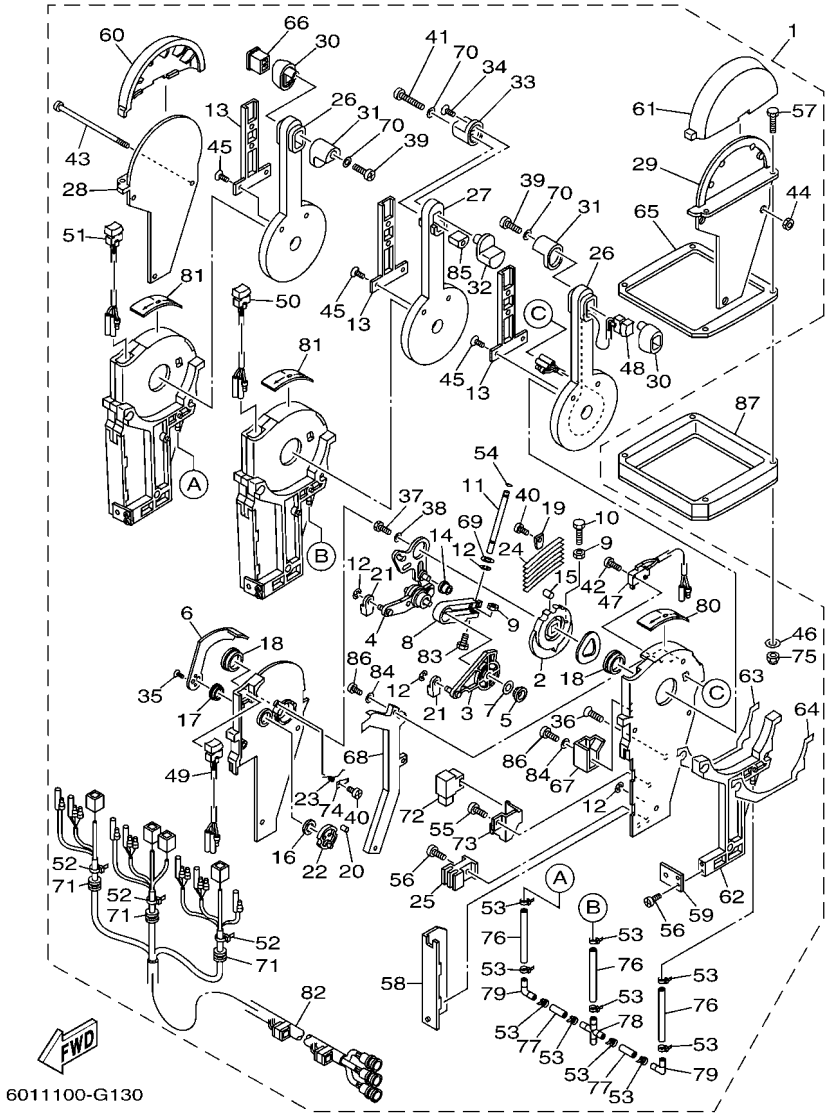

FIG. 11 REMOTE CONTROL ASSY 8

REF. NO.	PART NO.	DESCRIPTION	601R					REMARKS
55	98580–05010	.SCREW, PAN HEAD	3					
56	98580–05012	.SCREW, PAN HEAD	12					
57	98580–05040	.SCREW, PAN HEAD	4					UR
	97780–05130	.SCREW, TAPPING	4					UR
58	6X5–48213–00	.BACK PLATE 2	3					
59	6X5–48354–00	.SET-PLATE, CABLE	3					
60	6X5–48119–11	.COVER	1					
61	6X5–48119–01	.COVER	1					
62	6X5–48246–00	.SPACER	3					
63	6X5–48214–00	.PAD	3					
64	6X5–48214–10	.PAD	3					
65	6X5–48176–00	.GROMMET	1					
66	6X5–48222–21	.GRIP, CONTROL LEVER	1					
67	6X5–48219–00	.COVER, LEAD	3					
68	6X5–48225–00	.COVER	3					
69	92990–08600	.WASHER, PLATE	3					
70	92990–05300	.WASHER, INTERNAL TOOTH	3					
71	6X5–48175–00	.BOOT	3					
72	704–81950–10	.RELAY ASSY	4					
73	6X5–48228–00	.HOLDER, SWITCH	3					
74	703–48246–00	.SPACER	3					
75	95380–06600	.NUT, HEXAGON	4					
76	6X5–48317–00	.TUBE	3					
77	6X5–48317–10	.TUBE	2					
78	6X5–48338–00	.CONNECTOR	1					
79	6X5–48338–10	.CONNECTOR	2					
80	6X5–48215–00	.GRAPHIC	1					

6X5 REMOTE CONTROL (TRIPLE)

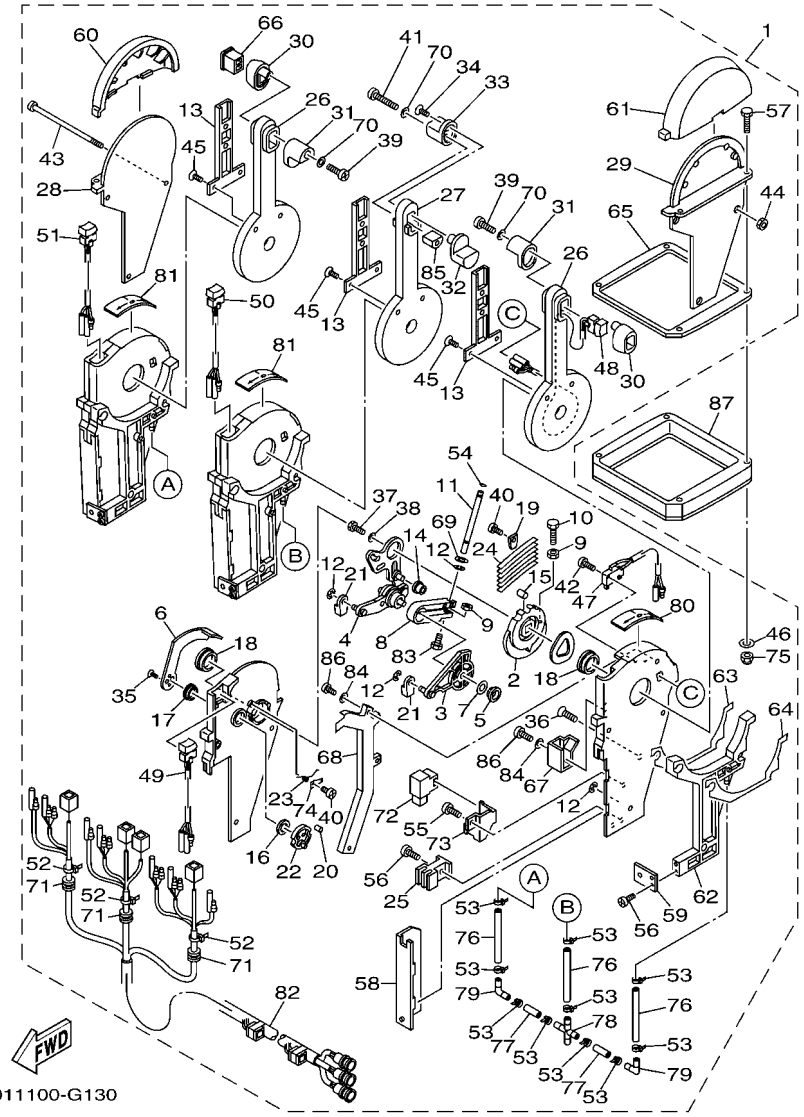

FIG. 11 REMOTE CONTROL ASSY 8

REF. NO.	PART NO.	DESCRIPTION	601R					REMARKS
81	6X5–48215–10	.GRAPHIC	2					
82	6X5–82590–00	.WIRE HARNESS ASSY	1					
83	6X5–48267–00	.BOLT SET	3					
84	92990–05200	.WASHER, PLAIN	15					
85	6X5–48222–30	.GRIP, CONTROL LEVER	1					
86	98580–05012	.SCREW, PAN HEAD	15					
87	6X5–48293–00	SPACER, REMOTE CONTROL	1					LM

FIG. 12 REMOTE CONTROL CABLES

REMOTE CONTROL CABLE

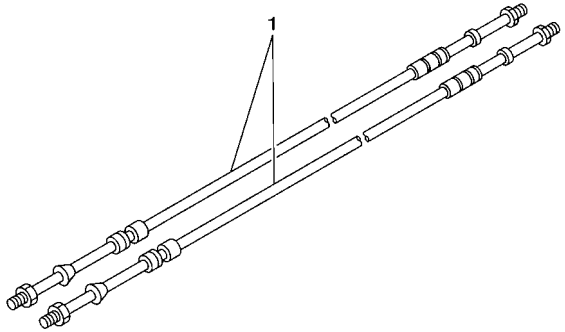

6011100-G140

REF. NO.	PART NO.	DESCRIPTION	601R					REMARKS
1	701–48310–10	CABLE, REMOTE CONTROL L=6F	2					UR
	701–48310–20	CABLE, REMOTE CONTROL L=7F	2					UR
	701–48310–40	CABLE, REMOTE CONTROL L=8F	2					UR
	701–48310–60	CABLE, REMOTE CONTROL L=9F	2					UR
	701–48310–80	CABLE, REMOTE CONTROL L=10F	2					UR
	701–48310–90	CABLE, REMOTE CONTROL L=11F	2					UR
	701–48320–00	CABLE, REMOTE CONTROL L=12F	2					UR
	701–48320–20	CABLE, REMOTE CONTROL L=13F	2					UR
	701–48320–30	CABLE, REMOTE CONTROL L=14F	2					UR
	701–48320–50	CABLE, REMOTE CONTROL L=15F	2					UR
	701–48320–60	CABLE, REMOTE CONTROL L=16F	2					UR
	701–48320–80	CABLE, REMOTE CONTROL L=17F	2					UR
	701–48320–90	CABLE, REMOTE CONTROL L=18F	2					UR
	701–48320–40	CABLE, REMOTE CONTROL L=19F	2					UR
	701–48320–70	CABLE, REMOTE CONTROL L=20F	2					UR
	701–48350–00	CABLE, REMOTE CONTROL L=21F	2					UR
	701–48350–10	CABLE, REMOTE CONTROL L=22F	2					UR
	701–48350–20	CABLE, REMOTE CONTROL L=23F	2					UR
	701–48350–30	CABLE, REMOTE CONTROL L=24F	2					UR
	701–48350–40	CABLE, REMOTE CONTROL L=25F	2					UR
	701–48350–50	CABLE, REMOTE CONTROL L=26F	2					UR
	701–48350–60	CABLE, REMOTE CONTROL L=27F	2					UR
	701–48350–70	CABLE, REMOTE CONTROL L=31F	2					UR

REMOTE CONTROL SPECIFICATION LIST (6X6 TYPE)

TYPE : 6X6	MECHANICAL SPECIFICATION								
TYPE : 6X6	LIST UP SEC.	VARIATION CODE	ENGINE				SINGLE STATION	DUAL STATION	
PART NO.	FIG.NO.-REF.NO.		SINGLE	TWIN	TRIPLE	QUAD		MAIN	SUB
6X6-48205-61	13-1	A	○	*	*	*	○	*	*
6X6-48205-71		C	○	*	*	*	*	○	*
6X6-48205-81		G	○	*	*	*	*	*	○
6X6-48207-61	14-1	B	*	○	*	*	○	*	*
6X6-48207-71		D	*	○	*	*	*	○	*
6X6-48207-81		H	*	○	*	*	*	*	○
6X6-48208-61	15-1	F	*	*	○	*	*	○	*
6X6-48208-71		K	*	*	○	*	*	*	○
6X6-48209-21	16-1	L	*	*	*	○	*	○	*
6X6-48209-31		M	*	*	*	○	*	*	○

6X6 REMOTE CONTROL (SINGLE)

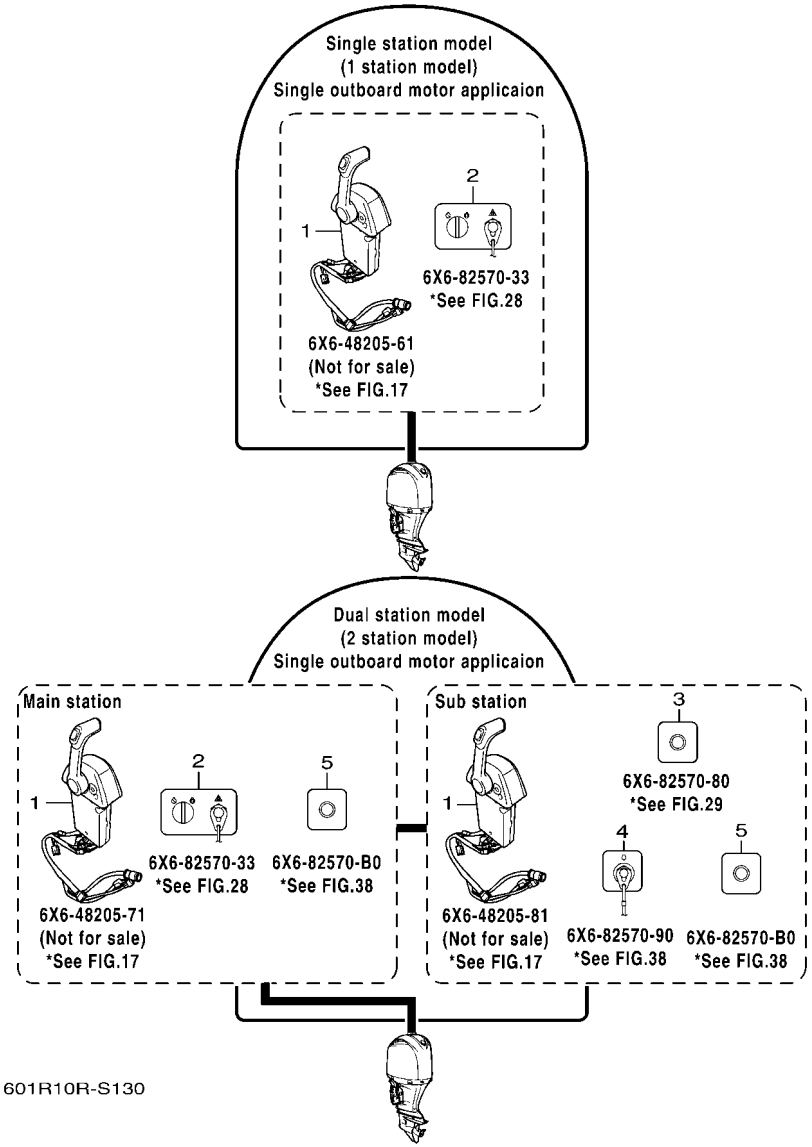

FIG. 13 LAYOUT CHART 1 (SINGLE)

REF. NO.	PART NO.	DESCRIPTION	601R					REMARKS
1	6X6–48205–61	REMOTE CONTROL ASSY (SINGLE)	1					NOT FOR SALE
	6X6–48205–71	REMOTE CONTROL ASSY (SINGLE)	1					NOT FOR SALE
	6X6–48205–81	REMOTE CONTROL ASSY (SINGLE)	1					NOT FOR SALE
2	6X6–82570–33	PANEL SWITCH ASSY	1					1 & 2 STATION MAIN
3	6X6–82570–80	PANEL SWITCH ASSY	1					2 STATION SUB
4	6X6–82570–90	PANEL SWITCH ASSY	1					2 STATION SUB
5	6X6–82570–B0	PANEL SWITCH ASSY	2					2 STATION MAIN & SUB

6X6 REMOTE CONTROL (TWIN)

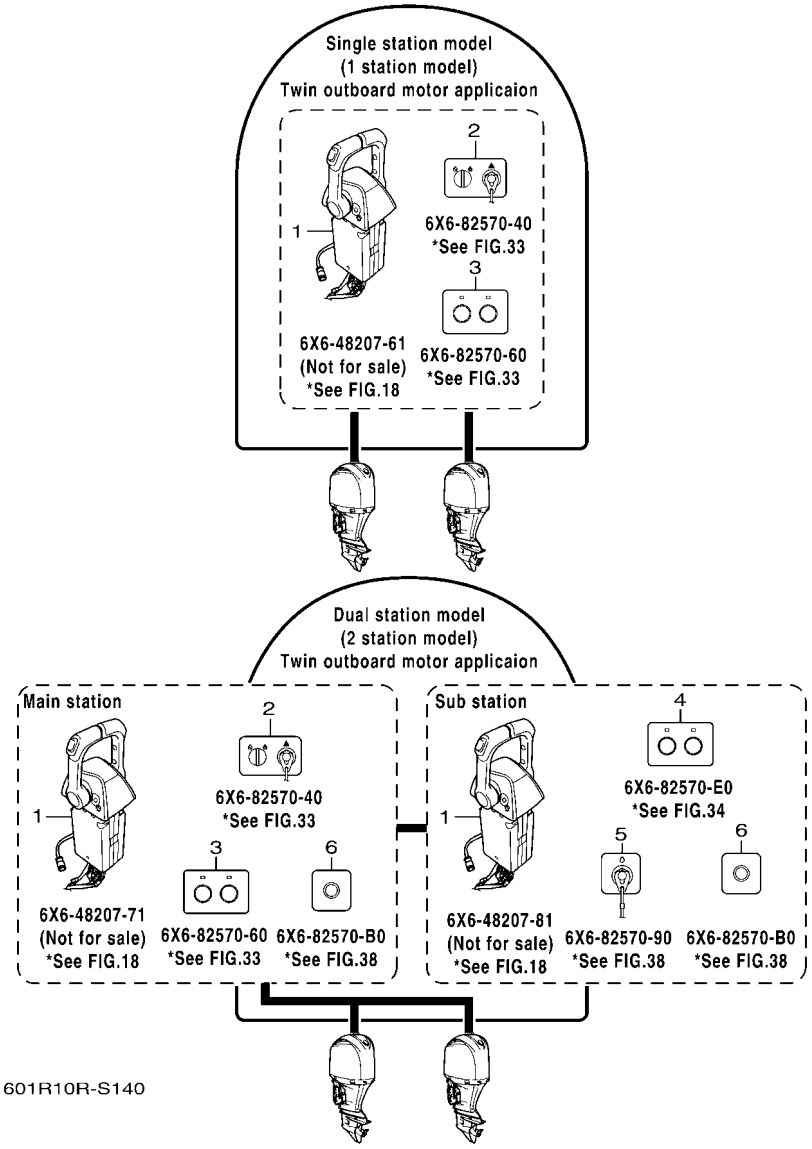

FIG. 14 LAYOUT CHART 2 (TWIN)

REF. NO.	PART NO.	DESCRIPTION	601R					REMARKS
1	6X6–48207–61	REMOTE CONTROL ASSY (TWIN)	1					NOT FOR SALE
	6X6–48207–71	REMOTE CONTROL ASSY (TWIN)	1					NOT FOR SALE
	6X6–48207–81	REMOTE CONTROL ASSY (TWIN)	1					NOT FOR SALE
2	6X6–82570–40	PANEL SWITCH ASSY	1					1 & 2 STATION MAIN
3	6X6–82570–60	PANEL SWITCH ASSY	1					1 & 2 STATION MAIN
4	6X6–82570–E0	PANEL SWITCH ASSY	1					2 STATION SUB
5	6X6–82570–90	PANEL SWITCH ASSY	1					2 STATION SUB
6	6X6–82570–B0	PANEL SWITCH ASSY	2					2 STATION MAIN & SUB

6X6 REMOTE CONTROL (TRIPLE)

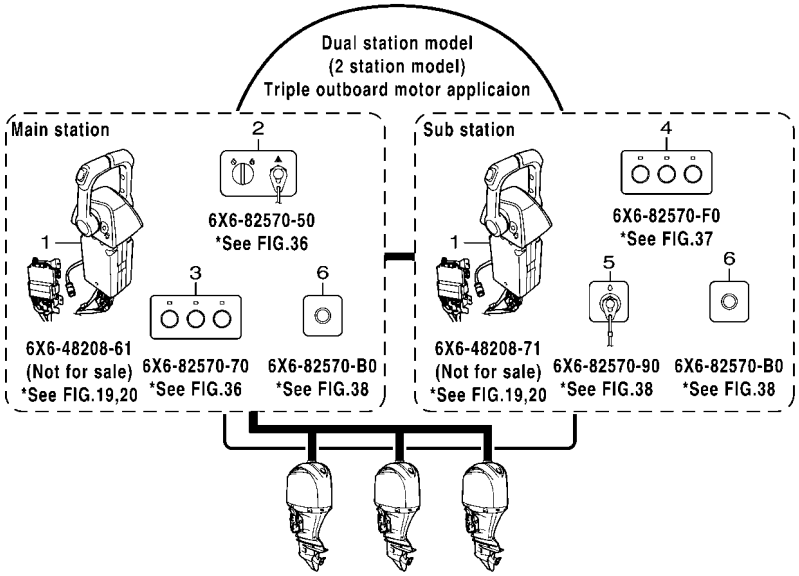

601R10R-S150

FIG. 15 LAYOUT CHART 3 (TRIPLE)

REF. NO.	PART NO.	DESCRIPTION	601R					REMARKS
1	6X6–48208–61	REMOTE CONTROL ASSY (TRIPLE)	1					NOT FOR SALE
	6X6–48208–71	REMOTE CONTROL ASSY (TRIPLE)	1					NOT FOR SALE
2	6X6–82570–50	PANEL SWITCH ASSY	1					1 & 2 STATION MAIN
3	6X6–82570–70	PANEL SWITCH ASSY	1					1 & 2 STATION MAIN
4	6X6–82570–F0	PANEL SWITCH ASSY	1					2 STATION SUB
5	6X6–82570–90	PANEL SWITCH ASSY	1					2 STATION SUB
6	6X6–82570–B0	PANEL SWITCH ASSY	2					2 STATION MAIN & SUB

6X6 REMOTE CONTROL (QUAD)

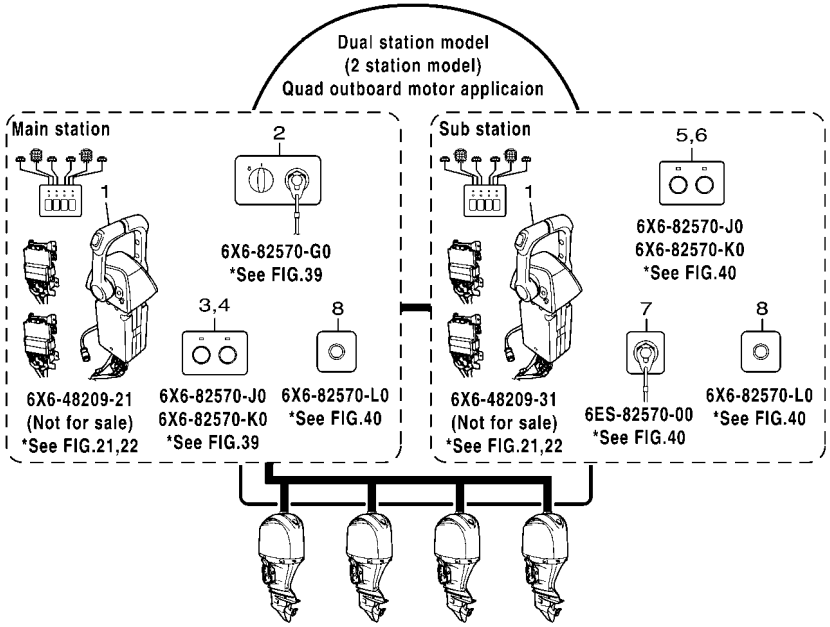

601R10R-S160

FIG. 16 LAYOUT CHART 4 (QUAD)

REF. NO.	PART NO.	DESCRIPTION	601R					REMARKS
1	6X6–48209–21	REMOTE CONTROL ASSY (QUAD)	1					NOT FOR SALE
	6X6–48209–31	REMOTE CONTROL ASSY (QUAD)	1					NOT FOR SALE
2	6X6–82570–G0	PANEL SWITCH ASSY	1					1 & 2 STATION MAIN
3	6X6–82570–J0	PANEL SWITCH ASSY (PORT-P/CP)	1					1 & 2 STATION MAIN
4	6X6–82570–K0	PANEL SWITCH ASSY (STBD-CS/S)	1					1 & 2 STATION MAIN
5	6X6–82570–J0	PANEL SWITCH ASSY (PORT-P/CP)	1					2 STATION SUB
6	6X6–82570–K0	PANEL SWITCH ASSY (STBD-CS/S)	1					2 STATION SUB
7	6ES–82570–00	ENGINE STOP SWITCH ASSY (QUAD)	1					2 STATION SUB
8	6X6–82570–L0	PANEL SWITCH ASSY	2					2 STATION MAIN & SUB

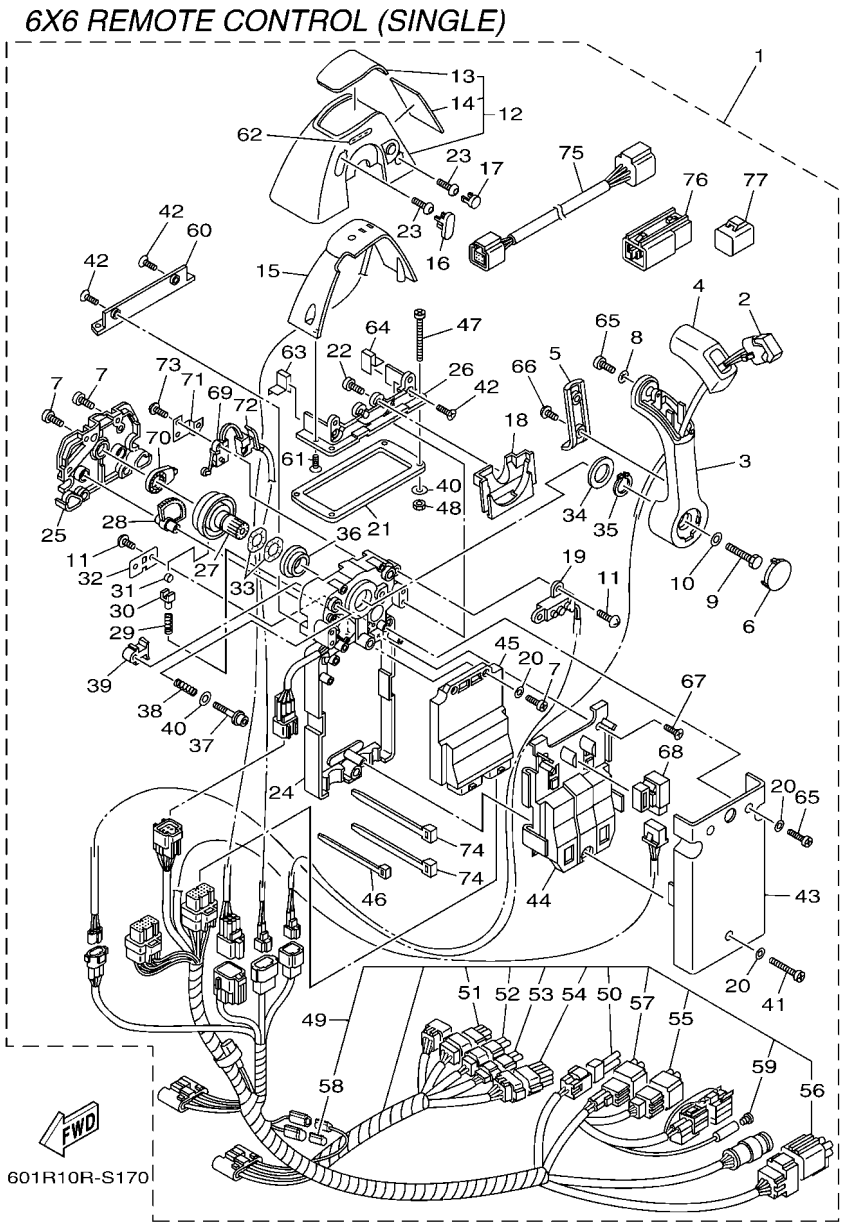

FIG. 17 DBW REMOTE CONTROL 1 (SINGLE)

REF. NO.	PART NO.	DESCRIPTION	601R					REMARKS
1	6X6–48205–61	REMOTE CONTROL ASSY (SINGLE)	1					NOT FOR SALE
	6X6–48205–71	REMOTE CONTROL ASSY (SINGLE)	1					NOT FOR SALE
	6X6–48205–81	REMOTE CONTROL ASSY (SINGLE)	1					NOT FOR SALE
2	6X6–82563–01	.TRIM & TILT SWITCH ASSY	1					
3	6X6–48221–00	.LEVER, CONTROL	1					
4	6X6–48222–00	.GRIP, CONTROL LEVER	1					
5	6X6–48224–00	.COVER, CONTROL LEVER	1					
6	6X6–48224–10	.COVER, CONTROL LEVER	1					
7	98580–05014	.SCREW, PAN HEAD	6					
8	92990–05300	.WASHER, INTERNAL TOOTH	1					
9	6X6–48171–00	.BOLT	1					
10	92990–08600	.WASHER, PLATE	1					
11	EL8–48127–00	.SCREW 1	4					
12	6X6–48119–04	.COVER	1					
13	6X6–48215–30	..GRAPHIC	1					
14	6X6–48216–00	..GRAPHIC	1					
15	6X6–84301–00	.PILOT LIGHT ASSY 1	1					
16	6X6–48167–00	.PLUG	1					
17	6X6–48167–50	.PLUG	1					
18	6X6–48219–00	.COVER, LEAD	1					
19	6X6–8259E–00	.SWITCH ASSY	1					
20	92990–05200	.WASHER, PLAIN	5					
21	6X6–48176–00	.GROMMET	1					
22	98580–04010	.SCREW, PAN HEAD	2					
23	6X6–48267–C0	.BOLT SET	2					
24	6X6–481A0–02	.REMO-CON. CASE ASSY	1					
25	6X6–48212–00	.BACK PLATE 1	1					

6X6 REMOTE CONTROL (SINGLE)

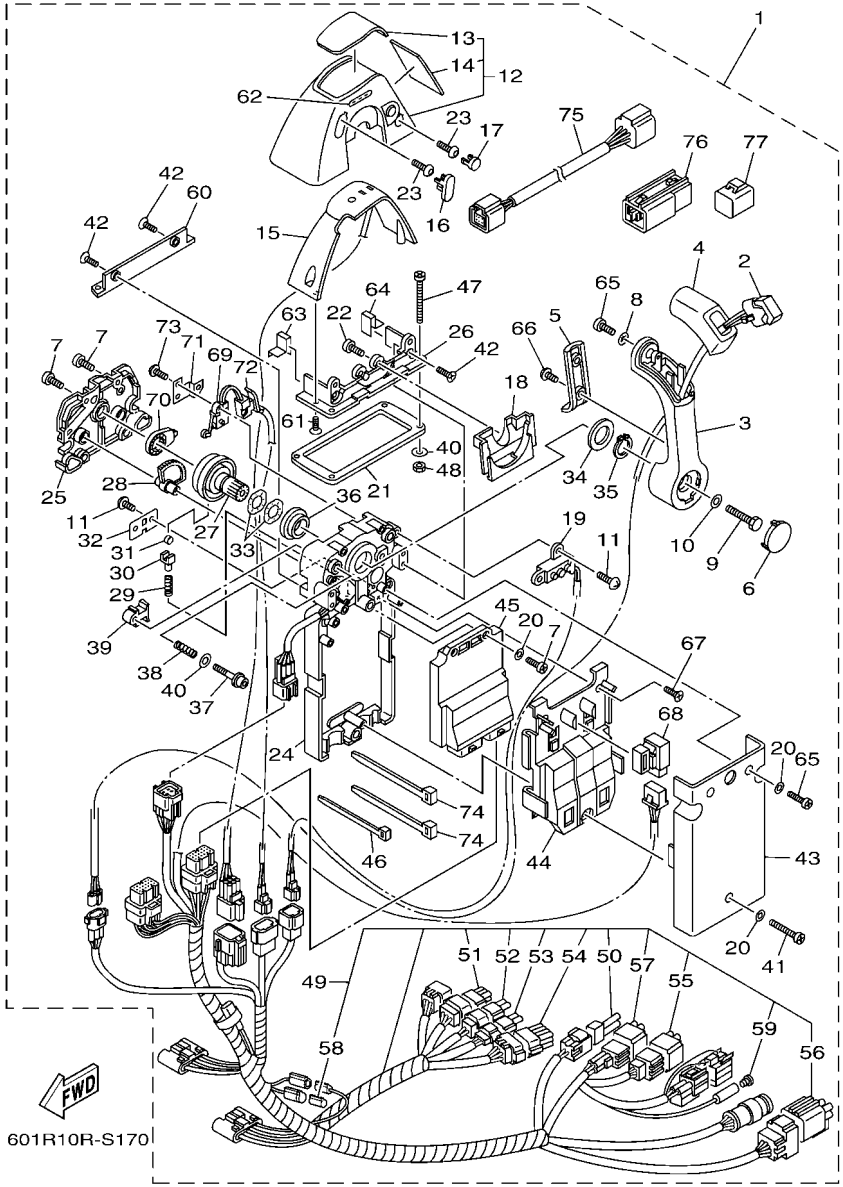

FIG. 17 DBW REMOTE CONTROL 1 (SINGLE)

REF. NO.	PART NO.	DESCRIPTION	601R					REMARKS
26	6X6–48144–10	.PLATE, STOPPER 2	1					
27	6X6–48242–02	.SHAFT, DRIVE	1					
28	6X6–48233–01	.GEAR 2	1					
29	6X6–48238–00	.SPRING, DETENT	1					
30	6X6–48237–00	.ADAPTOR	1					
31	6X6–48236–00	.ROLLER, DETENT	1					
32	6X6–48189–00	.RETAINER	1					
33	703–48198–00	.WASHER, WAVE	2					
34	6X6–48193–00	.WASHER 3	1					
35	6X6–48118–00	.CLIP, SHIFT LEVER	1					
36	6X6–48234–00	.BUSHING 1	1					
37	6X6–48267–00	.BOLT SET	1					
38	6X6–48158–00	.SPRING 1	1					
39	6X6–48264–00	.FRICTION, THROTTLE	1					
40	704–48287–00	.WASHER	5					
41	6X6–81145–01	.SCREW 1	1					
42	6X6–81147–00	.SCREW 3	4					
43	6X6–48213–00	.BACK PLATE 2	1					
44	6X6–48228–01	.HOLDER, SWITCH	1					
45	6X6–85590–31	.CONTROL UNIT ASSY	1					
46	703–82591–00	.BAND	2					
47	97780–50145	.SCREW, TAPPING	4					UR
	98580–05060	.SCREW, PAN HEAD	4					UR
48	95380–05600	.NUT	4					
49	6X6–82580–J0	.WIRE HARNESS ASSY 2	1					FOR 6X6-48205-61
	6X6–82580–A0	.WIRE HARNESS ASSY 2	1					FOR 6X6-48205-71
	6X6–82580–E0	.WIRE HARNESS ASSY 2	1					FOR 6X6-48205-81

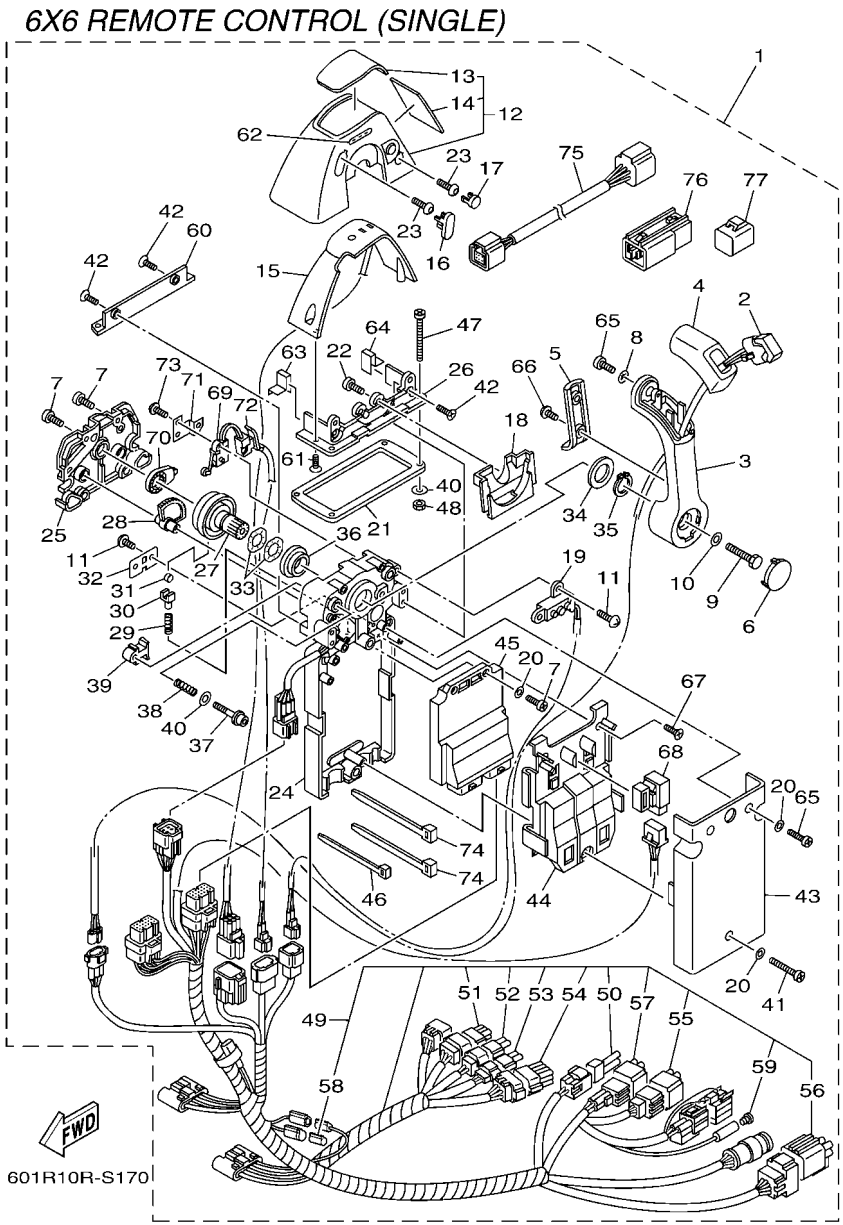

FIG. 17 DBW REMOTE CONTROL 1 (SINGLE)

REF. NO.	PART NO.	DESCRIPTION	601R					REMARKS
50	6X6–82585–20	..CAP 2 (2P)	1					
51	6X6–82582–60	..CAP 1 (6P)	1					FOR 6X6-82580-A0
52	6X6–82582–40	..CAP 1 (4P)	1					FOR 6X6-82580-A0
53	6X6–82582–A0	..CAP 1 (3P)	1					FOR 6X6-82580-A0
54	6X6–82582–C0	..CAP 1 (12P)	1					FOR 6X6-82580-A0
55	6X6–82585–60	..CAP 2 (6P)	1					FOR 6X6-82580-A0/J0
56	6X6–8257Y–70	..CAP 2 (6P)	1					FOR 6X6-82580-A0
57	6Y8–82582–11	..CAP 1 (4PIN)	1					FOR 6X6-82580-A0/J0
58	6X6–82585–00	..CAP 2	1					FOR 6X6-82580-A0/E0
59	703–82119–00	..COVER, LEAD WIRE	1					
60	6X6–48144–00	.PLATE, STOPPER 2	1					
61	6X6–48129–01	.SCREW 3	2					
62	6X6–44191–10	.INDICATOR, SHIFT	1					
63	6X6–48176–50	.GROMMET	1					
64	6X6–48176–60	.GROMMET	1					
65	6X6–48127–01	.SCREW 1	3					
66	6X6–48128–00	.SCREW 2	2					
67	6X6–81146–01	.SCREW 2	2					
68	704–81950–10	.RELAY ASSY	1					
69	6X6–82540–00	.NEUTRAL SWITCH ASSY	1					
70	6X6–48241–00	.ARM, DRIVE	1					
71	6X6–48245–01	.PLATE, LOCK	1					
72	6X6–82545–00	.GROMMET	1					
73	6X6–8252V–00	.SCREW, SPECIAL	2					
74	703–82591–10	.BAND	4					
75	6Y8–82553–50	.10FT MAIN BUS	1					FOR 6X6-48205-61/71
76	6Y8–81920–11	.IN-LINE HUB ASSY	1					FOR 6X6-48205-61/71

6X6 REMOTE CONTROL (SINGLE)

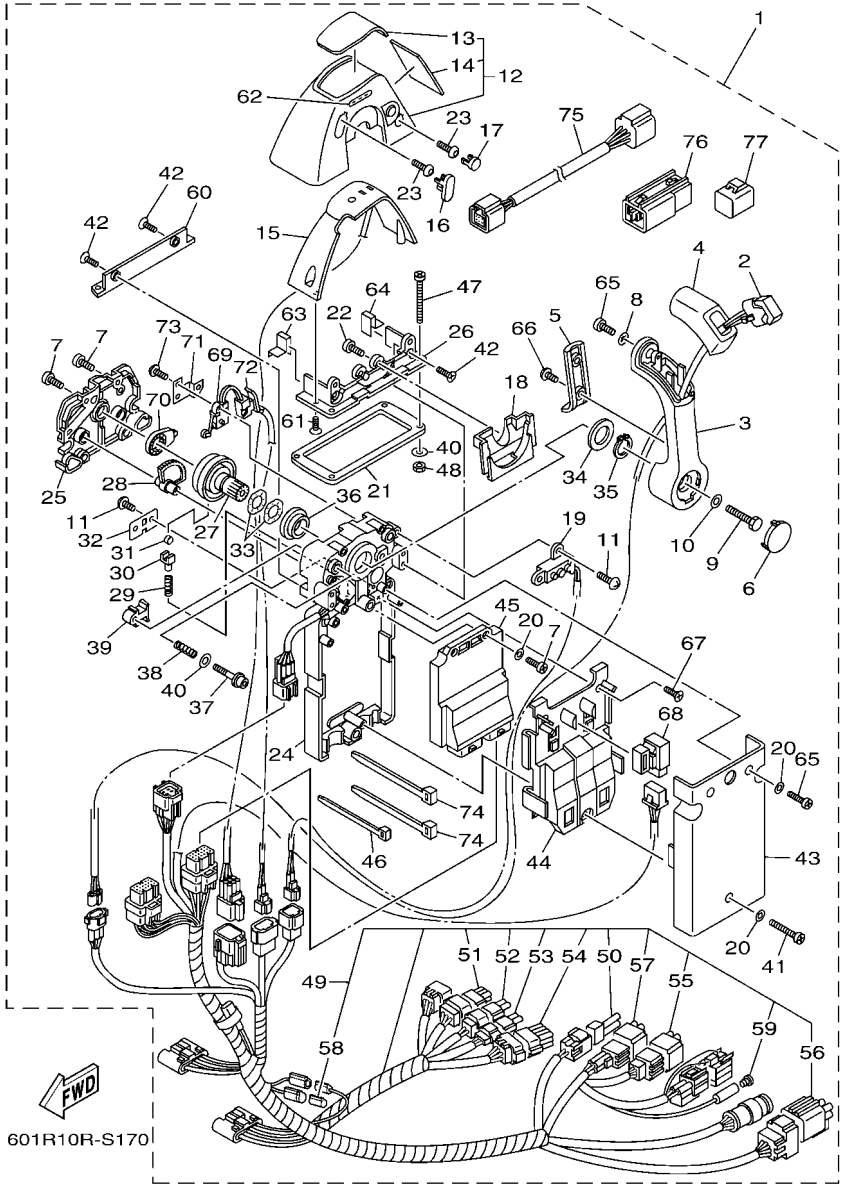

FIG. 17 DBW REMOTE CONTROL 1 (SINGLE)

REF. NO.	PART NO.	DESCRIPTION	601R					REMARKS
77	6Y8–82582–11	.CAP 1 (4PIN)	1					FOR 6X6-48205-61/71

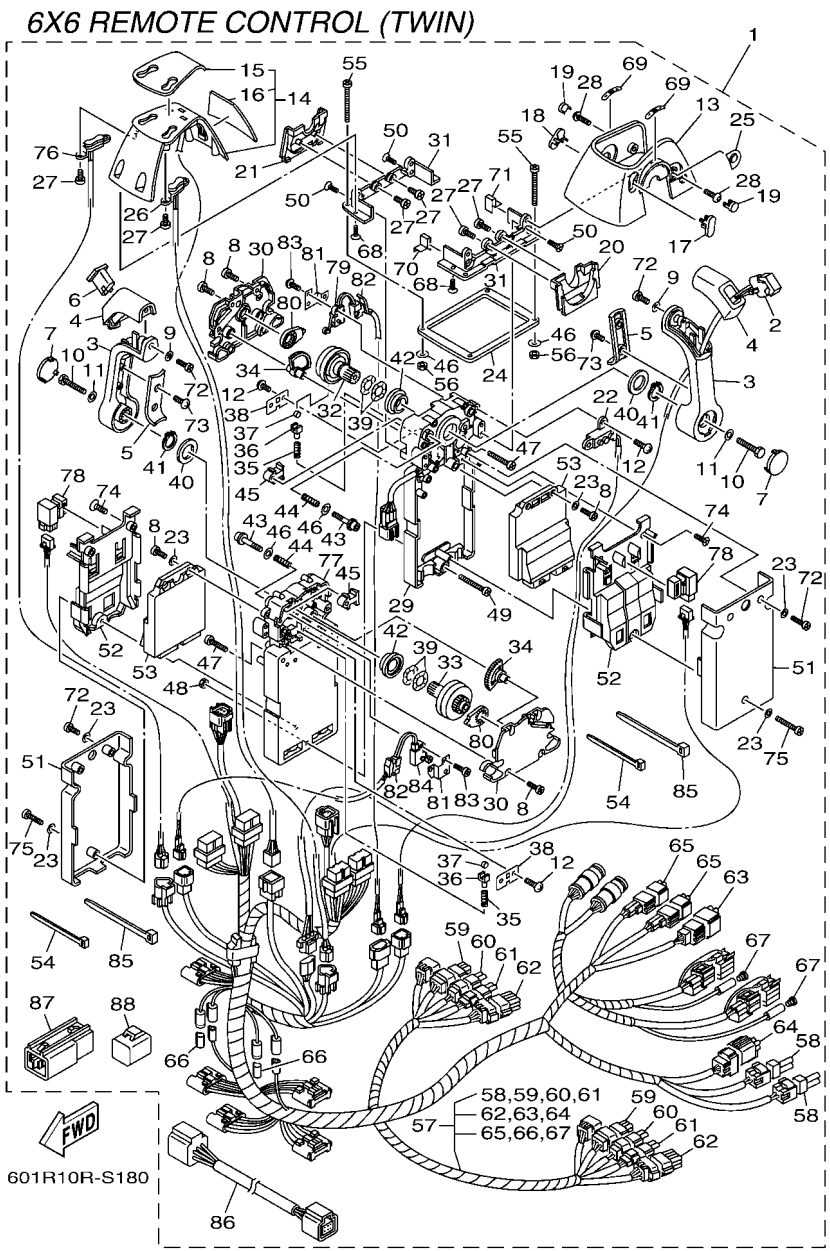

FIG. 18 DBW REMOTE CONTROL 2 (TWIN)

REF. NO.	PART NO.	DESCRIPTION	601R					REMARKS
1	6X6–48207–61	REMOTE CONTROL ASSY (TWIN)	1					NOT FOR SALE
	6X6–48207–71	REMOTE CONTROL ASSY (TWIN)	1					NOT FOR SALE
	6X6–48207–81	REMOTE CONTROL ASSY (TWIN)	1					NOT FOR SALE
2	6X6–82563–01	.TRIM & TILT SWITCH ASSY	1					
3	6X6–48221–00	.LEVER, CONTROL	2					
4	6X6–48222–00	.GRIP, CONTROL LEVER	2					
5	6X6–48224–00	.COVER, CONTROL LEVER	2					
6	6X6–48222–10	.GRIP, CONTROL LEVER	1					
7	6X6–48224–10	.COVER, CONTROL LEVER	2					
8	98580–05014	.SCREW, PAN HEAD	12					
9	92990–05300	.WASHER, INTERNAL TOOTH	2					
10	6X6–48171–00	.BOLT	2					
11	92990–08600	.WASHER, PLATE	2					
12	EL8–48127–00	.SCREW 1	6					
13	6X6–48119–10	.COVER	1					
14	6X6–84301–13	.PILOT LIGHT ASSY 1	1					
15	6X6–48215–40	..GRAPHIC	1					
16	6X6–48216–10	..GRAPHIC	1					
17	6X6–48167–10	.PLUG	1					
18	6X6–48167–20	.PLUG	1					
19	6X6–48167–60	.PLUG	2					
20	6X6–48219–10	.COVER, LEAD	1					
21	6X6–48219–20	.COVER, LEAD	1					
22	6X6–8259E–00	.SWITCH ASSY	1					
23	92990–05200	.WASHER, PLAIN	10					
24	6X6–48176–10	.GROMMET	1					
25	6X6–48225–00	.COVER	1					

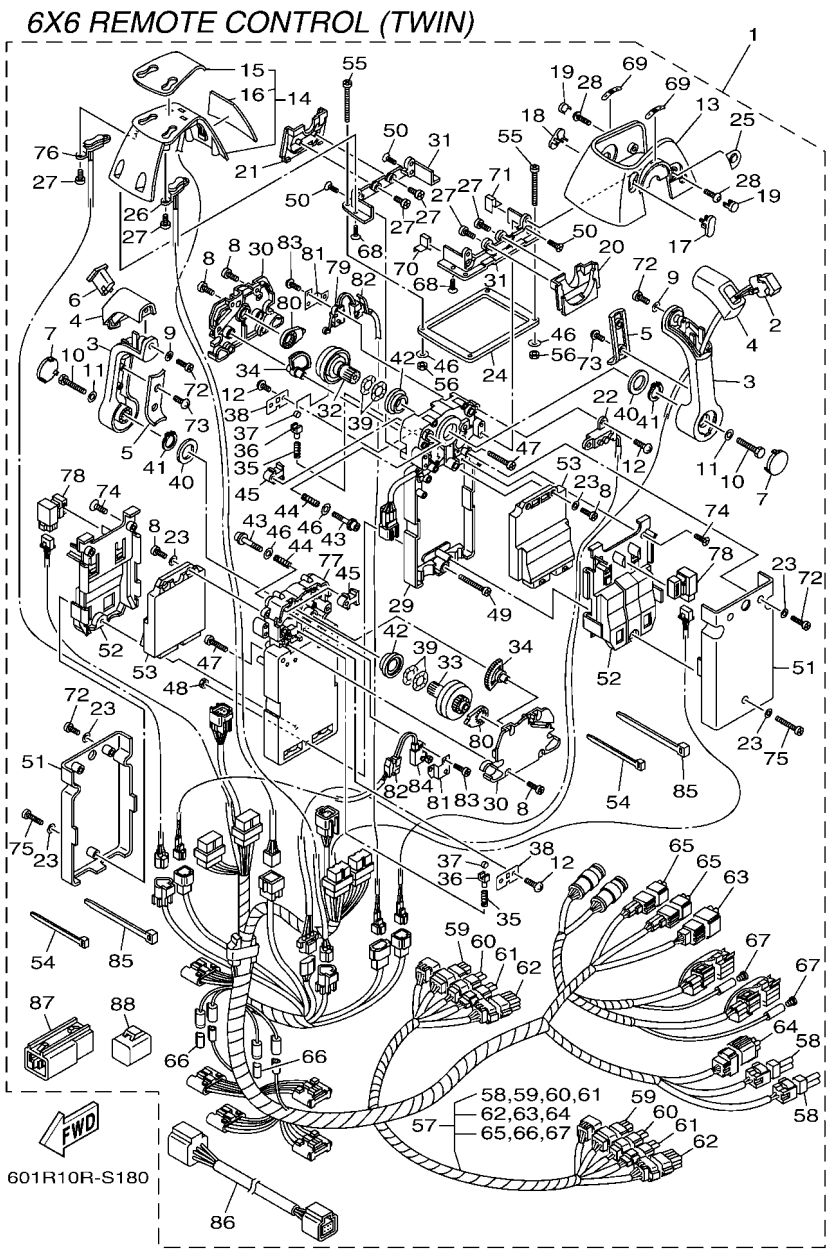

FIG. 18 DBW REMOTE CONTROL 2 (TWIN)

REF. NO.	PART NO.	DESCRIPTION	601R					REMARKS
26	6X6–82563–40	.TRIM & TILT SWITCH ASSY	1					
27	98580–04010	.SCREW, PAN HEAD	8					
28	6X6–48267–C0	.BOLT SET	2					
29	6X6–481A0–02	.REMO-CON. CASE ASSY	1					
30	6X6–48212–00	.BACK PLATE 1	2					
31	6X6–48144–10	.PLATE, STOPPER 2	2					
32	6X6–48242–02	.SHAFT, DRIVE	1					
33	6X6–48242–12	.SHAFT, DRIVE	1					
34	6X6–48233–01	.GEAR 2	2					
35	6X6–48238–00	.SPRING, DETENT	2					
36	6X6–48237–00	.ADAPTOR	2					
37	6X6–48236–00	.ROLLER, DETENT	2					
38	6X6–48189–00	.RETAINER	2					
39	703–48198–00	.WASHER, WAVE	4					
40	6X6–48193–00	.WASHER 3	2					
41	6X6–48118–00	.CLIP, SHIFT LEVER	2					
42	6X6–48234–00	.BUSHING 1	2					
43	6X6–48267–00	.BOLT SET	2					
44	6X6–48158–00	.SPRING 1	2					
45	6X6–48264–00	.FRICTION, THROTTLE	2					
46	704–48287–00	.WASHER	6					
47	98580–05025	.SCREW, PAN HEAD	2					
48	704–48156–00	.NUT 1	1					
49	704–48283–00	.SCREW	1					
50	6X6–81147–00	.SCREW 3	4					
51	6X6–48213–00	.BACK PLATE 2	2					
52	6X6–48228–01	.HOLDER, SWITCH	2					

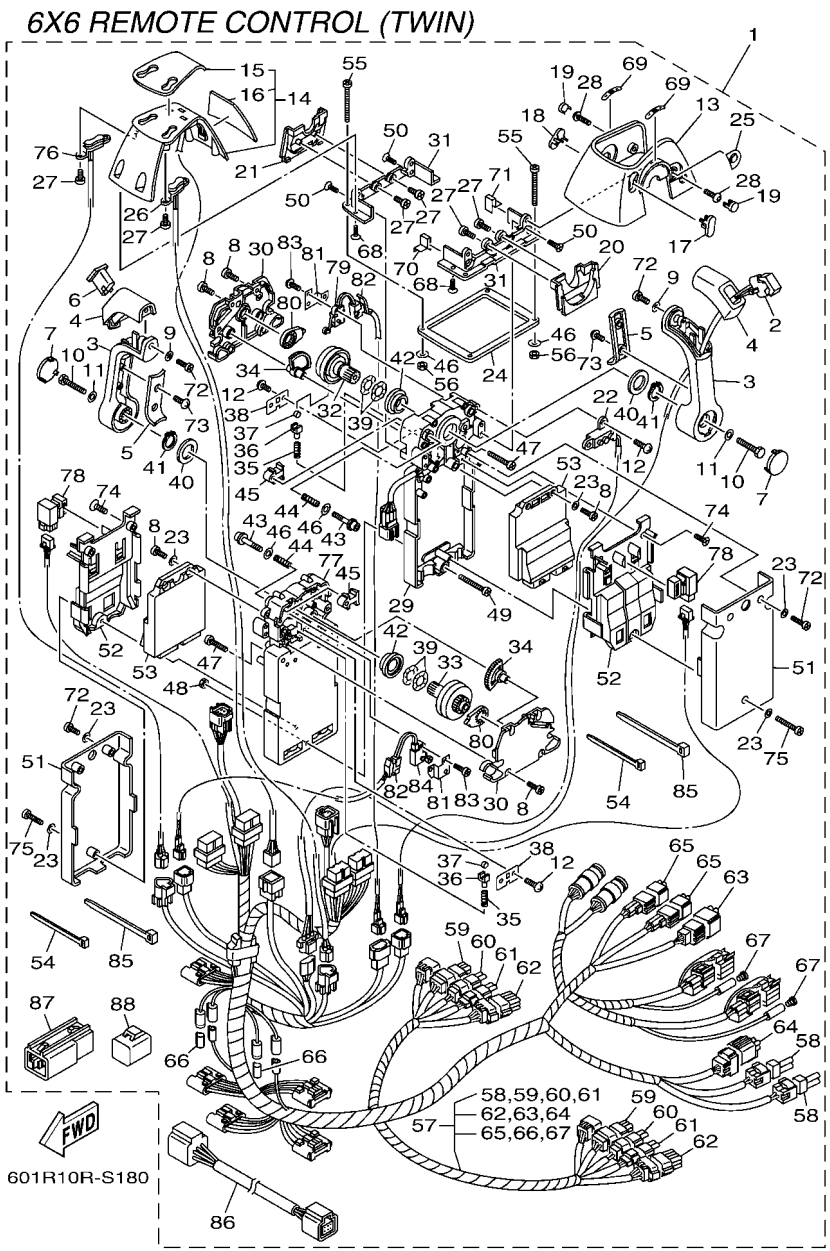

FIG. 18 DBW REMOTE CONTROL 2 (TWIN)

REF. NO.	PART NO.	DESCRIPTION	601R					REMARKS
53	6X6–85590–31	.CONTROL UNIT ASSY	2					
54	703–82591–00	.BAND	4					
55	97780–50145	.SCREW, TAPPING	4					UR
	98580–05060	.SCREW, PAN HEAD	4					UR
56	95380–05600	.NUT	4					
57	6X6–82580–K0	.WIRE HARNESS ASSY 2	1					FOR 6X6-48207-61
	6X6–82580–B0	.WIRE HARNESS ASSY 2	1					FOR 6X6-48207-71
	6X6–82580–F0	.WIRE HARNESS ASSY 2	1					FOR 6X6-48207-81
58	6X6–82585–20	..CAP 2 (2P)	2					
59	6X6–82582–60	..CAP 1 (6P)	2					FOR 6X6-82580-B0
60	6X6–82582–40	..CAP 1 (4P)	2					FOR 6X6-82580-B0
61	6X6–82582–A0	..CAP 1 (3P)	2					FOR 6X6-82580-B0
62	6X6–82582–C0	..CAP 1 (12P)	2					FOR 6X6-82580-B0
63	6X6–82585–70	..CAP 2 (6P)	1					FOR 6X6-82580-B0/K0
64	6X6–8257Y–70	..CAP 2 (6P)	1					FOR 6X6-82580-B0
65	6Y8–82582–11	..CAP 1 (4PIN)	2					FOR 6X6-82580-B0/K0
66	6X6–82585–00	..CAP 2	2					
67	703–82119–00	..COVER, LEAD WIRE	2					
68	6X6–48129–01	.SCREW 3	4					
69	6X6–44191–10	.INDICATOR, SHIFT	2					
70	6X6–48176–50	.GROMMET	1					
71	6X6–48176–60	.GROMMET	1					
72	6X6–48127–01	.SCREW 1	6					
73	6X6–48128–00	.SCREW 2	4					
74	6X6–81146–01	.SCREW 2	4					
75	6X6–81145–01	.SCREW 1	2					
76	6X6–82563–50	.TRIM & TILT SWITCH ASSY	1					

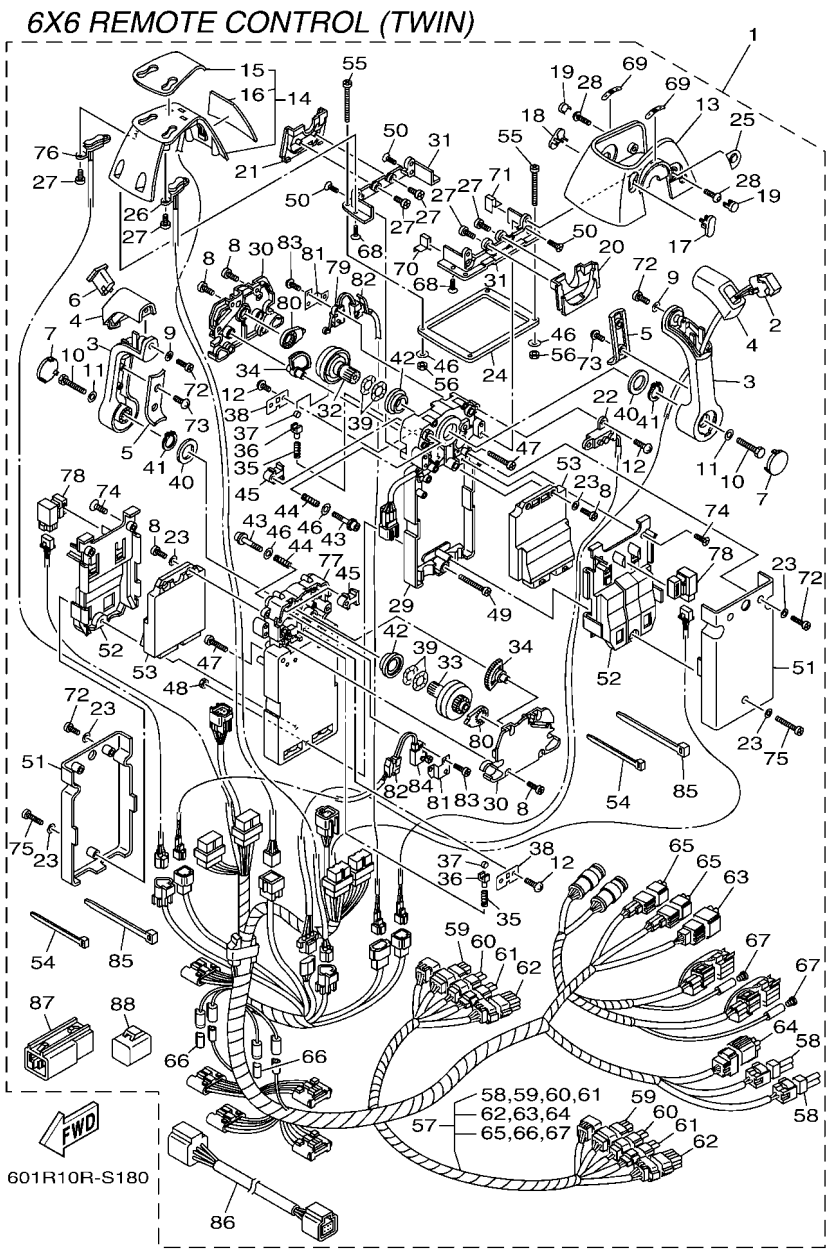

FIG. 18 DBW REMOTE CONTROL 2 (TWIN)

REF. NO.	PART NO.	DESCRIPTION	601R					REMARKS
77	6X6–481A0–22	.REMO-CON. CASE ASSY	1					
78	704–81950–10	.RELAY ASSY	2					
79	6X6–82540–00	.NEUTRAL SWITCH ASSY	1					
80	6X6–48241–00	.ARM, DRIVE	2					
81	6X6–48245–01	.PLATE, LOCK	2					
82	6X6–82545–00	.GROMMET	2					
83	6X6–8252V–00	.SCREW, SPECIAL	4					
84	6X6–82540–10	.NEUTRAL SWITCH ASSY	1					
85	703–82591–10	.BAND	8					
86	6Y8–82553–50	.10FT MAIN BUS	1					FOR 6X6-48207-61/71
87	6Y8–81920–11	.IN-LINE HUB ASSY	1					FOR 6X6-48207-61/71
88	6Y8–82582–11	.CAP 1 (4PIN)	1					FOR 6X6-48207-61/71

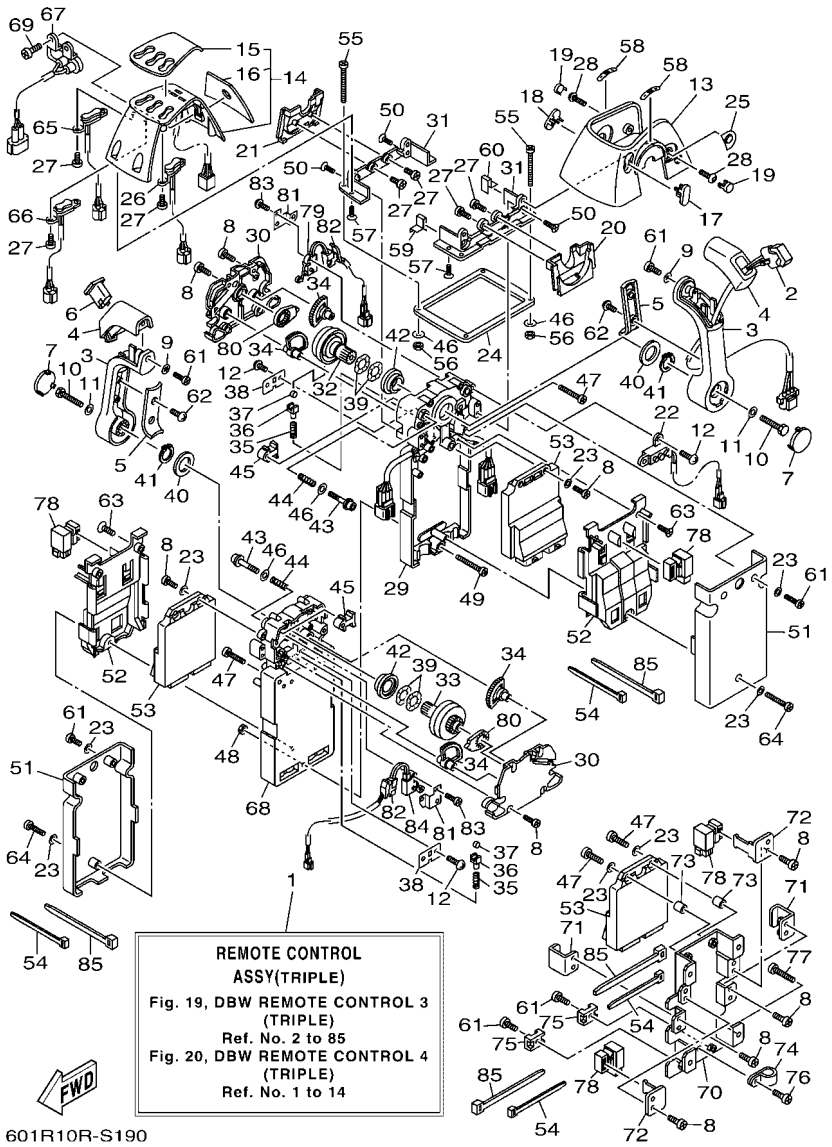

FIG. 19 DBW REMOTE CONTROL 3 (TRIPLE)

REF. NO.	PART NO.	DESCRIPTION	601R					REMARKS
1	6X6–48208–61	REMOTE CONTROL ASSY (TRIPLE)	1					NOT FOR SALE
	6X6–48208–71	REMOTE CONTROL ASSY (TRIPLE)	1					NOT FOR SALE
2	6X6–82563–01	TRIM & TILT SWITCH ASSY	1					
3	6X6–48221–00	LEVER, CONTROL	2					
4	6X6–48222–00	GRIP, CONTROL LEVER	2					
5	6X6–48224–00	COVER, CONTROL LEVER	2					
6	6X6–48222–10	GRIP, CONTROL LEVER	1					
7	6X6–48224–10	COVER, CONTROL LEVER	2					
8	98580–05014	SCREW, PAN HEAD	20					
9	92990–05300	WASHER, INTERNAL TOOTH	2					
10	6X6–48171–00	BOLT	2					
11	92990–08600	WASHER, PLATE	2					
12	EL8–48127–00	SCREW 1	6					
13	6X6–48119–10	COVER	1					
14	6X6–84301–23	PILOT LIGHT ASSY 1	1					
15	6X6–48215–50	.GRAPHIC	1					
16	6X6–48216–20	.GRAPHIC	1					
17	6X6–48167–10	PLUG	1					
18	6X6–48167–20	PLUG	1					
19	6X6–48167–60	PLUG	2					
20	6X6–48219–10	COVER, LEAD	1					
21	6X6–48219–20	COVER, LEAD	1					
22	6X6–8259E–00	SWITCH ASSY	1					
23	92990–05200	WASHER, PLAIN	12					
24	6X6–48176–10	GROMMET	1					
25	6X6–48225–00	COVER	1					
26	6X6–82563–40	TRIM & TILT SWITCH ASSY	1					

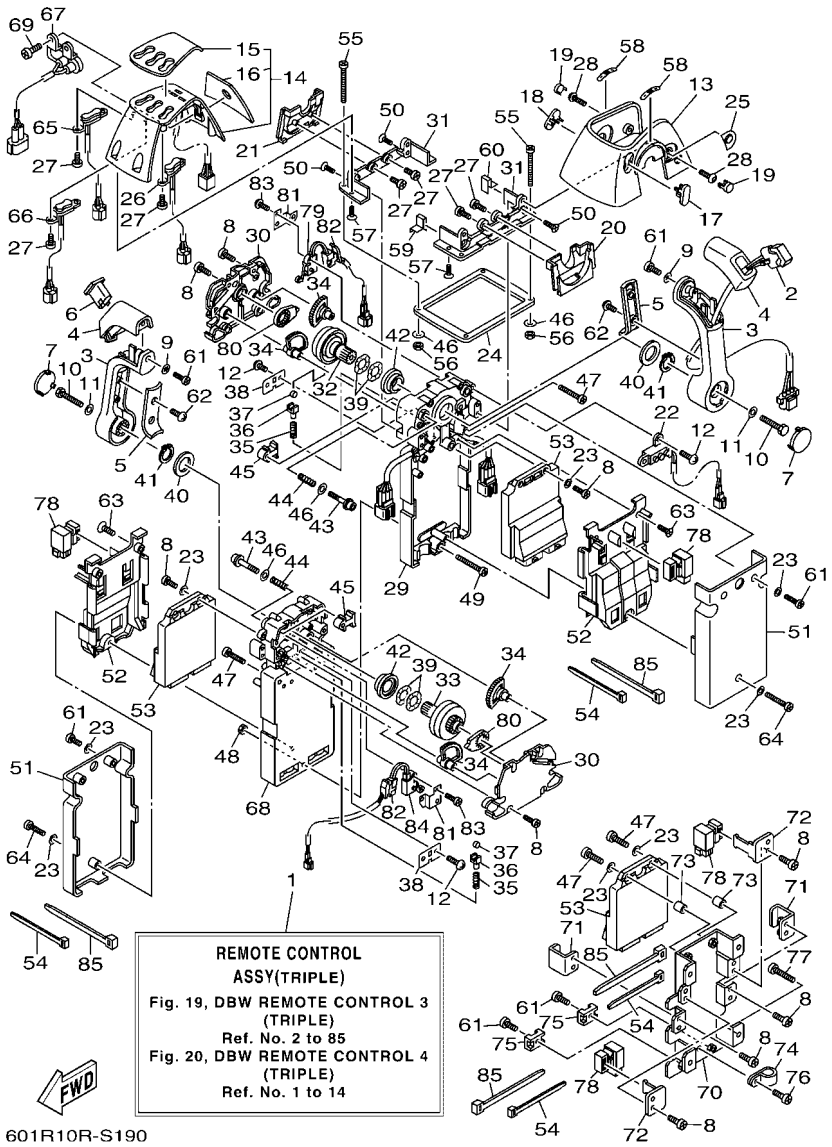

FIG. 19 DBW REMOTE CONTROL 3 (TRIPLE)

REF. NO.	PART NO.	DESCRIPTION	601R					REMARKS
27	98580–04010	SCREW, PAN HEAD	10					
28	6X6–48267–C0	BOLT SET	2					
29	6X6–481A0–12	REMO-CON. CASE ASSY	1					
30	6X6–48212–00	BACK PLATE 1	2					
31	6X6–48144–10	PLATE, STOPPER 2	2					
32	6X6–48242–02	SHAFT, DRIVE	1					
33	6X6–48242–12	SHAFT, DRIVE	1					
34	6X6–48233–01	GEAR 2	4					
35	6X6–48238–00	SPRING, DETENT	2					
36	6X6–48237–00	ADAPTOR	2					
37	6X6–48236–00	ROLLER, DETENT	2					
38	6X6–48189–00	RETAINER	2					
39	703–48198–00	WASHER, WAVE	4					
40	6X6–48193–00	WASHER 3	2					
41	6X6–48118–00	CLIP, SHIFT LEVER	2					
42	6X6–48234–00	BUSHING 1	2					
43	6X6–48267–00	BOLT SET	2					
44	6X6–48158–00	SPRING 1	2					
45	6X6–48264–00	FRICTION, THROTTLE	2					
46	704–48287–00	WASHER	6					
47	98580–05025	SCREW, PAN HEAD	4					
48	704–48156–00	NUT 1	1					
49	704–48283–00	SCREW	1					
50	6X6–81147–00	SCREW 3	4					
51	6X6–48213–00	BACK PLATE 2	2					
52	6X6–48228–01	HOLDER, SWITCH	2					
53	6X6–85590–31	CONTROL UNIT ASSY	3					

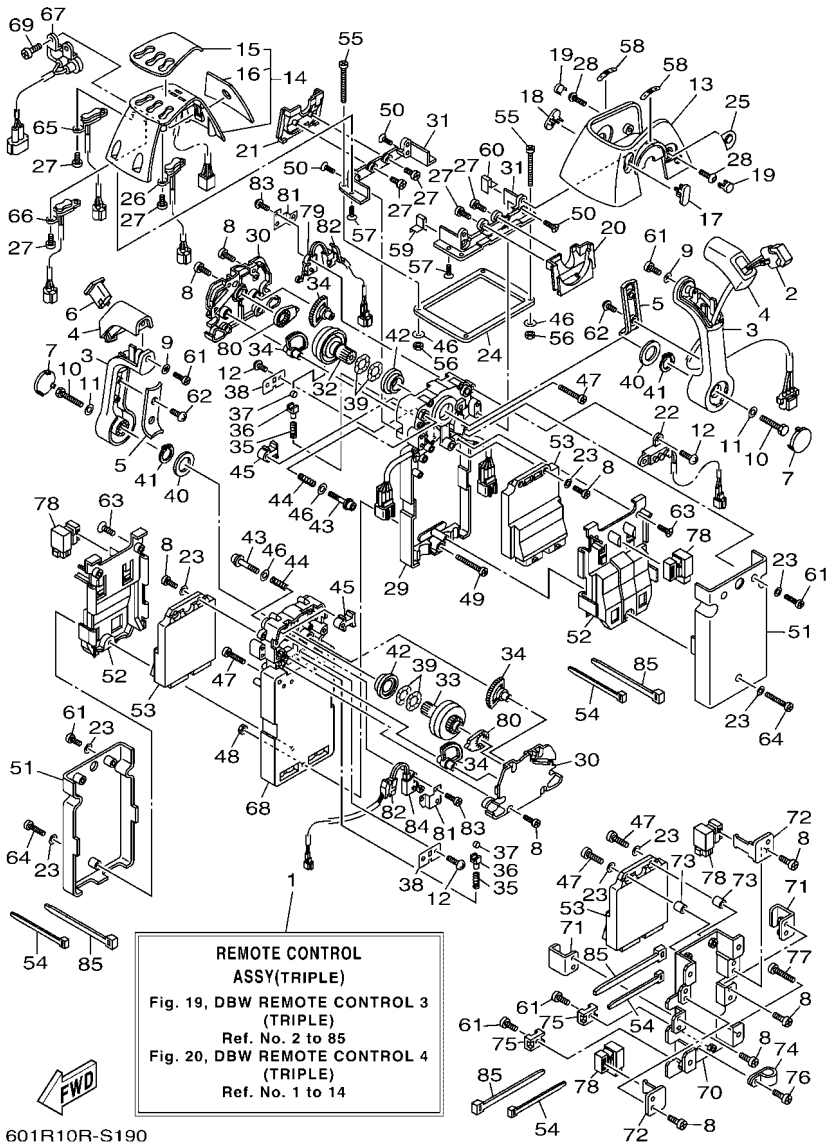

FIG. 19 DBW REMOTE CONTROL 3 (TRIPLE)

REF. NO.	PART NO.	DESCRIPTION	601R					REMARKS
54	703–82591–00	BAND	8					
55	97780–50145	SCREW, TAPPING	4					UR
	98580–05060	SCREW, PAN HEAD	4					UR
56	95380–05600	NUT	4					
57	6X6–48129–01	SCREW 3	4					
58	6X6–44191–10	INDICATOR, SHIFT	2					
59	6X6–48176–50	GROMMET	1					
60	6X6–48176–60	GROMMET	1					
61	6X6–48127–01	SCREW 1	8					
62	6X6–48128–00	SCREW 2	4					
63	6X6–81146–01	SCREW 2	4					
64	6X6–81145–01	SCREW 1	2					
65	6X6–82563–50	TRIM & TILT SWITCH ASSY	1					
66	6X6–82563–60	TRIM & TILT SWITCH ASSY	1					
67	6X6–8259F–10	SWITCH ASSY	1					
68	6X6–481A0–32	REMO-CON. CASE ASSY	1					
69	98780–05010	SCREW, FLAT HEAD	2					
70	6X6–48211–10	HOUSING,1	1					
71	6X6–85557–00	HOLDER	2					
72	6X6–82591–00	BAND	2					
73	6X6–8252S–00	SPACER, 1	2					
74	6X6–82584–00	CLAMP	1					
75	6X6–82581–00	STAY, CORD CLAMP	2					
76	6X7–48127–00	SCREW 1	1					
77	6X0–48128–00	SCREW(M6X30)	4					
78	704–81950–10	RELAY ASSY	4					
79	6X6–82540–00	NEUTRAL SWITCH ASSY	1					

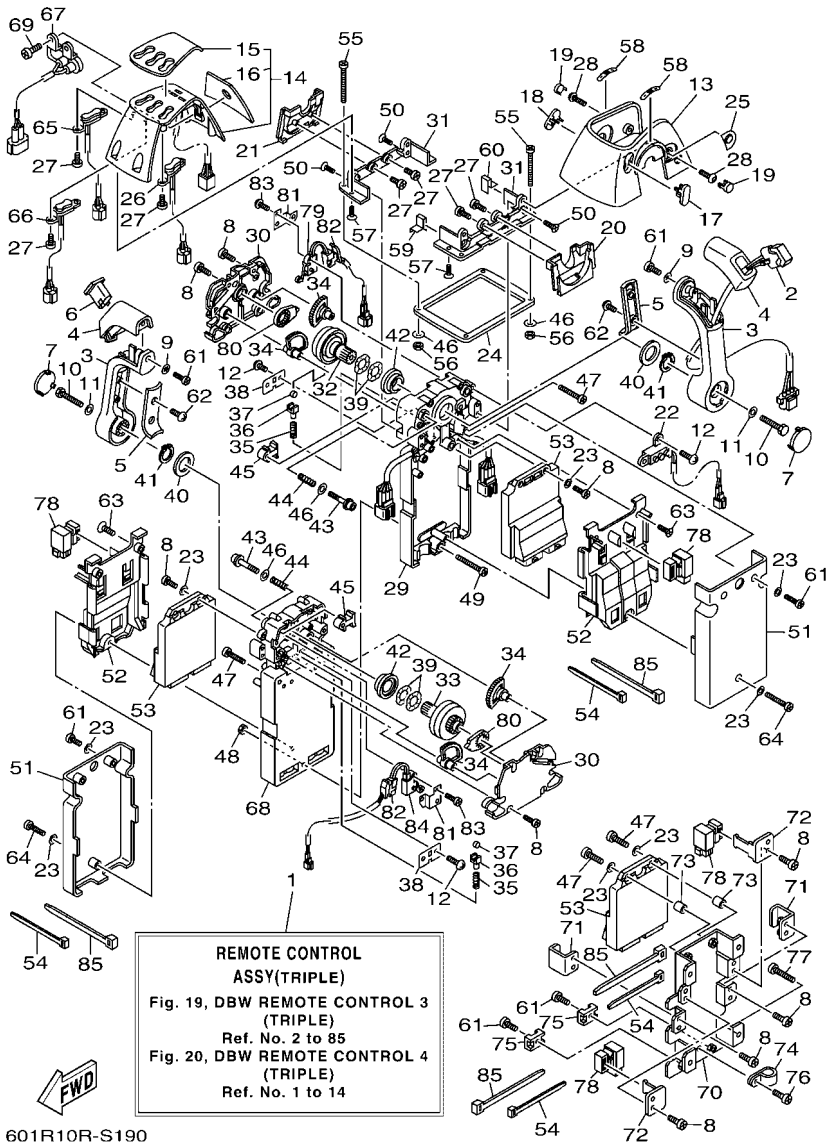

FIG. 19 DBW REMOTE CONTROL 3 (TRIPLE)

REF. NO.	PART NO.	DESCRIPTION	601R					REMARKS
80	6X6–48241–00	ARM, DRIVE	2					
81	6X6–48245–01	PLATE, LOCK	2					
82	6X6–82545–00	GROMMET	2					
83	6X6–8252V–00	SCREW, SPECIAL	4					
84	6X6–82540–10	NEUTRAL SWITCH ASSY	1					
85	703–82591–10	BAND	8					

FIG. 20 DBW REMOTE CONTROL 4 (TRIPLE)

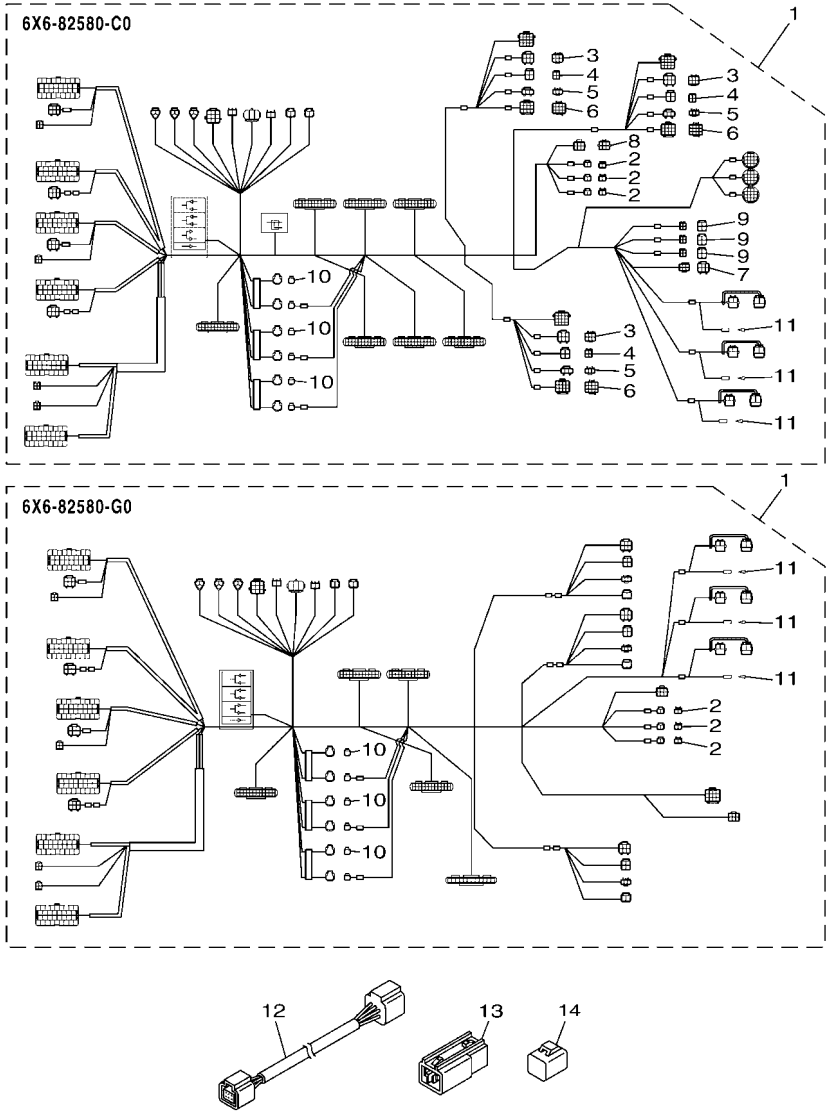

601R10R-S200

REF. NO.	PART NO.	DESCRIPTION	601R					REMARKS
1	6X6–82580–C0	WIRE HARNESS ASSY 2	1					FOR 6X6-48208-61
	6X6–82580–G0	WIRE HARNESS ASSY 2	1					FOR 6X6-48208-71
2	6X6–82585–20	.CAP 2 (2P)	3					
3	6X6–82582–60	.CAP 1 (6P)	3					FOR 6X6-82580-C0
4	6X6–82582–40	.CAP 1 (4P)	3					FOR 6X6-82580-C0
5	6X6–82582–A0	.CAP 1 (3P)	3					FOR 6X6-82580-C0
6	6X6–82582–C0	.CAP 1 (12P)	3					FOR 6X6-82580-C0
7	6X6–82585–70	.CAP 2 (6P)	1					FOR 6X6-82580-C0
8	6X6–8257Y–70	.CAP 2 (6P)	1					FOR 6X6-82580-C0
9	6Y8–82582–11	.CAP 1 (4PIN)	3					FOR 6X6-82580-C0
10	6X6–82585–00	.CAP 2	3					
11	703–82119–00	.COVER, LEAD WIRE	3					
12	6Y8–82553–50	10FT MAIN BUS	1					FOR 6X6-48208-61
13	6Y8–81920–11	IN-LINE HUB ASSY	1					FOR 6X6-48208-61
14	6Y8–82582–11	CAP 1 (4PIN)	1					FOR 6X6-48208-61

6X6 REMOTE CONTROL (QUAD)

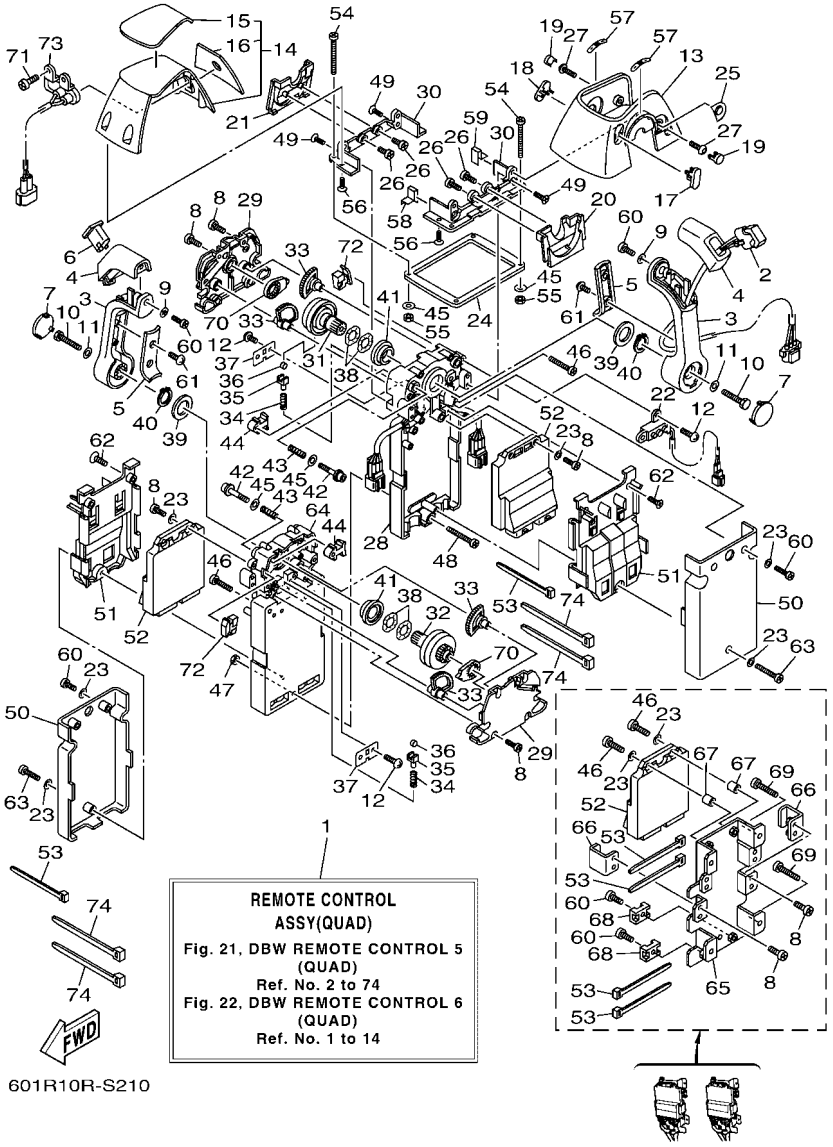

FIG. 21 DBW REMOTE CONTROL 5 (QUAD)

REF. NO.	PART NO.	DESCRIPTION	601R					REMARKS
1	6X6–48209–21	REMOTE CONTROL ASSY (QUAD)	1					NOT FOR SALE
	6X6–48209–31	REMOTE CONTROL ASSY (QUAD)	1					NOT FOR SALE
2	6X6–82563–01	TRIM & TILT SWITCH ASSY	1					
3	6X6–48221–00	LEVER, CONTROL	2					
4	6X6–48222–00	GRIP, CONTROL LEVER	2					
5	6X6–48224–00	COVER, CONTROL LEVER	2					
6	6X6–48222–10	GRIP, CONTROL LEVER	1					
7	6X6–48224–10	COVER, CONTROL LEVER	2					
8	98580–05014	SCREW, PAN HEAD	20					
9	92990–05300	WASHER, INTERNAL TOOTH	2					
10	6X6–48171–00	BOLT	2					
11	92990–08600	WASHER, PLATE	2					
12	EL8–48127–00	SCREW 1	6					
13	6X6–48119–10	COVER	1					
14	6X6–84301–40	PILOT LIGHT ASSY 1	1					
15	6X6–48215–70	.GRAPHIC	1					
16	6X6–48216–20	.GRAPHIC	1					
17	6X6–48167–10	PLUG	1					
18	6X6–48167–20	PLUG	1					
19	6X6–48167–60	PLUG	2					
20	6X6–48219–10	COVER, LEAD	1					
21	6X6–48219–20	COVER, LEAD	1					
22	6X6–8259E–00	SWITCH ASSY	1					
23	92990–05200	WASHER, PLAIN	14					
24	6X6–48176–10	GROMMET	1					
25	6X6–48225–00	COVER	1					
26	98580–04010	SCREW, PAN HEAD	4					

6X6 REMOTE CONTROL (QUAD)

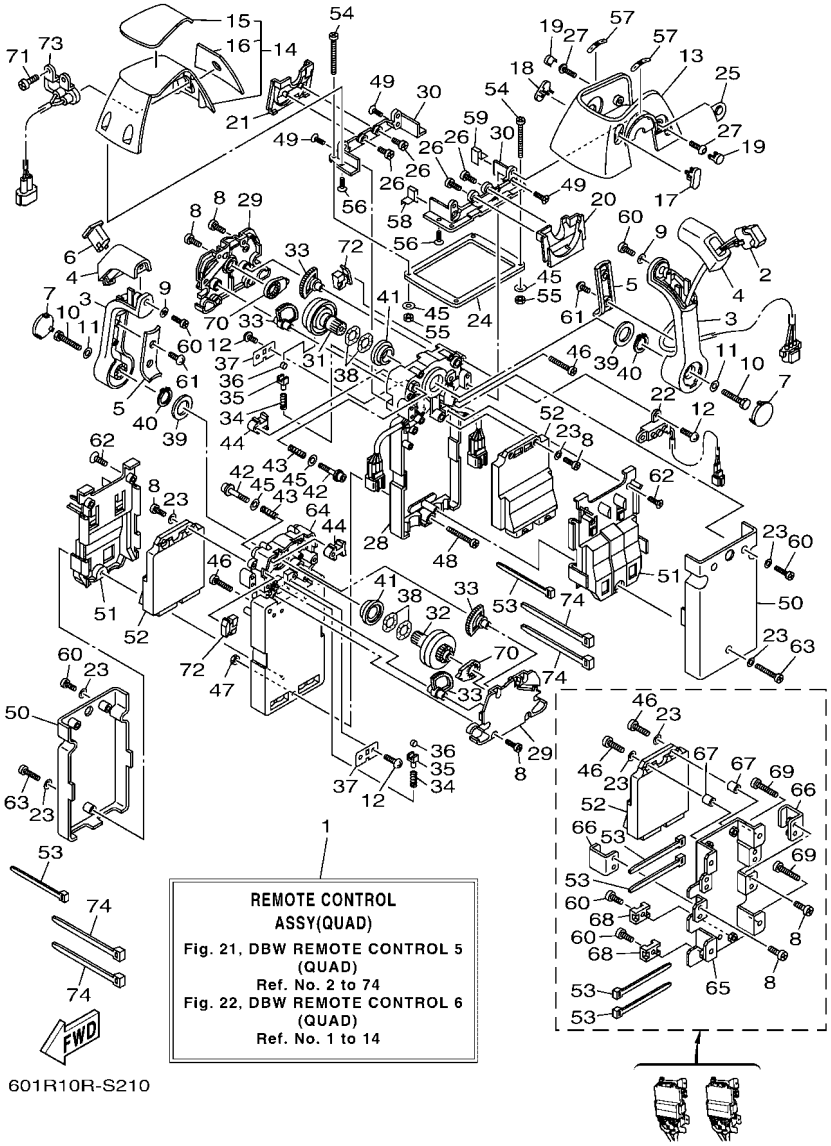

FIG. 21 DBW REMOTE CONTROL 5 (QUAD)

REF. NO.	PART NO.	DESCRIPTION	601R					REMARKS
27	6X6–48267–C0	BOLT SET	2					
28	6X6–481A0–12	REMO-CON. CASE ASSY	1					
29	6X6–48212–00	BACK PLATE 1	2					
30	6X6–48144–10	PLATE, STOPPER 2	2					
31	6X6–48242–02	SHAFT, DRIVE	1					
32	6X6–48242–12	SHAFT, DRIVE	1					
33	6X6–48233–01	GEAR 2	4					
34	6X6–48238–00	SPRING, DETENT	2					
35	6X6–48237–00	ADAPTOR	2					
36	6X6–48236–00	ROLLER, DETENT	2					
37	6X6–48189–00	RETAINER	2					
38	703–48198–00	WASHER, WAVE	4					
39	6X6–48193–00	WASHER 3	2					
40	6X6–48118–00	CLIP, SHIFT LEVER	2					
41	6X6–48234–00	BUSHING 1	2					
42	6X6–48267–00	BOLT SET	2					
43	6X6–48158–00	SPRING 1	2					
44	6X6–48264–00	FRICTION, THROTTLE	2					
45	704–48287–00	WASHER	6					
46	98580–05025	SCREW, PAN HEAD	6					
47	704–48156–00	NUT 1	1					
48	704–48283–00	SCREW	1					
49	6X6–81147–00	SCREW 3	4					
50	6X6–48213–00	BACK PLATE 2	2					
51	6X6–48228–01	HOLDER, SWITCH	2					
52	6X6–85590–31	CONTROL UNIT ASSY	4					
53	703–82591–00	BAND	12					

6X6 REMOTE CONTROL (QUAD)

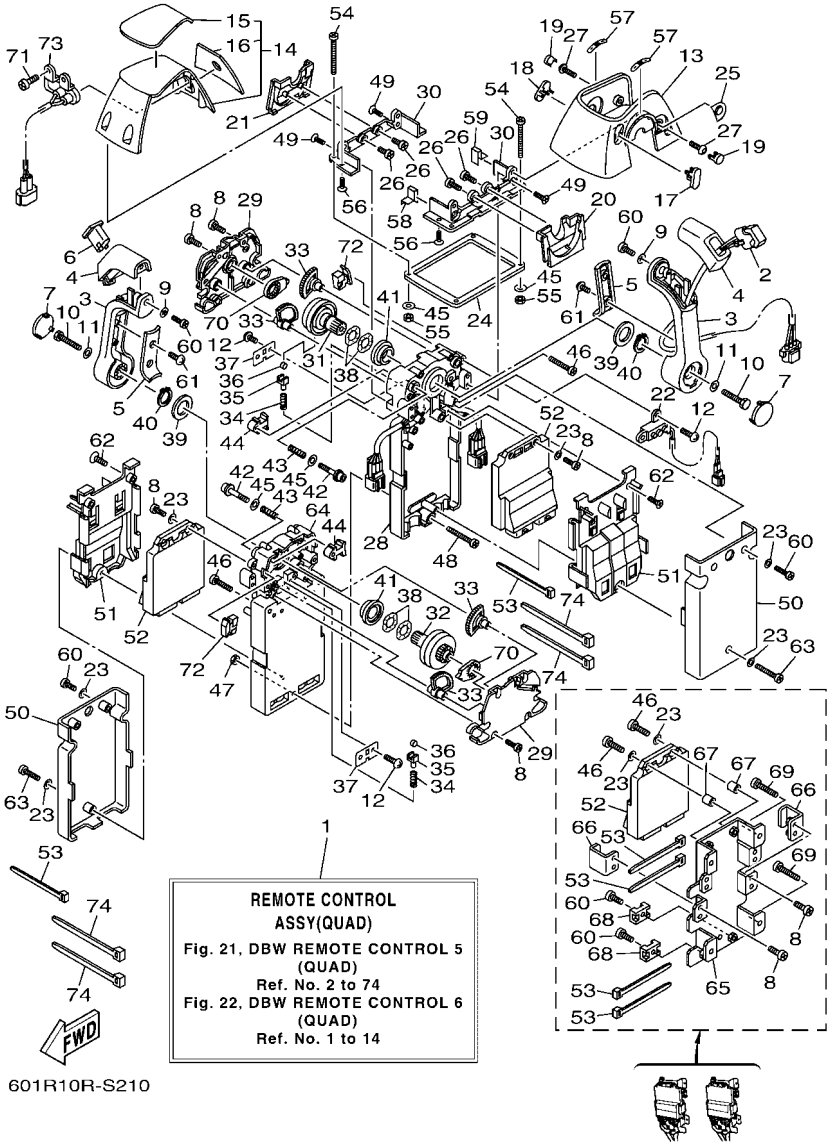

FIG. 21 DBW REMOTE CONTROL 5 (QUAD)

REF. NO.	PART NO.	DESCRIPTION	601R					REMARKS
54	97780–50145	SCREW, TAPPING	4					UR
	98580–05060	SCREW, PAN HEAD	4					UR
55	95380–05600	NUT	4					
56	6X6–48129–01	SCREW 3	4					
57	6X6–44191–10	INDICATOR, SHIFT	2					
58	6X6–48176–50	GROMMET	1					
59	6X6–48176–60	GROMMET	1					
60	6X6–48127–01	SCREW 1	10					
61	6X6–48128–00	SCREW 2	4					
62	6X6–81146–01	SCREW 2	4					
63	6X6–81145–01	SCREW 1	2					
64	6X6–481A0–32	REMO-CON. CASE ASSY	1					
65	6X6–48211–10	HOUSING,1	2					
66	6X6–85557–00	HOLDER	4					
67	6X6–8252S–00	SPACER, 1	4					
68	6X6–82581–00	STAY, CORD CLAMP	4					
69	6X0–48128–00	SCREW(M6X30)	8					
70	6X6–48241–00	ARM, DRIVE	2					
71	98780–05010	SCREW, FLAT HEAD	2					
72	6X6–82545–00	GROMMET	2					
73	6X6–8259F–10	SWITCH ASSY	1					
74	703–82591–10	BAND	8					

6X6 REMOTE CONTROL (QUAD)

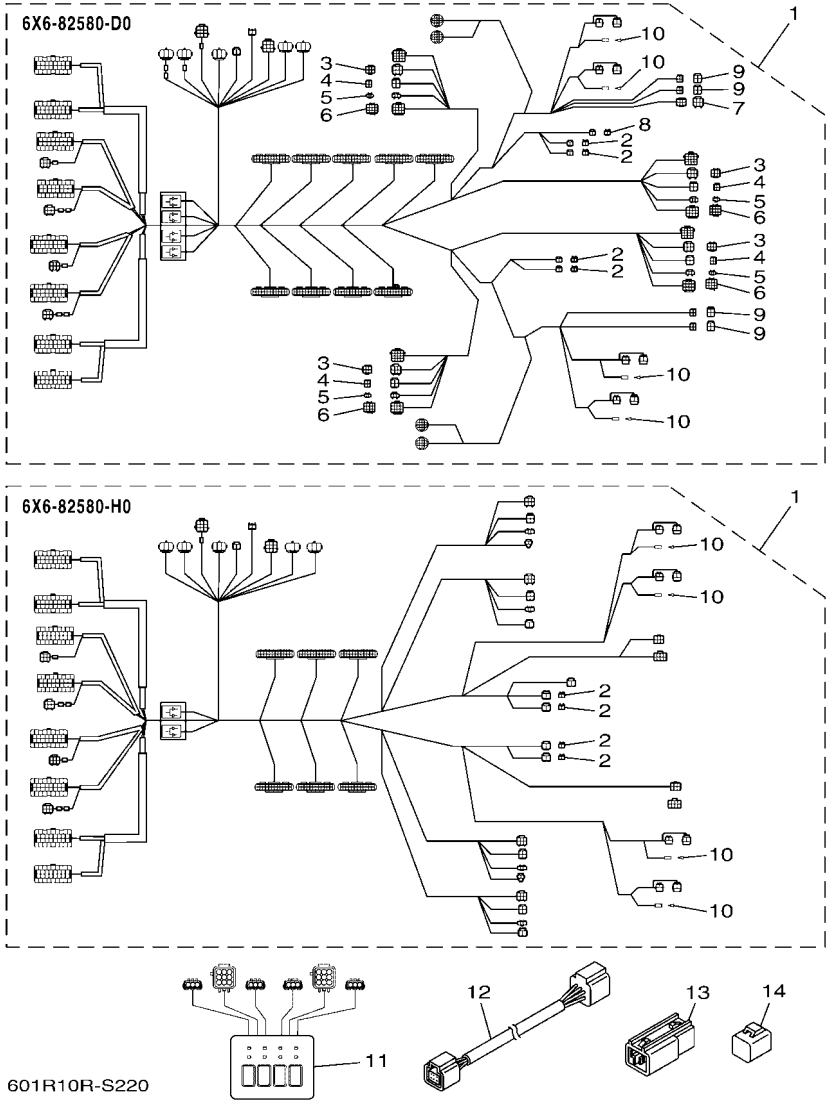

FIG. 22 DBW REMOTE CONTROL 6 (QUAD)

REF. NO.	PART NO.	DESCRIPTION	601R					REMARKS
1	6X6–82580–D0	WIRE HARNESS ASSY 2	1					FOR 6X6-48209-21
	6X6–82580–H0	WIRE HARNESS ASSY 2	1					FOR 6X6-48209-31
2	6X6–82585–20	.CAP 2 (2P)	4					
3	6X6–82582–60	.CAP 1 (6P)	4					FOR 6X6-82580-D0
4	6X6–82582–40	.CAP 1 (4P)	4					FOR 6X6-82580-D0
5	6X6–82582–A0	.CAP 1 (3P)	4					FOR 6X6-82580-D0
6	6X6–82582–C0	.CAP 1 (12P)	4					FOR 6X6-82580-D0
7	6X6–82585–70	.CAP 2 (6P)	1					FOR 6X6-82580-D0
8	6X6–8257Y–00	.CAP	1					FOR 6X6-82580-D0
9	6Y8–82582–11	.CAP 1 (4PIN)	4					FOR 6X6-82580-D0
10	703–82119–00	.COVER, LEAD WIRE	4					
11	6X6–82570–N1	PANEL SWITCH ASSY	1					
12	6Y8–82553–50	10FT MAIN BUS	1					FOR 6X6-48209-21
13	6Y8–81920–11	IN-LINE HUB ASSY	1					FOR 6X6-48209-21
14	6Y8–82582–11	CAP 1 (4PIN)	1					FOR 6X6-48209-21

REMOTE CONTROL SPECIFICATION LIST (6X7 TYPE)

TYPE : 6X7	MECHANICAL SPECIFICATION						
TYPE : 6X7	LIST UP SEC.	VARIATION CODE	SINGLE STATION	DUAL STATION		HANDLE POSITION	
PART NO.	FIG.NO.-REF.NO.			MAIN	SUB	RIGHT	LEFT
6X7-48206-21	23-1	A	○	*	*	○	*
6X7-48206-31		C	○	○	*	○	*
6X7-48206-41		G	*	*	○	○	*

6X7 REMOTE CONTROL

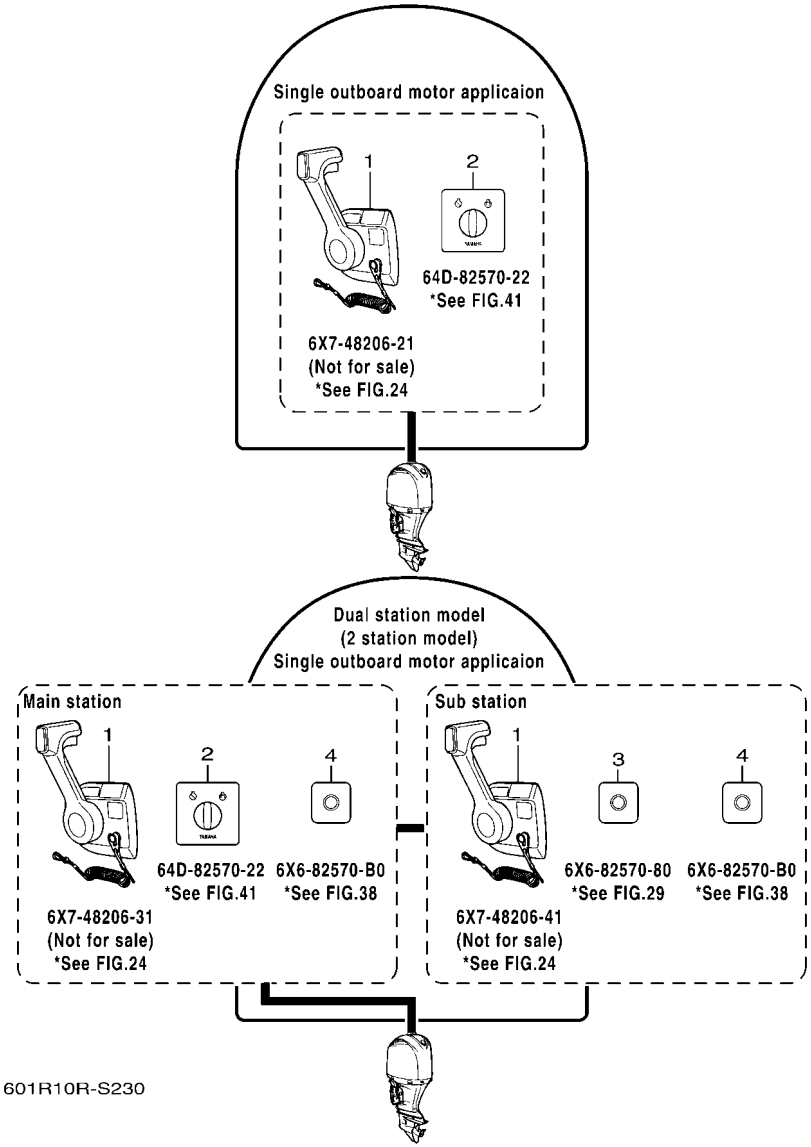

FIG. 23 LAYOUT CHART 5 (6X7)

REF. NO.	PART NO.	DESCRIPTION	601R					REMARKS
1	6X7–48206–21	REMOTE CONTROL ASSY	1					NOT FOR SALE
	6X7–48206–31	REMOTE CONTROL ASSY	1					NOT FOR SALE
	6X7–48206–41	REMOTE CONTROL ASSY	1					NOT FOR SALE
2	64D–82570–22	PANEL SWITCH ASSY	1					1 & 2 STATION MAIN
3	6X6–82570–80	PANEL SWITCH ASSY	1					2 STATION SUB
4	6X6–82570–B0	PANEL SWITCH ASSY	1					2 STATION MAIN & SUB

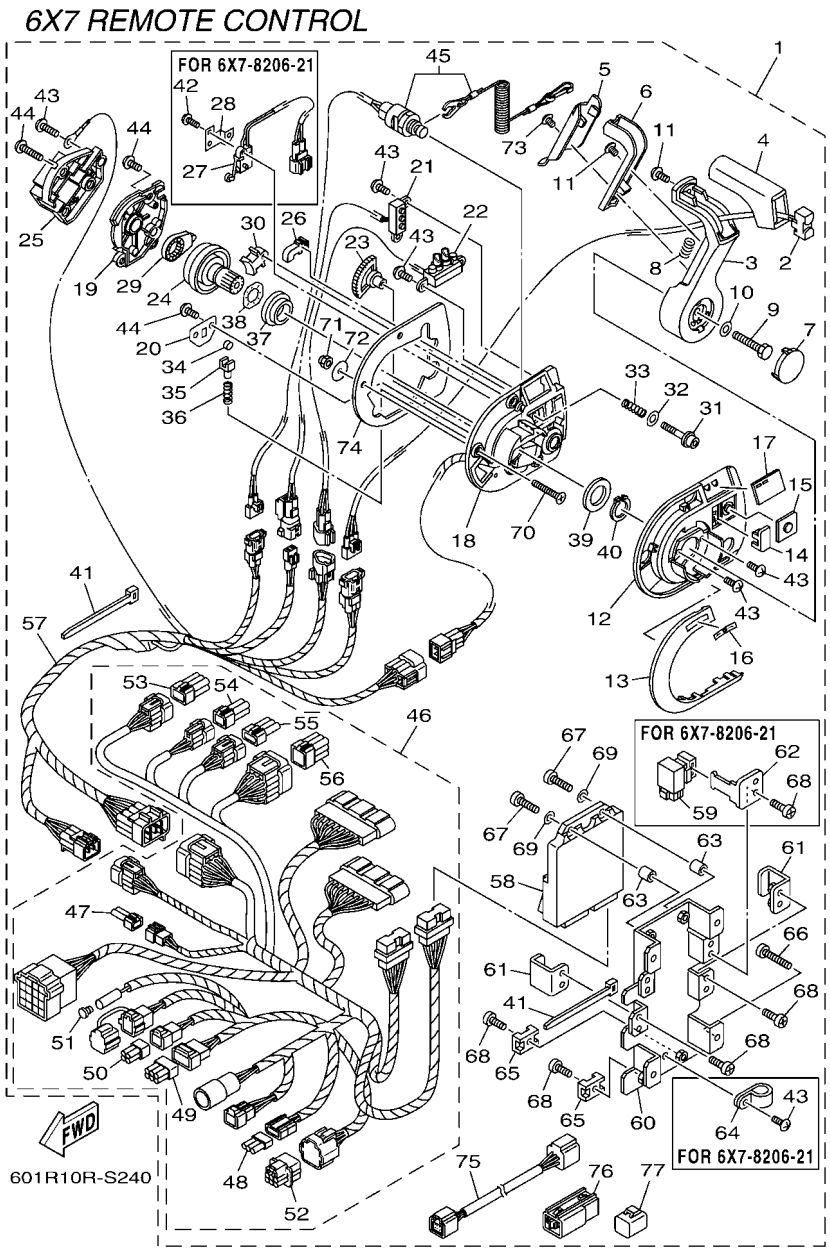

FIG. 24 DBW REMOTE CONTROL 7 (6X7)

REF. NO.	PART NO.	DESCRIPTION	601R					REMARKS
1	6X7–48206–21	REMOTE CONTROL ASSY	1					NOT FOR SALE
	6X7–48206–31	REMOTE CONTROL ASSY	1					NOT FOR SALE
	6X7–48206–41	REMOTE CONTROL ASSY	1					NOT FOR SALE
2	6X7–82563–00	.TRIM & TILT SWITCH ASSY	1					
3	6X7–48221–00	.LEVER, CONTROL	1					
4	6X7–48222–00	.GRIP, CONTROL LEVER	1					
5	6X7–48224–00	.COVER, CONTROL LEVER	1					
6	6X7–48223–00	.LOCK, NEUTRAL	1					
7	6X7–48224–10	.COVER, CONTROL LEVER	1					
8	703–48227–00	.SPRING, NEUTRAL LOCK	1					
9	6X6–48171–00	.BOLT	1					
10	92990–08600	.WASHER, PLATE	1					
11	6X6–48128–00	.SCREW 2	2					
12	6X7–48119–00	.COVER	1					
13	6X7–48167–10	.PLUG	1					
14	6X7–48167–00	.PLUG	1					
15	6X7–48225–00	.COVER	1					
16	6X7–44191–10	.INDICATOR, SHIFT	1					
17	6X7–48215–10	.GRAPHIC	1					
18	6X7–481A0–01	.REMO-CON. CASE ASSY	1					
19	6X7–48212–00	.BACK PLATE 1	1					
20	6X7–48189–00	.RETAINER	1					
21	6X7–8259E–00	.SWITCH ASSY	1					
22	6X7–84301–00	.PILOT LIGHT ASSY 1	1					
23	6X7–48233–00	.GEAR 2	1					
24	6X7–48242–00	.SHAFT, DRIVE	1					
25	6X7–48228–00	.HOLDER, SWITCH	1					

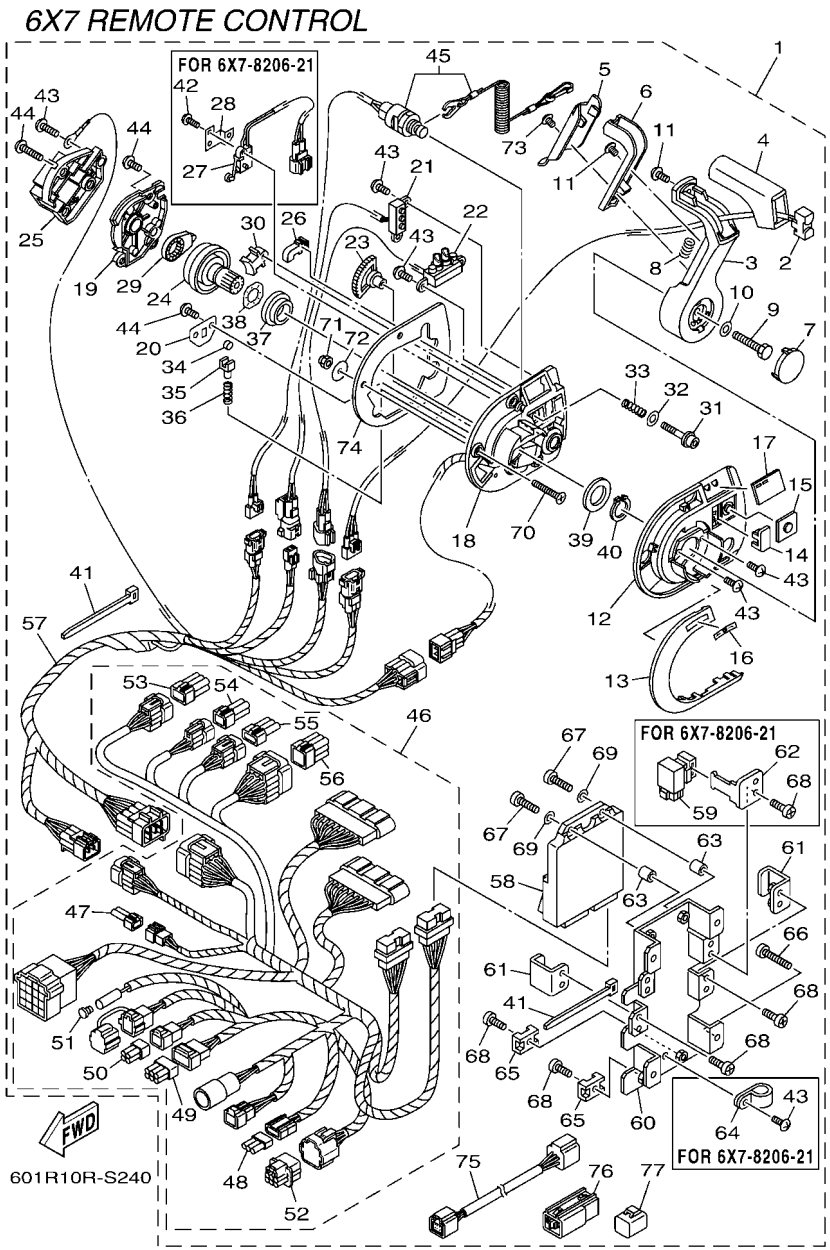

FIG. 24 DBW REMOTE CONTROL 7 (6X7)

REF. NO.	PART NO.	DESCRIPTION	601R					REMARKS
26	6X7–82545–00	.GROMMET	1					
27	6X6–82540–00	.NEUTRAL SWITCH ASSY	1					FOR 6X7-48206-21
28	6X6–48245–01	.PLATE, LOCK	1					FOR 6X7-48206-21
29	6X6–48241–00	.ARM, DRIVE	1					
30	6X6–48264–00	.FRICTION, THROTTLE	1					
31	6X6–48267–00	.BOLT SET	1					
32	704–48287–00	.WASHER	1					
33	6X6–48158–00	.SPRING 1	1					
34	6X6–48236–00	.ROLLER, DETENT	1					
35	6X6–48237–00	.ADAPTOR	1					
36	6X6–48238–00	.SPRING, DETENT	1					
37	6X6–48234–00	.BUSHING 1	1					
38	703–48198–00	.WASHER, WAVE	1					
39	6X6–48193–00	.WASHER 3	1					
40	6X6–48118–00	.CLIP, SHIFT LEVER	1					
41	703–82591–00	.BAND	4					
42	6X6–8252V–00	.SCREW, SPECIAL	2					FOR 6X7-48206-21
43	6X7–48127–00	.SCREW 1	8					FOR 6X7-48206-21
	6X7–48127–00	.SCREW 1	7					FOR 6X7-48206-31/41
44	EL8–48127–00	.SCREW 1	8					
45	6X7–82575–01	.ENGINE STOP SWITCH ASSY	1					
46	6X7–82590–50	.WIRE HARNESS ASSY	1					FOR 6X7-48206-21
	6X7–82590–70	.WIRE HARNESS ASSY	1					FOR 6X7-48206-31
	6X7–82590–80	.WIRE HARNESS ASSY	1					FOR 6X7-48206-41
47	6X6–82585–20	..CAP 2 (2P)	1					
48	6X6–82582–A0	..CAP 1 (3P)	1					FOR 6X7-48206-21/31
49	6X6–82585–60	..CAP 2 (6P)	1					FOR 6X7-48206-21/31

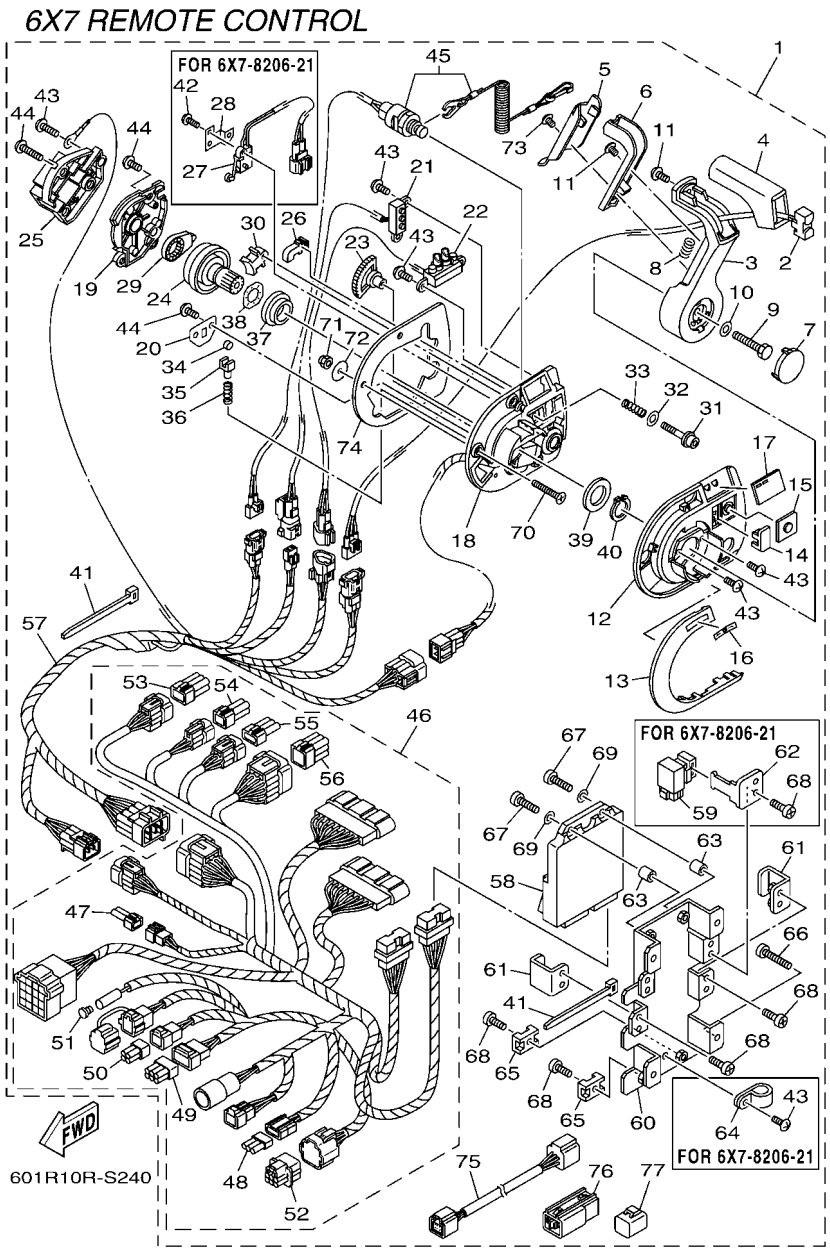

FIG. 24 DBW REMOTE CONTROL 7 (6X7)

REF. NO.	PART NO.	DESCRIPTION	601R					REMARKS
50	6Y8–82582–11	..CAP 1 (4PIN)	1					FOR 6X7-48206-21/31
51	703–82119–00	..COVER, LEAD WIRE	1					
52	6X6–8257Y–70	..CAP 2 (6P)	1					FOR 6X7-48206-31
53	6X6–82582–60	..CAP 1 (6P)	1					FOR 6X7-48206-31
54	6X6–82582–40	..CAP 1 (4P)	1					FOR 6X7-48206-31
55	6X6–82582–A0	..CAP 1 (3P)	1					FOR 6X7-48206-31
56	6X6–82582–C0	..CAP 1 (12P)	1					FOR 6X7-48206-31
57	6X7–82590–20	.WIRE HARNESS ASSY	1					FOR 6X7-48206-21
	6X7–82590–60	.WIRE HARNESS ASSY	1					FOR 6X7-48206-31/41
58	6X6–85590–31	.CONTROL UNIT ASSY	1					
59	704–81950–10	.RELAY ASSY	1					FOR 6X7-48206-21
60	6X6–48211–10	.HOUSING,1	1					
61	6X6–85557–00	.HOLDER	2					
62	6X6–82591–00	.BAND	1					FOR 6X7-48206-21
63	6X6–8252S–00	.SPACER, 1	2					
64	6X6–82584–00	.CLAMP	1					FOR 6X7-48206-21
65	6X6–82581–00	.STAY, CORD CLAMP	2					
66	6X0–48128–00	.SCREW(M6X30)	4					
67	98580–05025	.SCREW, PAN HEAD	2					
68	98580–05014	.SCREW, PAN HEAD	8					FOR 6X7-48206-21
	98580–05014	.SCREW, PAN HEAD	6					FOR 6X7-48206-31/41
69	92990–05200	.WASHER, PLAIN	2					
70	98780–06035	.SCREW, FLAT HEAD	3					UR
	97780–06230	.SCREW, TAPPING	3					UR
71	6X0–48156–00	.NUT 1	3					
72	701–48287–00	.WASHER	3					
73	6X7–48128–00	.SCREW 2	1					

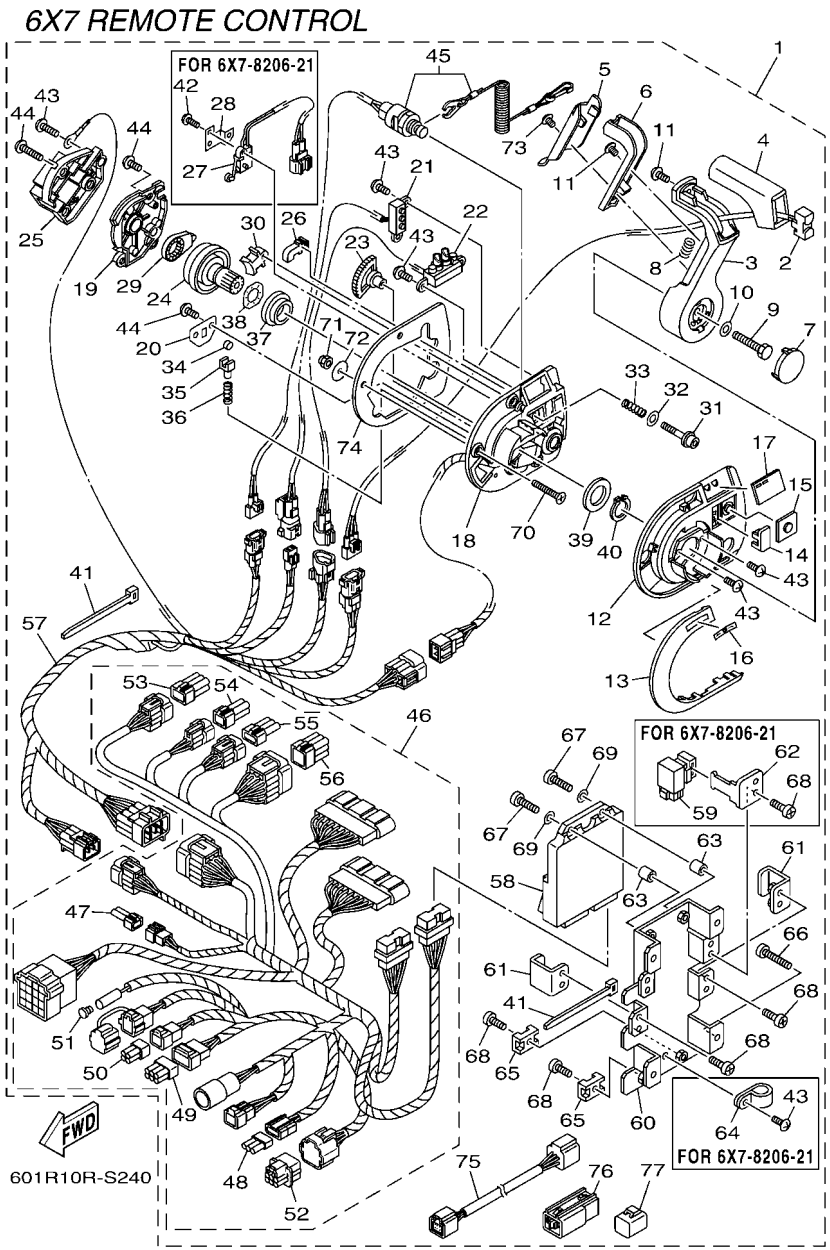

FIG. 24 DBW REMOTE CONTROL 7 (6X7)

REF. NO.	PART NO.	DESCRIPTION	601R					REMARKS
74	6X7–48176–10	.GROMMET	1					
75	6Y8–82553–50	.10FT MAIN BUS	1					FOR 6X7-48206-21/31
76	6Y8–81920–11	.IN-LINE HUB ASSY	1					FOR 6X7-48206-21/31
77	6Y8–82582–11	.CAP 1 (4PIN)	1					FOR 6X7-48206-21/31

FIG. 25 SWITCH & PANEL 1

SINGLE IG SWITCH W/ PANEL

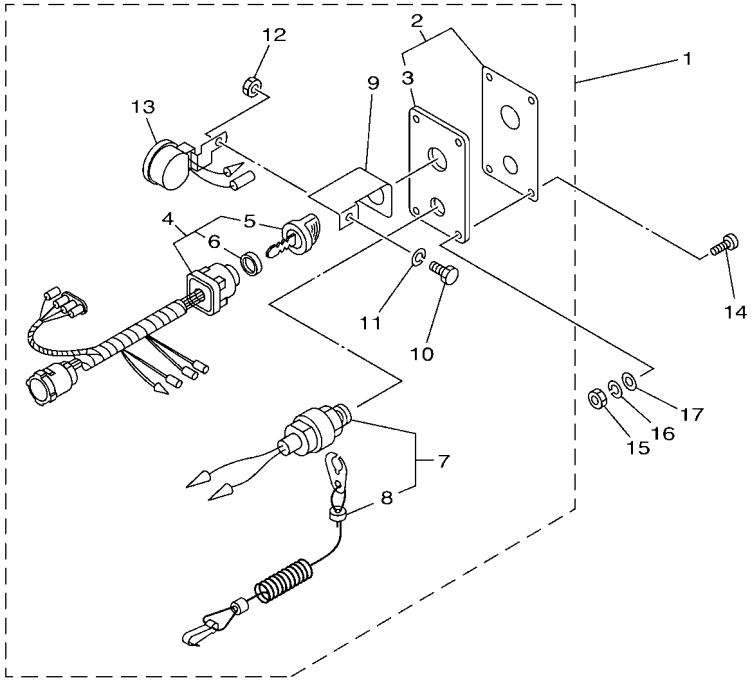

601R10R-Q230

REF. NO.	PART NO.	DESCRIPTION	601R					REMARKS
1	704–82570–12	PANEL SWITCH ASSY	1					WITH CHOKE SW.
2	704–82571–02	.PANEL, SWITCH	1					
3	6R5–82588–01	..PLATE	1					
4	704–82510–0A	.MAIN SWITCH ASSY	1					
5	703–82577–00	..CAP, KEY	1					
6	6K1–82532–00	..CAP	1					
7	688–82575–02	.ENGINE STOP SWITCH ASSY	1					
8	682–82556–00	..LANYARD, STOP SWITCH	1					
9	64D–82581–00	.STAY, CORD CLAMP	1					
10	97303–05012	.BOLT	1					
11	92903–05100	.WASHER, SPRING	1					
12	95303–05700	.NUT	1					
13	688–83383–12	.BUZZER	1					
14	90149–05M05	SCREW	4					
15	95380–05600	NUT	4					
16	92990–05100	WASHER, SPRING	4					
17	92990–05600	WASHER, PLATE	4					

FIG. 26 SWITCH & PANEL 2

SINGLE IG SWITCH W/ PANEL
(FOR PRIME START or DIGITAL NETWORK SYSTEM-6Y8)

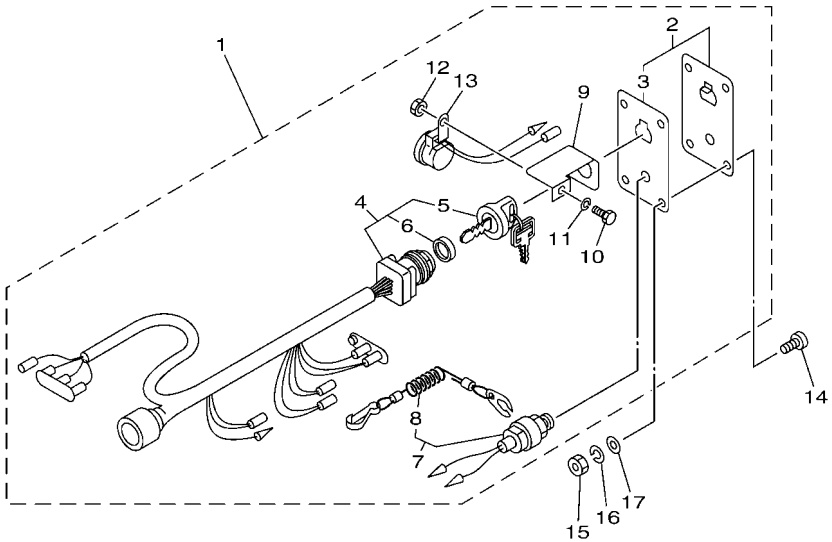

601R10R-Q240

REF. NO.	PART NO.	DESCRIPTION	601R					REMARKS
1	6R5–82570–07	PANEL SWITCH ASSY	1					WITHOUT CHOKE SW.
2	704–82571–02	.PANEL, SWITCH	1					
3	6R5–82588–01	..PLATE	1					
4	6R5–82510–03	.MAIN SWITCH ASSY	1					
5	676–82577–01	..CAP, KEY	1					
6	703–82532–00	..CAP	1					
7	688–82575–02	.ENGINE STOP SWITCH ASSY	1					
8	682–82556–00	..LANYARD, STOP SWITCH	1					
9	64D–82581–00	.STAY, CORD CLAMP	1					
10	97303–05012	.BOLT	1					
11	92903–05100	.WASHER, SPRING	1					
12	95303–05700	.NUT	1					
13	6R5–83383–00	.BUZZER	1					
14	90149–05M05	SCREW	4					
15	95303–05600	NUT	4					
16	92903–05100	WASHER, SPRING	4					
17	92903–05600	WASHER, PLATE	4					

FIG. 27 SWITCH & PANEL 3

SINGLE IG SWITCH W/O PANEL

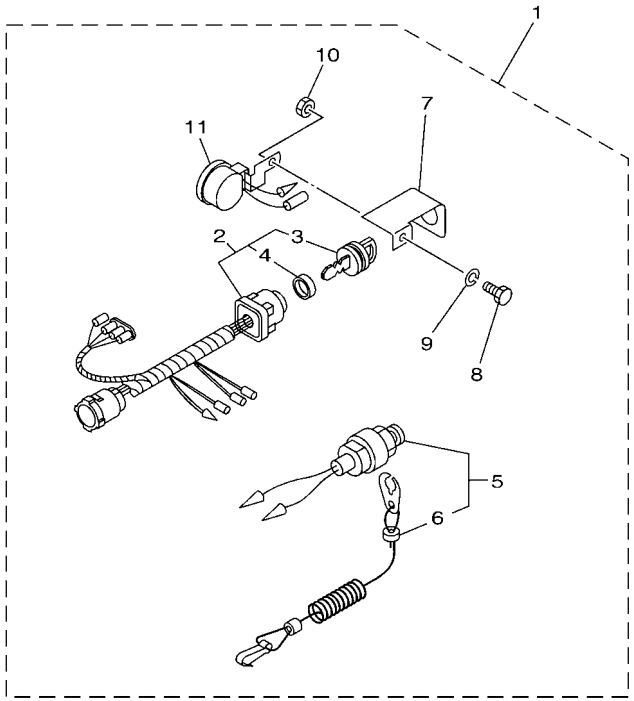

601R10R-Q250

REF. NO.	PART NO.	DESCRIPTION	601R					REMARKS
1	704–8257C–03	PANEL SWITCH COMP. 2	1					WITH CHOKE SW.
2	704–82510–0A	.MAIN SWITCH ASSY	1					
3	703–82577–00	..CAP, KEY	1					
4	6K1–82532–00	..CAP	1					
5	688–82575–02	.ENGINE STOP SWITCH ASSY	1					
6	682–82556–00	..LANYARD, STOP SWITCH	1					
7	64D–82581–00	.STAY, CORD CLAMP	1					
8	97303–05012	.BOLT	1					
9	92903–05100	.WASHER, SPRING	1					
10	95303–05700	.NUT	1					
11	688–83383–12	.BUZZER	1					

DIGITAL NETWORK SYSTEM-6Y9
(SINGLE : 1 & 2 STATION-MAIN)

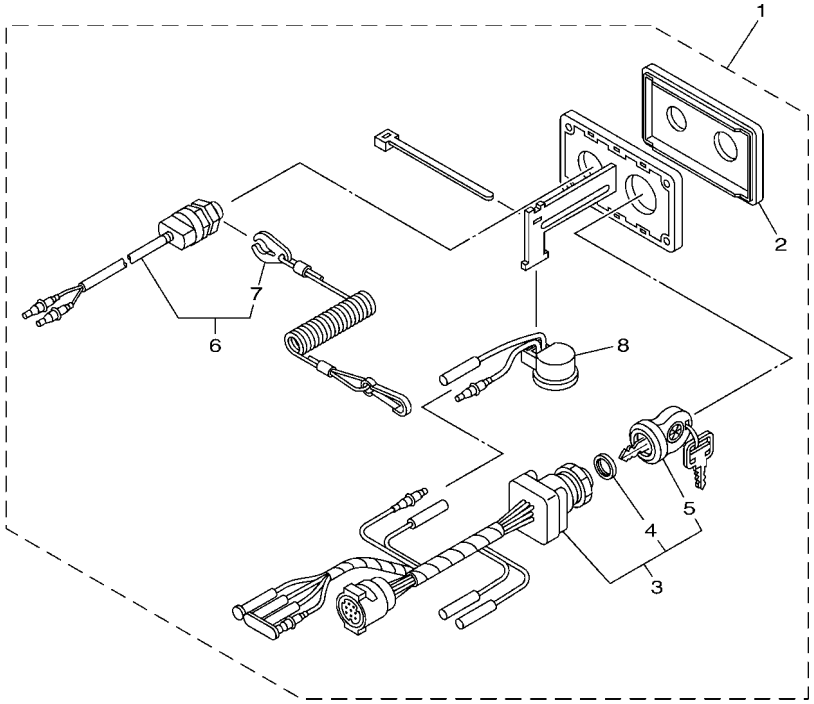

601R10R-S280

FIG. 28 SWITCH & PANEL 4

REF. NO.	PART NO.	DESCRIPTION	601R					REMARKS
1	6X6–82570–33	PANEL SWITCH ASSY	1					1 & 2 STATION MAIN
2	6X6–82571–00	.PANEL, SWITCH	1					
3	6X6–82510–01	.MAIN SWITCH ASSY	1					
4	703–82532–00	..CAP	1					
5	6X6–82511–09–A1	..KEY, MAIN SWITCH	1					UR
	6X6–82511–09–A2	..KEY, MAIN SWITCH	1					UR
	6X6–82511–09–A3	..KEY, MAIN SWITCH	1					UR
	6X6–82511–09–A4	..KEY, MAIN SWITCH	1					UR
	6X6–82511–09–A5	..KEY, MAIN SWITCH	1					UR
	6X6–82511–09–A6	..KEY, MAIN SWITCH	1					UR
	6X6–82511–09–A7	..KEY, MAIN SWITCH	1					UR
	6X6–82511–09–A8	..KEY, MAIN SWITCH	1					UR
	6X6–82511–09–A9	..KEY, MAIN SWITCH	1					UR
6	688–82575–12	.ENGINE STOP SWITCH ASSY	1					
7	682–82556–00	..LANYARD, STOP SWITCH	1					
8	703–83383–A0	.BUZZER	1					

DIGITAL NETWORK SYSTEM-6Y9
(SINGLE : 2 STATION-SUB)

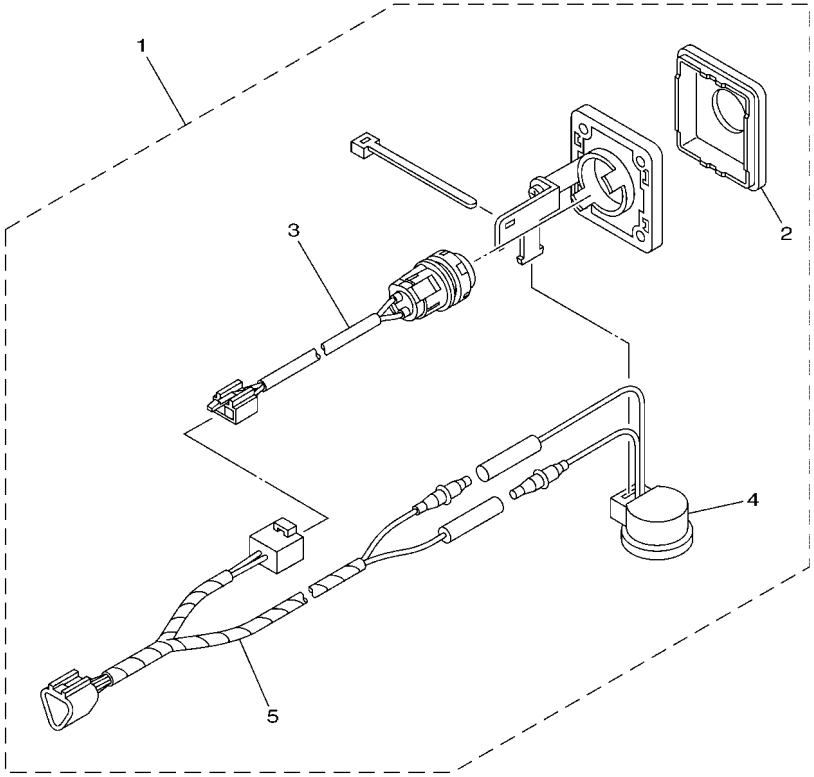

601R10R-K300

FIG. 29 SWITCH & PANEL 5

REF. NO.	PART NO.	DESCRIPTION	601R					REMARKS
1	6X6–82570–80	PANEL SWITCH ASSY	1					2 STATION SUB
2	6X6–82571–40	.PANEL, SWITCH	1					
3	6X6–8259E–20	.SWITCH ASSY	1					
4	703–83383–A0	.BUZZER	1					
5	6X6–82716–20	.CORD SWITCH	1					

FIG. 30 SWITCH & PANEL 6

TWIN IG SWITCH

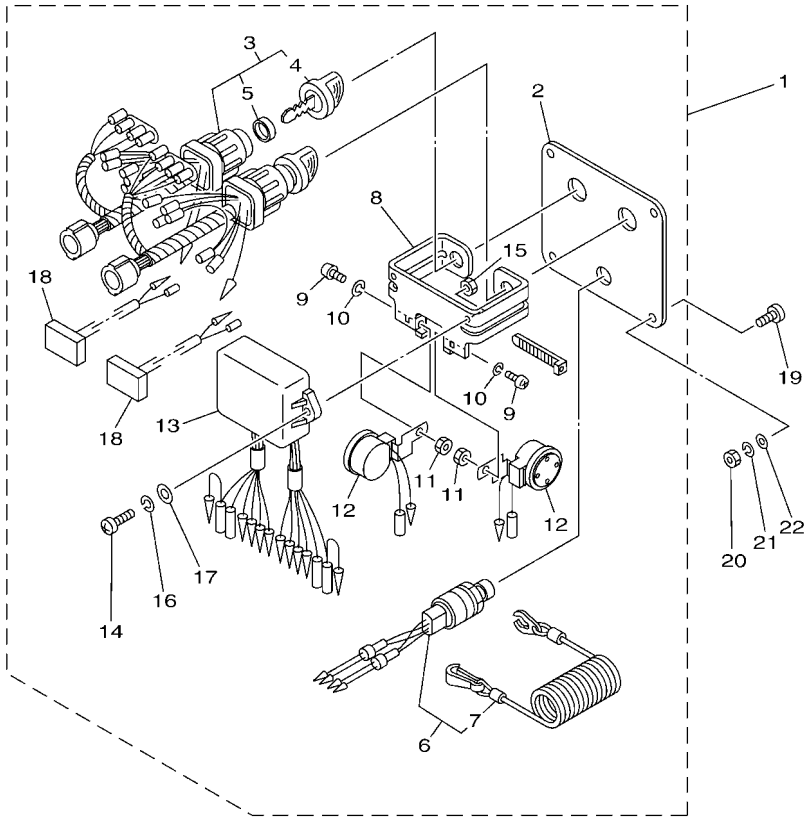

601R10R-M310

REF. NO.	PART NO.	DESCRIPTION	601R					REMARKS
1	6K1–82570–13	PANEL SWITCH ASSY	1					WITH CHOKE SW.
2	6K1–82571–02	.PLATE, PANEL SWITCH	1					
3	6K1–82510–07	.MAIN SWITCH ASSY	2					
4	703–82577–00	..CAP, KEY	1					
5	6K1–82532–00	..CAP	1					
6	6K1–82575–01	.ENGINE STOP SWITCH ASSY	1					
7	682–82556–00	..LANYARD, STOP SWITCH	1					
8	6K1–83614–01	.BRACKET	1					
9	98980–05010	.SCREW, BIND	2					
10	92990–05100	.WASHER, SPRING	2					
11	95380–05600	.NUT	2					
12	688–83383–12	.BUZZER	2					
13	6K1–85830–02	.CONTROL UNIT ASSY	1					
14	98980–06020	.SCREW, BIND	2					
15	95380–06600	.NUT, HEXAGON	2					
16	92990–06100	.WASHER, SPRING	2					
17	92990–06600	.WASHER, PLATE	2					
18	6K1–81980–00	.DIODE ASSY	2					
19	90149–05M05	SCREW	4					
20	95380–05600	NUT	4					
21	92990–05100	WASHER, SPRING	4					
22	92990–05600	WASHER, PLATE	4					

FIG. 31 SWITCH & PANEL 7

TWIN IG SWITCH

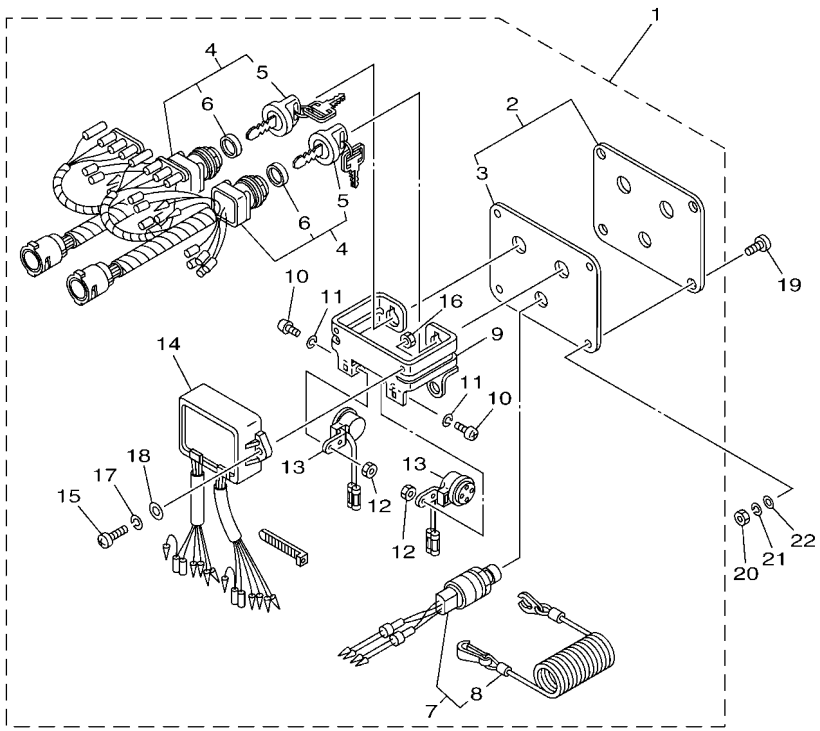

601R10R-K320

REF. NO.	PART NO.	DESCRIPTION	601R					REMARKS
1	61B–82570–06	PANEL SWITCH ASSY	1					WITHOUT CHOKE SW.
2	6K1–82571–02	.PLATE, PANEL SWITCH	1					
3	61B–82588–01	..PLATE	1					
4	61B–82510–02	.MAIN SWITCH ASSY	2					
5	676–82577–01	..CAP, KEY	1					
6	703–82532–00	..CAP	1					
7	6K1–82575–01	.ENGINE STOP SWITCH ASSY	1					
8	682–82556–00	..LANYARD, STOP SWITCH	1					
9	6K1–83614–01	.BRACKET	1					
10	98980–05010	.SCREW, BIND	2					
11	92990–05100	.WASHER, SPRING	2					
12	95380–05600	.NUT	2					
13	6R5–83383–00	.BUZZER	2					
14	61B–85830–01	.CONTROL UNIT ASSY	1					
15	98980–06020	.SCREW, BIND	2					
16	95380–06600	.NUT, HEXAGON	2					
17	92990–06100	.WASHER, SPRING	2					
18	92990–06600	.WASHER, PLATE	2					
19	90149–05M05	SCREW	4					
20	95380–05600	NUT	4					
21	92990–05100	WASHER, SPRING	4					
22	92990–05600	WASHER, PLATE	4					

FIG. 32 SWITCH & PANEL 8

TWIN IG SWITCH
(FOR DIGITAL NETWORK SYSTEM-6Y8)

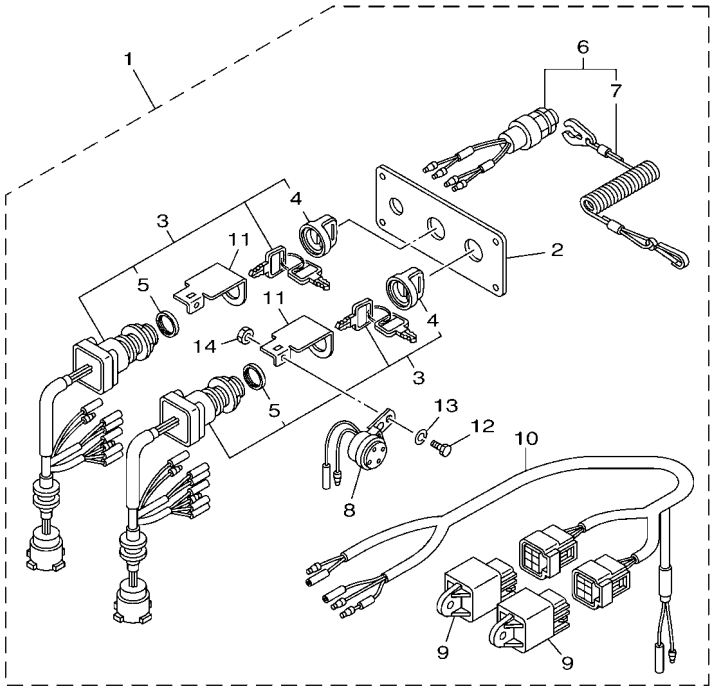

601R10R-M330

REF. NO.	PART NO.	DESCRIPTION	601R					REMARKS
1	6Y8–82570–04	PANEL SWITCH ASSY	1					1 & 2 STATION MAIN
2	6Y8–82571–01	.PLATE, PANEL SWITCH	1					
3	6Y8–82510–03	.MAIN SWITCH ASSY	2					
4	676–82577–01	..CAP, KEY	1					
5	703–82532–00	..CAP	1					
6	6K1–82575–01	.ENGINE STOP SWITCH ASSY	1					
7	682–82556–00	..LANYARD, STOP SWITCH	1					
8	6R5–83383–00	.BUZZER	2					
9	68V–81950–00	.RELAY ASSY	2					
10	6Y8–82507–00	.LEAD, IGNITION SWITCH RELAY	1					
11	64D–82581–00	.STAY, CORD CLAMP	2					
12	97003–05012	.BOLT	2					
13	92903–05100	.WASHER, SPRING	2					
14	95303–05700	.NUT	2					

DIGITAL NETWORK SYSTEM-6Y9
(TWIN : 1 & 2 STATION-MAIN)

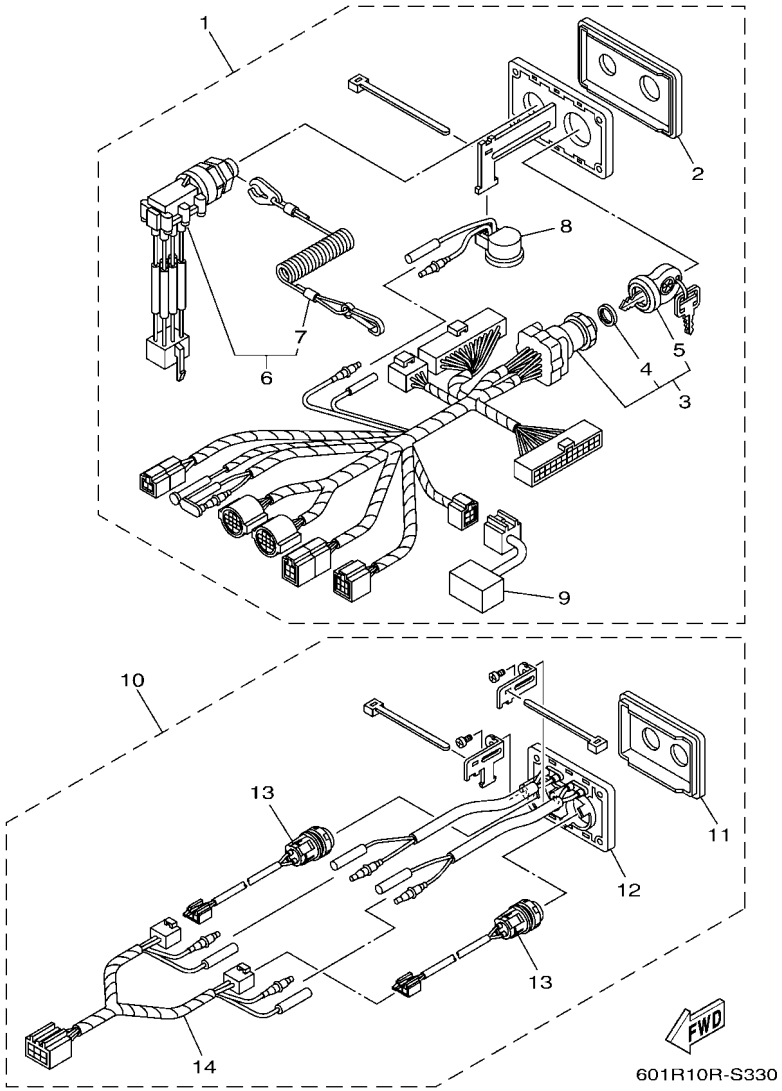

FIG. 33 SWITCH & PANEL 9

REF. NO.	PART NO.	DESCRIPTION	601R					REMARKS
1	6X6–82570–40	PANEL SWITCH ASSY	1					1 & 2 STATION MAIN
2	6X6–82571–10	.PANEL, SWITCH	1					
3	6X6–82510–10	.MAIN SWITCH ASSY	1					
4	703–82532–00	..CAP	1					
5	6X6–82511–09–A1	..KEY, MAIN SWITCH	1					UR
	6X6–82511–09–A2	..KEY, MAIN SWITCH	1					UR
	6X6–82511–09–A3	..KEY, MAIN SWITCH	1					UR
	6X6–82511–09–A4	..KEY, MAIN SWITCH	1					UR
	6X6–82511–09–A5	..KEY, MAIN SWITCH	1					UR
	6X6–82511–09–A6	..KEY, MAIN SWITCH	1					UR
	6X6–82511–09–A7	..KEY, MAIN SWITCH	1					UR
	6X6–82511–09–A8	..KEY, MAIN SWITCH	1					UR
	6X6–82511–09–A9	..KEY, MAIN SWITCH	1					UR
6	6X6–82575–10	.ENGINE STOP SWITCH ASSY	1					
7	682–82556–00	..LANYARD, STOP SWITCH	1					
8	703–83383–A0	.BUZZER	1					
9	6X6–81980–00	.DIODE ASSY	1					
10	6X6–82570–60	PANEL SWITCH ASSY	1					1 & 2 STATION MAIN
11	6X6–82571–20	.PANEL, SWITCH	1					
12	6X6–83720–00	.L.E.D ASS'Y	1					
13	6X6–8259E–20	.SWITCH ASSY	2					
14	6X6–82716–00	.CORD SWITCH	1					

DIGITAL NETWORK SYSTEM-6Y9
(TWIN : 2 STATION-SUB)

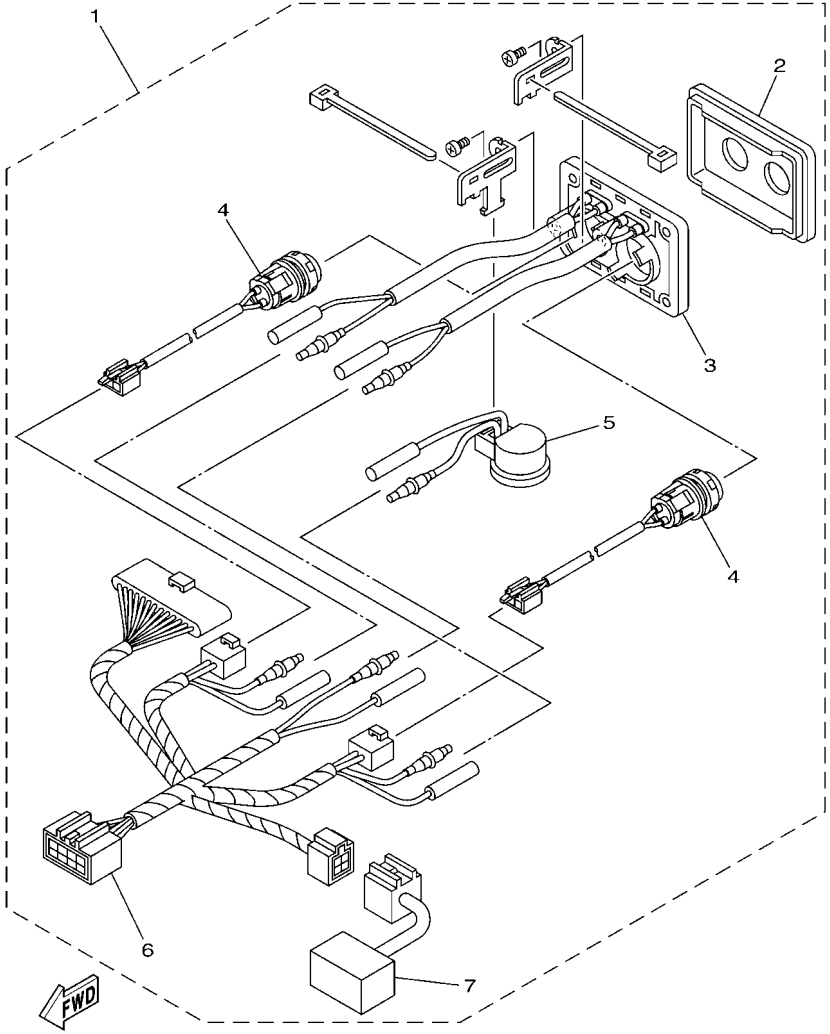

601R10R-S340

FIG. 34 SWITCH & PANEL 10

REF. NO.	PART NO.	DESCRIPTION	601R					REMARKS
1	6X6–82570–E0	PANEL SWITCH ASSY	1					2 STATION SUB
2	6X6–82571–20	.PANEL, SWITCH	1					
3	6X6–83720–00	.L.E.D ASS'Y	1					
4	6X6–8259E–20	.SWITCH ASSY	2					
5	703–83383–A0	.BUZZER	1					
6	6X6–82716–40	.CORD SWITCH	1					
7	6X6–81980–00	.DIODE ASSY	1					

TRIPLE IG SWITCH
(FOR DIGITAL NETWORK SYSTEM-6Y8)

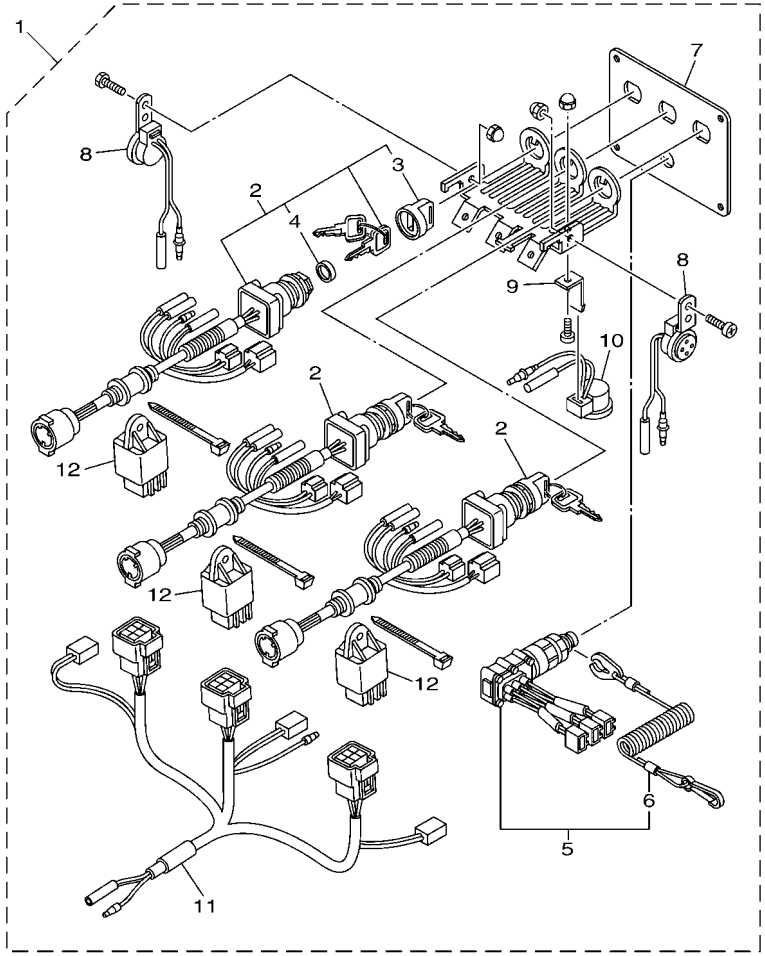

601R10R-K360

FIG. 35 SWITCH & PANEL 11

REF. NO.	PART NO.	DESCRIPTION	601R					REMARKS
1	6X5–82570–02	PANEL SWITCH ASSY	1					1 & 2 STATION MAIN
2	6X5–82510–02	.MAIN SWITCH ASSY	3					
3	676–82577–01	..CAP, KEY	1					
4	703–82532–00	..CAP	1					
5	6X5–82575–00	.ENGINE STOP SWITCH ASSY	1					
6	682–82556–00	..LANYARD, STOP SWITCH	1					
7	6X5–82571–00	.PANEL, SWITCH	1					
8	6X5–83383–00	.BUZZER	2					
9	6X5–82581–00	.STAY, CORD CLAMP	1					
10	6X4–83383–00	.BUZZER	1					
11	6X5–82507–00	.WIRE, LEAD	1					
12	68V–81950–00	.RELAY ASSY	3					

DIGITAL NETWORK SYSTEM-6Y9
(TRIPLE :1 & 2 STATION-MAIN)

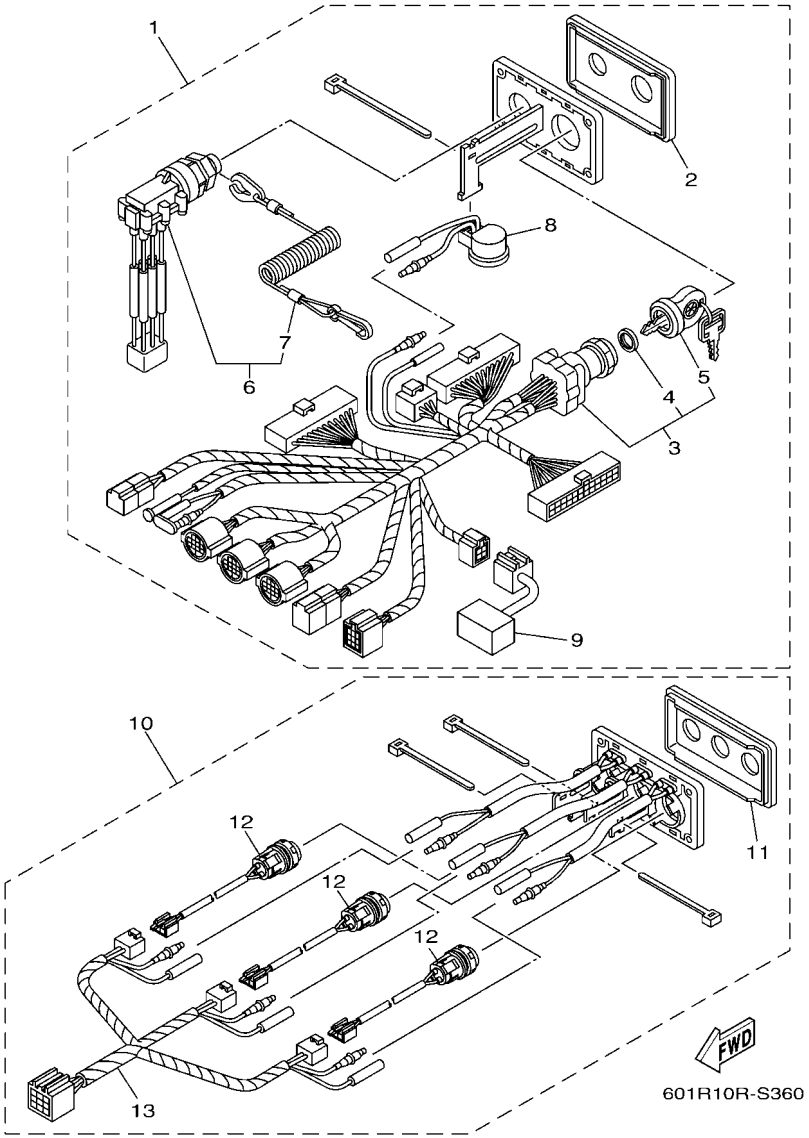

FIG. 36 SWITCH & PANEL 12

REF. NO.	PART NO.	DESCRIPTION	601R					REMARKS
1	6X6–82570–50	PANEL SWITCH ASSY	1					1 & 2 STATION MAIN
2	6X6–82571–10	.PANEL, SWITCH	1					
3	6X6–82510–20	.MAIN SWITCH ASSY	1					
4	703–82532–00	..CAP	1					
5	6X6–82511–09–A1	..KEY, MAIN SWITCH	1					UR
	6X6–82511–09–A2	..KEY, MAIN SWITCH	1					UR
	6X6–82511–09–A3	..KEY, MAIN SWITCH	1					UR
	6X6–82511–09–A4	..KEY, MAIN SWITCH	1					UR
	6X6–82511–09–A5	..KEY, MAIN SWITCH	1					UR
	6X6–82511–09–A6	..KEY, MAIN SWITCH	1					UR
	6X6–82511–09–A7	..KEY, MAIN SWITCH	1					UR
	6X6–82511–09–A8	..KEY, MAIN SWITCH	1					UR
	6X6–82511–09–A9	..KEY, MAIN SWITCH	1					UR
6	6X6–82575–10	.ENGINE STOP SWITCH ASSY	1					
7	682–82556–00	..LANYARD, STOP SWITCH	1					
8	703–83383–A0	.BUZZER	1					
9	6X6–81980–00	.DIODE ASSY	1					
10	6X6–82570–70	PANEL SWITCH ASSY	1					1 & 2 STATION MAIN
11	6X6–82571–30	.PANEL, SWITCH	1					
12	6X6–8259E–20	.SWITCH ASSY	3					
13	6X6–82716–10	.CORD SWITCH	1					

DIGITAL NETWORK SYSTEM-6Y9
(TRIPLE : 2 STATION-SUB)

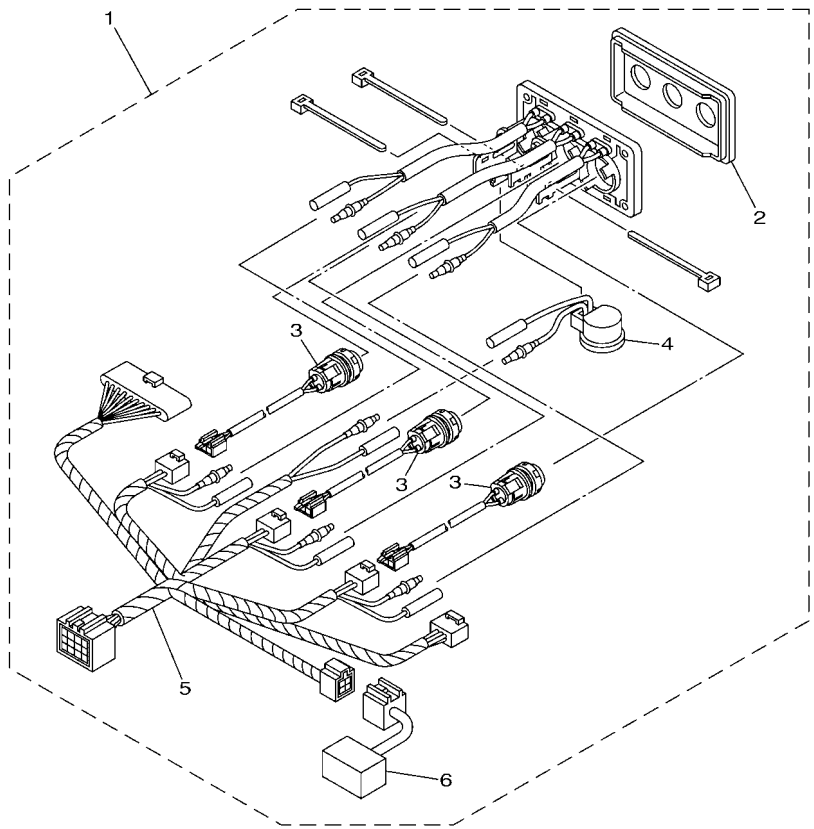

601R10R-K380

FIG. 37 SWITCH & PANEL 13

REF. NO.	PART NO.	DESCRIPTION	601R					REMARKS
1	6X6–82570–F0	PANEL SWITCH ASSY	1					2 STATION SUB
2	6X6–82571–30	.PANEL, SWITCH	1					
3	6X6–8259E–20	.SWITCH ASSY	3					
4	703–83383–A0	.BUZZER	1					
5	6X6–82716–50	.CORD SWITCH	1					
6	6X6–81980–00	.DIODE ASSY	1					

DIGITAL NETWORK SYSTEM-6Y9
(SINGLE / TWIN / TRIPLE-2 STATION)

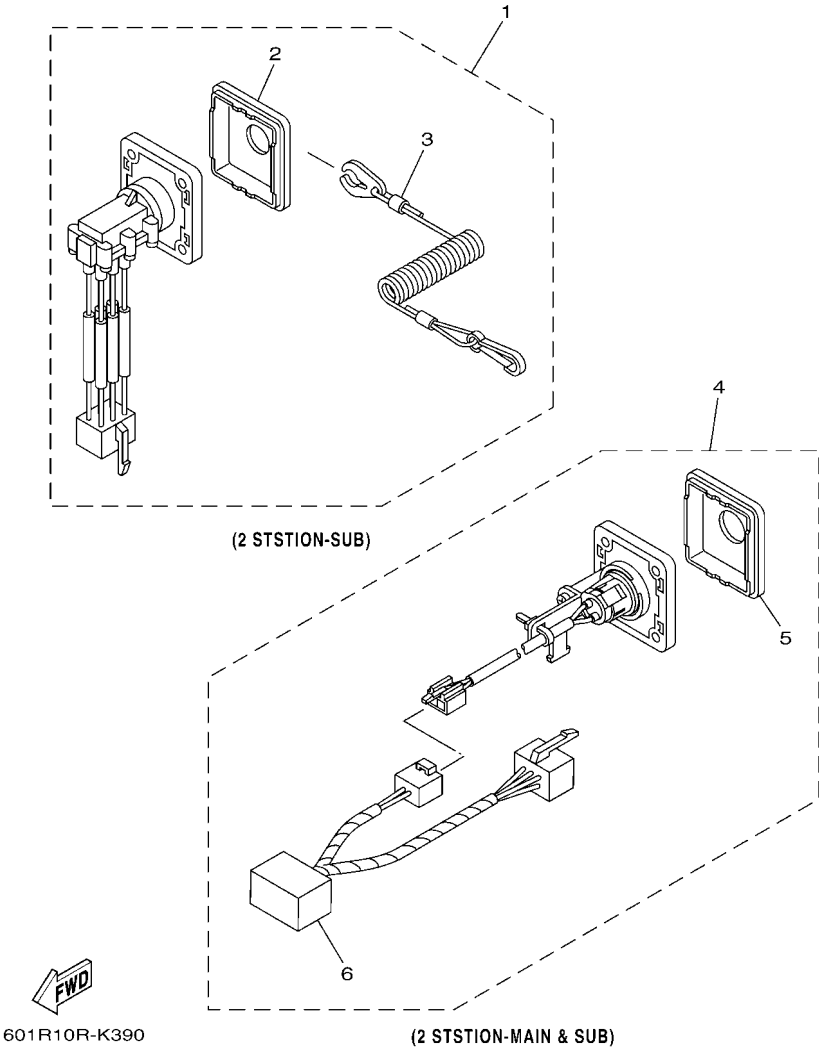

FIG. 38 SWITCH & PANEL 14

REF. NO.	PART NO.	DESCRIPTION	601R					REMARKS
1	6X6–82570–90	PANEL SWITCH ASSY	1					2 STATION SUB
2	6X6–82571–50	.PANEL, SWITCH	1					
3	682–82556–00	.LANYARD, STOP SWITCH	1					
4	6X6–82570–B0	PANEL SWITCH ASSY	2					2 STATION MAIN & SUB
5	6X6–82571–70	.PANEL, SWITCH	1					
6	6X6–81980–10	.DIODE ASSY	1					

FIG. 39 SWITCH & PANEL 15

DIGITAL NETWORK SYSTEM-6Y9
(QUAD : 1 & 2 STATION-MAIN)

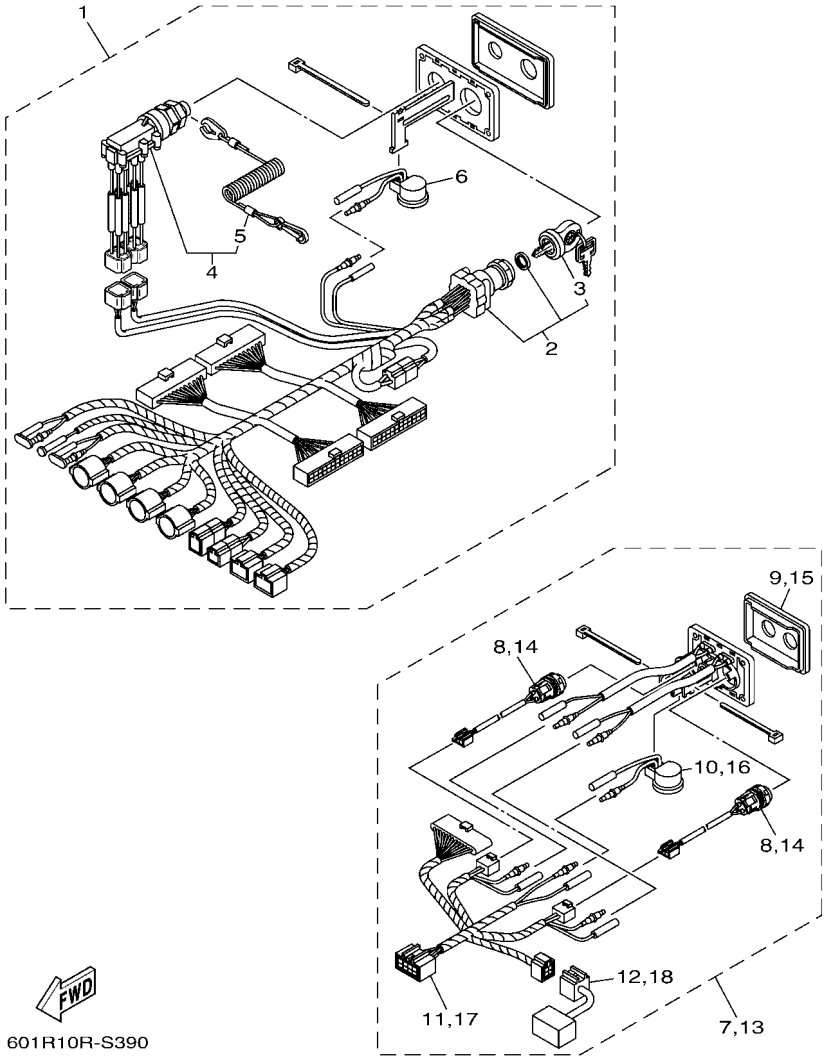

601R10R-S390

REF. NO.	PART NO.	DESCRIPTION	601R					REMARKS
1	6X6–82570–G0	PANEL SWITCH ASSY	1					1 & 2 STATION MAIN
2	6X6–82510–40	.MAIN SWITCH ASSY	1					
3	6X6–82511–09–A1	.KEY, MAIN SWITCH	1					UR
	6X6–82511–09–A2	.KEY, MAIN SWITCH	1					UR
	6X6–82511–09–A3	.KEY, MAIN SWITCH	1					UR
	6X6–82511–09–A4	.KEY, MAIN SWITCH	1					UR
	6X6–82511–09–A5	.KEY, MAIN SWITCH	1					UR
	6X6–82511–09–A6	.KEY, MAIN SWITCH	1					UR
	6X6–82511–09–A7	.KEY, MAIN SWITCH	1					UR
	6X6–82511–09–A8	.KEY, MAIN SWITCH	1					UR
	6X6–82511–09–A9	.KEY, MAIN SWITCH	1					UR
4	6ES–82575–10	.ENGINE STOP SWITCH ASSY	1					
5	682–82556–00	..LANYARD, STOP SWITCH	1					
6	703–83383–A0	.BUZZER	1					
7	6X6–82570–J0	PANEL SWITCH ASSY (PORT-P/CP)	1					1 & 2 STATION MAIN
8	6X6–8259E–20	.SWITCH ASSY	2					
9	6X6–82571–80	.PANEL, SWITCH	1					
10	703–83383–A0	.BUZZER	1					
11	6X6–82716–40	.CORD SWITCH	1					
12	6X6–81980–00	.DIODE ASSY	1					
13	6X6–82570–K0	PANEL SWITCH ASSY (STBD-CS/S)	1					1 & 2 STATION MAIN
14	6X6–8259E–20	.SWITCH ASSY	2					
15	6X6–82571–90	.PANEL, SWITCH	1					
16	703–83383–A0	.BUZZER	1					
17	6X6–82716–40	.CORD SWITCH	1					
18	6X6–81980–00	.DIODE ASSY	1					

DIGITAL NETWORK SYSTEM-6Y9
(QUAD : 2 STATION-SUB)

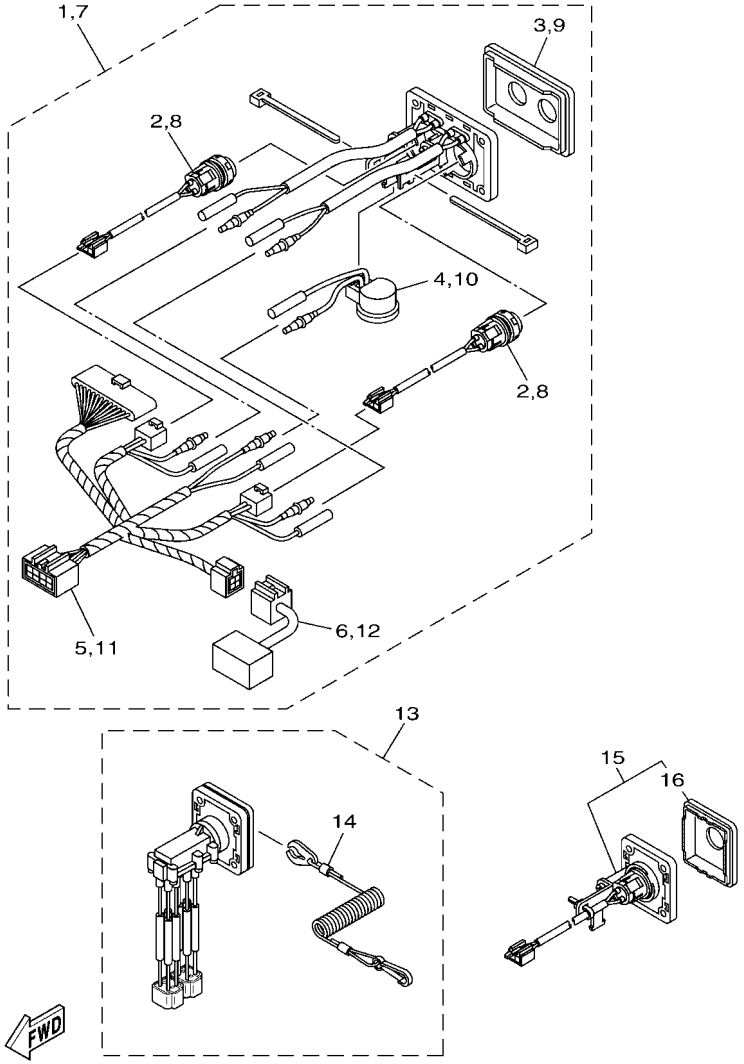

601R10R-R380

FIG. 40 SWITCH & PANEL 16

REF. NO.	PART NO.	DESCRIPTION	601R					REMARKS
1	6X6–82570–J0	PANEL SWITCH ASSY (PORT-P/CP)	1					2 STATION SUB
2	6X6–8259E–20	.SWITCH ASSY	2					
3	6X6–82571–80	.PANEL, SWITCH	1					
4	703–83383–A0	.BUZZER	1					
5	6X6–82716–40	.CORD SWITCH	1					
6	6X6–81980–00	.DIODE ASSY	1					
7	6X6–82570–K0	PANEL SWITCH ASSY (STBD-CS/S)	1					2 STATION SUB
8	6X6–8259E–20	.SWITCH ASSY	2					
9	6X6–82571–90	.PANEL, SWITCH	1					
10	703–83383–A0	.BUZZER	1					
11	6X6–82716–40	.CORD SWITCH	1					
12	6X6–81980–00	.DIODE ASSY	1					
13	6ES–82570–00	ENGINE STOP SWITCH ASSY (QUAD)	1					2 STATION SUB
14	682–82556–00	.LANYARD, STOP SWITCH	1					
15	6X6–82570–L0	PANEL SWITCH ASSY	1					2 STATION MAIN & SUB
16	6X6–82571–70	.PANEL, SWITCH	1					

IG SWITCH W/ PANEL

Part No.	Remarks
64D-82570-05	With bullet connectors for emergency stop switch
64D-82570-22	With 2-pin coupler for emergency stop switch, For 6X3 and 6X7 remote control

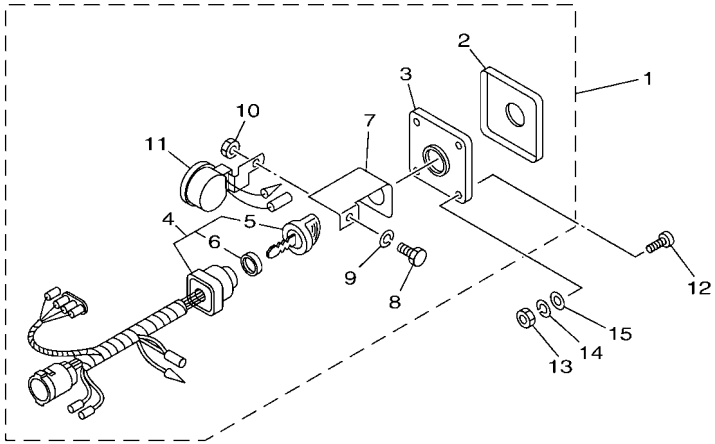

EMERGENCY STOP SWITCH W/ PANEL

Part No.	Remarks
64D-82570-11	With bullet connectors for stop switch
64D-82570-31	With 2-pin coupler for stop switch

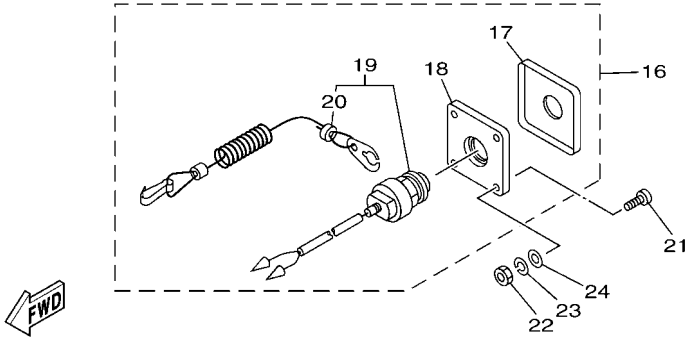

601R10R-Q400

FIG. 41 SWITCH & PANEL 17

REF. NO.	PART NO.	DESCRIPTION	601R					REMARKS
1	64D–82570–05	PANEL SWITCH ASSY	1					UR
	64D–82570–22	PANEL SWITCH ASSY	1					UR
2	64D–82571–00	.PANEL, SWITCH	1					
3	64D–82588–00	.PLATE	1					
4	64D–82510–04	.MAIN SWITCH ASSY	1					FOR 64D-82570-05
	64D–82510–21	.MAIN SWITCH ASSY	1					FOR 64D-82570-22
5	703–82577–00	..CAP, KEY	1					
6	6K1–82532–00	..CAP	1					
7	64D–82581–00	.STAY, CORD CLAMP	1					
8	97303–05012	.BOLT	1					
9	92903–05100	.WASHER, SPRING	1					
10	95303–05700	.NUT	1					
11	688–83383–12	.BUZZER	1					
12	90149–05M05	SCREW	4					
13	95380–05600	NUT	4					
14	92990–05100	WASHER, SPRING	4					
15	92990–05600	WASHER, PLATE	4					
16	64D–82570–11	PANEL SWITCH ASSY	1					UR
	64D–82570–31	PANEL SWITCH ASSY	1					UR
17	64D–82571–10	.PANEL, SWITCH	1					
18	64D–82588–10	.PLATE	1					
19	64D–82575–01	.ENGINE STOP SWITCH ASSY	1					FOR 64D-82570-11
	64D–82575–11	.ENGINE STOP SWITCH ASSY	1					FOR 64D-82570-31
20	682–82556–00	..LANYARD, STOP SWITCH	1					
21	90149–05M05	SCREW	4					
22	95380–05600	NUT	4					
23	92990–05100	WASHER, SPRING	4					

IG SWITCH W/ PANEL

Part No.	Remarks
64D-82570-05	With bullet connectors for emergency stop switch
64D-82570-22	With 2-pin coupler for emergency stop switch, For 6X3 and 6X7 remote control

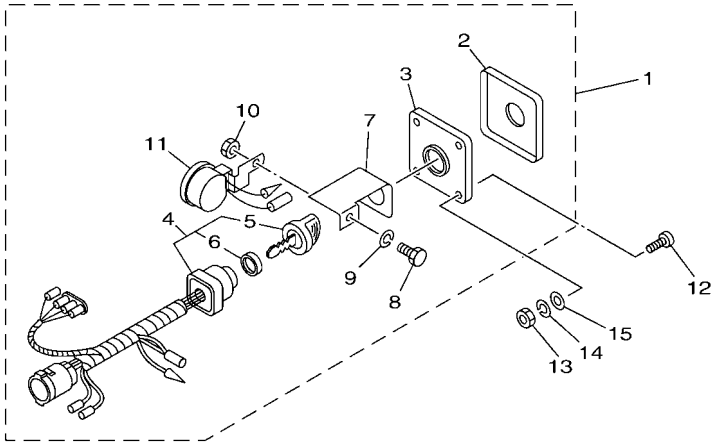

EMERGENCY STOP SWITCH W/ PANEL

Part No.	Remarks
64D-82570-11	With bullet connectors for stop switch
64D-82570-31	With 2-pin coupler for stop switch

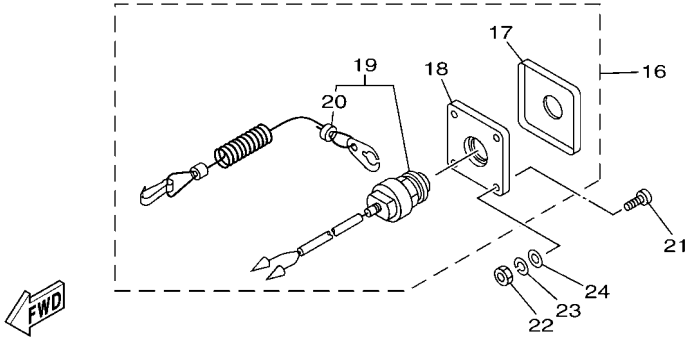

601R10R-Q400

FIG. 41 SWITCH & PANEL 17

REF. NO.	PART NO.	DESCRIPTION	601R					REMARKS
24	92990–05600	WASHER, PLATE	4					

IG SWITCH W/O PANEL

Ref. No.	Part No.	Remarks
1	704-82510-0A	With bullet connectors for stop switch
4	6X3-8257B-01	With 2-pin coupler for stop switch, For 6X3 and 6X7 remote control

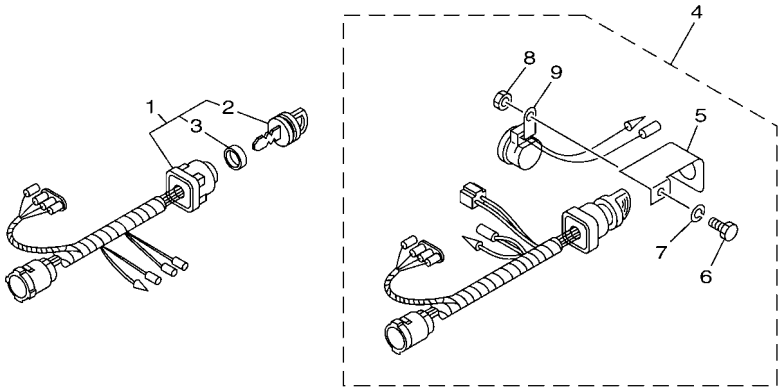

EMERGENCY STOP SWITCH W/O PANEL

Ref. No.	Part No.	Remarks
10	688-82575-12	With bullet connectors for stop switch
12	64D-82575-11	With 2-pin coupler for stop switch

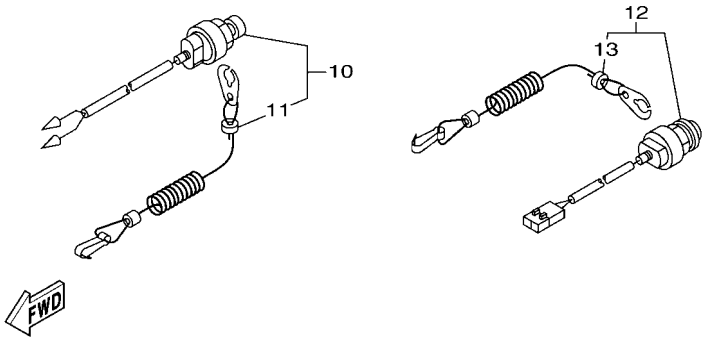

601R10R-Q410

FIG. 42 SWITCH & PANEL 18

REF. NO.	PART NO.	DESCRIPTION	601R					REMARKS
1	704–82510–0A	MAIN SWITCH ASSY	1					
2	703–82577–00	.CAP, KEY	1					
3	6K1–82532–00	.CAP	1					
4	6X3–8257B–01	PANEL SWITCH COMP.	1					
5	64D–82581–00	.STAY, CORD CLAMP	1					
6	97303–05012	.BOLT	1					
7	92903–05100	.WASHER, SPRING	1					
8	95303–05700	.NUT	1					
9	6R5–83383–00	.BUZZER	1					
10	688–82575–12	ENGINE STOP SWITCH ASSY	1					
11	682–82556–00	.LANYARD, STOP SWITCH	1					
12	64D–82575–11	ENGINE STOP SWITCH ASSY	1					
13	682–82556–00	.LANYARD, STOP SWITCH	1					

ADAPTER FOR EMERGENCY STOP SWITCH LEAD

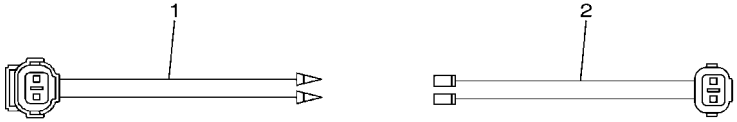

ENGINE SHUT-OFF LANYARD (CORD)

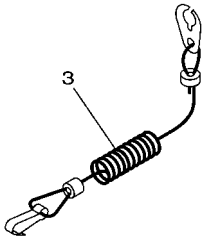

PT/T SWITCH PANEL
(FOR PTT MODELS)

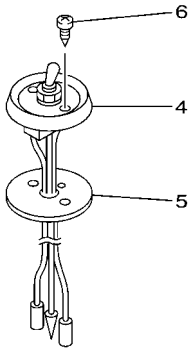

6011100-G330

FIG. 43 SWITCH & PANEL 19

REF. NO.	PART NO.	DESCRIPTION	601R					REMARKS
1	6X3–81971–00	WIRE, LEAD	1					
2	6X3–81971–10	WIRE, LEAD	1					
3	682–82556–00	LANYARD, STOP SWITCH	1					
4	688–82563–10	TRIM & TILT SWITCH ASSY	1					
5	688–82388–00	PLATE	1					
6	97780–40116	SCREW, TAPPING	2					

SWITCH PANEL HARNESS

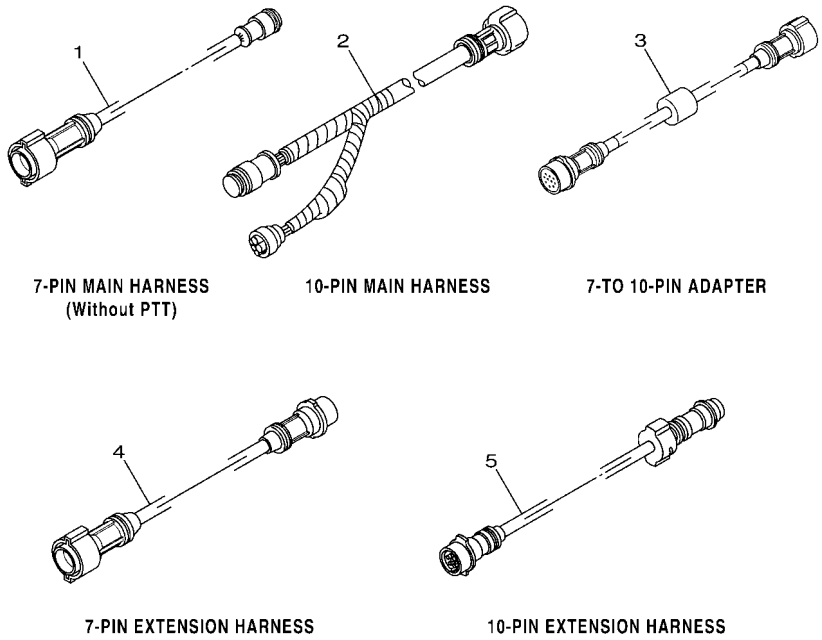

601R10R-P430

FIG. 44 WIRE HARNESS 1

REF. NO.	PART NO.	DESCRIPTION	601R					REMARKS
1	688–82586–50	EXTENSION, WIRE HARNESS (5M)	1					(7P)
2	688–8258A–50	EXTENSION, WIRE HARNESS (5M)	1					UR (10P)
	688–8258A–60	EXTENSION, WIRE HARNESS (6M)	1					UR (10P)
	688–8258A–70	EXTENSION, WIRE HARNESS (7M)	1					UR (10P)
	6K1–8258A–40	EXTENSION, WIRE HARNESS (8M)	1					UR (10P)
	61B–8258A–01	EXTENSION, WIRE HARNESS (9.5M)	1					UR (10P)
3	703–8258A–00	EXTENSION, WIRE HARNESS (0.5M)	1					7P TO 10P ADAPTER
4	688–82586–11	EXTENSION, WIRE HARNESS (2.0M)	1					UR L:2M(7P)
	688–82586–31	EXTENSION, WIRE HARNESS (3.0M)	1					UR L:3M(7P)
5	688–8258A–10	EXTENSION, WIRE HARNESS (2M)	1					UR (10P)
	688–8258A–30	EXTENSION, WIRE HARNESS (3M)	1					UR (10P)

DIGITAL ELECTRONIC REMOTE CONTROL WIRE HARNESS

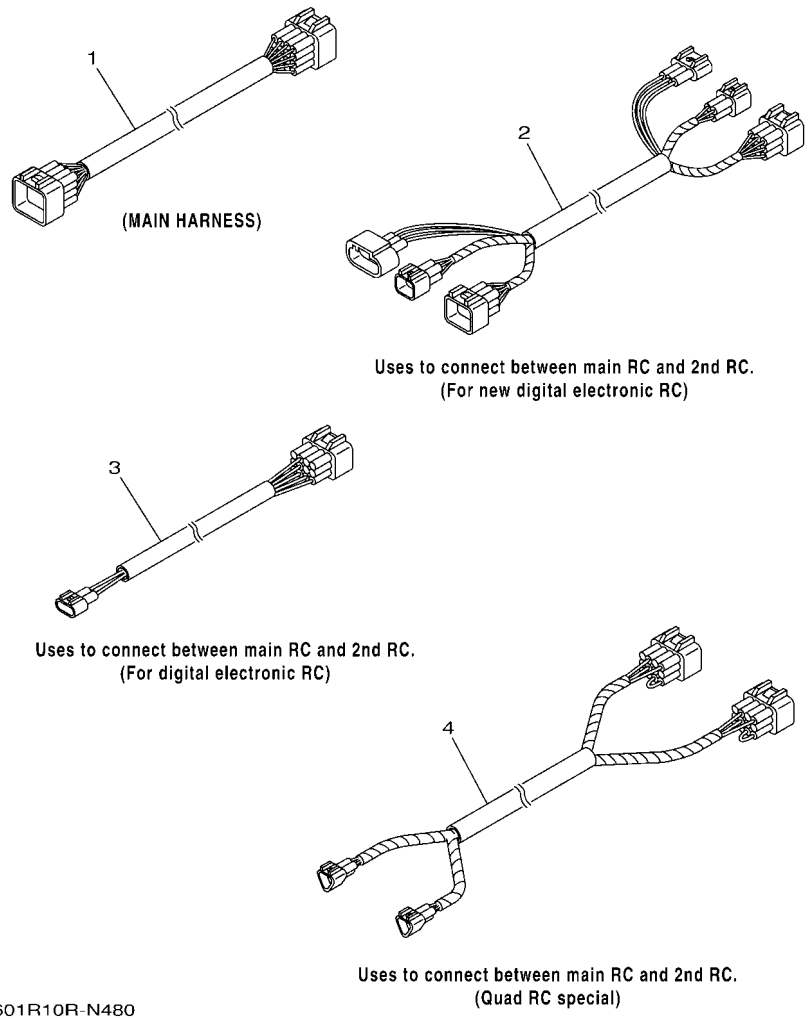

601R10R-N480

FIG. 45 WIRE HARNESS 2

REF. NO.	PART NO.	DESCRIPTION	601R					REMARKS
1	6X6–8258A–00	EXTENSION, WIRE HARNESS (6.1M)	1					UR FOR SINGLE
	6X6–8258A–00	EXTENSION, WIRE HARNESS (6.1M)	2					UR FOR TWIN
	6X6–8258A–00	EXTENSION, WIRE HARNESS (6.1M)	3					UR FOR TRIPLE
	6X6–8258A–00	EXTENSION, WIRE HARNESS (6.1M)	4					UR FOR QUAD
	6X6–8258A–10	EXTENSION, WIRE HARNESS (7M)	1					UR FOR SINGLE
	6X6–8258A–10	EXTENSION, WIRE HARNESS (7M)	2					UR FOR TWIN
	6X6–8258A–10	EXTENSION, WIRE HARNESS (7M)	3					UR FOR TRIPLE
	6X6–8258A–10	EXTENSION, WIRE HARNESS (7M)	4					UR FOR QUAD
	6X6–8258A–20	EXTENSION, WIRE HARNESS (8M)	1					UR FOR SINGLE
	6X6–8258A–20	EXTENSION, WIRE HARNESS (8M)	2					UR FOR TWIN
	6X6–8258A–20	EXTENSION, WIRE HARNESS (8M)	3					UR FOR TRIPLE
	6X6–8258A–20	EXTENSION, WIRE HARNESS (8M)	4					UR FOR QUAD
	6X6–8258A–30	EXTENSION, WIRE HARNESS (10M)	1					UR FOR SINGLE
	6X6–8258A–30	EXTENSION, WIRE HARNESS (10M)	2					UR FOR TWIN
	6X6–8258A–30	EXTENSION, WIRE HARNESS (10M)	3					UR FOR TRIPLE
	6X6–8258A–30	EXTENSION, WIRE HARNESS (10M)	4					UR FOR QUAD
	6X6–8258A–40	EXTENSION, WIRE HARNESS (12M)	1					UR FOR SINGLE
	6X6–8258A–40	EXTENSION, WIRE HARNESS (12M)	2					UR FOR TWIN
	6X6–8258A–40	EXTENSION, WIRE HARNESS (12M)	3					UR FOR TRIPLE
	6X6–8258A–40	EXTENSION, WIRE HARNESS (12M)	4					UR FOR QUAD
	6X6–8258A–50	EXTENSION, WIRE HARNESS (3.7M)	1					UR FOR SINGLE
	6X6–8258A–50	EXTENSION, WIRE HARNESS (3.7M)	2					UR FOR TWIN
	6X6–8258A–50	EXTENSION, WIRE HARNESS (3.7M)	3					UR FOR TRIPLE
	6X6–8258A–50	EXTENSION, WIRE HARNESS (3.7M)	4					UR FOR QUAD
	6X6–8258A–60	EXTENSION, WIRE HARNESS (5.2M)	1					UR FOR SINGLE
	6X6–8258A–60	EXTENSION, WIRE HARNESS (5.2M)	2					UR FOR TWIN
	6X6–8258A–60	EXTENSION, WIRE HARNESS (5.2M)	3					UR FOR TRIPLE

DIGITAL ELECTRONIC REMOTE CONTROL WIRE HARNESS

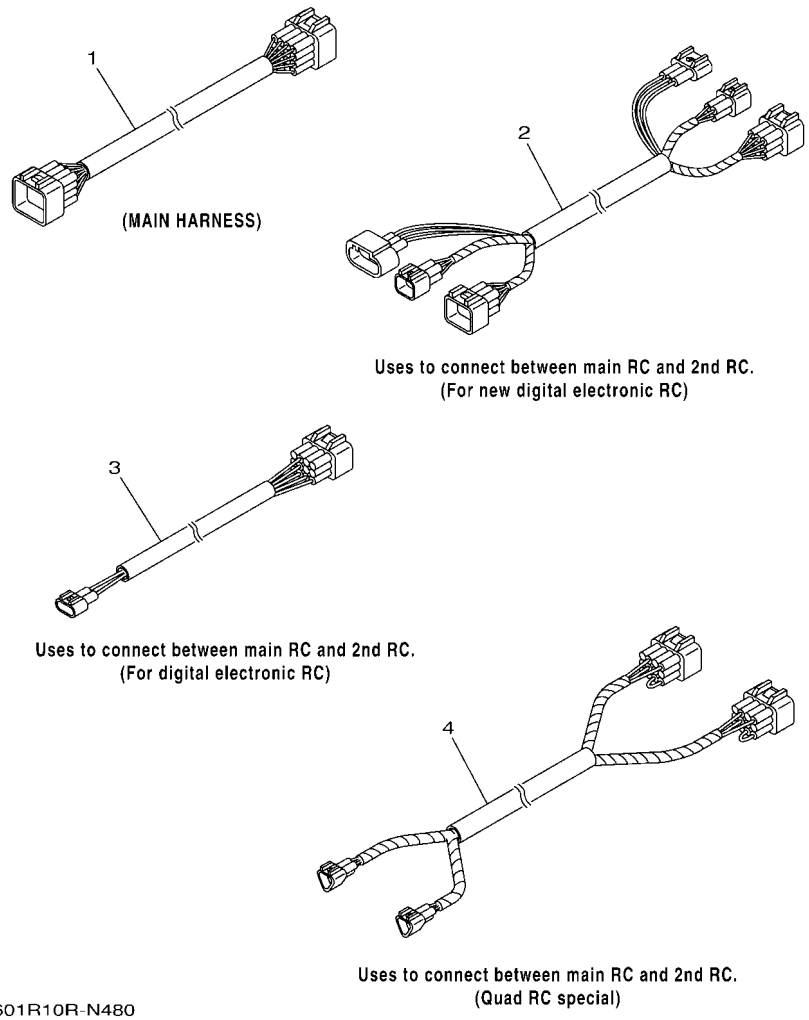

601R10R-N480

FIG. 45 WIRE HARNESS 2

REF. NO.	PART NO.	DESCRIPTION	601R					REMARKS
1	6X6–8258A–60	EXTENSION, WIRE HARNESS (5.2M)	4					UR FOR QUAD
2	6X6–8258A–G1	EXTENSION, WIRE HARNESS (5M)	1					UR FOR SINGLE
	6X6–8258A–G1	EXTENSION, WIRE HARNESS (5M)	2					UR FOR TWIN
	6X6–8258A–G1	EXTENSION, WIRE HARNESS (5M)	3					UR FOR TRIPLE
	6X6–8258A–G1	EXTENSION, WIRE HARNESS (5M)	4					UR FOR QUAD
	6X6–8258A–H1	EXTENSION, WIRE HARNESS (8M)	1					UR FOR SINGLE
	6X6–8258A–H1	EXTENSION, WIRE HARNESS (8M)	2					UR FOR TWIN
	6X6–8258A–H1	EXTENSION, WIRE HARNESS (8M)	3					UR FOR TRIPLE
	6X6–8258A–H1	EXTENSION, WIRE HARNESS (8M)	4					UR FOR QUAD
	6X6–8258A–J1	EXTENSION, WIRE HARNESS: 12.2M	1					UR FOR SINGLE
	6X6–8258A–J1	EXTENSION, WIRE HARNESS: 12.2M	2					UR FOR TWIN
	6X6–8258A–J1	EXTENSION, WIRE HARNESS: 12.2M	3					UR FOR TRIPLE
	6X6–8258A–J1	EXTENSION, WIRE HARNESS: 12.2M	4					UR FOR QUAD
3	6X6–8258A–B1	EXTENSION, WIRE HARNESS (5M)	1					UR FOR SINGLE
	6X6–8258A–B1	EXTENSION, WIRE HARNESS (5M)	2					UR FOR TWIN,QUAD
	6X6–8258A–B1	EXTENSION, WIRE HARNESS (5M)	3					UR FOR TRIPLE
	6X6–8258A–D1	EXTENSION, WIRE HARNESS (8M)	1					UR FOR SINGLE
	6X6–8258A–D1	EXTENSION, WIRE HARNESS (8M)	2					UR FOR TWIN,QUAD
	6X6–8258A–D1	EXTENSION, WIRE HARNESS (8M)	3					UR FOR TRIPLE
	6X6–8258A–F1	EXTENSION, WIRE HARNESS: 12.2M	1					UR FOR SINGLE
	6X6–8258A–F1	EXTENSION, WIRE HARNESS: 12.2M	2					UR FOR TWIN,QUAD
	6X6–8258A–F1	EXTENSION, WIRE HARNESS: 12.2M	3					UR FOR TRIPLE
4	6X6–8258A–R0	EXTENSION, WIRE HARNESS (5M)	2					UR FOR QUAD
	6X6–8258A–S0	EXTENSION, WIRE HARNESS (8M)	2					UR FOR QUAD
	6X6–8258A–T0	EXTENSION, WIRE HARNESS: 12.2M	2					UR FOR QUAD

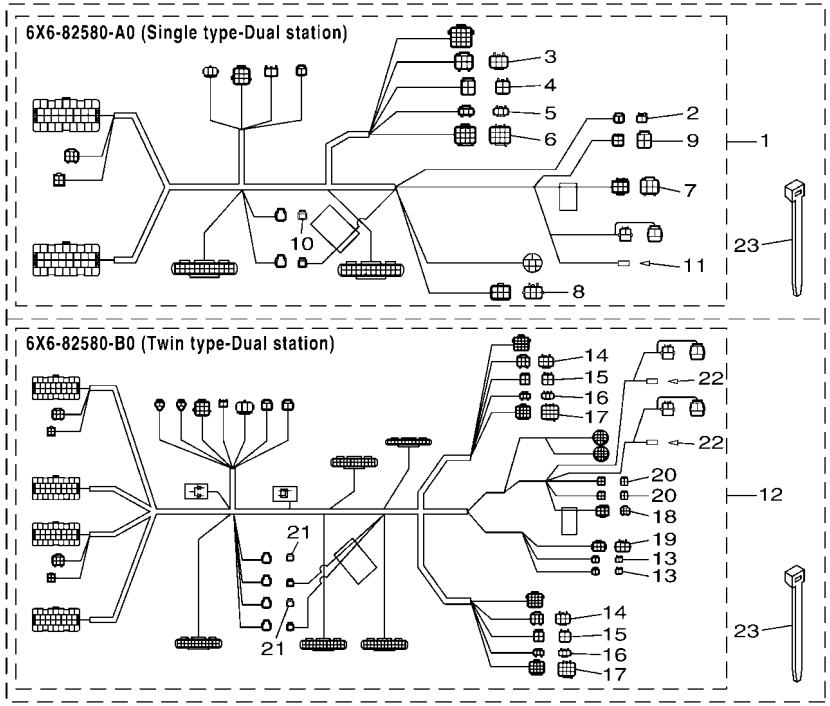

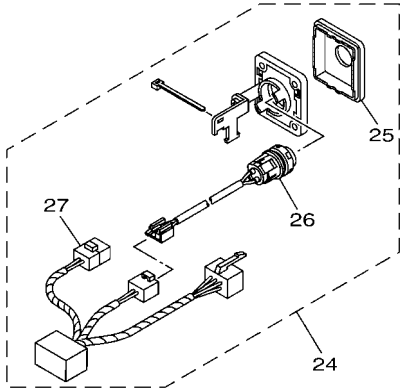

Multi engine application (All engine start/stop)

601R10R-S460

FIG. 46 ELECTRICAL DBW REMO-CON 1

REF. NO.	PART NO.	DESCRIPTION	601R					REMARKS
1	6X6–82580–A0	WIRE HARNESS ASSY 2	1					AP SINGLE
2	6X6–82585–20	.CAP 2 (2P)	1					
3	6X6–82582–60	.CAP 1 (6P)	1					
4	6X6–82582–40	.CAP 1 (4P)	1					
5	6X6–82582–A0	.CAP 1 (3P)	1					
6	6X6–82582–C0	.CAP 1 (12P)	1					
7	6X6–82585–60	.CAP 2 (6P)	1					
8	6X6–8257Y–70	.CAP 2 (6P)	1					
9	6Y8–82582–11	.CAP 1 (4PIN)	1					
10	6X6–82585–00	.CAP 2	1					
11	703–82119–00	.COVER, LEAD WIRE	1					
12	6X6–82580–B0	WIRE HARNESS ASSY 2	1					AP TWIN
13	6X6–82585–20	.CAP 2 (2P)	2					
14	6X6–82582–60	.CAP 1 (6P)	2					
15	6X6–82582–40	.CAP 1 (4P)	2					
16	6X6–82582–A0	.CAP 1 (3P)	2					
17	6X6–82582–C0	.CAP 1 (12P)	2					
18	6X6–82585–70	.CAP 2 (6P)	1					
19	6X6–8257Y–70	.CAP 2 (6P)	1					
20	6Y8–82582–11	.CAP 1 (4PIN)	2					
21	6X6–82585–00	.CAP 2	2					
22	703–82119–00	.COVER, LEAD WIRE	2					
23	703–82591–00	BAND	4					AP SINGLE
	703–82591–00	BAND	8					AP TWIN
24	6X6–82570–D0	PANEL SWITCH ASSY	1					AP TWIN,TRIPLE
25	6X6–82571–60	.PANEL, SWITCH	1					
26	6X6–8259E–20	.SWITCH ASSY	1					

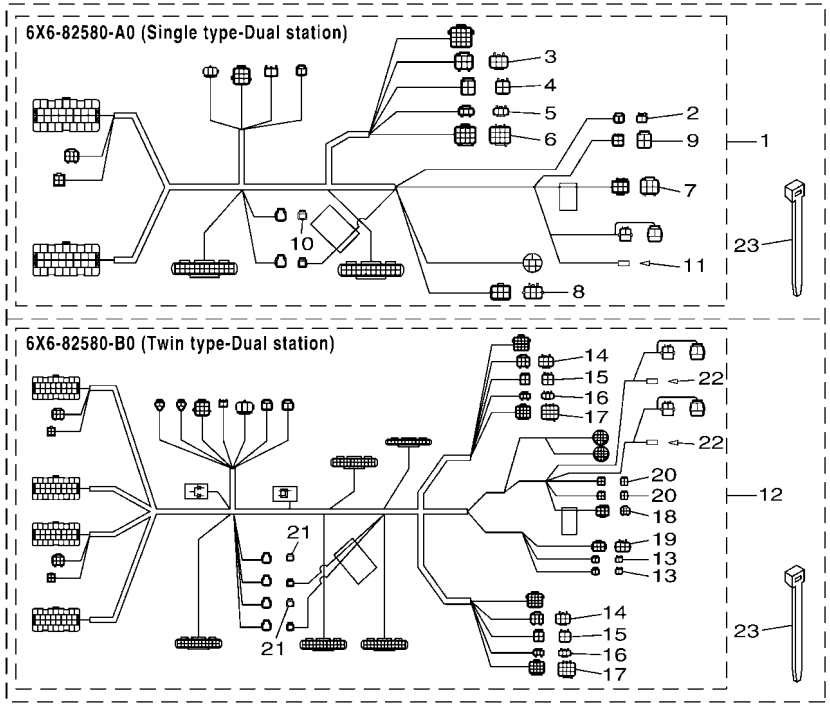

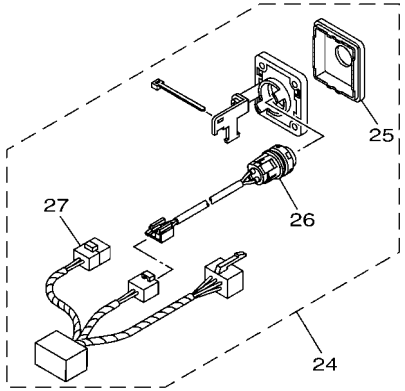

Multi engine application (All engine start/stop)

601R10R-S460

FIG. 46 ELECTRICAL DBW REMO-CON 1

REF. NO.	PART NO.	DESCRIPTION	601R					REMARKS
27	6X6–81980–40	.DIODE ASSY	1					

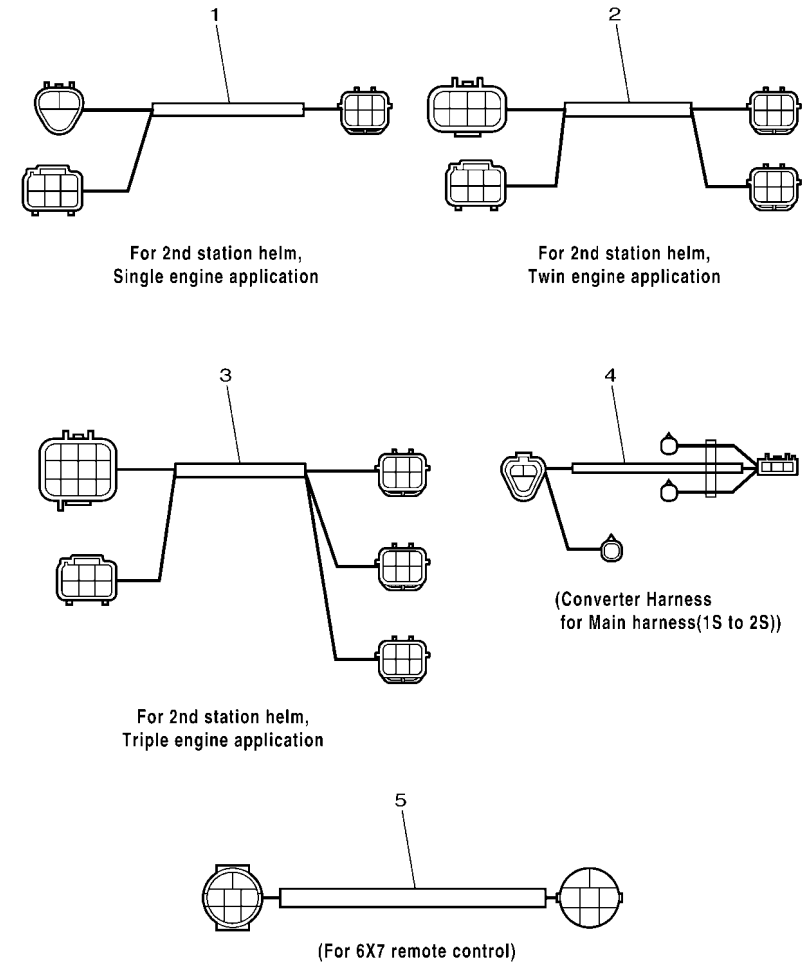

601R10R-P460

FIG. 47 ELECTRICAL DBW REMO-CON 2

REF. NO.	PART NO.	DESCRIPTION	601R					REMARKS
1	6X6–8258A–M0	EXTENSION, WIRE HARNESS	1					AP SINGLE SUB
2	6X6–8258A–N0	EXTENSION, WIRE HARNESS	1					AP TWIN SUB
3	6X6–8258A–P0	EXTENSION, WIRE HARNESS	1					AP TRIPLE SUB
4	6X6–8258A–K0	EXTENSION, WIRE HARNESS	1					AP SINGLE
	6X6–8258A–K0	EXTENSION, WIRE HARNESS	2					AP TWIN
	6X6–8258A–K0	EXTENSION, WIRE HARNESS	3					AP TRIPLE
5	6X7–82590–30	WIRE HARNESS ASSY	1					AP 6X7 RC

Part No.	Applicable model	Remarks
655-48501-02	E8D/EK8D	Rope type
655-48501-10	E8D/EK8D	Ball post type

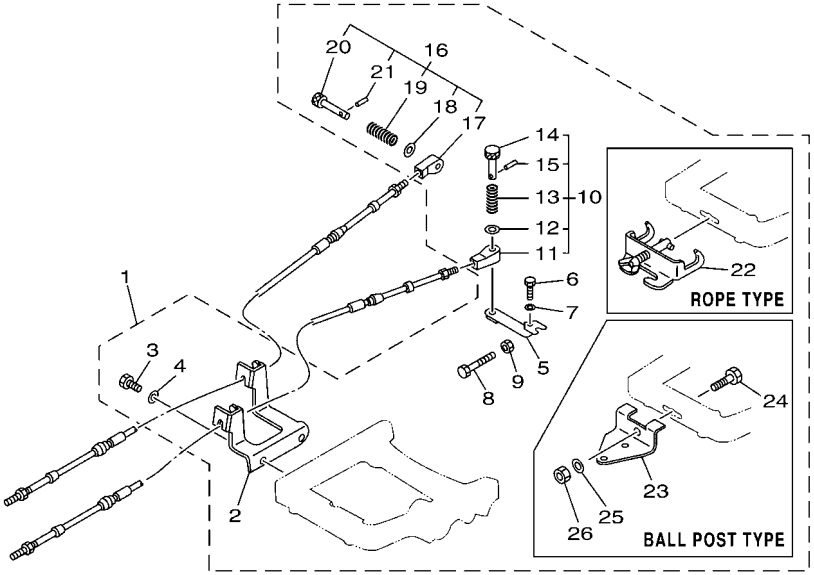

6011100-G370

FIG. 48 REMO CON ATTACHMENT 1

REF. NO.	PART NO.	DESCRIPTION	601R					REMARKS
1	655–48501–02	REMOTE CONT. ATTACHMENT ASSY.	1					UR ROPE TYPE
	655–48501–10	REMOTE CONT. ATTACHMENT ASSY.	1					UR BALL POST TYPE
2	655–48531–51	.BRACKET, REMOTE CONTROL 1	1					
3	97095–06018	.BOLT	2					
4	92995–06600	.WASHER	2					
5	647–48534–50	.THROTTLE LEVER, CONTROL	1					
6	97095–05020	.BOLT	1					
7	92995–05600	.WASHER	1					
8	97090–06045	.BOLT	1					
9	95380–06600	.NUT, HEXAGON	1					
10	647–48330–50	.CABLE END ASSY	1					
11	617–48346–90	..CABLE END, REMOTE CONTROL	1					
12	92990–08600	..WASHER, PLATE	1					
13	90501–10071	..SPRING, COMPRESSION	1					
14	617–48331–91	..HOOK, CABLE	1					
15	91690–30012	..PIN, SPRING	1					
16	647–48340–50	.CABLE END ASSY	1					
17	647–48346–50	..CABLE END, REMOTE CONTROL	1					
18	92990–08600	..WASHER, PLATE	1					
19	90501–10264	..SPRING, COMPRESSION	1					
20	617–48361–91	..HOOK, CABLE	1					
21	91690–30012	..PIN, SPRING	1					
22	700–48510–12	.STEERING HOOK ASSY	1					UR ROPE TYPE
23	676–48511–10	.HOOK, STEERING	1					UR BALL POST TYPE
24	97075–10040	.BOLT	1					
25	92990–10600	.WASHER, PLATE	1					
26	90185–10027	.NUT, SELF-LOCKING	1					

Part No.	Applicable model
63V-48501-00	9.9F, 9.9G, 15F

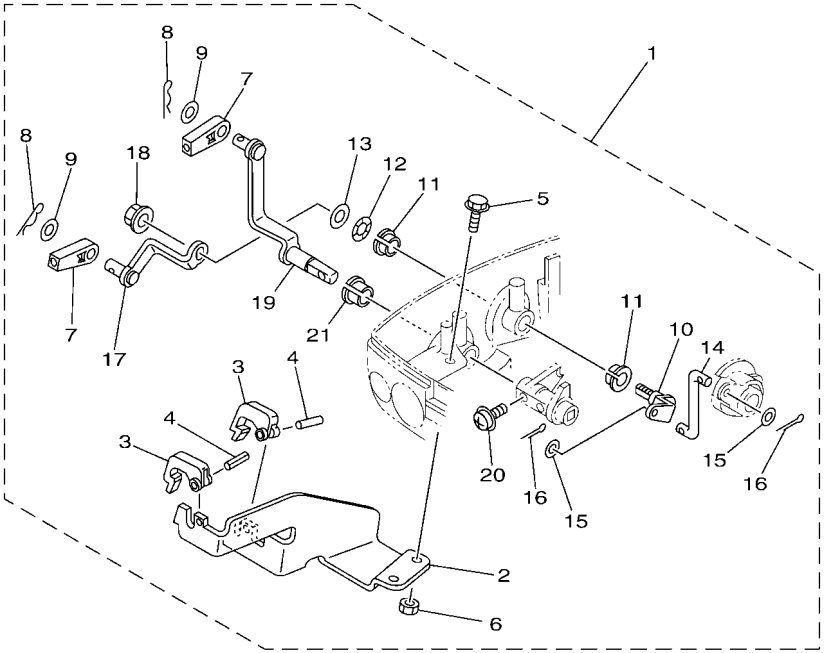

601R10R-S490

FIG. 49 REMO CON ATTACHMENT 2

REF. NO.	PART NO.	DESCRIPTION	601R					REMARKS
1	63V–48501–00	REMOTE CONT. ATTACHMENT ASSY.	1					
2	63V–48531–00	.BRACKET, REMOTE CONTROL 1	1					
3	682–48538–50	.CLAMP, CABLE 1	2					
4	91690–30012	.PIN, SPRING	2					
5	97595–06516	.BOLT, WITH WASHER	2					
6	95380–06600	.NUT, HEXAGON	2					
7	6FM–48344–00	.CABLE END, REMOTE CONTROL	2					
8	90468–18008	.CLIP	2					
9	90201–08M12	.WASHER, PLATE	2					
10	63V–42154–00	.LEVER, THROTTLE CONTROL	1					
11	90386–10025	.BUSH	2					
12	90206–10M04	.WASHER, WAVE	1					
13	90201–10M02	.WASHER, PLATE	1					
14	63V–42192–00	.ROD 2	1					
15	90201–04M06	.WASHER, PLATE	2					
16	91490–20010	.PIN. COTTER	2					
17	63V–48534–00	.THROTTLE LEVER, CONTROL	1					
18	95780–08300	.NUT, FLANGE	1					
19	63V–48544–00	.LEVER, SHIFTCONTROL	1					
20	90159–05M25	.SCREW, WITH WASHER	1					
21	90386–10009	.BUSH	1					

Part No.	Applicable model	Remarks
69R-48501-10	25B, 25X, 30H E25B, E30H	Rope type
69R-48501-00		Ball post/ Steering guide type

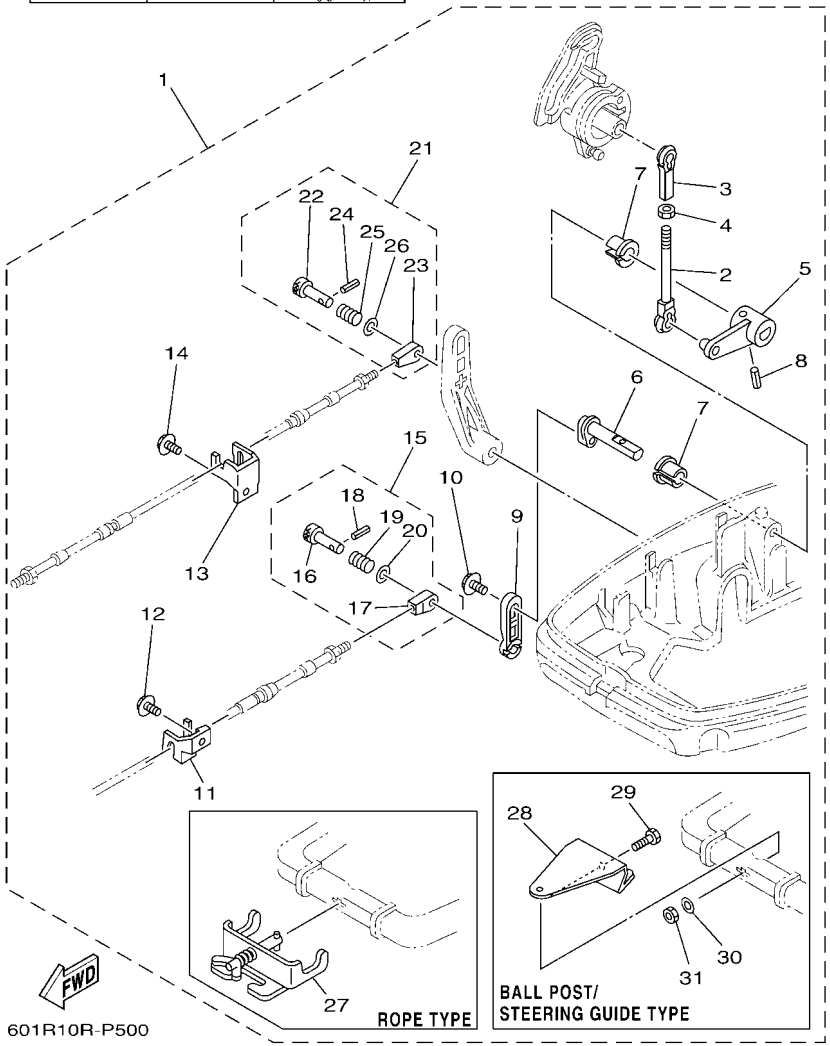

FIG. 50 REMO CON ATTACHMENT 3

REF. NO.	PART NO.	DESCRIPTION	601R					REMARKS
1	69R–48501–10	REMOTE CONT. ATTACHMENT ASSY.	1					UR ROPE TYPE
	69R–48501–00	REMOTE CONT. ATTACHMENT ASSY.	1					UR
2	682–41238–01	.JOINT, LINK	1					
3	682–41237–00	.JOINT, LINK	1					
4	95380–05600	.NUT	1					
5	69S–42157–10	.LEVER, THROTTLE	1					
6	656–42153–10–4D	.SHAFT, THROTTLE CONTROL	1					
7	90386–10009	.BUSH	2					
8	91690–40018	.PIN, SPRING	1					
9	648–48534–50–4D	.THROTTLE LEVER, CONTROL	1					
10	97595–06512	.BOLT, WITH WASHER	1					
11	689–48532–51	.BRACKET, REMOTE CONTROL 2	1					
12	97595–06516	.BOLT, WITH WASHER	1					
13	689–48531–51	.BRACKET, REMOTE CONTROL 1	1					
14	97595–06516	.BOLT, WITH WASHER	1					
15	648–48340–50	.CABLE END ASSY	1					
16	617–48361–91	..HOOK, CABLE	1					
17	617–48346–90	..CABLE END, REMOTE CONTROL	1					
18	91690–30012	..PIN, SPRING	1					
19	90501–10264	..SPRING, COMPRESSION	1					
20	92990–08600	..WASHER, PLATE	1					
21	648–48330–50	.CABLE END ASSY	1					
22	617–48331–91	..HOOK, CABLE	1					
23	648–48346–50	..CABLE END, REMOTE CONTROL	1					
24	91690–30012	..PIN, SPRING	1					
25	90501–10071	..SPRING, COMPRESSION	1					
26	92990–08600	..WASHER, PLATE	1					

Part No.	Applicable model	Remarks
69R-48501-10	25B, 25X, 30H E25B, E30H	Rope type
69R-48501-00		Ball post/ Steering guide type

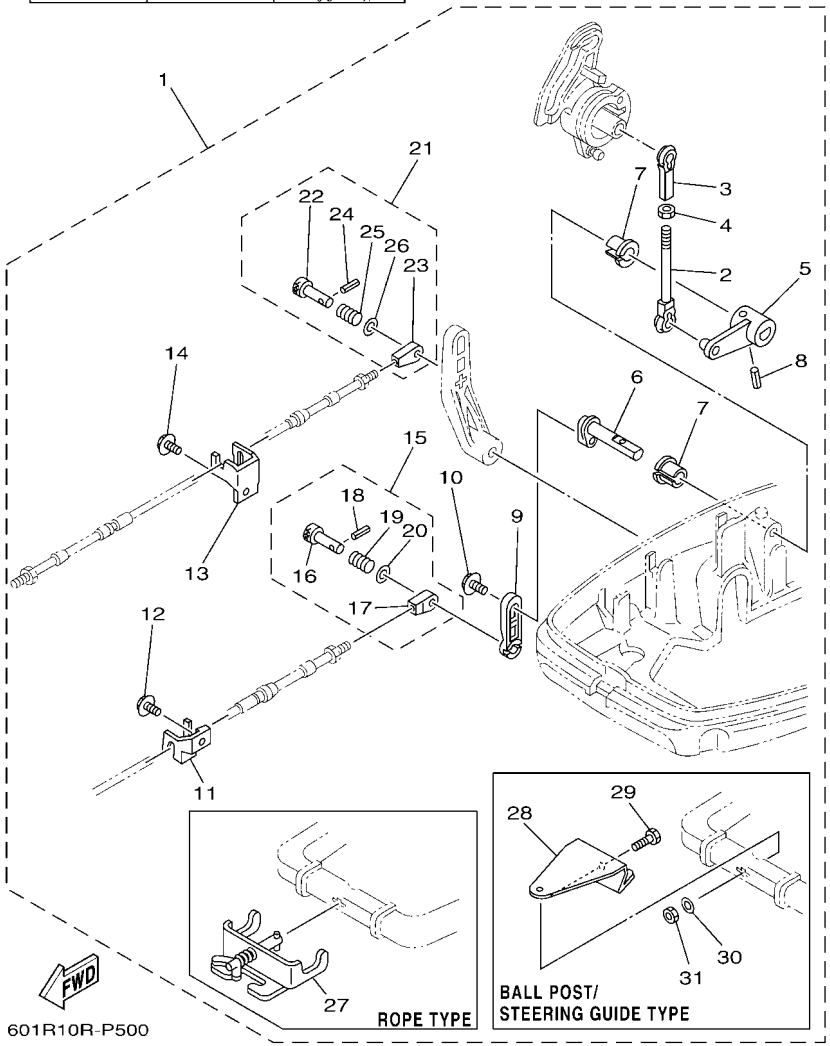

FIG. 50 REMO CON ATTACHMENT 3

REF. NO.	PART NO.	DESCRIPTION	601R					REMARKS
27	700–48510–12	.STEERING HOOK ASSY	1					ROPE TYPE
28	689–48511–02	.HOOK, STEERING	1					
29	97075–10040	.BOLT	1					
30	92995–10600	.WASHER	1					
31	90185–10027	.NUT, SELF-LOCKING	1					

Part No.	Applicable model
66T-48501-01	40A, 40X, E40X

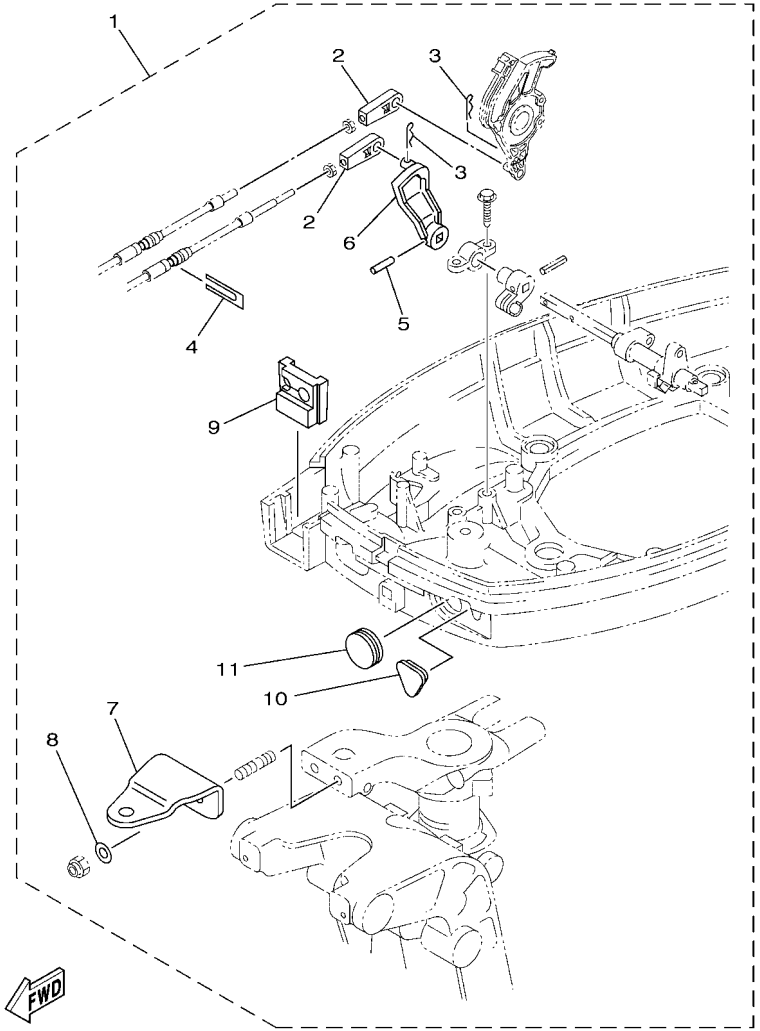

601R10R-S510

FIG. 51 REMO CON ATTACHMENT 4

REF. NO.	PART NO.	DESCRIPTION	601R					REMARKS
1	66T–48501–01	REMOTE CONT. ATTACHMENT ASSY.	1					
2	6FM–48344–00	.CABLE END, REMOTE CONTROL	2					
3	90468–18008	.CLIP	2					
4	6H3–48538–00	.CLAMP, CABLE 1	1					
5	90254–03M05	.PIN, SPRING	1					
6	66T–44125–01	.LEVER, SHIFT ROD	1					
7	65W–48511–01	.HOOK, STEERING	1					
8	90201–10120	.WASHER, PLATE	2					
9	66T–42725–30	.GROMMET	1					
10	65W–26326–10	.GROMMET	1					
11	65W–42726–10	.GROMMET	1					

Part No.	Applicable model
6DR-48501-01	F8F(F8B), FT8G, F9.9J(F9.9B), FT9.9L(T9.9B)

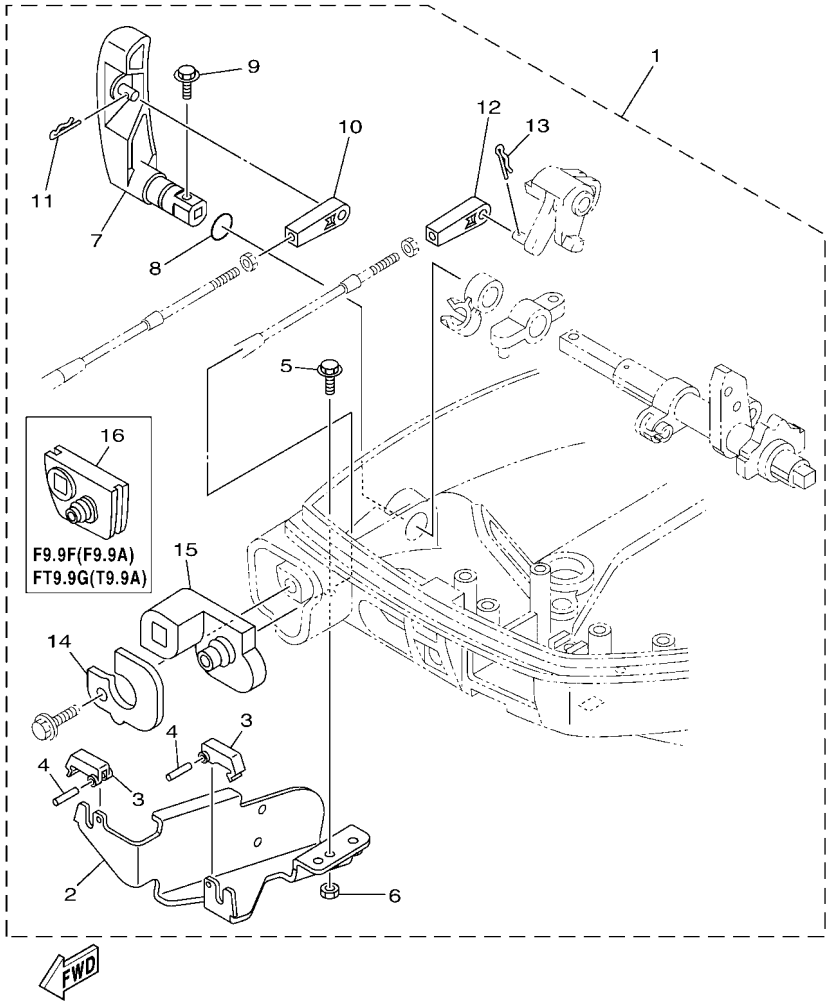

601R10R-R500

FIG. 52 REMO CON ATTACHMENT 5

REF. NO.	PART NO.	DESCRIPTION	601R					REMARKS
1	6DR–48501–01	REMOTE CONT. ATTACHMENT ASSY.	1					
2	68T–48531–01	.BRACKET, REMOTE CONTROL 1	1					
3	682–48538–50	.CLAMP, CABLE 1	2					
4	91690–30012	.PIN, SPRING	2					
5	97595–06512	.BOLT, WITH WASHER	2					
6	95380–06600	.NUT, HEXAGON	2					
7	6AU–44111–10	.HANDLE, GEAR SHIFT	1					
8	93210–12327	.O-RING	1					
9	97595–05516	.BOLT, WITH WASHER	1					
10	6FM–48344–00	.CABLE END, REMOTE CONTROL	1					
11	90468–18008	.CLIP	1					
12	6FM–48344–00	.CABLE END, REMOTE CONTROL	1					
13	90468–18008	.CLIP	1					
14	6DR–42761–10	.STOPPER	1					
15	6DR–42725–10	.GROMMET	1					
16	68T–42725–10	.GROMMET	1					

Part No.	Applicable model
6AH-48501-00	F15C, F20B

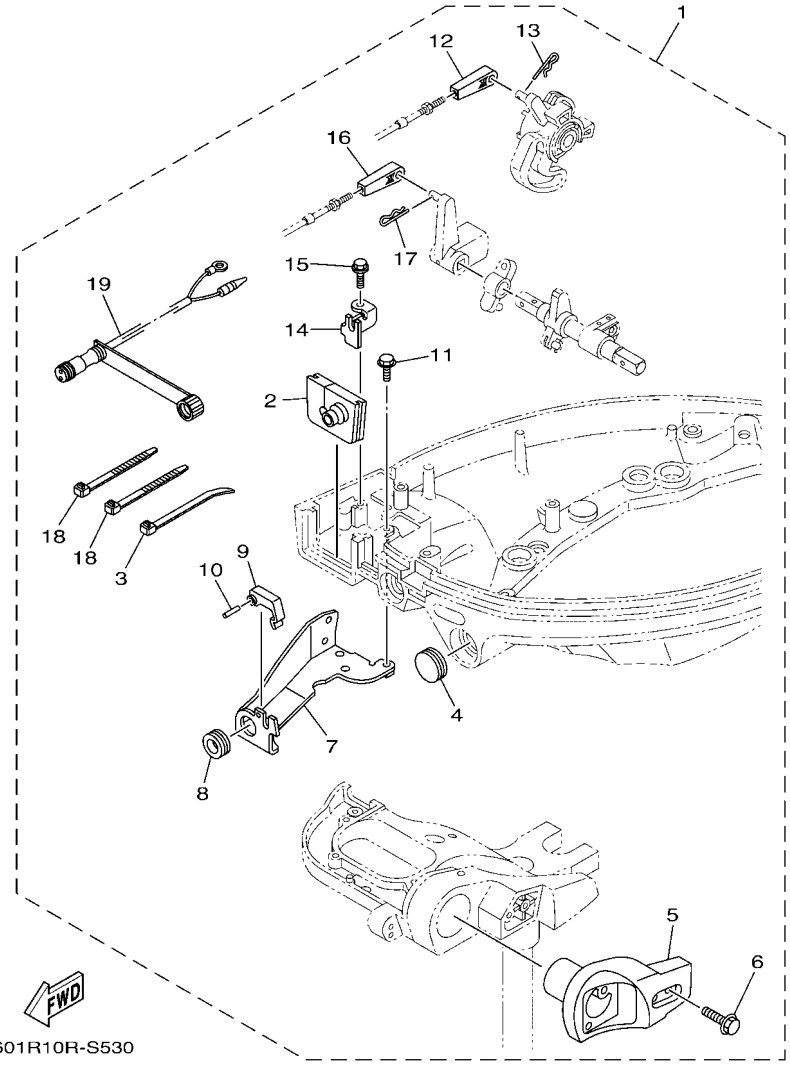

601R10R-S530

FIG. 53 REMO CON ATTACHMENT 6

REF. NO.	PART NO.	DESCRIPTION	601R					REMARKS
1	6AH–48501–00	REMOTE CONT. ATTACHMENT ASSY.	1					
2	6AH–42724–10	.GROMMET	1					
3	90465–11M10	.CLAMP	1					
4	65W–42726–10	.GROMMET	1					
5	6AH–83773–00	.BRACKET, SWITCH	1					
6	97595–06530	.BOLT, WITH WASHER	2					
7	6AH–48532–00	.BRACKET, REMOTE CONTROL 2	1					
8	90480–19031	.GROMMET	1					
9	682–48538–50	.CLAMP, CABLE 1	1					
10	91690–30012	.PIN, SPRING	1					
11	97595–06514	.BOLT, WITH WASHER	2					
12	6FM–48344–00	.CABLE END, REMOTE CONTROL	1					
13	90468–18008	.CLIP	1					
14	6AH–48531–00	.BRACKET, REMOTE CONTROL 1	1					
15	90109–06M86	.BOLT	1					
16	6FM–48344–00	.CABLE END, REMOTE CONTROL	1					
17	90468–18008	.CLIP	1					
18	90465–13M18	.CLAMP	2					
19	6D5–84340–00	.SOCKET CORD ASSY 1	1					

Part No.	Applicable model
6BL-48501-00	F25D (F25A, F25B)

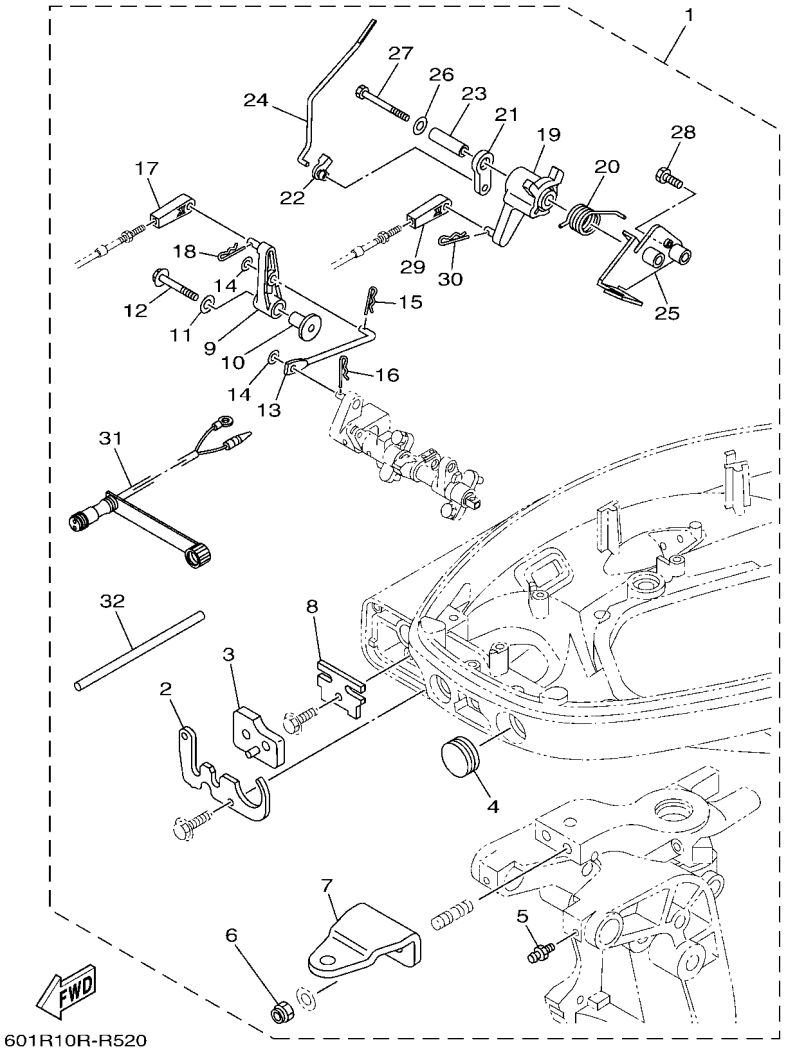

601R10R-R520

FIG. 54 REMO CON ATTACHMENT 7

REF. NO.	PART NO.	DESCRIPTION	601R					REMARKS
1	6BL–48501–00	REMOTE CONT. ATTACHMENT ASSY.	1					
2	6BL–42761–00	.STOPPER	1					
3	6BL–42727–00	.GROMMET	1					
4	65W–42726–10	.GROMMET	1					
5	93700–06M03	.NIPPLE, GREASE	2					
6	90185–10027	.NUT, SELF-LOCKING	2					
7	65W–48511–01	.HOOK, STEERING	1					
8	6BL–48538–00	.CLAMP, CABLE 1	1					
9	6BL–44125–00	.LEVER, SHIFT ROD	1					
10	90387–06M86	.COLLAR	1					
11	90201–06M31	.WASHER, PLATE	1					
12	97595–06535	.BOLT, WITH WASHER	1					
13	6BL–44192–00	.LINK, SHIFT ROD	1					
14	90201–05M06	.WASHER, PLATE	2					
15	90468–10005	.CLIP	1					
16	90468–18001	.CLIP	1					
17	6FM–48344–00	.CABLE END, REMOTE CONTROL	1					
18	90468–18008	.CLIP	1					
19	6BL–41638–00	.PULLEY	1					
20	90508–20040	.SPRING, TORSION	1					
21	65W–41283–00	.LEVER, FREE ACCEL.	1					
22	6J8–41262–00	.JOINT, CHOKE LEVER	1					
23	90387–06139	.COLLAR	1					
24	6BL–41211–00	.LINK, ACCEL.	1					
25	6BL–14571–10	.BRACKET, THROTTLE	1					
26	90201–06M31	.WASHER, PLATE	1					
27	97095–06065	.BOLT	1					

Part No.	Applicable model
6BL-48501-00	F25D (F25A, F25B)

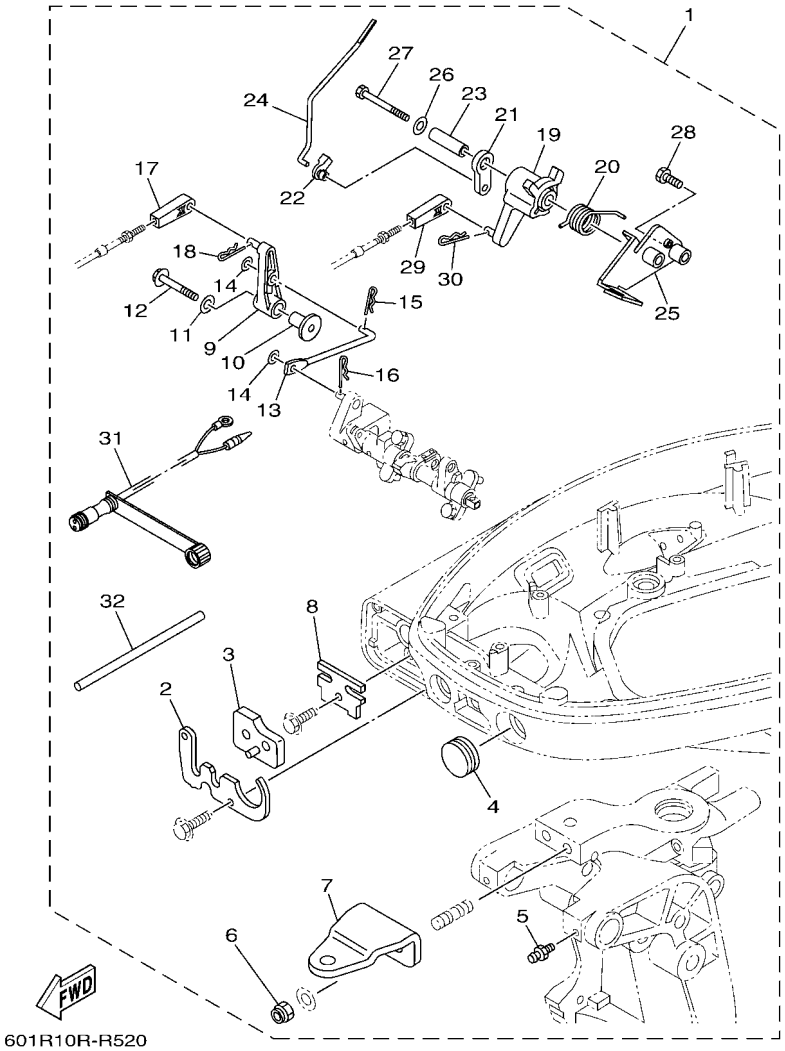

601R10R-R520

FIG. 54 REMO CON ATTACHMENT 7

REF. NO.	PART NO.	DESCRIPTION	601R					REMARKS
28	97095–06025	.BOLT	1					
29	6FM–48344–00	.CABLE END, REMOTE CONTROL	1					
30	90468–18008	.CLIP	1					
31	6D5–84340–00	.SOCKET CORD ASSY 1	1					
32	90446–09M42	.HOSE (L160)	2					

Part No.	Applicable model
6FM-48501-00	F25G (F25C)

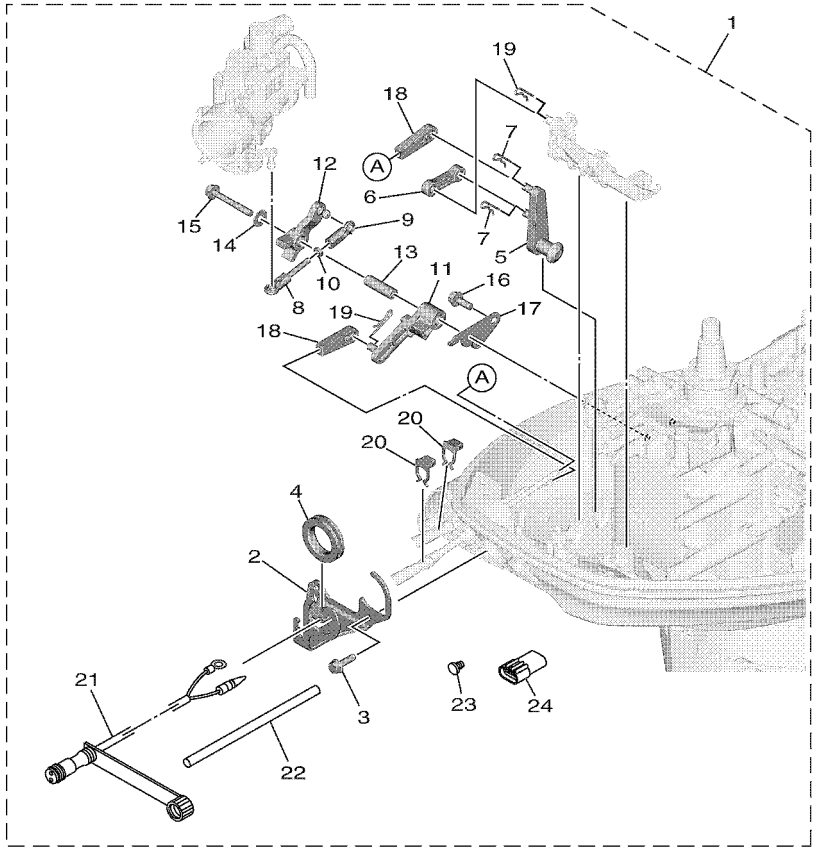

601R10RDR530

FIG. 55 REMO CON ATTACHMENT 8

REF. NO.	PART NO.	DESCRIPTION	601R					REMARKS
1	6FM–48501–00	REMOTE CONT. ATTACHMENT ASSY.	1					
2	6FM–42761–10	.STOPPER	1					
3	90109–06316	.BOLT	2					
4	6FM–42726–10	.GROMMET	1					
5	6FM–44125–00	.LEVER, SHIFT ROD	1					
6	6FM–44192–00	.LINK, SHIFT ROD	1					
7	90468–18008	.CLIP	2					
8	682–41237–50	.JOINT, LINK	1					
9	6H4–41237–00	.JOINT, LINK	1					
10	95380–05700	.NUT	1					
11	6FM–42157–00	.LEVER, THROTTLE	1					
12	6FM–41283–00	.LEVER, FREE ACCEL.	1					
13	90387–06M59	.COLLAR	1					
14	90201–06M62	.WASHER, PLATE	1					
15	95895–06045	.BOLT, FLANGE	1					
16	95895–06016	.BOLT, FLANGE	1					
17	6FM–14571–00	.BRACKET, THROTTLE	1					
18	6FM–48344–00	.CABLE END, REMOTE CONTROL	2					
19	90468–18008	.CLIP	2					
20	63D–48538–00	.CLAMP, CABLE 1	2					
21	6D5–84340–00	.SOCKET CORD ASSY 1	1					
22	90446–09M42	.HOSE (L160)	1					
23	703–82119–00	.COVER, LEAD WIRE	1					
24	6FM–82582–00	.CAP 1 (3P)	1					

STEERING HOOK

Part No.	Applicable model	Remarks
676-48511-02	E40J	Steering guide type

Part No.	Applicable model	Remarks
63D-48511-01	40V, 50H FT50C, F50D	Steering guide type

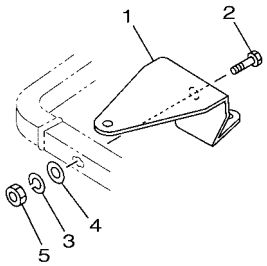

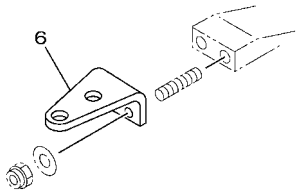

Part No.	Applicable model	Remarks
688-48511-12	E75B, 90A, 85A	Steering guide type

Part No.	Applicable model	Remarks
63V-48511-01	F8F (F8B), FT8G F9.9J (F9.9B) FT9.9L (T9.9B) 9.9F, F9.9G, 15F	Steering guide type

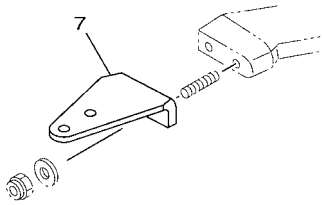

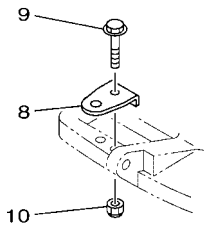

601R10R-S560

FIG. 56 STEERING HOOK 1

REF. NO.	PART NO.	DESCRIPTION	601R					REMARKS
1	676–48511–02	HOOK, STEERING	1					STEERING GUIDE
2	97075–10040	BOLT	1					
3	92990–10100	WASHER, SPRING	1					
4	92990–10600	WASHER, PLATE	1					
5	95380–10600	NUT	1					
6	63D–48511–01	HOOK, STEERING	1					STEERING GUIDE
7	688–48511–12	HOOK, STEERING	1					STEERING GUIDE
8	63V–48511–01	HOOK, STEERING	1					STEERING GUIDE
9	97575–08535	BOLT, WITH WASHER	1					
10	90185–08057	NUT, SELF-LOCKING	1					

STEERING HOOK

Part No.	Applicable model	Remarks
6AH-48511-01	F9.9H, F15C(F15A) F20B (F20A) , F20C	Steering guide type

Part No.	Applicable model	Remarks
65W-48511-01	F20F F25D (F25A) F25G(F25C) FT25F(T25A) F30B (F30A), F40F (F40A) (E) 40X, F40G F50H (F50B), FT50J (T50B) F60F (F60B), FT60G (T60B) F40H, F70A (F70A)	Steering guide type

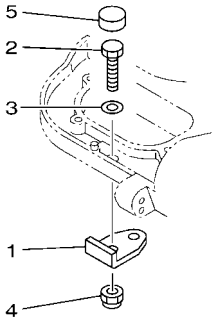

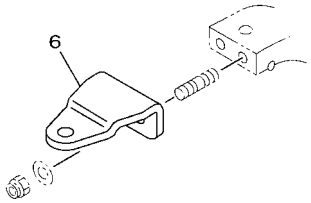

Part No.	Applicable model	Remarks
67F-48511-01	F80B F90B F100D	Steering guide type

Part No.	Applicable model	Remarks
68V-48511-01	F75C, F100B	Steering guide type

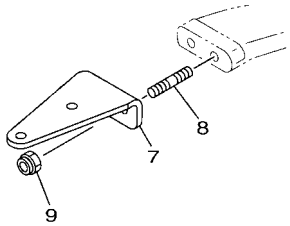

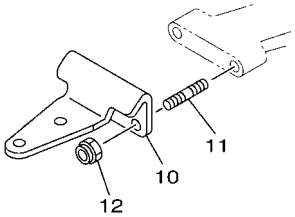

601R10R-S570

FIG. 57 STEERING HOOK 2

REF. NO.	PART NO.	DESCRIPTION	601R					REMARKS
1	6AH–48511–01	HOOK, STEERING	1					STEERING GUIDE
2	97095–08025	BOLT	1					
3	92995–08600	WASHER	1					
4	90185–08057	NUT, SELF-LOCKING	1					
5	6AH–44194–00	CAP	1					
6	65W–48511–01	HOOK, STEERING	1					STEERING GUIDE
7	67F–48511–01	HOOK, STEERING	1					STEERING GUIDE
8	90116–10062	BOLT, STUD	2					
9	90185–10027	NUT, SELF-LOCKING	2					
10	68V–48511–01	HOOK, STEERING	1					STEERING GUIDE
11	90116–10062	BOLT, STUD	2					
12	90185–10027	NUT, SELF-LOCKING	2					

STEERING HOOK

Part No.	Applicable model	Remarks
676-48511-10	E8D, EK8D	Ball post type

Part No.	Applicable model	Remarks
689-48511-02	25B, 25X, 30H E25B, E30H	Ball post type/ Steering guide type

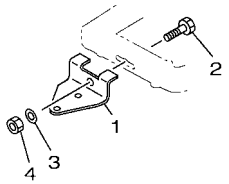

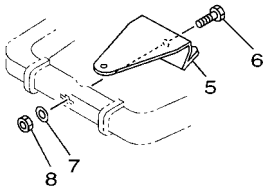

Part No.	Applicable model	Remarks
700-48510-12	E8D, EK8D 25B, 25X, 30H E25B, E30H	Rope type

Part No.	Applicable model	Remarks
69G-48511-10	FT9.9L (T9.9B)	For Linkage to main-engine

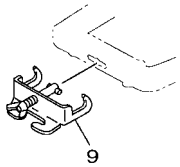

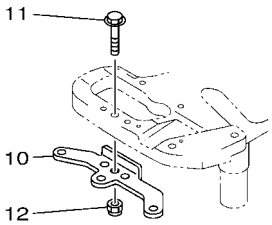

601R10R-R560

FIG. 58 STEERING HOOK 3

REF. NO.	PART NO.	DESCRIPTION	601R					REMARKS
1	676–48511–10	HOOK, STEERING	1					BALL POST TYPE
2	97075–10040	BOLT	1					
3	92990–10600	WASHER, PLATE	1					
4	90185–10027	NUT, SELF-LOCKING	1					
5	689–48511–02	HOOK, STEERING	1					
6	97075–10040	BOLT	1					
7	92990–10600	WASHER, PLATE	1					
8	90185–10027	NUT, SELF-LOCKING	1					
9	700–48510–12	STEERING HOOK ASSY	1					ROPE TYPE
10	69G–48511–10	HOOK, STEERING	1					
11	97575–08535	BOLT, WITH WASHER	1					
12	90185–08057	NUT, SELF-LOCKING	1					

Part No.	Applicable model
68T-61350-10	F8F (F8B), FT8G F9.9J (F9.9B), FT9.9L (T9.9B)

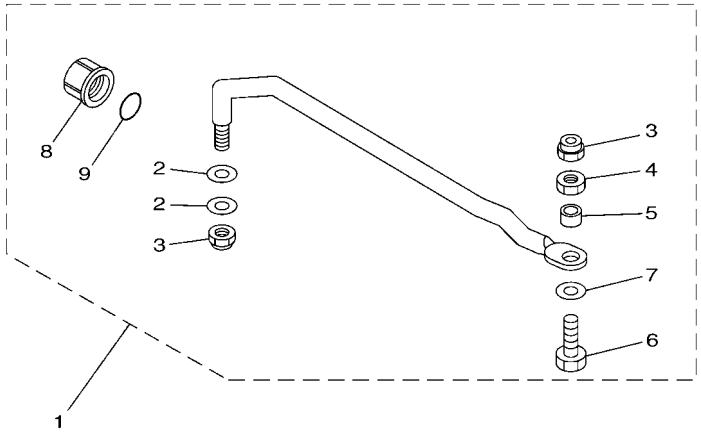

601R10R-P600

FIG. 59 STEERING GUIDE 1

REF. NO.	PART NO.	DESCRIPTION	601R					REMARKS
1	68T–61350–10	STEERING GUIDE ATTACHMENT KIT	1					
2	90201–10M20	.WASHER, PLATE	2					
3	90185–09M01	.NUT, SELF-LOCKING	2					
4	90170–09M03	.NUT	1					
5	90387–10M42	.COLLAR	1					
6	6E5–61355–00	.BOLT	1					
7	90201–10M63	.WASHER, PLATE	1					
8	6E5–43145–01	.CAP, CLAMP BRACKET	1					
9	93210–16275	.O-RING	1					

Part No.	Applicable model
6AH-61350-00	F9.9H, F15C (F15A), F20B (F20A), F20C

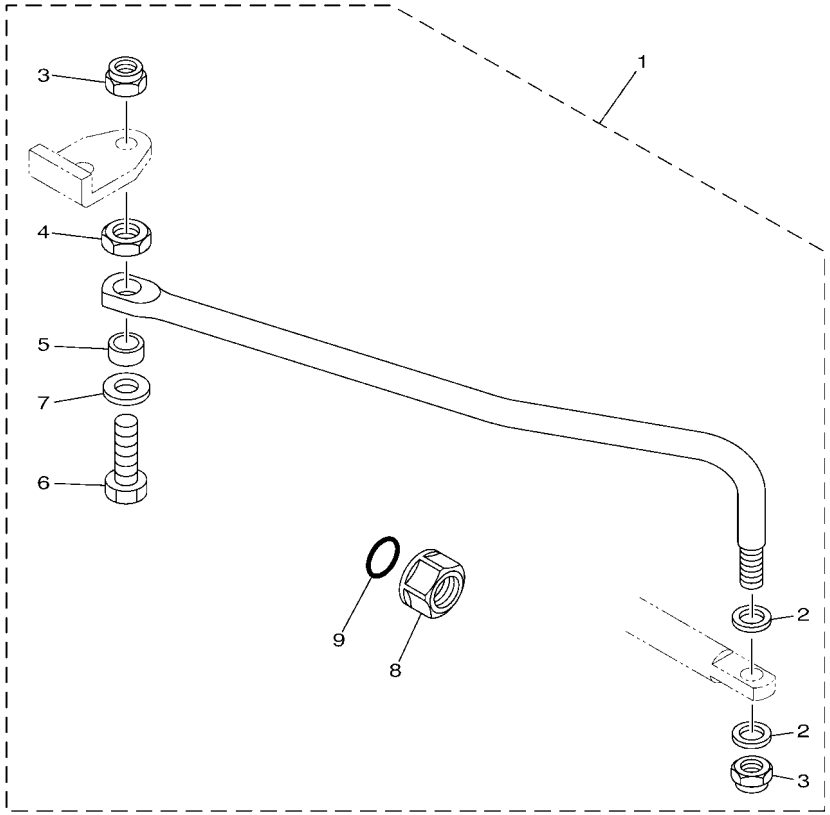

601R10R-N660

FIG. 60 STEERING GUIDE 2

REF. NO.	PART NO.	DESCRIPTION	601R					REMARKS
1	6AH–61350–00	STEERING GUIDE ATTACHMENT KIT	1					
2	90201–10M20	.WASHER, PLATE	2					
3	90185–09M01	.NUT, SELF-LOCKING	2					
4	90170–09M03	.NUT	1					
5	90387–10M42	.COLLAR	1					
6	6E5–61355–00	.BOLT	1					
7	90201–10M63	.WASHER, PLATE	1					
8	6E5–43145–01	.CAP, CLAMP BRACKET	1					
9	93210–16275	.O-RING	1					

Part No.	Applicable model
689-61350-02	25B, 30H

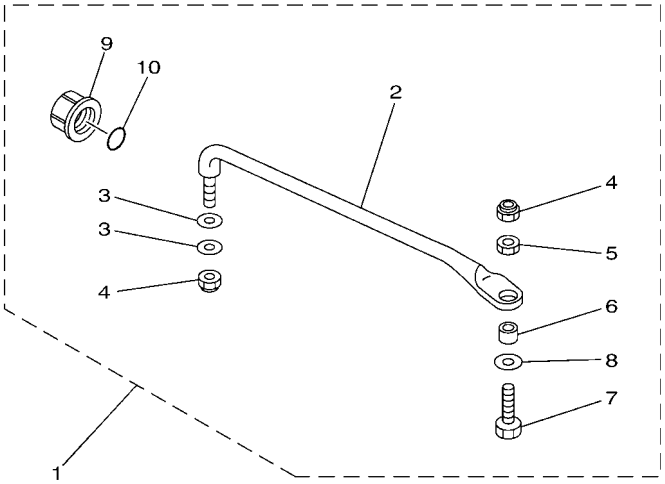

601R10R-R590

FIG. 61 STEERING GUIDE 3

REF. NO.	PART NO.	DESCRIPTION	601R					REMARKS
1	689–61350–02	STEERING GUIDE ATTACHMENT KIT	1					
2	689–61351–01	.ROD, STEERING LINK	1					
3	90201–10M20	.WASHER, PLATE	2					
4	90185–09M01	.NUT, SELF-LOCKING	2					
5	90170–09M03	.NUT	1					
6	90387–10M42	.COLLAR	1					
7	6E5–61355–00	.BOLT	1					
8	90201–10M63	.WASHER, PLATE	1					
9	6E5–43145–01	.CAP, CLAMP BRACKET	1					
10	93210–16275	.O-RING	1					

Part No.	Applicable model
63D-61350-00	40V, 50H FT50C, F50D

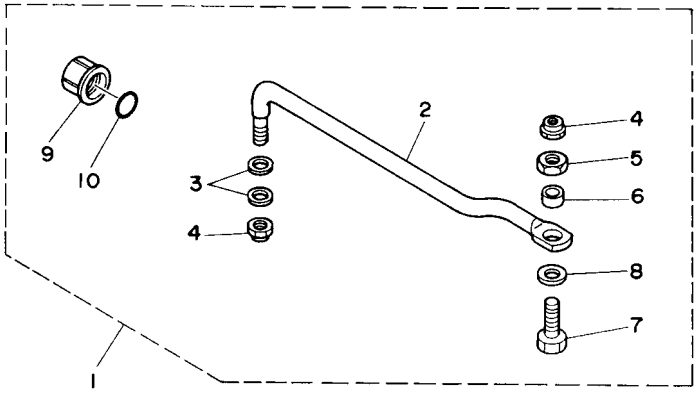

601R10R-M670

FIG. 62 STEERING GUIDE 4

REF. NO.	PART NO.	DESCRIPTION	601R					REMARKS
1	63D–61350–00	STEERING GUIDE ATTACHMENT KIT	1					
2	63D–61351–00	.ROD, STEERING LINK	1					
3	90201–10M20	.WASHER, PLATE	2					
4	90185–09M01	.NUT, SELF-LOCKING	2					
5	90170–09M03	.NUT	1					
6	90387–10M42	.COLLAR	1					
7	90101–09M01	.BOLT	1					
8	90201–10M63	.WASHER, PLATE	1					
9	6E5–43145–01	.CAP, CLAMP BRACKET	1					
10	93210–16275	.O-RING	1					

Part No.	Applicable model
65W-61350-00	40A, 40X, E40X F50H (F50B), FT50J (T50B), F40H, F40G F60F (F60B), FT60G (T60B), F70A (F70A)

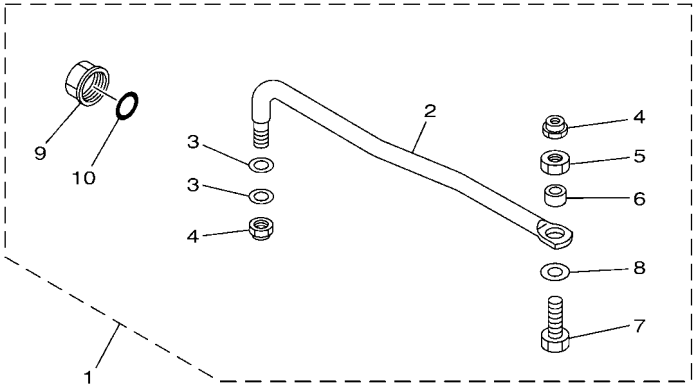

601R10R-S630

FIG. 63 STEERING GUIDE 5

REF. NO.	PART NO.	DESCRIPTION	601R					REMARKS
1	65W–61350–00	STEERING GUIDE ATTACHMENT KIT	1					
2	65W–61351–00	.ROD, STEERING LINK	1					
3	90201–10M20	.WASHER, PLATE	2					
4	90185–09M01	.NUT, SELF-LOCKING	2					
5	90170–09M03	.NUT	1					
6	90387–10M42	.COLLAR	1					
7	90101–09M01	.BOLT	1					
8	90201–10M63	.WASHER, PLATE	1					
9	6E5–43145–01	.CAP, CLAMP BRACKET	1					
10	93210–16275	.O-RING	1					

Part No.	Applicable model
697-61350-00	55B
688-61350-10	60F, 70B, 90A, 85A, E60H

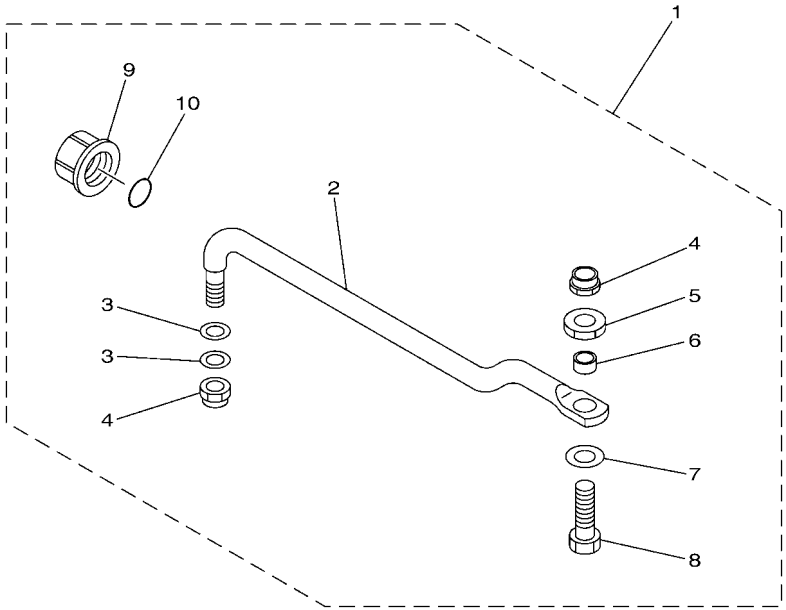

601R10R-R620

FIG. 64 STEERING GUIDE 6

REF. NO.	PART NO.	DESCRIPTION	601R					REMARKS
1	697–61350–00	STEERING GUIDE ATTACHMENT KIT	1					UR
	688–61350–10	STEERING GUIDE ATTACHMENT KIT	1					UR
2	697–61351–00	.ROD, STEERING LINK	1					FOR 697-61350-00
	688–61351–10	.ROD, STEERING LINK	1					FOR 688-61350-10
3	90201–10M20	.WASHER, PLATE	2					
4	90185–09M01	.NUT, SELF-LOCKING	2					
5	90170–09M03	.NUT	1					
6	90387–10M42	.COLLAR	1					
7	90201–10M63	.WASHER, PLATE	1					
8	6E5–61355–00	.BOLT	1					
9	6E5–43145–01	.CAP, CLAMP BRACKET	1					
10	93210–16275	.O-RING	1					

Part No.	Applicable model
67F-61350-00	F90B, F100D

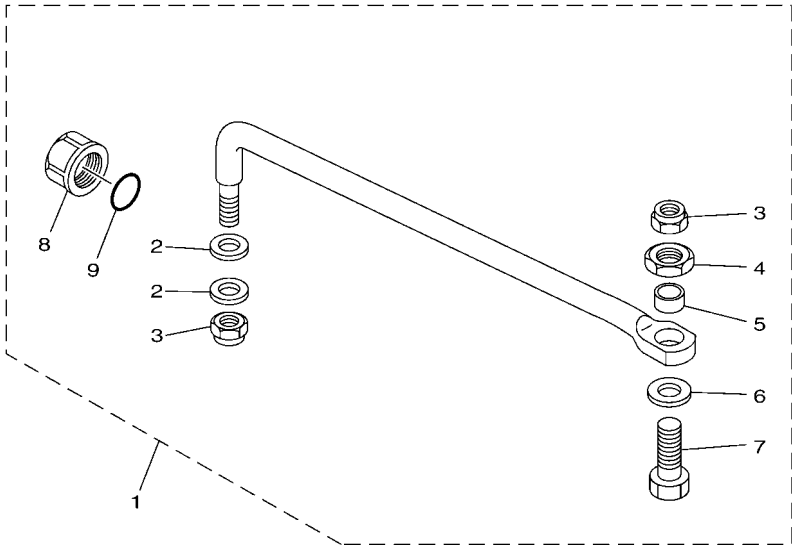

601R10R-S650

FIG. 65 STEERING GUIDE 7

REF. NO.	PART NO.	DESCRIPTION	601R					REMARKS
1	67F–61350–00	STEERING GUIDE ATTACHMENT KIT	1					
2	90201–10M20	.WASHER, PLATE	2					
3	90185–09M01	.NUT, SELF-LOCKING	2					
4	90170–09M03	.NUT	1					
5	90387–10M42	.COLLAR	1					
6	90201–10M63	.WASHER, PLATE	1					
7	90101–09M01	.BOLT	1					
8	6E5–43145–01	.CAP, CLAMP BRACKET	1					
9	93210–16275	.O-RING	1					

Part No.	Applicable model
6E5-61350-02	F75C, F100B F150A – F300 (V6), 115 and larger

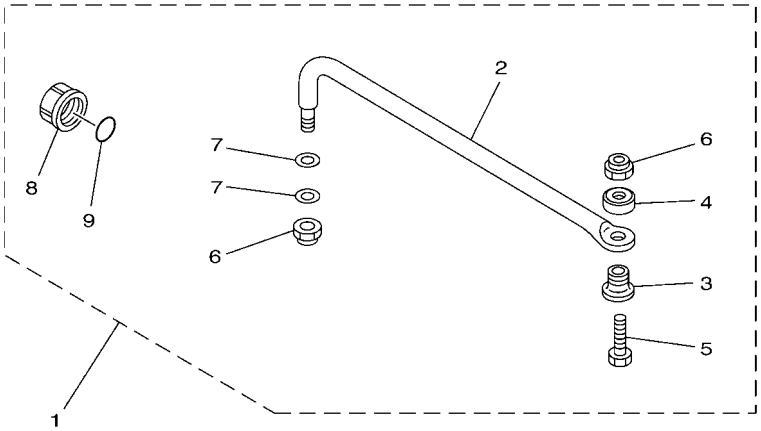

601R10R-S660

FIG. 66 STEERING GUIDE 8

REF. NO.	PART NO.	DESCRIPTION	601R					REMARKS
1	6E5–61350–02	STEERING GUIDE ATTACHMENT KIT	1					
2	6E5–61351–01	.ROD, STEERING LINK	1					
3	90387–10M61	.COLLAR	1					
4	90560–12M01	.SPACER	1					
5	6E5–61355–00	.BOLT	1					
6	90185–09M01	.NUT, SELF-LOCKING	2					
7	90201–10M20	.WASHER, PLATE	2					
8	6E5–43145–01	.CAP, CLAMP BRACKET	1					
9	93210–16275	.O-RING	1					

Part No.	Applicable model
6E5-61301-01	40 and larger, F30 – F300 (V6)

Twin engine tie-bar kit
Adjustable distance : 600 mm (23.6 in.) – 800 mm (31.5 in.)

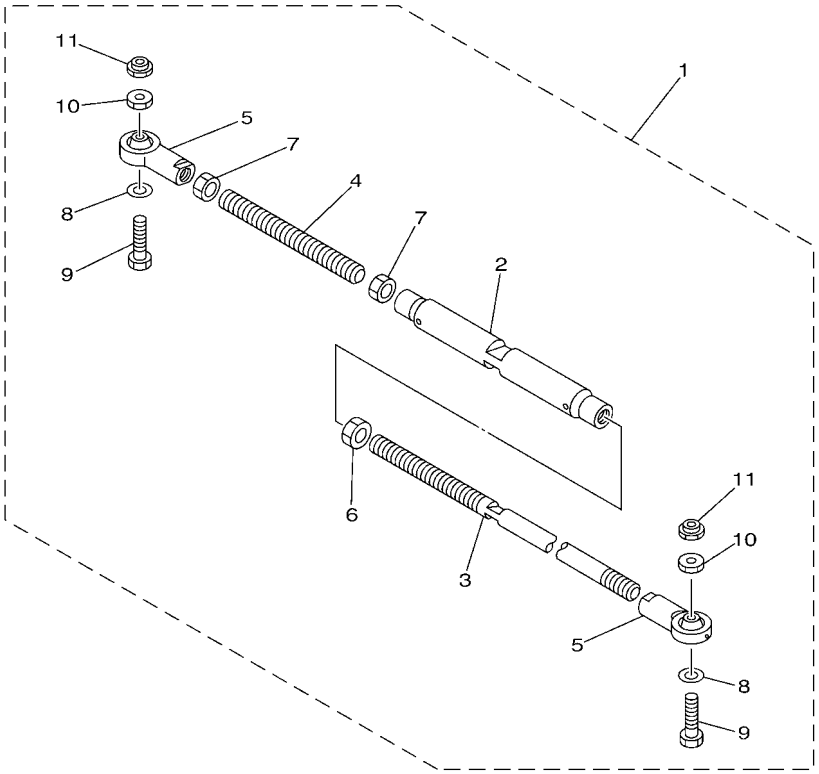

601R10R-P680

FIG. 67 STEERING GUIDE 9

REF. NO.	PART NO.	DESCRIPTION	601R					REMARKS
1	6E5–61301–01	TWIN KIT (L:600-800MM)	1					
2	6E5–61313–00	.ADJUSTER	1					
3	6E5–61311–11	.TIE BAR	1					
4	6E5–61315–00	.TIE BAR	1					
5	6E5–61303–00	.STEERING AXLE COMP.	2					
6	90170–14M06	.NUT	1					
7	95380–14700	.NUT	2					
8	90201–10M76	.WASHER, PLATE	2					
9	90101–09M70	.BOLT	2					
10	90170–09M05	.NUT	2					
11	90185–09M01	.NUT, SELF-LOCKING	2					

Part No.	Applicable model
6BG-61350-00	F25D (F25A), FT25F (T25A) F30B (F30A), F40F (F40A)

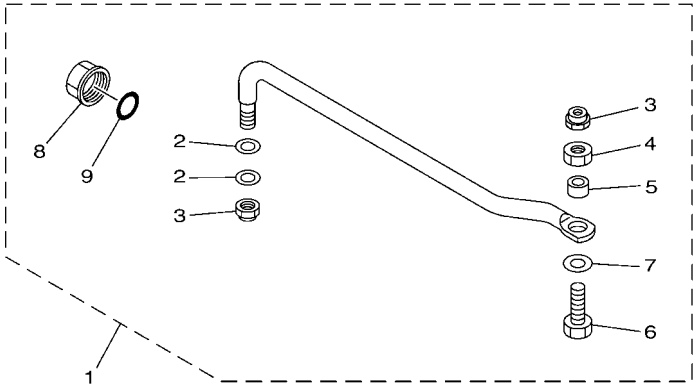

601R10R-S680

FIG. 68 STEERING GUIDE 10

REF. NO.	PART NO.	DESCRIPTION	601R					REMARKS
1	6BG–61350–00	STEERING GUIDE ATTACHMENT KIT	1					
2	90201–10M20	.WASHER, PLATE	2					
3	90185–09M01	.NUT, SELF-LOCKING	2					
4	90170–09M03	.NUT	1					
5	90387–10M42	.COLLAR	1					
6	90101–09M01	.BOLT	1					
7	90201–10M63	.WASHER, PLATE	1					
8	6E5–43145–01	.CAP, CLAMP BRACKET	1					
9	93210–16275	.O-RING	1					

Part No.	Applicable model
6EK-61350-00	F75B, F80D, F90C(F90B), VF90A, F100F F115B(F115B), VF115A, F130A(F130A)

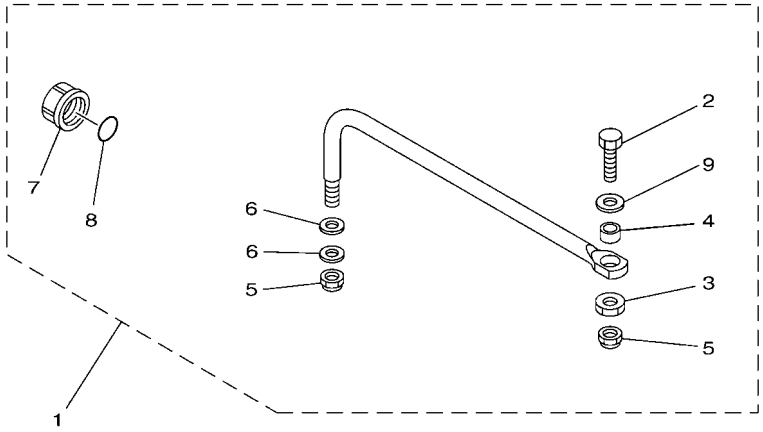

601R10R-S690

FIG. 69 STEERING GUIDE 11

REF. NO.	PART NO.	DESCRIPTION	601R					REMARKS
1	6EK–61350–00	STEERING GUIDE ATTACHMENT KIT	1					
2	6E5–61355–00	.BOLT	1					
3	90170–09M03	.NUT	1					
4	90387–10M42	.COLLAR	1					
5	90185–09M01	.NUT, SELF-LOCKING	2					
6	90201–10M20	.WASHER, PLATE	2					
7	6E5–43145–01	.CAP, CLAMP BRACKET	1					
8	93210–16275	.O-RING	1					
9	90201–10M63	.WASHER, PLATE	1					

Part No.	Applicable model
6FM-61350-00	F20F,F25G(F25C)

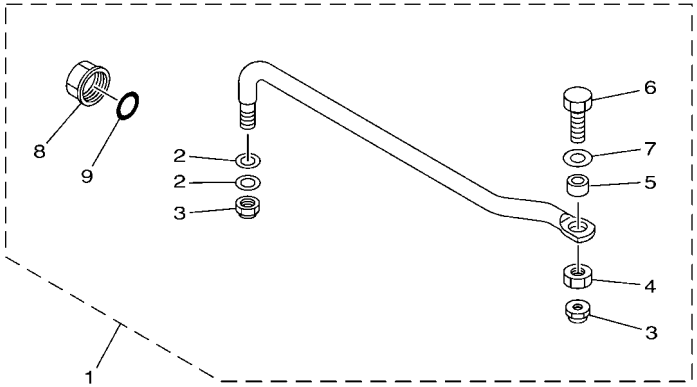

601R10R-R680

FIG. 70 STEERING GUIDE 12

REF. NO.	PART NO.	DESCRIPTION	601R					REMARKS
1	6FM–61350–00	STEERING GUIDE ATTACHMENT KIT	1					
2	90201–10M20	.WASHER, PLATE	2					
3	90185–09M01	.NUT, SELF-LOCKING	2					
4	90170–09M03	.NUT	1					
5	90387–10M42	.COLLAR	1					
6	90101–09M01	.BOLT	1					
7	90201–10M63	.WASHER, PLATE	1					
8	6E5–43145–01	.CAP, CLAMP BRACKET	1					
9	93210–16275	.O-RING	1					

PART NO.	REF. NO.
6FM–14571–00	55 – 17
6BL–14571–10	54 – 25
65W–26326–10	51 – 10
6BL–41211–00	54 – 24
682–41237–00	50 – 3
6H4–41237–00	55 – 9
682–41237–50	55 – 8
682–41238–01	50 – 2
6J8–41262–00	54 – 22
65W–41283–00	54 – 21
6FM–41283–00	55 – 12
6BL–41638–00	54 – 19
656–42153–10–4D	50 – 6
63V–42154–00	49 – 10
6FM–42157–00	55 – 11
69S–42157–10	50 – 5
63V–42192–00	49 – 14
6AH–42724–10	53 – 2
68T–42725–10	52 – 16
6DR–42725–10	52 – 15
66T–42725–30	51 – 9
65W–42726–10	51 – 11
	53 – 4
	54 – 4
6FM–42726–10	55 – 4
6BL–42727–00	54 – 3
6BL–42761–00	54 – 2
6DR–42761–10	52 – 14
6FM–42761–10	55 – 2
6X4–42821–00	11 – 53
6E5–43145–01	59 – 8
	60 – 8
	61 – 9
	62 – 9
	63 – 9
	64 – 9
	65 – 8
	66 – 8
	68 – 8
	69 – 7
	70 – 8
6AU–44111–10	52 – 7
6BL–44125–00	54 – 9
6FM–44125–00	55 – 5
66T–44125–01	51 – 6
703–44189–20	4 – 36
	5 – 36
	6 – 36

PART NO.	REF. NO.
703–44189–30	4 – 42
	5 – 42
	6 – 41
6X3–44191–00	4 – 47
	5 – 47
	6 – 46
	9 – 74
	10 – 70
6X6–44191–10	17 – 62
	18 – 69
	19 – 58
	21 – 57
6X7–44191–10	24 – 16
6BL–44192–00	54 – 13
6FM–44192–00	55 – 6
6AH–44194–00	57 – 5
6X3–48111–00	9 – 59
6X3–48111–10	10 – 57
6X0–48116–00	9 – 73
	10 – 69
6X6–48118–00	17 – 35
	18 – 41
	19 – 41
	21 – 40
	24 – 40
6X7–48119–00	24 – 12
6X5–48119–01	11 – 61
6X6–48119–04	17 – 12
6X6–48119–10	18 – 13
	19 – 13
	21 – 13
6X5–48119–11	11 – 60
704–48119–50	7 – 11
704–48119–60	8 – 11
6X0–48121–00	9 – 38
	10 – 38
6X0–48127–00	9 – 54
6X5–48127–00	11 – 34
6X7–48127–00	19 – 76
	24 – 43
	24 – 43
EL8–48127–00	7 – 24
	8 – 24
	9 – 24
	10 – 24
	17 – 11
	18 – 12
	19 – 12

PART NO.	REF. NO.
EL8–48127–00	21 – 12
	24 – 44
6X6–48127–01	17 – 65
	18 – 72
	19 – 61
	21 – 60
6X5–48127–10	11 – 39
6X5–48127–20	11 – 41
6X0–48128–00	9 – 65
	10 – 63
	19 – 77
	21 – 69
	24 – 66
6X6–48128–00	17 – 66
	18 – 73
	19 – 62
	21 – 61
	24 – 11
6X7–48128–00	24 – 73
703–48128–00	11 – 35
704–48128–00	8 – 64
703–48128–10	4 – 39
	5 – 39
	6 – 39
6X3–48129–00	9 – 68
	10 – 66
6X5–48129–00	11 – 36
703–48129–00	4 – 41
	5 – 41
	9 – 16
	10 – 16
	11 – 42
6X6–48129–01	17 – 61
	18 – 68
	19 – 57
	21 – 56
704–48129–11	7 – 2
	8 – 2
704–48129–60	8 – 69
6X0–48138–00	9 – 5
	10 – 5
703–48138–00	6 – 47
6X5–48144–00	11 – 29
6X6–48144–00	17 – 60
6X5–48144–10	11 – 28
6X6–48144–10	17 – 26
	18 – 31
	19 – 31

PART NO.	REF. NO.
6X6–48144–10	21 – 30
704–48144–10	7 – 53
704–48144–20	8 – 53
6X5–48152–00	11 – 6
703–48152–10	4 – 6
	5 – 6
	6 – 6
6X0–48153–00	9 – 48
	10 – 48
703–48153–00	4 – 61
	5 – 61
	6 – 53
	11 – 22
704–48153–00	7 – 58
	8 – 58
6X0–48155–00	9 – 61
	10 – 59
6X0–48156–00	9 – 66
	10 – 64
	11 – 44
	24 – 71
704–48156–00	8 – 65
	18 – 48
	19 – 48
	21 – 47
6X6–48158–00	17 – 38
	18 – 44
	19 – 44
	21 – 43
	24 – 33
EL8–48158–00	9 – 31
	10 – 31
EL8–48164–00	7 – 42
	8 – 42
	9 – 39
	10 – 39
704–48166–00	7 – 59
	8 – 70
6X6–48167–00	17 – 16
6X7–48167–00	24 – 14
6X6–48167–10	18 – 17
	19 – 17
	21 – 17
6X7–48167–10	24 – 13
6X6–48167–20	18 – 18
	19 – 18
	21 – 18
704–48167–20	7 – 62

PART NO.	REF. NO.
704–48167–30	8 – 72
6X6–48167–50	17 – 17
6X6–48167–60	18 – 19
	19 – 19
	21 – 19
6X6–48171–00	17 – 9
	18 – 10
	19 – 10
	21 – 10
	24 – 9
6X5–48175–00	11 – 71
6X5–48176–00	11 – 65
6X6–48176–00	17 – 21
704–48176–00	7 – 54
6X6–48176–10	18 – 24
	19 – 24
	21 – 24
6X7–48176–10	24 – 74
704–48176–10	8 – 54
6X6–48176–50	17 – 63
	18 – 70
	19 – 59
	21 – 58
6X6–48176–60	17 – 64
	18 – 71
	19 – 60
	21 – 59
704–48178–00	8 – 71
	9 – 35
	10 – 35
704–48178–10	7 – 61
6X0–48187–00	9 – 12
	10 – 12
6X6–48189–00	17 – 32
	18 – 38
	19 – 38
	21 – 37
6X7–48189–00	24 – 20
703–48189–00	4 – 19
	5 – 19
	6 – 19
	11 – 19
EL8–48191–00	7 – 17
	8 – 17
	9 – 20
	10 – 20
703–48192–00	9 – 45
	10 – 45

PART NO.	REF. NO.
704–48192–00	7 – 46
	8 – 46
704–48192–P0	7 – 55
	8 – 55
6X0–48193–00	9 – 64
	10 – 62
6X6–48193–00	17 – 34
	18 – 40
	19 – 40
	21 – 39
	24 – 39
704–48193–00	9 – 43
	10 – 43
703–48198–00	4 – 16
	5 – 16
	6 – 16
	11 – 16
	17 – 33
	18 – 39
	19 – 39
	21 – 38
	24 – 38
6X7–481A0–01	24 – 18
6X6–481A0–02	17 – 24
	18 – 29
6X6–481A0–12	19 – 29
	21 – 28
6X6–481A0–22	18 – 77
6X6–481A0–32	19 – 68
	21 – 64
703–48201–21	1 – 1
	5 – 1
703–48201–B1	1 – 1
	5 – 1
703–48203–21	1 – 1
	5 – 1
703–48205–22	1 – 1
	5 – 1
6X6–48205–61	13 – 1
	17 – 1
6X6–48205–71	13 – 1
	17 – 1
6X6–48205–81	13 – 1
	17 – 1
703–48205–B2	1 – 1
	5 – 1
704–48205–R0	2 – 1
	7 – 1

PART NO.	REF. NO.
6X3–48206–10	3 – 1
	9 – 1
6X3–48206–20	3 – 2
	10 – 1
703–48206–20	1 – 2
	6 – 1
6X7–48206–21	23 – 1
	24 – 1
6X7–48206–31	23 – 1
	24 – 1
6X7–48206–41	23 – 1
	24 – 1
704–48206–R0	2 – 1
	7 – 1
6X5–48207–03	3 – 3
	11 – 1
703–48207–22	1 – 1
	5 – 1
6X6–48207–61	14 – 1
	18 – 1
6X6–48207–71	14 – 1
	18 – 1
6X6–48207–81	14 – 1
	18 – 1
704–48207–R0	2 – 2
	8 – 1
6X6–48208–61	15 – 1
	19 – 1
6X6–48208–71	15 – 1
	19 – 1
6X6–48209–21	16 – 1
	21 – 1
6X6–48209–31	16 – 1
	21 – 1
703–48210–21	1 – 1
	4 – 1
6X0–48211–00	9 – 26
	10 – 26
6X6–48211–10	19 – 70
	21 – 65
	24 – 60
703–48211–10	4 – 25
	5 – 25
	6 – 25
6X6–48212–00	17 – 25
	18 – 30
	19 – 30
	21 – 29
6X7–48212–00	24 – 19
EL8–48212–00	9 – 2
	10 – 2
703–48212–10	4 – 26
	5 – 26
	6 – 26
6X5–48213–00	11 – 58
6X6–48213–00	17 – 43
	18 – 51
	19 – 51
	21 – 50
EL8–48213–00	9 – 75
	10 – 71
703–48213–10	4 – 27
	5 – 27
	6 – 27
6X5–48214–00	11 – 63
6X5–48214–10	11 – 64
6X5–48215–00	11 – 80
6X5–48215–10	11 – 81
6X7–48215–10	24 – 17
703–48215–10	4 – 46
	5 – 46
	6 – 45
6X6–48215–30	17 – 13
6X6–48215–40	18 – 15
6X6–48215–50	19 – 15
704–48215–60	7 – 13
6X6–48215–70	21 – 15
704–48215–70	8 – 13
6X6–48216–00	17 – 14
6X6–48216–10	18 – 16
6X6–48216–20	19 – 16
	21 – 16
6X5–48219–00	11 – 67
6X6–48219–00	17 – 18
6X6–48219–10	18 – 20
	19 – 20
	21 – 20
703–48219–10	4 – 34
	5 – 34
	6 – 34
6X6–48219–20	18 – 21
	19 – 21
	21 – 21
704–48219–R0	7 – 52
	8 – 52
6X5–48221–00	11 – 26
6X6–48221–00	17 – 3
	18 – 3
	19 – 3
	21 – 3
6X7–48221–00	24 – 3
6X3–48221–10	9 – 56
6X5–48221–10	11 – 27
703–48221–10	4 – 28
	5 – 28
	6 – 28
6X3–48221–20	10 – 55
704–48221–R0	7 – 43
	8 – 43
6X6–48222–00	17 – 4
	18 – 4
	19 – 4
	21 – 4
6X7–48222–00	24 – 4
6X5–48222–01	11 – 31
6X3–48222–10	9 – 49
6X6–48222–10	18 – 6
	19 – 6
	21 – 6
704–48222–10	7 – 33
6X5–48222–11	11 – 33
6X3–48222–20	10 – 49
703–48222–20	4 – 31
	5 – 31
704–48222–20	8 – 62
6X5–48222–21	11 – 66
6X5–48222–30	11 – 85
703–48222–30	4 – 31
	5 – 31
	6 – 31
704–48222–30	8 – 33
6X0–48223–00	9 – 55
6X7–48223–00	24 – 6
6X3–48223–10	10 – 54
703–48223–10	4 – 32
	5 – 32
	6 – 32
6X5–48224–00	11 – 13
6X6–48224–00	17 – 5
	18 – 5
	19 – 5
	21 – 5
6X7–48224–00	24 – 5
6X6–48224–10	17 – 6
6X6–48224–10	18 – 7
	19 – 7
	21 – 7
6X7–48224–10	24 – 7
704–48224–R0	7 – 49
	8 – 49
6X0–48225–00	10 – 56
6X3–48225–00	9 – 58
6X5–48225–00	11 – 68
6X6–48225–00	18 – 25
	19 – 25
	21 – 25
6X7–48225–00	24 – 15
6X3–48225–10	9 – 57
703–48225–10	4 – 33
	5 – 33
	6 – 33
6X3–48225–30	9 – 60
	10 – 58
704–48225–R0	7 – 45
	8 – 45
703–48227–00	4 – 30
	5 – 30
	6 – 30
	9 – 50
	10 – 50
	24 – 8
6X5–48228–00	11 – 73
6X7–48228–00	24 – 25
6X6–48228–01	17 – 44
	18 – 52
	19 – 52
	21 – 51
6X5–48229–01	11 – 30
6X5–48229–11	11 – 32
704–48229–20	8 – 60
704–48229–30	7 – 36
	8 – 36
703–48230–21	1 – 1
	4 – 1
704–48231–00	7 – 26
	8 – 26
EL8–48231–00	9 – 27
	10 – 27
6X5–48232–00	11 – 2
703–48232–00	4 – 2
	5 – 2
	6 – 2
704–48232–P1	7 – 41
	8 – 41
6X7–48233–00	24 – 23
704–48233–00	7 – 56
	8 – 56
EL8–48233–00	9 – 46
	10 – 46
6X6–48233–01	17 – 28
	18 – 34
	19 – 34
	21 – 33
6X6–48234–00	17 – 36
	18 – 42
	19 – 42
	21 – 41
	24 – 37
703–48234–00	4 – 20
	5 – 20
	6 – 20
	11 – 20
704–48234–00	7 – 51
	8 – 51
EL8–48234–00	9 – 44
	10 – 44
702–48235–00	9 – 47
	10 – 47
703–48235–00	4 – 5
	5 – 5
	6 – 5
	11 – 5
704–48235–00	7 – 57
	8 – 57
6X6–48236–00	17 – 31
	18 – 37
	19 – 37
	21 – 36
	24 – 34
703–48236–00	4 – 18
	5 – 18
	6 – 18
	11 – 18
6X6–48237–00	17 – 30
	18 – 36
	19 – 36
	21 – 35
	24 – 35
6X6–48238–00	17 – 29
	18 – 35
6X6–48238–00	19 – 35
	21 – 34
	24 – 36
703–48238–00	4 – 24
	5 – 24
	6 – 24
	11 – 24
704–48238–00	7 – 40
	8 – 40
	9 – 37
	10 – 37
6X6–48241–00	17 – 70
	18 – 80
	19 – 80
	21 – 70
	24 – 29
EL8–48241–00	7 – 27
	8 – 27
	9 – 28
	10 – 28
6X7–48242–00	24 – 24
6X6–48242–02	17 – 27
	18 – 32
	19 – 32
	21 – 31
704–48242–10	7 – 44
	8 – 44
EL8–48242–10	9 – 40
	10 – 40
6X6–48242–12	18 – 33
	19 – 33
	21 – 32
703–48243–00	4 – 17
	5 – 17
	6 – 17
	11 – 17
703–48244–00	4 – 23
	5 – 23
	6 – 23
	11 – 23
EL8–48244–00	7 – 31
	8 – 30
	9 – 33
	10 – 33
703–48245–00	4 – 13
	5 – 13
	6 – 13
EL8–48245–00	7 – 32

PART NO.	REF. NO.
EL8–48245–00	8 – 31
	9 – 34
	10 – 34
6X6–48245–01	17 – 71
	18 – 81
	19 – 81
	24 – 28
6X5–48246–00	11 – 62
701–48246–00	7 – 5
	8 – 5
703–48246–00	4 – 29
	5 – 29
	6 – 29
	11 – 74
701–48248–00	4 – 15
	5 – 15
	6 – 15
	7 – 39
	8 – 39
	9 – 36
	10 – 36
	11 – 15
703–48250–22	1 – 1
	4 – 1
EL8–48251–00	7 – 3
	8 – 3
	9 – 3
	10 – 3
703–48252–00	4 – 14
	5 – 14
	6 – 14
	11 – 14
6X3–48254–00	10 – 53
EL8–48254–00	7 – 28
	8 – 28
	9 – 29
	10 – 29
EL8–48259–00	7 – 7
	8 – 7
	9 – 8
	10 – 8
703–48260–20	1 – 2
	6 – 1
6X0–48261–00	9 – 19
	10 – 19
6X5–48261–00	11 – 4
704–48261–00	7 – 16
	8 – 16

PART NO.	REF. NO.
703–48261–01	5 – 4
	6 – 4
703–48261–11	4 – 4
	6 – 4
6X0–48262–00	9 – 10
	10 – 10
704–48262–00	7 – 8
	8 – 8
702–48263–00	9 – 41
	10 – 41
6X0–48264–00	9 – 11
	10 – 11
6X5–48264–00	11 – 8
6X6–48264–00	17 – 39
	18 – 45
	19 – 45
	21 – 44
	24 – 30
703–48264–00	4 – 8
	5 – 8
	6 – 8
704–48264–00	7 – 9
	8 – 9
6X0–48265–00	9 – 9
	10 – 9
6X5–48265–00	11 – 11
703–48265–00	6 – 11
704–48265–00	7 – 4
	8 – 4
703–48265–10	4 – 11
	5 – 11
704–48266–00	9 – 14
	10 – 14
6X5–48267–00	11 – 43
	11 – 83
6X6–48267–00	17 – 37
	18 – 43
	19 – 43
	21 – 42
	24 – 31
6X6–48267–C0	17 – 23
	18 – 28
	19 – 28
	21 – 27
703–48268–00	4 – 7
	5 – 7
	6 – 7
	11 – 7

PART NO.	REF. NO.
6X5–48271–00	11 – 3
703–48271–00	4 – 3
	5 – 3
	6 – 3
704–48271–00	7 – 23
	8 – 23
EL8–48271–00	9 – 23
	10 – 23
703–48272–22	1 – 1
	4 – 1
EL8–48279–00	7 – 50
	8 – 50
	9 – 42
	10 – 42
6X0–48281–00	9 – 63
	10 – 61
703–48281–00	4 – 35
	5 – 35
	6 – 35
704–48281–00	7 – 14
	8 – 14
	9 – 71
	10 – 67
EL8–48281–00	7 – 12
	8 – 12
	9 – 17
	10 – 17
704–48283–00	7 – 18
	8 – 18
	18 – 49
	19 – 49
	21 – 48
703–48284–00	4 – 58
	5 – 58
703–48284–10	4 – 58
	5 – 58
703–48284–20	6 – 50
704–48284–P0	7 – 60
	8 – 67
704–48285–20	8 – 68
701–48287–00	4 – 45
	5 – 45
	6 – 44
	9 – 67
	10 – 65
	24 – 72
704–48287–00	7 – 21
	8 – 21

PART NO.	REF. NO.
704–48287–00	11 – 46
	17 – 40
	18 – 46
	19 – 46
	21 – 45
	24 – 32
6X0–48288–00	9 – 53
703–48290–01	1 – 3
6X5–48293–00	11 – 87
703–48293–10	4 – 44
	5 – 44
	6 – 43
704–48293–20	2 – 3
704–48293–30	2 – 6
701–48310–10	12 – 1
701–48310–20	12 – 1
701–48310–40	12 – 1
701–48310–60	12 – 1
701–48310–80	12 – 1
701–48310–90	12 – 1
6X5–48317–00	11 – 76
6X5–48317–10	11 – 77
701–48320–00	12 – 1
701–48320–20	12 – 1
701–48320–30	12 – 1
701–48320–40	12 – 1
701–48320–50	12 – 1
701–48320–60	12 – 1
701–48320–70	12 – 1
701–48320–80	12 – 1
701–48320–90	12 – 1
647–48330–50	48 – 10
648–48330–50	50 – 21
617–48331–91	48 – 14
	50 – 22
6X5–48338–00	11 – 78
6X5–48338–10	11 – 79
647–48340–50	48 – 16
648–48340–50	50 – 15
6FM–48344–00	49 – 7
	51 – 2
	52 – 10
	52 – 12
	53 – 12
	53 – 16
	54 – 17
	54 – 29
	55 – 18

PART NO.	REF. NO.
703–48345–01	4 – 21
	5 – 21
	6 – 21
	7 – 20
	8 – 20
	9 – 22
	10 – 22
	11 – 21
647–48346–50	48 – 17
648–48346–50	50 – 23
617–48346–90	48 – 11
	50 – 17
701–48350–00	12 – 1
701–48350–10	12 – 1
701–48350–20	12 – 1
701–48350–30	12 – 1
701–48350–40	12 – 1
701–48350–50	12 – 1
701–48350–60	12 – 1
701–48350–70	12 – 1
6X5–48351–00	11 – 54
6X5–48354–00	11 – 59
6X5–48358–00	11 – 25
703–48358–00	4 – 22
	5 – 22
	6 – 22
	7 – 25
	8 – 25
	9 – 25
	10 – 25
617–48361–91	48 – 20
	50 – 16
63V–48501–00	49 – 1
69R–48501–00	50 – 1
6AH–48501–00	53 – 1
6BL–48501–00	54 – 1
6FM–48501–00	55 – 1
66T–48501–01	51 – 1
6DR–48501–01	52 – 1
655–48501–02	48 – 1
655–48501–10	48 – 1
69R–48501–10	50 – 1
700–48510–12	48 – 22
	50 – 27
	58 – 9
63D–48511–01	56 – 6
63V–48511–01	56 – 8
65W–48511–01	51 – 7

PART NO.	REF. NO.
65W–48511–01	54 – 7
	57 – 6
67F–48511–01	57 – 7
68V–48511–01	57 – 10
6AH–48511–01	57 – 1
676–48511–02	56 – 1
689–48511–02	50 – 28
	58 – 5
676–48511–10	48 – 23
	58 – 1
69G–48511–10	58 – 10
688–48511–12	56 – 7
63V–48531–00	49 – 2
6AH–48531–00	53 – 14
68T–48531–01	52 – 2
655–48531–51	48 – 2
689–48531–51	50 – 13
6AH–48532–00	53 – 7
689–48532–51	50 – 11
63V–48534–00	49 – 17
647–48534–50	48 – 5
648–48534–50–4D	50 – 9
63D–48538–00	55 – 20
6BL–48538–00	54 – 8
6H3–48538–00	51 – 4
682–48538–50	49 – 3
	52 – 3
	53 – 9
63V–48544–00	49 – 19
6E5–61301–01	67 – 1
6E5–61303–00	67 – 5
6E5–61311–11	67 – 3
6E5–61313–00	67 – 2
6E5–61315–00	67 – 4
63D–61350–00	62 – 1
65W–61350–00	63 – 1
67F–61350–00	65 – 1
697–61350–00	64 – 1
6AH–61350–00	60 – 1
6BG–61350–00	68 – 1
6EK–61350–00	69 – 1
6FM–61350–00	70 – 1
689–61350–02	61 – 1
6E5–61350–02	66 – 1
688–61350–10	64 – 1
68T–61350–10	59 – 1
63D–61351–00	62 – 2
65W–61351–00	63 – 2

PART NO.	REF. NO.
697–61351–00	64 – 2
689–61351–01	61 – 2
6E5–61351–01	66 – 2
688–61351–10	64 – 2
6E5–61355–00	59 – 6
	60 – 6
	61 – 7
	64 – 8
	66 – 5
	69 – 2
6X6–81145–01	17 – 41
	18 – 75
	19 – 64
	21 – 63
6X6–81146–01	17 – 67
	18 – 74
	19 – 63
	21 – 62
6X6–81147–00	17 – 42
	18 – 50
	19 – 50
	21 – 49
6Y8–81920–11	17 – 76
	18 – 87
	20 – 13
	22 – 13
	24 – 76
68V–81950–00	32 – 9
	35 – 12
704–81950–10	8 – 59
	11 – 72
	17 – 68
	18 – 78
	19 – 78
	24 – 59
6X3–81971–00	43 – 1
6X3–81971–10	43 – 2
6K1–81980–00	30 – 18
6X6–81980–00	33 – 9
	34 – 7
	36 – 9
	37 – 6
	39 – 12
	39 – 18
	40 – 6
	40 – 12
6X6–81980–10	38 – 6
6X6–81980–40	46 – 27

PART NO.	REF. NO.
703–82119–00	17 – 59
	18 – 67
	20 – 11
	22 – 10
	24 – 51
	46 – 11
	46 – 22
	55 – 23
688–82388–00	43 – 5
6X5–82507–00	35 – 11
6Y8–82507–00	32 – 10
6X6–82510–01	28 – 3
61B–82510–02	31 – 4
6X5–82510–02	35 – 2
6R5–82510–03	26 – 4
6Y8–82510–03	32 – 3
64D–82510–04	41 – 4
6K1–82510–07	30 – 3
704–82510–0A	25 – 4
	27 – 2
	42 – 1
6X6–82510–10	33 – 3
703–82510–13	5 – 48
6X6–82510–20	36 – 3
64D–82510–21	41 – 4
703–82510–34	4 – 48
	5 – 48
6X6–82510–40	39 – 2
703–82510–44	4 – 48
	5 – 48
6X6–82511–09–A1	28 – 5
	33 – 5
	36 – 5
	39 – 3
6X6–82511–09–A2	28 – 5
	33 – 5
	36 – 5
	39 – 3
6X6–82511–09–A3	28 – 5
	33 – 5
	36 – 5
	39 – 3
6X6–82511–09–A4	28 – 5
	33 – 5
	36 – 5
	39 – 3
6X6–82511–09–A5	28 – 5
	33 – 5

PART NO.	REF. NO.
6X6–82511–09–A5	36 – 5
	39 – 3
6X6–82511–09–A6	28 – 5
	33 – 5
	36 – 5
	39 – 3
6X6–82511–09–A7	28 – 5
	33 – 5
	36 – 5
	39 – 3
6X6–82511–09–A8	28 – 5
	33 – 5
	36 – 5
	39 – 3
6X6–82511–09–A9	28 – 5
	33 – 5
	36 – 5
	39 – 3
6X6–8252S–00	19 – 73
	21 – 67
	24 – 63
6X6–8252V–00	17 – 73
	18 – 83
	19 – 83
	24 – 42
703–82531–00	4 – 51
	5 – 51
6K1–82532–00	4 – 50
	5 – 50
	25 – 6
	27 – 4
	30 – 5
	41 – 6
	42 – 3
703–82532–00	5 – 50
	26 – 6
	28 – 4
	31 – 6
	32 – 5
	33 – 4
	35 – 4
	36 – 4
6X5–82540–00	11 – 47
6X6–82540–00	17 – 69
	18 – 79
	19 – 79
	24 – 27
703–82540–00	4 – 55

PART NO.	REF. NO.
703–82540–00	5 – 55
704–82540–00	9 – 15
	10 – 15
6X6–82540–10	18 – 84
	19 – 84
704–82540–30	8 – 10
704–82540–40	7 – 10
704–82541–10	9 – 72
	10 – 68
6X6–82545–00	17 – 72
	18 – 82
	19 – 82
	21 – 72
6X7–82545–00	24 – 26
6Y8–82553–50	17 – 75
	18 – 86
	20 – 12
	22 – 12
	24 – 75
682–82556–00	4 – 53
	5 – 53
	6 – 49
	9 – 70
	25 – 8
	26 – 8
	27 – 6
	28 – 7
	30 – 7
	31 – 8
	32 – 7
	33 – 7
	35 – 6
	36 – 7
	38 – 3
	39 – 5
	40 – 14
	41 – 20
	42 – 11
	42 – 13
	43 – 3
6X7–82563–00	24 – 2
6X6–82563–01	17 – 2
	18 – 2
	19 – 2
	21 – 2
6X3–82563–02	9 – 52
	10 – 52
6X5–82563–02	11 – 48

PART NO.	REF. NO.
688–82563–10	43 – 4
6X5–82563–12	11 – 49
703–82563–21	4 – 57
	5 – 57
6X5–82563–22	11 – 50
703–82563–31	4 – 57
	5 – 57
6X5–82563–32	11 – 51
6X6–82563–40	18 – 26
	19 – 26
6X6–82563–50	18 – 76
	19 – 65
6X6–82563–60	19 – 66
704–82563–60	7 – 35
704–82563–70	8 – 35
704–82563–80	8 – 61
704–82563–90	8 – 66
6ES–82570–00	16 – 7
	40 – 13
6X5–82570–02	35 – 1
6Y8–82570–04	32 – 1
64D–82570–05	41 – 1
61B–82570–06	31 – 1
6R5–82570–07	26 – 1
64D–82570–11	41 – 16
704–82570–12	25 – 1
6K1–82570–13	30 – 1
64D–82570–22	23 – 2
	41 – 1
64D–82570–31	41 – 16
6X6–82570–33	13 – 2
	28 – 1
6X6–82570–40	14 – 2
	33 – 1
6X6–82570–50	15 – 2
	36 – 1
6X6–82570–60	14 – 3
	33 – 10
6X6–82570–70	15 – 3
	36 – 10
6X6–82570–80	13 – 3
	23 – 3
	29 – 1
6X6–82570–90	13 – 4
	14 – 5
	15 – 5
	38 – 1
6X6–82570–B0	13 – 5

PART NO.	REF. NO.
6X6–82570–B0	14 – 6
	15 – 6
	23 – 4
	38 – 4
6X6–82570–D0	46 – 24
6X6–82570–E0	14 – 4
	34 – 1
6X6–82570–F0	15 – 4
	37 – 1
6X6–82570–G0	16 – 2
	39 – 1
6X6–82570–J0	16 – 3
	16 – 5
	39 – 7
	40 – 1
6X6–82570–K0	16 – 4
	16 – 6
	39 – 13
	40 – 7
6X6–82570–L0	16 – 8
	40 – 15
6X6–82570–N1	22 – 11
64D–82571–00	41 – 2
6X5–82571–00	35 – 7
6X6–82571–00	28 – 2
6Y8–82571–01	32 – 2
6K1–82571–02	30 – 2
	31 – 2
704–82571–02	25 – 2
	26 – 2
64D–82571–10	41 – 17
6X6–82571–10	33 – 2
	36 – 2
6X6–82571–20	33 – 11
	34 – 2
6X6–82571–30	36 – 11
	37 – 2
6X6–82571–40	29 – 2
6X6–82571–50	38 – 2
6X6–82571–60	46 – 25
6X6–82571–70	38 – 5
	40 – 16
6X6–82571–80	39 – 9
	40 – 3
6X6–82571–90	39 – 15
	40 – 9
6X5–82575–00	35 – 5
64D–82575–01	41 – 19

PART NO.	REF. NO.
6K1–82575–01	30 – 6
	31 – 7
	32 – 6
6X3–82575–01	9 – 69
6X7–82575–01	24 – 45
688–82575–02	4 – 52
	5 – 52
	25 – 7
	26 – 7
	27 – 5
6ES–82575–10	39 – 4
6X6–82575–10	33 – 6
	36 – 6
64D–82575–11	41 – 19
	42 – 12
688–82575–12	28 – 6
	42 – 10
701–82575–53	6 – 48
703–82577–00	4 – 49
	5 – 49
	25 – 5
	27 – 3
	30 – 4
	41 – 5
	42 – 2
676–82577–01	5 – 49
	26 – 5
	31 – 5
	32 – 4
	35 – 3
6X3–8257B–01	42 – 4
704–8257C–03	27 – 1
6X6–8257Y–00	22 – 8
6X6–8257Y–70	17 – 56
	18 – 64
	20 – 8
	24 – 52
	46 – 8
	46 – 19
6X6–82580–A0	17 – 49
	46 – 1
6X6–82580–B0	18 – 57
	46 – 12
6X6–82580–C0	20 – 1
6X6–82580–D0	22 – 1
6X6–82580–E0	17 – 49
6X6–82580–F0	18 – 57
6X6–82580–G0	20 – 1

PART NO.	REF. NO.
6X6–82580–H0	22 – 1
6X6–82580–J0	17 – 49
6X6–82580–K0	18 – 57
64D–82581–00	25 – 9
	26 – 9
	27 – 7
	32 – 11
	41 – 7
	42 – 5
6X5–82581–00	35 – 9
6X6–82581–00	19 – 75
	21 – 68
	24 – 65
6FM–82582–00	55 – 24
6Y8–82582–11	17 – 57
	17 – 77
	18 – 65
	18 – 88
	20 – 9
	20 – 14
	22 – 9
	22 – 14
	24 – 50
	24 – 77
	46 – 9
	46 – 20
6X6–82582–40	17 – 52
	18 – 60
	20 – 4
	22 – 4
	24 – 54
	46 – 4
	46 – 15
6X6–82582–60	17 – 51
	18 – 59
	20 – 3
	22 – 3
	24 – 53
	46 – 3
	46 – 14
6X6–82582–A0	17 – 53
	18 – 61
	20 – 5
	22 – 5
	24 – 48
	24 – 55
	46 – 5
	46 – 16

PART NO.	REF. NO.
6X6–82582–C0	17 – 54
	18 – 62
	20 – 6
	22 – 6
	24 – 56
	46 – 6
	46 – 17
6X6–82584–00	19 – 74
	24 – 64
6X6–82585–00	17 – 58
	18 – 66
	20 – 10
	46 – 10
	46 – 21
6X6–82585–20	17 – 50
	18 – 58
	20 – 2
	22 – 2
	24 – 47
	46 – 2
	46 – 13
6X6–82585–60	17 – 55
	24 – 49
	46 – 7
6X6–82585–70	18 – 63
	20 – 7
	22 – 7
	46 – 18
688–82586–11	44 – 4
688–82586–21	4 – 54
	5 – 54
688–82586–31	44 – 4
688–82586–50	44 – 1
64D–82588–00	41 – 3
61B–82588–01	31 – 3
6R5–82588–01	25 – 3
	26 – 3
64D–82588–10	41 – 18
6X6–8258A–00	45 – 1
	45 – 1
	45 – 1
	45 – 1
703–8258A–00	44 – 3
61B–8258A–01	44 – 2
688–8258A–10	44 – 5
6X6–8258A–10	45 – 1
	45 – 1
	45 – 1

PART NO.	REF. NO.
6X6–8258A–10	45 – 1
688–8258A–20	4 – 54
	5 – 54
6X6–8258A–20	45 – 1
	45 – 1
	45 – 1
	45 – 1
688–8258A–30	44 – 5
6X6–8258A–30	45 – 1
	45 – 1
	45 – 1
	45 – 1
6K1–8258A–40	44 – 2
6X6–8258A–40	45 – 1
	45 – 1
	45 – 1
	45 – 1
	45 – 1
688–8258A–50	44 – 2
6X6–8258A–50	45 – 1
	45 – 1
	45 – 1
	45 – 1
	45 – 1
688–8258A–60	44 – 2
6X6–8258A–60	45 – 1
	45 – 1
	45 – 1
	45 – 1
688–8258A–70	44 – 2
6X6–8258A–B1	45 – 3
	45 – 3
	45 – 3
6X6–8258A–D1	45 – 3
	45 – 3
	45 – 3
6X6–8258A–F1	45 – 3
	45 – 3
	45 – 3
6X6–8258A–G1	45 – 2
	45 – 2
	45 – 2
	45 – 2
6X6–8258A–H1	45 – 2
	45 – 2
	45 – 2
	45 – 2
6X6–8258A–J1	45 – 2
	45 – 2
	45 – 2

PART NO.	REF. NO.
6X6–8258A–J1	45 – 2
6X6–8258A–K0	47 – 4
	47 – 4
	47 – 4
6X6–8258A–M0	47 – 1
6X6–8258A–N0	47 – 2
6X6–8258A–P0	47 – 3
6X6–8258A–R0	45 – 4
6X6–8258A–S0	45 – 4
6X6–8258A–T0	45 – 4
6X5–82590–00	11 – 82
704–82590–10	8 – 63
6X7–82590–20	24 – 57
6X7–82590–30	47 – 5
6X7–82590–50	24 – 46
6X7–82590–60	24 – 57
6X7–82590–70	24 – 46
6X7–82590–80	24 – 46
6X6–82591–00	19 – 72
	24 – 62
703–82591–00	4 – 59
	5 – 59
	6 – 51
	11 – 52
	17 – 46
	18 – 54
	19 – 54
	21 – 53
	24 – 41
	46 – 23
	46 – 23
703–82591–10	17 – 74
	18 – 85
	19 – 85
	21 – 74
703–82592–00	4 – 60
	5 – 60
	6 – 52
704–82594–00	7 – 34
	8 – 34
6X6–8259E–00	17 – 19
	18 – 22
	19 – 22
	21 – 22
6X7–8259E–00	24 – 21
6X6–8259E–20	29 – 3
	33 – 13
	34 – 4

PART NO.	REF. NO.
6X6–8259E–20	36 – 12
	37 – 3
	39 – 8
	39 – 14
	40 – 2
	40 – 8
	46 – 26
6X6–8259F–10	19 – 67
	21 – 73
6X6–82716–00	33 – 14
6X6–82716–10	36 – 13
6X6–82716–20	29 – 5
6X6–82716–40	34 – 6
	39 – 11
	39 – 17
	40 – 5
	40 – 11
6X6–82716–50	37 – 5
6R5–83383–00	26 – 13
	31 – 13
	32 – 8
	42 – 9
6X4–83383–00	35 – 10
6X5–83383–00	35 – 8
703–83383–11	4 – 56
	5 – 56
688–83383–12	25 – 13
	27 – 11
	30 – 12
	41 – 11
703–83383–A0	28 – 8
	29 – 4
	33 – 8
	34 – 5
	36 – 8
	37 – 4
	39 – 6
	39 – 10
	39 – 16
	40 – 4
	40 – 10
6K1–83614–01	30 – 8
	31 – 9
6X6–83720–00	33 – 12
	34 – 3
6AH–83773–00	53 – 5
6X6–84301–00	17 – 15
6X7–84301–00	24 – 22

PART NO.	REF. NO.
6X6–84301–13	18 – 14
6X6–84301–23	19 – 14
6X6–84301–40	21 – 14
6D5–84340–00	53 – 19
	54 – 31
	55 – 21
6X6–85557–00	19 – 71
	21 – 66
	24 – 61
6X6–85590–31	17 – 45
	18 – 53
	19 – 53
	21 – 52
	24 – 58
61B–85830–01	31 – 14
6K1–85830–02	30 – 13
90101–09M01	62 – 7
	63 – 7
	65 – 7
	68 – 6
	70 – 6
90101–09M70	67 – 9
90109–06316	55 – 3
90109–06M86	53 – 15
90116–10062	57 – 8
	57 – 11
90149–05M05	25 – 14
	26 – 14
	30 – 19
	31 – 19
	41 – 12
	41 – 21
90159–05M25	49 – 20
90170–09M03	59 – 4
	60 – 4
	61 – 5
	62 – 5
	63 – 5
	64 – 5
	65 – 4
	68 – 4
	69 – 3
	70 – 4
90170–09M05	67 – 10
90170–14M06	67 – 6
90185–08057	56 – 10
	57 – 4
	58 – 12

PART NO.	REF. NO.
90185–09M01	59 – 3
	60 – 3
	61 – 4
	62 – 4
	63 – 4
	64 – 4
	65 – 3
	66 – 6
	67 – 11
	68 – 3
	69 – 5
	70 – 3
90185–10027	48 – 26
	50 – 31
	54 – 6
	57 – 9
	57 – 12
	58 – 4
	58 – 8
90201–04M06	49 – 15
90201–05M06	54 – 14
90201–06M31	54 – 11
	54 – 26
90201–06M62	55 – 14
90201–08M12	49 – 9
90201–10120	51 – 8
90201–10M02	49 – 13
90201–10M20	59 – 2
	60 – 2
	61 – 3
	62 – 3
	63 – 3
	64 – 3
	65 – 2
	66 – 7
	68 – 2
	69 – 6
	70 – 2
90201–10M63	59 – 7
	60 – 7
	61 – 8
	62 – 8
	63 – 8
	64 – 7
	65 – 6
	68 – 7
	69 – 9
	70 – 7

PART NO.	REF. NO.
90201–10M76	67 – 8
90206–10M04	49 – 12
90254–03M05	51 – 5
90386–10009	49 – 21
	50 – 7
90386–10025	49 – 11
90387–06139	54 – 23
90387–06M59	55 – 13
90387–06M86	54 – 10
90387–10M42	59 – 5
	60 – 5
	61 – 6
	62 – 6
	63 – 6
	64 – 6
	65 – 5
	68 – 5
	69 – 4
	70 – 5
90387–10M61	66 – 3
90446–09M42	54 – 32
	55 – 22
90465–11M10	53 – 3
90465–13M18	53 – 18
90468–10005	54 – 15
90468–18001	54 – 16
90468–18008	49 – 8
	51 – 3
	52 – 11
	52 – 13
	53 – 13
	53 – 17
	54 – 18
	54 – 30
	55 – 7
	55 – 19
90480–19031	53 – 8
90501–10071	48 – 13
	50 – 25
90501–10264	48 – 19
	50 – 19
90508–20040	54 – 20
90560–12M01	66 – 4
91490–20010	49 – 16
91690–30012	48 – 15
	48 – 21
	49 – 4
	50 – 18

PART NO.	REF. NO.
91690–30012	50 – 24
	52 – 4
	53 – 10
91690–40018	50 – 8
92780–06020	7 – 29
	8 – 29
	9 – 30
	10 – 30
92903–05100	25 – 11
	26 – 11
	26 – 16
	27 – 9
	32 – 13
	41 – 9
	42 – 7
92903–05600	26 – 17
92990–05100	25 – 16
	30 – 10
	30 – 21
	31 – 11
	31 – 21
	41 – 14
	41 – 23
92990–05200	11 – 84
	17 – 20
	18 – 23
	19 – 23
	21 – 23
	24 – 69
92990–05300	7 – 37
	8 – 37
	9 – 62
	10 – 60
	11 – 70
	17 – 8
	18 – 9
	19 – 9
	21 – 9
92990–05600	25 – 17
	30 – 22
	31 – 22
	41 – 15
	41 – 24
92990–06100	30 – 16
	31 – 17
92990–06300	7 – 48
	8 – 48
92990–06600	30 – 17

PART NO.	REF. NO.
92990–06600	31 – 18
92990–08200	11 – 38
92990–08600	4 – 38
	5 – 38
	6 – 38
	11 – 69
	17 – 10
	18 – 11
	19 – 11
	21 – 11
	24 – 10
	48 – 12
	48 – 18
	50 – 20
	50 – 26
92990–10100	56 – 3
92990–10600	9 – 7
	10 – 7
	48 – 25
	56 – 4
	58 – 3
	58 – 7
92995–05600	48 – 7
92995–06600	48 – 4
92995–08600	57 – 3
92995–10600	50 – 30
93210–12327	52 – 8
93210–16275	59 – 9
	60 – 9
	61 – 10
	62 – 10
	63 – 10
	64 – 10
	65 – 9
	66 – 9
	68 – 9
	69 – 8
	70 – 9
93430–06024	4 – 12
	5 – 12
	6 – 12
	7 – 6
	8 – 6
	9 – 6
	10 – 6
	11 – 12
93700–06M03	54 – 5
95303–05600	26 – 15

PART NO.	REF. NO.
95303–05700	25 – 12
	26 – 12
	27 – 10
	32 – 14
	41 – 10
	42 – 8
95380–05600	4 – 9
	5 – 9
	6 – 9
	7 – 22
	8 – 22
	11 – 9
	17 – 48
	18 – 56
	19 – 56
	21 – 55
	25 – 15
	30 – 11
	30 – 20
	31 – 12
	31 – 20
	41 – 13
	41 – 22
	50 – 4
95380–05700	55 – 10
95380–06600	4 – 43
	5 – 43
	6 – 42
	7 – 38
	8 – 38
	9 – 13
	10 – 13
	11 – 75
	30 – 15
	31 – 16
	48 – 9
	49 – 6
	52 – 6
95380–10600	56 – 5
95380–14700	67 – 7
95780–08300	49 – 18
95895–06016	55 – 16
95895–06045	55 – 15
97003–05012	32 – 12
97075–10040	48 – 24
	50 – 29
	56 – 2
	58 – 2

PART NO.	REF. NO.
97075–10040	58 – 6
97090–06045	48 – 8
97095–05020	48 – 6
97095–06018	48 – 3
97095–06025	54 – 28
97095–06065	54 – 27
97095–08025	57 – 2
97303–05012	25 – 10
	26 – 10
	27 – 8
	41 – 8
	42 – 6
97380–05025	4 – 10
	5 – 10
	6 – 10
	11 – 10
97380–06018	7 – 19
	8 – 19
	9 – 21
	10 – 21
97380–08030	4 – 37
	5 – 37
	6 – 37
	11 – 37
97575–08535	56 – 9
	58 – 11
97595–05516	52 – 9
97595–06512	50 – 10
	52 – 5
97595–06514	53 – 11
97595–06516	49 – 5
	50 – 12
	50 – 14
97595–06530	53 – 6
97595–06535	54 – 12
97780–05130	11 – 57
97780–06230	24 – 70
97780–40116	43 – 6
97780–50145	2 – 5
	2 – 8
	17 – 47
	18 – 55
	19 – 55
	21 – 54
97890–05016	7 – 63
	8 – 73
	9 – 4
	10 – 4

PART NO.	REF. NO.
97890–05025	7 – 15
	8 – 15
	9 – 18
	10 – 18
97890–06018	7 – 47
	8 – 47
97890–06035	9 – 65
	10 – 63
98580–04006	4 – 40
	5 – 40
	6 – 40
	9 – 32
	10 – 32
	11 – 40
98580–04010	17 – 22
	18 – 27
	19 – 27
	21 – 26
98580–05008	9 – 51
	10 – 51
98580–05010	11 – 55
98580–05012	11 – 56
	11 – 86
98580–05014	17 – 7
	18 – 8
	19 – 8
	21 – 8
	24 – 68
	24 – 68
98580–05025	18 – 47
	19 – 47
	21 – 46
	24 – 67
98580–05040	11 – 57
98580–05060	2 – 4
	2 – 7
	17 – 47
	18 – 55
	19 – 55
	21 – 54
98780–04010	11 – 45
98780–05010	19 – 69
	21 – 71
98780–05018	7 – 30
	8 – 32
98780–06035	24 – 70
98980–05010	30 – 9
	31 – 10

PART NO.	REF. NO.
98980–06020	30 – 14
	31 – 15

PART NO.	REF. NO.

PART NO.	REF. NO.

PART NO.	REF. NO.