YAMAHA

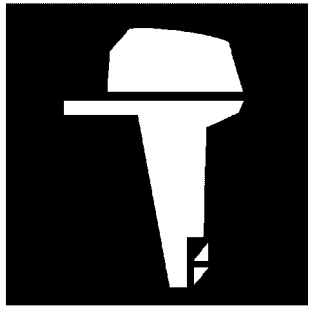

PARTS CATALOGUE

RIGGING-REMOCON

YAMAHA
GENUINE
Parts & Accessories

1Q601-10REA

( )

RIGGING-REMOCON
PARTS CATALOGUE
©2016 by Yamaha Motor Co., Ltd.
1st edition, October 2016
All rights reserved.
Any reprinting or unauthorized use
without the written permission of
Yamaha Motor Co., Ltd.
is expressly prohibited.
Printed in Japan.

FOREWORD

This Parts Catalogue is related to the parts for the model(s) on the cover page. When you are ordering replacement parts, please refer to this Parts Catalogue and quote both part numbers and part names correctly.

1. Modifications or additions which have been made after the issue of the Parts Catalogue will be announced in the Parts News.
   It is advisable that you make the necessary corrections to the Parts Catalogue according to the Parts News.

2. Abbreviations
   The following abbreviations are used in this Parts Catalogue.

   "UR" Use specified parts number.

   "UN" Use as many as needed.

   "AP" Alternate Parts

   "LM" Locally Made (Parts need to be ordered locally)

   "F#" Frame No. (Applicable machine No.)

   "O/S" Over Size

3. The number of components for assembly
   - Parts, which are to be supplied in an assembly, are listed with a dot (.) in front of the part name as shown below.
   - The numeral appearing to the right of each component part indicates the quantity of parts for each assembly unit.

PART NO.	DESCRIPTION	Q'TY	REMARKS
2F5–83310–60	FRONT FLASHER LIGHT ASSY	2	
115–83311–60	.BULB (6V–18W)	1	

4. Applicable colours of graphics are represented in the "REMARKS" as shown below.

PART NO.	DESCRIPTION	Q'TY	REMARKS
2N4–24110–00–X5	FUEL TANK COMP.	2	MXR
3J1–24240–10	.GRAPHIC, FUEL TANK	1	FOR MXR

5. Note that the illustrations for reference in finding parts numbers are not to be used for assembling. When assembling, please use the applicable service manual.

6. The asterisk (*) before a reference number indicates modified items after the first edition.

CONTENTS

REMOTE CONTROL BOX 1 1
REMOTE CONTROL BOX 2 2
REMOTE CONTROL BOX 3 3
REMOTE CONTROL ASSY 1 4
REMOTE CONTROL ASSY 2 7
REMOTE CONTROL ASSY 3 10
REMOTE CONTROL ASSY 4 13
REMOTE CONTROL ASSY 5 16
REMOTE CONTROL ASSY 6 19
REMOTE CONTROL ASSY 7 22
REMOTE CONTROL CABLES 26
LAYOUT CHART 1 (SINGLE) 27
LAYOUT CHART 2 (TWIN) 28
LAYOUT CHART 3 (TRIPLE) 29
LAYOUT CHART 4 (QUAD) 30
DBW REMOTE CONTROL 1 (SINGLE) 31
DBW REMOTE CONTROL 2 (TWIN) 34
DBW REMOTE CONTROL 3 (TRIPLE) 38
DBW REMOTE CONTROL 4 (QUAD) 42
DBW REMOTE CONTROL 5 (QUAD) 46
LAYOUT CHART 5 (6X7) 47
DBW REMOTE CONTROL 6 (6X7) 48
SWITCH & PANEL 1 51
SWITCH & PANEL 2 52
SWITCH & PANEL 3 53
SWITCH & PANEL 4 54
SWITCH & PANEL 5 55
SWITCH & PANEL 6 56
SWITCH & PANEL 7 57
SWITCH & PANEL 8 58
SWITCH & PANEL 9 59
SWITCH & PANEL 10 60
SWITCH & PANEL 11 61
SWITCH & PANEL 12 62
SWITCH & PANEL 13 63
SWITCH & PANEL 14 64
SWITCH & PANEL 15 65
SWITCH & PANEL 16 66
SWITCH & PANEL 17 68
SWITCH & PANEL 18 69
SWITCH & PANEL 19 71
SWITCH & PANEL 20 72
WIRE HARNESS 1 73
WIRE HARNESS 2 74
ELECTRICAL DBW REMO-CON 1 76
ELECTRICAL DBW REMO-CON 2 77
REMO CON ATTACHMENT 1 78
REMO CON ATTACHMENT 2 79
REMO CON ATTACHMENT 3 80
REMO CON ATTACHMENT 4 81
REMO CON ATTACHMENT 5 83
REMO CON ATTACHMENT 6 84
REMO CON ATTACHMENT 7 85
REMO CON ATTACHMENT 8 86
REMO CON ATTACHMENT 9 87
STEERING HOOK 1 89
STEERING HOOK 2 90
STEERING HOOK 3 91
STEERING GUIDE 1 92
STEERING GUIDE 2 93
STEERING GUIDE 3 94
STEERING GUIDE 4 95
STEERING GUIDE 5 96
STEERING GUIDE 6 97
STEERING GUIDE 7 98
STEERING GUIDE 8 99
STEERING GUIDE 9 100
STEERING GUIDE 10 101
STEERING GUIDE 11 102
STEERING GUIDE 12 103

INDEX

NUMERICAL INDEX 104

REMOTE CONTROL BOX SPECIFICATION LIST (703 TYPE)

TYPE : 703	MECHANICAL SPECIFICATION									
PART NO.	LIST UP SEC.	THROTTLE MOTION		HANDLE POSITION		NEUTRAL LOCK	TIGHTENING		LEVER TYPE	
	FIG.NO-REF.NO.	PULL	PUSH	RIGHT	LEFT		BOLT,NUT	ROUND WOOD SCREW	SINGLE	TWIN
703-48210-21	1-1	○	*	○	*	○	○	*	○	*
703-48230-21		○	*	○	*	○	○	*	○	*
703-48250-21		○	*	○	*	○	○	*	○	*
703-48272-21		○	*	○	*	○	○	*	○	*
703-48201-21		*	○	○	*	○	○	*	○	*
703-48201-B1		*	○	○	*	○	○	*	○	*
703-48203-21		*	○	○	*	○	○	*	○	*
703-48205-21		*	○	○	*	○	○	*	○	*
703-48205-B1		*	○	○	*	○	○	*	○	*
703-48207-21		*	○	○	*	○	○	*	○	*
703-48206-20	1-2	*	○	○	*	○	○	*	○	*
703-48260-20		○	*	○	*	○	○	*	○	*

REMOTE CONTROL BOX SPECIFICATION LIST (703 TYPE)

TYPE : 703	ELECTRICAL SPECIFICATION								
PART NO.	ENGINE STOP SW.		MAIN SWITCH		PT/T SW.	WIRE HARNESS COUPLER TYPE	BUZZER		NEUTRAL SW.
	PULL PLATE	PUSH BUTTON	CHOKE MODEL	PRIME START MODEL			ANALOG	DIGITAL	
703-48210-21	688-82575-02	*	703-82510-44	*	*	10P	703-83383-11	*	703-82540-00
703-48230-21	688-82575-02	*	703-82510-34	*	*	7P	703-83383-11	*	703-82540-00
703-48250-21	688-82575-02	*	703-82510-44	*	703-82563-30	10P	703-83383-11	*	703-82540-00
703-48272-21	688-82575-02	*	703-82510-44	*	703-82563-20	10P	703-83383-11	*	703-82540-00
703-48201-21	688-82575-02	*	703-82510-44	*	*	10P	703-83383-11	*	703-82540-00
703-48201-B1	688-82575-02	*	*	703-82510-13	*	10P	703-83383-11	*	703-82540-00
703-48203-21	688-82575-02	*	703-82510-34	*	*	7P	703-83383-11	*	703-82540-00
703-48205-21	688-82575-02	*	703-82510-44	*	703-82563-30	10P	703-83383-11	*	703-82540-00
703-48205-B1	688-82575-02	*	*	703-82510-13	703-82563-30	10P	703-83383-11	*	703-82540-00
703-48207-21	688-82575-02	*	703-82510-44	*	703-82563-20	10P	703-83383-11	*	703-82540-00
703-48206-20	701-82575-53	*	*	*	*	2P	*	*	*
703-48260-20	701-82575-53	*	*	*	*	2P	*	*	*

703 REMOTE CONTROL

Part No.	Throttle		Choke	PTT	Coupler			Mount		Remarks
	Push	Pull			7-pin	10-pin	2-pin	R	L	
703-48210-21		1	1			1		1		
703-48230-21		1	1		1			1		For analog gauge only
703-48250-21		1	1	1		1		1		
703-48272-21		1	1	1		1		1		For additional trim SW
703-48201-21	1		1			1		1		
703-48201-B1	1					1		1		
703-48203-21	1		1		1			1		For analog gauge only
703-48205-21	1		1	1		1		1		
703-48205-B1	1			1		1		1		
703-48207-21	1		1	1		1		1		For additional trim SW
703-48206-20	1						1	1		Successor model of 701 RC
703-48260-20		1					1	1		Successor model of 701 RC
703-48290-01	Twin attachment kit									For twin engine application

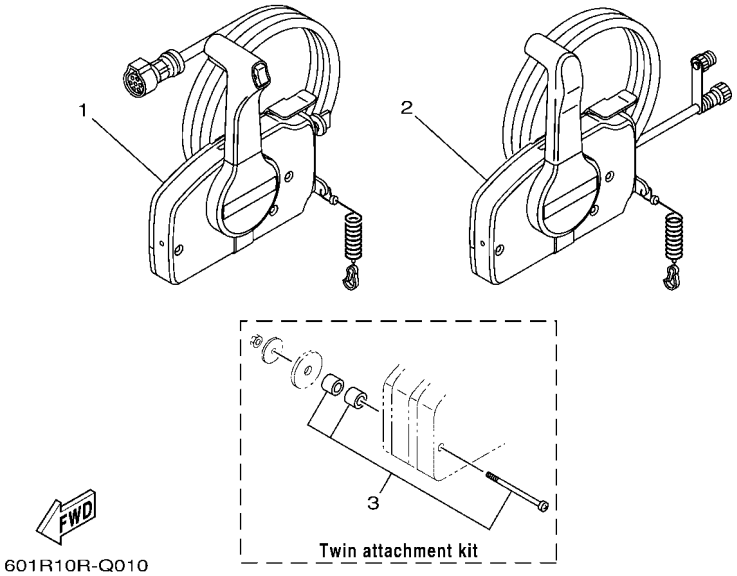

601R10R-Q010

FIG. 1 REMOTE CONTROL BOX 1

REF. NO.	PART NO.	DESCRIPTION	601R					REMARKS
1	703–48210–21	REMOTE CONTROL ASSY (10P)	1					UR WITHOUT PT/T SW.
	703–48230–21	REMOTE CONTROL ASSY (7P)	1					UR WITHOUT PT/T SW.
	703–48250–21	REMOTE CONTROL ASSY (10P, PTT)	1					UR WITH PT/T SW.
	703–48272–21	REMOTE CONTROL ASSY (10P, PTT)	1					UR WITH PT/T SW.
	703–48201–21	REMOTE CONTROL ASSY (10P)	1					UR WITHOUT PT/T SW.
	703–48201–B1	REMOTE CONTROL ASSY (10P)	1					UR WITHOUT PT/T SW.
	703–48203–21	REMOTE CONTROL ASSY (7P)	1					UR WITHOUT PT/T SW.
	703–48205–21	REMOTE CONTROL ASSY (10P, PTT)	1					UR WITH PT/T SW.
	703–48205–B1	REMOTE CONTROL ASSY (10P, PTT)	1					UR WITH PT/T SW.
	703–48207–21	REMOTE CONTROL ASSY (10P, PTT)	1					UR WITH PT/T SW.
2	703–48206–20	REMOTE CONTROL ASSY	1					UR WITHOUT PT/T SW.
	703–48260–20	REMOTE CONTROL ASSY	1					UR WITHOUT PT/T SW.
3	703–48290–01	TWIN ATTACHMENT	1					FOR TWIN

REMOTE CONTROL BOX SPECIFICATION LIST (704 TYPE)

TYPE : 704	MECHANICAL SPECIFICATION								
TYPE : 704 (SINGLE)	LIST UP SEC.	HANDLE POSITION		SHIFT MOTION		THROTTLE MOTION		LEVER TYPE	
PART NO.	FIG.NO.-REF.NO.	RIGHT	LEFT	PULL	PUSH	PULL	PUSH	SINGLE	TWIN
704-48203-P1	2-1	*	○	○	*	*	○	○	*
704-48205-P1		*	○	○	*	*	○	○	*
704-48206-P1		○	*	○	*	*	○	○	*
TYPE : 704 (TWIN)	LIST UP SEC.	HANDLE POSITION		SHIFT MOTION		THROTTLE MOTION		LEVER TYPE	
PART NO.	FIG.NO.-REF.NO.	RIGHT	LEFT	PULL	PUSH	PULL	PUSH	SINGLE	TWIN
704-48207-P1	2-2	*	*	○	*	*	○	*	○

REMOTE CONTROL BOX SPECIFICATION LIST (704 TYPE)

TYPE : 704	ELECTRICAL SPECIFICATION					
TYPE : 704 (SINGLE)	PT/T SW.			NEUTRAL SW.	CABLE TERMINAL	
PART NO.	BODY SW.	BODY SW.	GRIP SW.		MM	INCH
704-48203-P1	*	*	*	704-82540-20	*	○
704-48205-P1	*	*	704-82563-41	704-82540-20	*	○
704-48206-P1	*	*	704-82563-41	704-82540-20	*	○
TYPE : 704 (TWIN)	PT/T SW.			NEUTRAL SW.	CABLE TERMINAL	
PART NO.	BODY SW.	BODY SW.	GRIP SW.		MM	INCH
704-48207-P1	704-82563-H1	704-82563-J1	704-82563-51	704-82540-30	*	○

704 REMOTE CONTROL

Part No.	Throttle		PTT	Lever		
	Push	Pull		R	L	Twin
704-48203-P1	1				1	
704-48205-P1	1		1		1	
704-48206-P1	1		1	1		
704-48207-P1	1		1			1

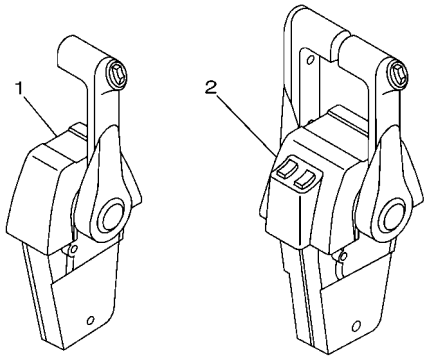

Part No.	Remarks
704-48293-20	Single
704-48293-30	Twin

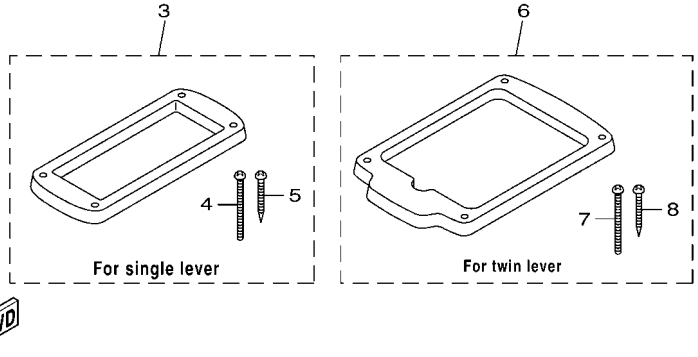

601R10R-Q020

FIG. 2 REMOTE CONTROL BOX 2

REF. NO.	PART NO.	DESCRIPTION	601R					REMARKS
1	704–48203–P1	REMOTE CONTROL ASSY (RIGHT)	1					UR WITHOUT PT/T SW.
	704–48205–P1	REMOTE CONTROL ASSY (RIGHT)	1					UR WITH PT/T SW.
	704–48206–P1	REMOTE CONTROL ASSY (LEFT)	1					UR WITH PT/T SW.
2	704–48207–P1	REMOTE CONTROL ASSY	1					WITH PT/T SW.
3	704–48293–20	SPACER, REMOTE CONTROL	1					FOR SINGLE
4	98580–05060	.SCREW, PAN HEAD	4					
5	97780–50145	.SCREW, TAPPING	4					
6	704–48293–30	SPACER, REMOTE CONTROL	1					FOR TWIN
7	98580–05060	.SCREW, PAN HEAD	4					
8	97780–50145	.SCREW, TAPPING	4					

REMOTE CONTROL BOX SPECIFICATION LIST (6X3/6X5 TYPE)

SIDE MOUNT	MECHANICAL SPECIFICATION									
TYPE : 6X3 (SINGLE)	LIST UP SEC.	HANDLE POSITION		SHIFT MOTION		THROTTLE MOTION		LEVER TYPE		
PART NO.	FIG.NO.-REF.NO.	RIGHT	LEFT	PULL	PUSH	PULL	PUSH	SINGLE	TWIN	TRIPLE
6X3-48206-02	3-1	○	*	○	*	*	○	○	*	*
TOP MOUNT	MECHANICAL SPECIFICATION									
TYPE : 6X5	LIST UP SEC.	HANDLE POSITION		SHIFT MOTION		THROTTLE MOTION		LEVER TYPE		
PART NO.	FIG.NO.-REF.NO.	RIGHT	LEFT	PULL	PUSH	PULL	PUSH	SINGLE	TWIN	TRIPLE
6X5-48207-02	3-2	○	*	*	○	○	*	*	*	○

REMOTE CONTROL BOX SPECIFICATION LIST (6X3/6X5 TYPE)

SIDE MOUNT	ELECTRICAL SPECIFICATION						
TYPE : 6X3 (SINGLE)	PT/T SW.				NEUTRAL SW.	CABLE TERMINAL	
PART NO.	BODY SW.	BODY SW.	BODY SW.	GRIP SW.		MM	INCH
6X3-48206-02	*	*	*	6X3-82563-01	704-82540-00	*	○
TOP MOUNT	ELECTRICAL SPECIFICATION						
TYPE : 6X5	PT/T SW.				NEUTRAL SW.	CABLE TERMINAL	
PART NO.	BODY SW.	BODY SW.	BODY SW.	GRIP SW.		MM	INCH
6X5-48207-02	6X5-82563-11	6X5-82563-21	6X5-82563-31	6X5-82563-01	6X5-82540-00	*	○

6X3 REMOTE CONTROL

Part No.	Throttle		PTT	Mount		Remarks
	Push	Pull		R	L	
6X3-48206-02	1		1	1		With emergency shut-off cord (2-pin coupler)

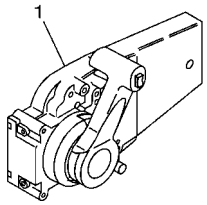

6X5 REMOTE CONTROL

Part No.	Throttle		PTT	Mount		Remarks
	Push	Pull		R	L	
6X5-48207-02	1		1	1		No wood tone

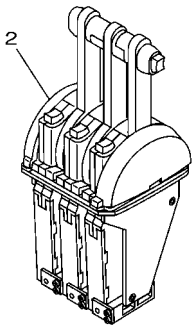

601R10R-Q030

FIG. 3 REMOTE CONTROL BOX 3

REF. NO.	PART NO.	DESCRIPTION	601R					REMARKS
1	6X3–48206–02	REMOTE CONTROL ASSY	1					WITH PT/T SW.
2	6X5–48207–02	REMOTE CONTROL ASSY	1					WITH PT/T SW.

703 REMOTE CONTROL (PULL TO OPEN TYPE)

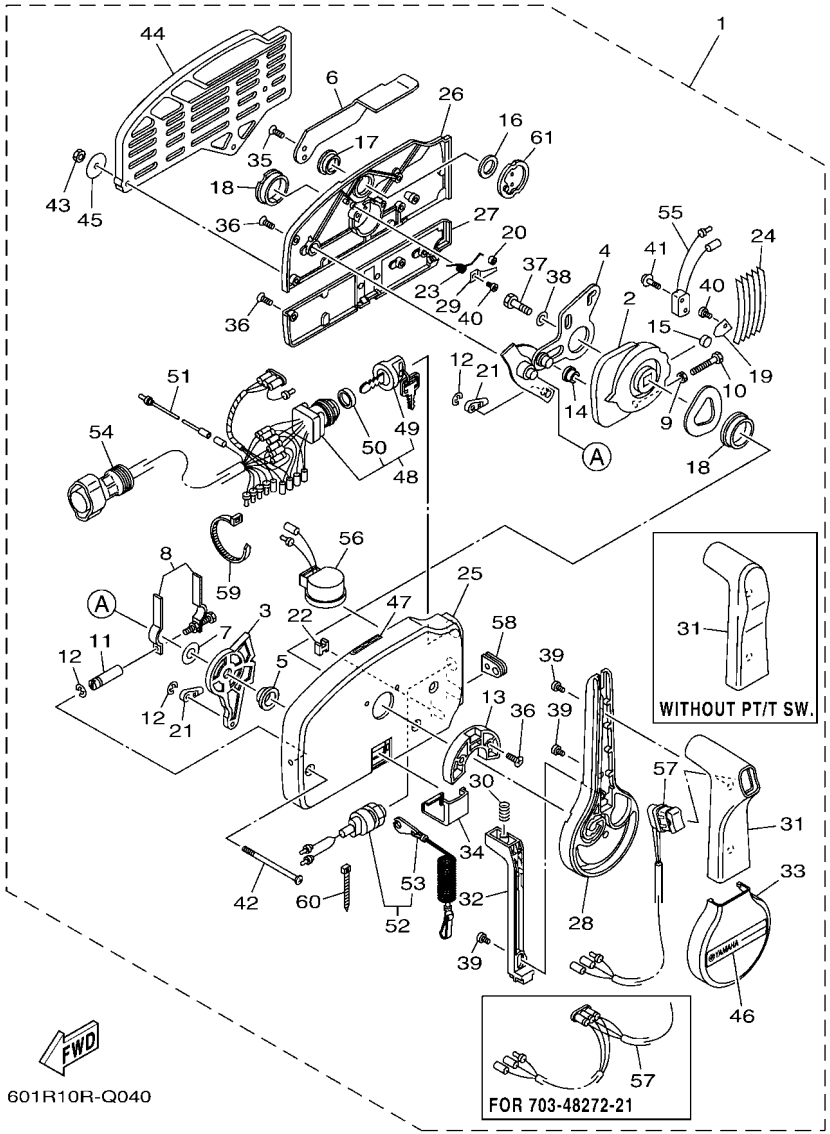

FIG. 4 REMOTE CONTROL ASSY 1

REF. NO.	PART NO.	DESCRIPTION	601R					REMARKS
1	703–48210–21	REMOTE CONTROL ASSY (10P)	1					UR WITHOUT PT/T SW.
	703–48230–21	REMOTE CONTROL ASSY (7P)	1					UR WITHOUT PT/T SW.
	703–48250–21	REMOTE CONTROL ASSY (10P, PTT)	1					UR WITH PT/T SW.
	703–48272–21	REMOTE CONTROL ASSY (10P, PTT)	1					UR WITH PT/T SW.
2	703–48232–00	.GEAR	1					
3	703–48271–00	.ARM, SHIFT	1					
4	703–48261–11	.ARM, THROTTLE	1					
5	703–48235–00	.BUSHING	1					
6	703–48152–10	.KNOB, FREE ACCEL.	1					
7	703–48268–00	.SPACER	1					
8	703–48264–00	.FRICTION, THROTTLE	1					
9	95380–05600	.NUT	1					
10	97380–05025	.BOLT	1					
11	703–48265–10	.SHAFT, FRICTION	1					
12	93430–06024	.CIRCLIP	3					
13	703–48245–00	.PLATE, LOCK	1					
14	703–48252–00	.ROLLER, CAM	1					
15	701–48248–00	.ROLLER, FREE ACCEL.	1					
16	703–48198–00	.WASHER, WAVE	1					
17	703–48243–00	.BUSHING	1					
18	703–48236–00	.BUSHING 1	2					
19	703–48189–00	.RETAINER	1					
20	703–48234–00	.ROLLER, DETENT	1					
21	703–48345–01	.CABLE END, REMOTE CONTROL 2	2					
22	703–48358–00	.ANCHOR, CABLE	1					
23	703–48244–00	.SPRING, FREE ACCEL.	1					
24	703–48238–00	.SPRING, DETENT	5					

703 REMOTE CONTROL (PULL TO OPEN TYPE)

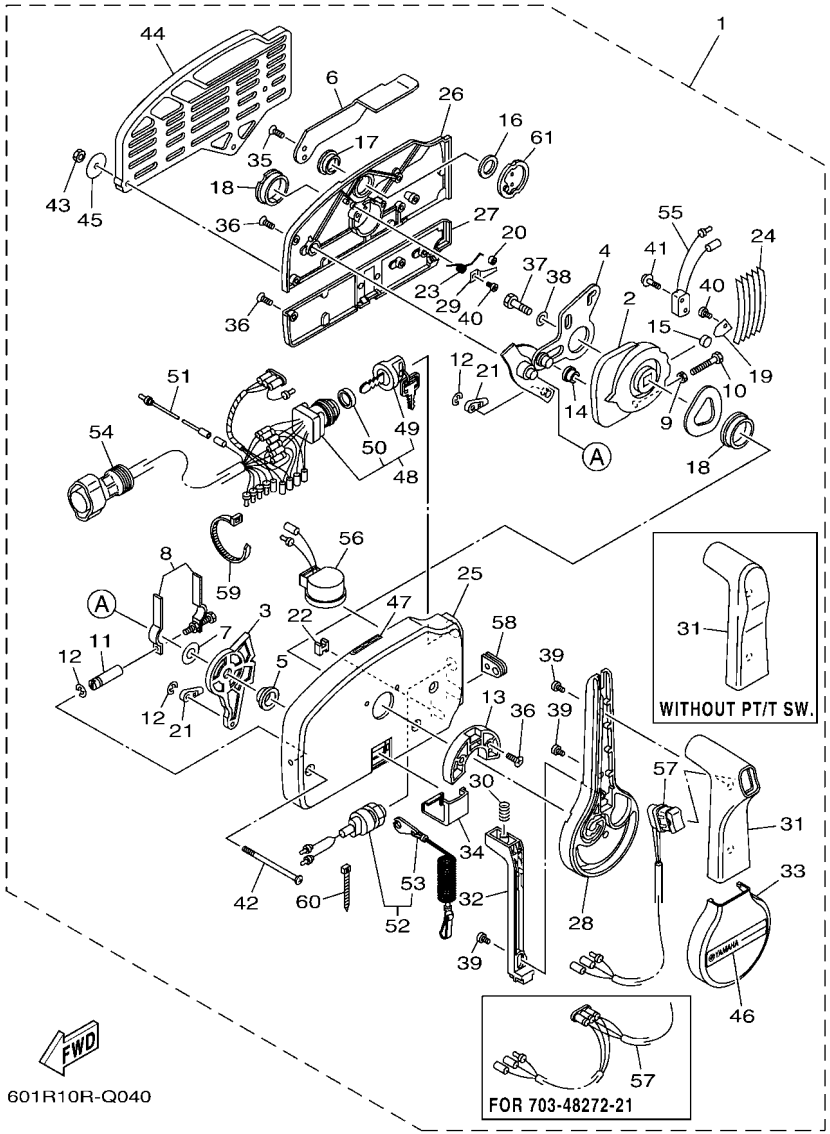

FIG. 4 REMOTE CONTROL ASSY 1

REF. NO.	PART NO.	DESCRIPTION	601R					REMARKS
25	703–48211–10	.HOUSING,1	1					
26	703–48212–10	.BACK PLATE 1	1					
27	703–48213–10	.BACK PLATE 2	1					
28	703–48221–10	.LEVER, CONTROL	1					
29	703–48246–00	.SPACER	1					
30	703–48227–00	.SPRING, NEUTRAL LOCK	1					
31	703–48222–20	.GRIP, CONTROL LEVER	1					WITH PT/T SW.
	703–48222–30	.GRIP, CONTROL LEVER	1					WITHOUT PT/T SW.
32	703–48223–10	.LOCK, NEUTRAL	1					
33	703–48225–10	.COVER	1					
34	703–48219–10	.COVER, LEAD	1					
35	703–48281–00	.SCREW	2					
36	703–44189–20	.SCREW	7					
37	97380–08030	.BOLT	1					
38	92990–08600	.WASHER, PLATE	1					
39	703–48128–10	.SCREW 2	3					
40	98580–04006	.SCREW, PAN HEAD	2					
41	703–48129–00	.SCREW 3	2					
42	703–44189–30	.SCREW	3					
43	95380–06600	.NUT, HEXAGON	3					
44	703–48293–10	.SPACER, REMOTE CONTROL	1					SINGLE
45	701–48287–00	.WASHER	3					
46	703–48215–10	.GRAPHIC	1					
47	6X3–44191–00	.INDICATOR, SHIFT	1					
48	703–82510–44	.MAIN SWITCH ASSY	1					EXCEPT 703-48230-21
	703–82510–34	.MAIN SWITCH ASSY	1					FOR 703-48230-21
49	703–82577–00	..CAP, KEY	1					

703 REMOTE CONTROL (PULL TO OPEN TYPE)

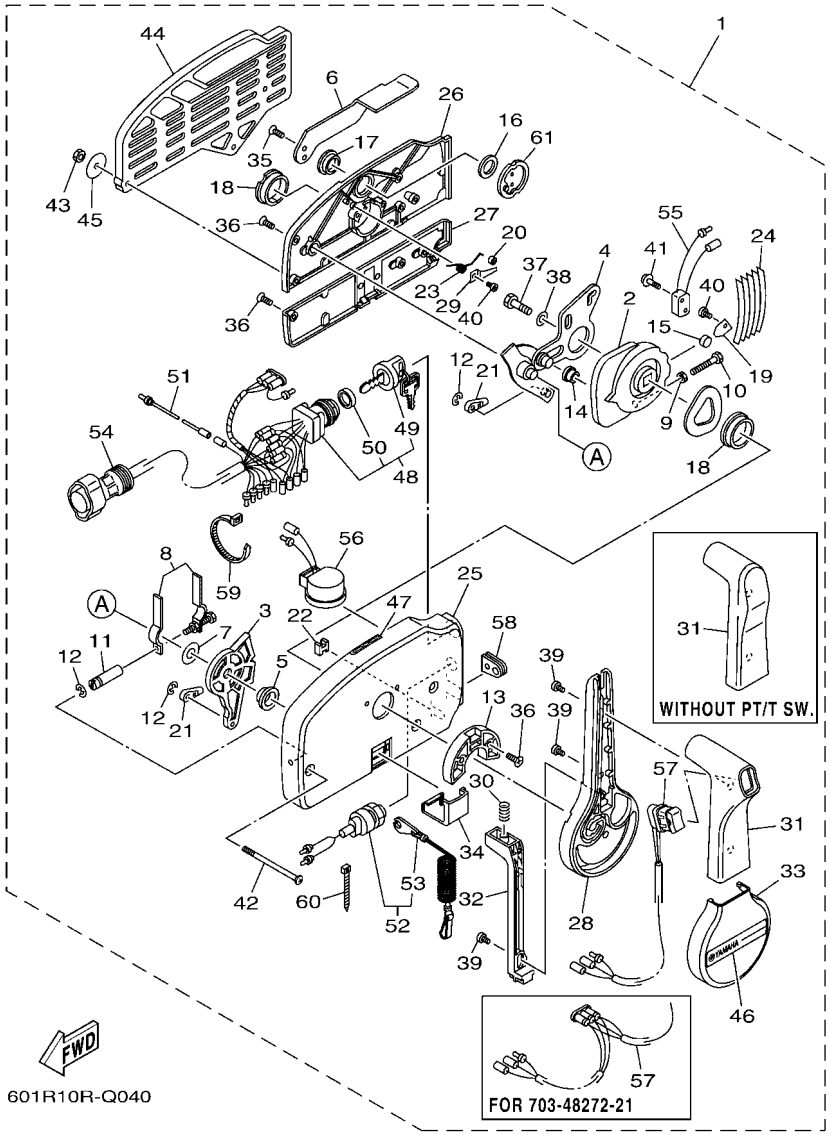

FIG. 4 REMOTE CONTROL ASSY 1

REF. NO.	PART NO.	DESCRIPTION	601R					REMARKS
50	6K1–82532–00	..CAP	1					
51	703–82531–00	.WIRE, LEAD (L70)	1					
52	688–82575–02	.ENGINE STOP SWITCH ASSY	1					
53	682–82556–00	..LANYARD, STOP SWITCH	1					
54	688–8258A–20	.EXTENSION, WIRE HARNESS (4.9M)	1					EXCEPT 703-48230-21 (10P)
	688–82586–21	.EXTENSION, WIRE HARNESS (4.9M)	1					FOR 703-48230-21 (7P)
55	703–82540–00	.NEUTRAL SWITCH ASSY	1					
56	703–83383–11	.BUZZER	1					
57	703–82563–30	.TRIM & TILT SWITCH ASSY	1					FOR 703-48250-21 WITH PT/T SW.
	703–82563–20	.TRIM & TILT SWITCH ASSY	1					FOR 703-48272-21 WITH PT/T SW.
58	703–48284–00	.GROMMET	1					EXCEPT 703-48272-21
	703–48284–10	.GROMMET	1					FOR 703-48272-21
59	703–82591–00	.BAND	1					
60	703–82592–00	.BAND	1					
61	703–48153–00	.SHAFT, FREE ACCEL.	1					

FIG. 5 REMOTE CONTROL ASSY 2

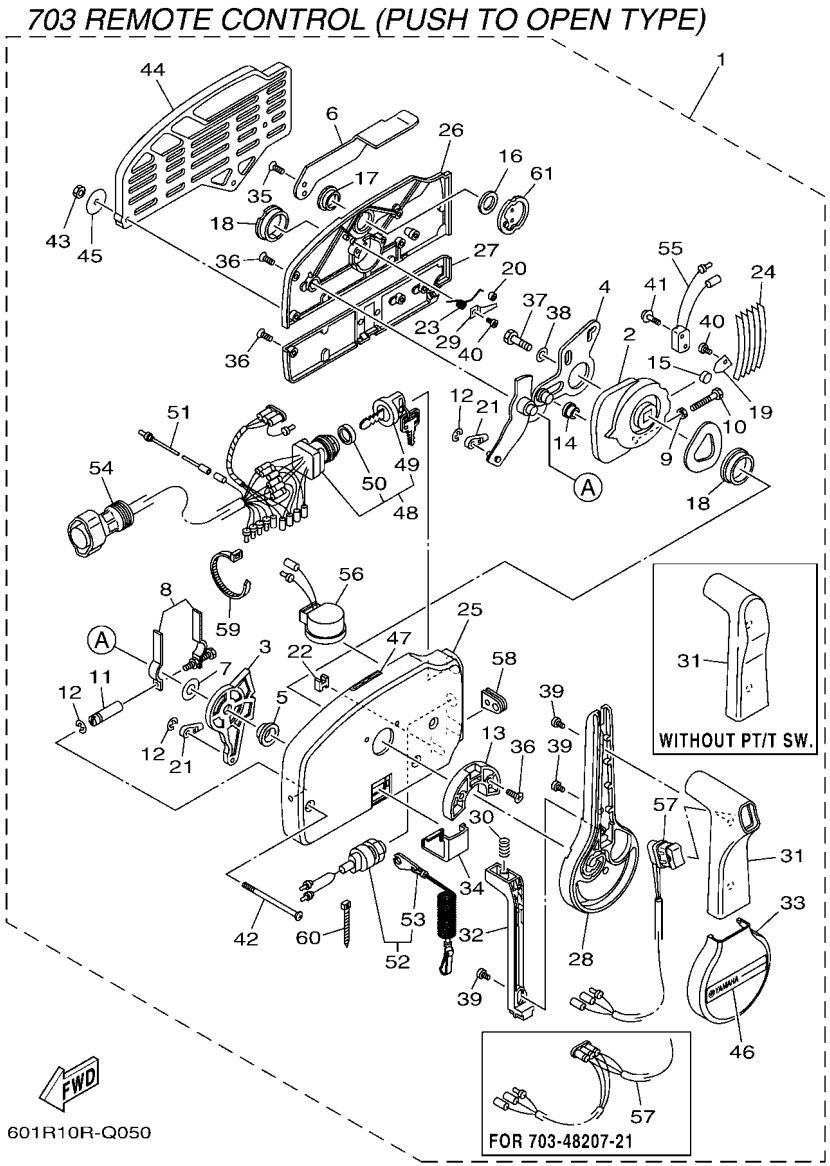

*1: FOR 703-48201-21/ 703-48205-21/ 703-48207-21
*2: FOR 703-48201-B1/ 703-48205-B1

REF. NO.	PART NO.	DESCRIPTION	601R					REMARKS
1	703–48201–21	REMOTE CONTROL ASSY (10P)	1					UR WITHOUT PT/T SW.
	703–48201–B1	REMOTE CONTROL ASSY (10P)	1					UR WITHOUT PT/T SW.
	703–48203–21	REMOTE CONTROL ASSY (7P)	1					UR WITHOUT PT/T SW.
	703–48205–21	REMOTE CONTROL ASSY (10P, PTT)	1					UR WITH PT/T SW.
	703–48205–B1	REMOTE CONTROL ASSY (10P, PTT)	1					UR WITH PT/T SW.
	703–48207–21	REMOTE CONTROL ASSY (10P, PTT)	1					UR WITH PT/T SW.
2	703–48232–00	.GEAR	1					
3	703–48271–00	.ARM, SHIFT	1					
4	703–48261–01	.ARM, THROTTLE	1					
5	703–48235–00	.BUSHING	1					
6	703–48152–10	.KNOB, FREE ACCEL.	1					
7	703–48268–00	.SPACER	1					
8	703–48264–00	.FRICTION, THROTTLE	1					
9	95380–05600	.NUT	1					
10	97380–05025	.BOLT	1					
11	703–48265–10	.SHAFT, FRICTION	1					
12	93430–06024	.CIRCLIP	3					
13	703–48245–00	.PLATE, LOCK	1					
14	703–48252–00	.ROLLER, CAM	1					
15	701–48248–00	.ROLLER, FREE ACCEL.	1					
16	703–48198–00	.WASHER, WAVE	1					
17	703–48243–00	.BUSHING	1					
18	703–48236–00	.BUSHING 1	2					
19	703–48189–00	.RETAINER	1					
20	703–48234–00	.ROLLER, DETENT	1					
21	703–48345–01	.CABLE END, REMOTE CONTROL 2	2					
22	703–48358–00	.ANCHOR, CABLE	1					

703 REMOTE CONTROL (PUSH TO OPEN TYPE)

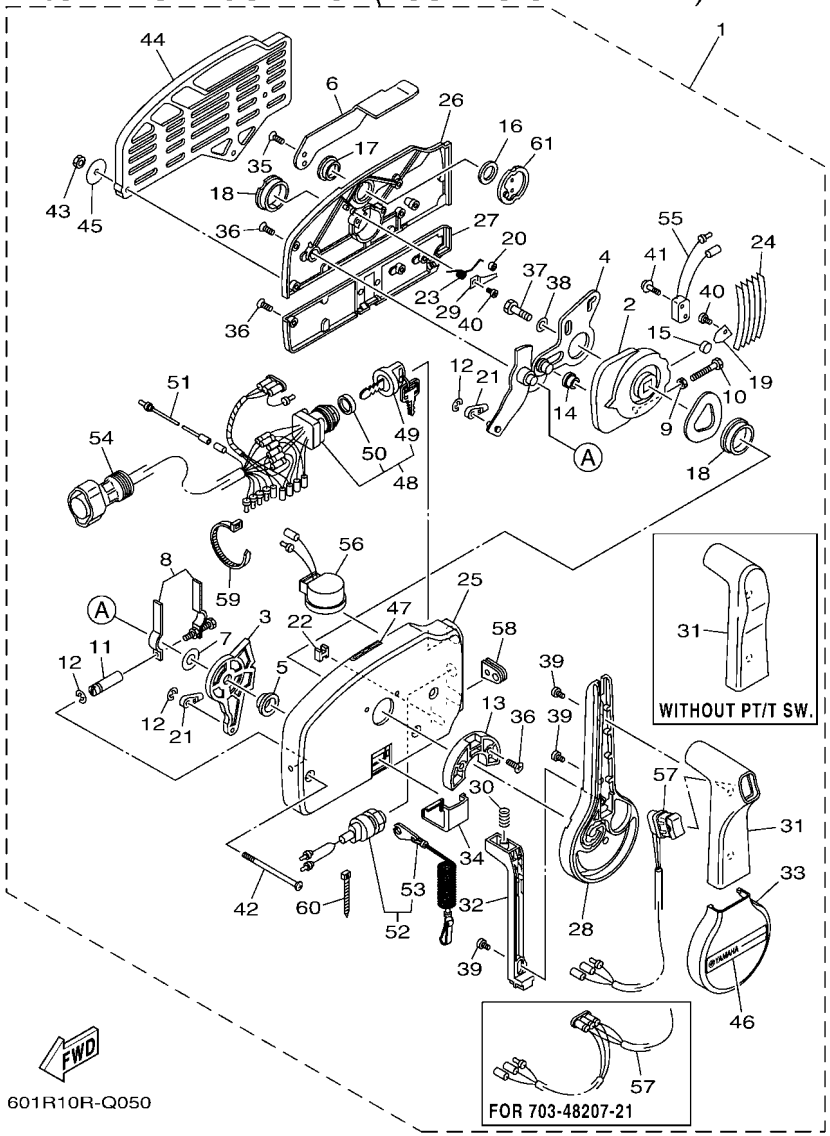

*1: FOR 703-48201-21/ 703-48205-21/ 703-48207-21
*2: FOR 703-48201-B1/ 703-48205-B1

FIG. 5 REMOTE CONTROL ASSY 2

REF. NO.	PART NO.	DESCRIPTION	601R					REMARKS
23	703–48244–00	.SPRING, FREE ACCEL.	1					
24	703–48238–00	.SPRING, DETENT	5					
25	703–48211–10	.HOUSING,1	1					
26	703–48212–10	.BACK PLATE 1	1					
27	703–48213–10	.BACK PLATE 2	1					
28	703–48221–10	.LEVER, CONTROL	1					
29	703–48246–00	.SPACER	1					
30	703–48227–00	.SPRING, NEUTRAL LOCK	1					
31	703–48222–20	.GRIP, CONTROL LEVER	1					WITH PT/T SW.
	703–48222–30	.GRIP, CONTROL LEVER	1					WITHOUT PT/T SW.
32	703–48223–10	.LOCK, NEUTRAL	1					
33	703–48225–10	.COVER	1					
34	703–48219–10	.COVER, LEAD	1					
35	703–48281–00	.SCREW	2					
36	703–44189–20	.SCREW	7					
37	97380–08030	.BOLT	1					
38	92990–08600	.WASHER, PLATE	1					
39	703–48128–10	.SCREW 2	3					
40	98580–04006	.SCREW, PAN HEAD	2					
41	703–48129–00	.SCREW 3	2					
42	703–44189–30	.SCREW	3					
43	95380–06600	.NUT, HEXAGON	3					
44	703–48293–10	.SPACER, REMOTE CONTROL	1					SINGLE
45	701–48287–00	.WASHER	3					
46	703–48215–10	.GRAPHIC	1					
47	6X3–44191–00	.INDICATOR, SHIFT	1					
48	703–82510–44	.MAIN SWITCH ASSY	1					*1

703 REMOTE CONTROL (PUSH TO OPEN TYPE)

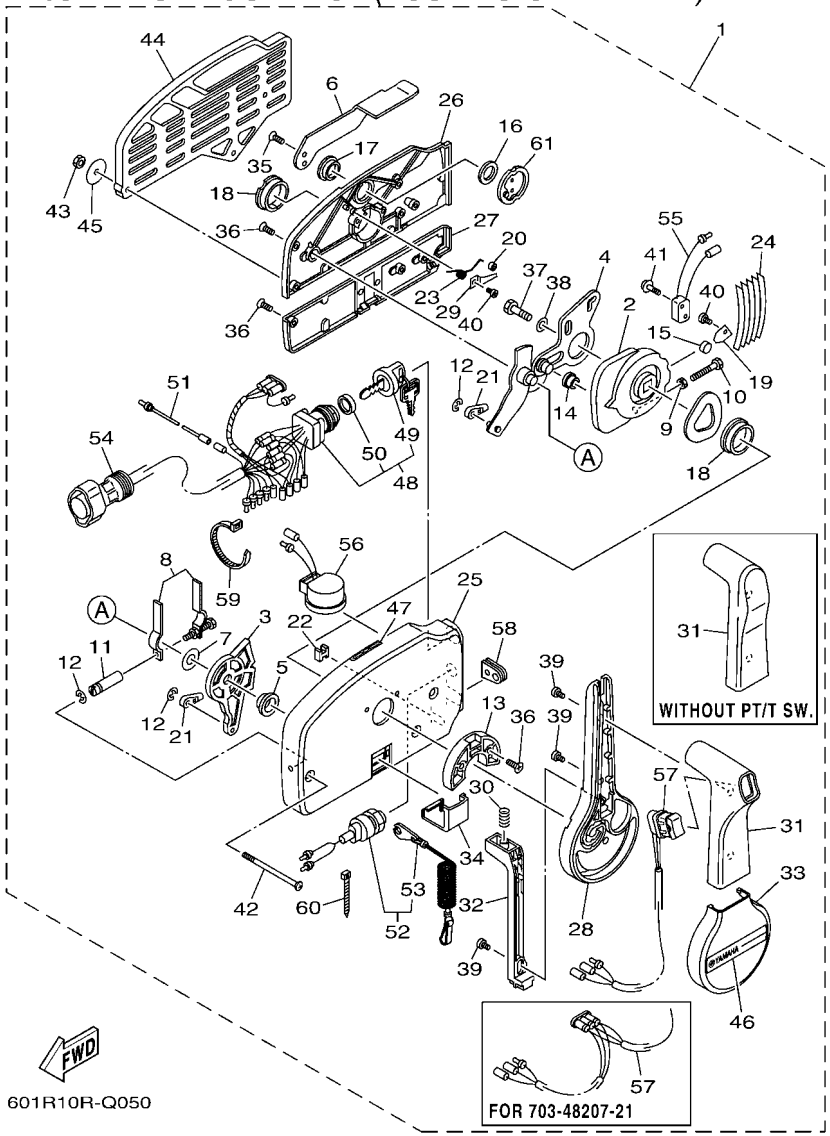

*1: FOR 703-48201-21/ 703-48205-21/ 703-48207-21
*2: FOR 703-48201-B1/ 703-48205-B1

FIG. 5 REMOTE CONTROL ASSY 2

REF. NO.	PART NO.	DESCRIPTION	601R					REMARKS
48	703–82510–13	.MAIN SWITCH ASSY	1					*2
	703–82510–34	.MAIN SWITCH ASSY	1					FOR 703-48203-21
49	703–82577–00	..CAP, KEY	1					FOR 703-82510-44/34
	676–82577–01	..CAP, KEY	1					FOR 703-82510-13
50	6K1–82532–00	..CAP	1					FOR 703-82510-44/34
	703–82532–00	..CAP	1					FOR 703-82510-13
51	703–82531–00	.WIRE, LEAD (L70)	1					
52	688–82575–02	.ENGINE STOP SWITCH ASSY	1					
53	682–82556–00	..LANYARD, STOP SWITCH	1					
54	688–8258A–20	.EXTENSION, WIRE HARNESS (4.9M)	1					EXCEPT 703-48203-21 (10P)
	688–82586–21	.EXTENSION, WIRE HARNESS (4.9M)	1					FOR 703-48203-21 (7P)
55	703–82540–00	.NEUTRAL SWITCH ASSY	1					
56	703–83383–11	.BUZZER	1					
57	703–82563–30	.TRIM & TILT SWITCH ASSY	1					FOR 703-48205-21/B1 WITH PT/T SW.
	703–82563–20	.TRIM & TILT SWITCH ASSY	1					FOR 703-48207-21/ WITH PT/T SW.
58	703–48284–00	.GROMMET	1					EXCEPT 703-48207-21
	703–48284–10	.GROMMET	1					FOR 703-48207-21
59	703–82591–00	.BAND	1					
60	703–82592–00	.BAND	1					
61	703–48153–00	.SHAFT, FREE ACCEL.	1					

703 REMOTE CONTROL
Successor model of 701 REMOTE CONTROL

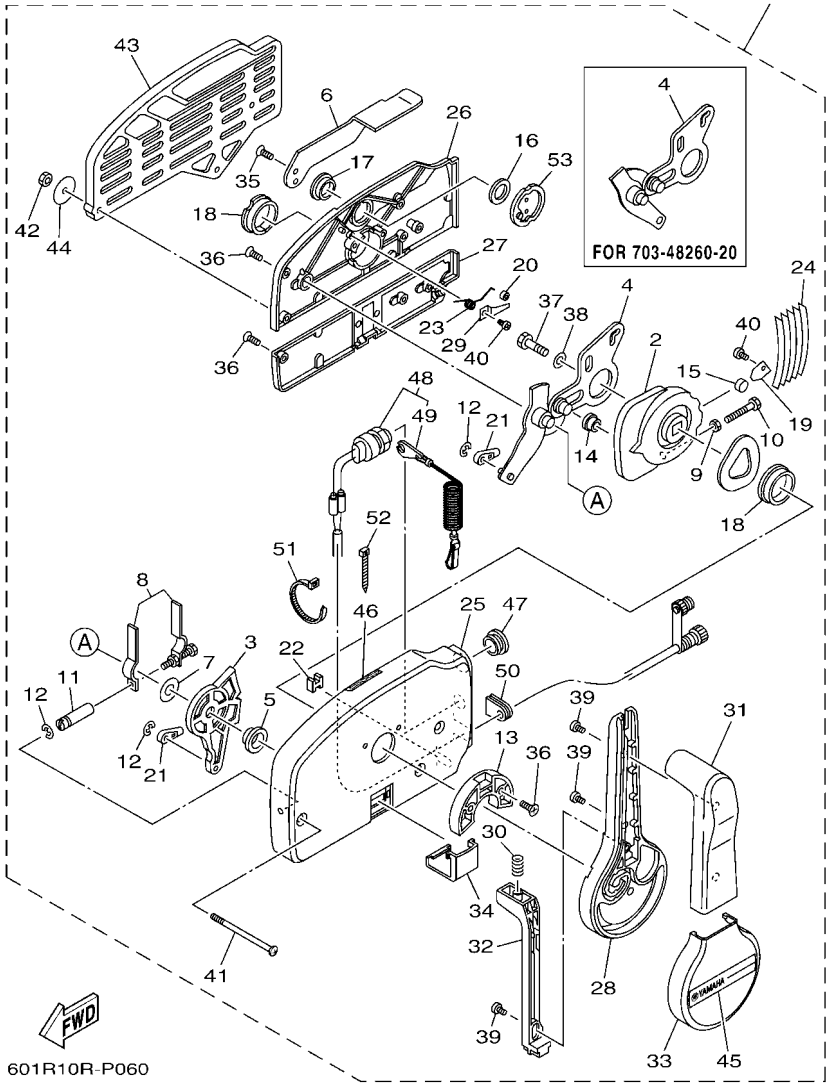

FIG. 6 REMOTE CONTROL ASSY 3

REF. NO.	PART NO.	DESCRIPTION	601R					REMARKS
1	703–48206–20	REMOTE CONTROL ASSY	1					UR WITHOUT PT/T SW.
	703–48260–20	REMOTE CONTROL ASSY	1					UR WITHOUT PT/T SW.
2	703–48232–00	.GEAR	1					
3	703–48271–00	.ARM, SHIFT	1					
4	703–48261–01	.ARM, THROTTLE	1					FOR 703-48206-20
	703–48261–11	.ARM, THROTTLE	1					FOR 703-48260-20
5	703–48235–00	.BUSHING	1					
6	703–48152–10	.KNOB, FREE ACCEL.	1					
7	703–48268–00	.SPACER	1					
8	703–48264–00	.FRICTION, THROTTLE	1					
9	95380–05600	.NUT	1					
10	97380–05025	.BOLT	1					
11	703–48265–00	.SHAFT, FRICTION	1					
12	93430–06024	.CIRCLIP	3					
13	703–48245–00	.PLATE, LOCK	1					
14	703–48252–00	.ROLLER, CAM	1					
15	701–48248–00	.ROLLER, FREE ACCEL.	1					
16	703–48198–00	.WASHER, WAVE	1					
17	703–48243–00	.BUSHING	1					
18	703–48236–00	.BUSHING 1	2					
19	703–48189–00	.RETAINER	1					
20	703–48234–00	.ROLLER, DETENT	1					
21	703–48345–01	.CABLE END, REMOTE CONTROL 2	2					
22	703–48358–00	.ANCHOR, CABLE	1					
23	703–48244–00	.SPRING, FREE ACCEL.	1					
24	703–48238–00	.SPRING, DETENT	5					
25	703–48211–10	.HOUSING,1	1					

703 REMOTE CONTROL
Successor model of 701 REMOTE CONTROL

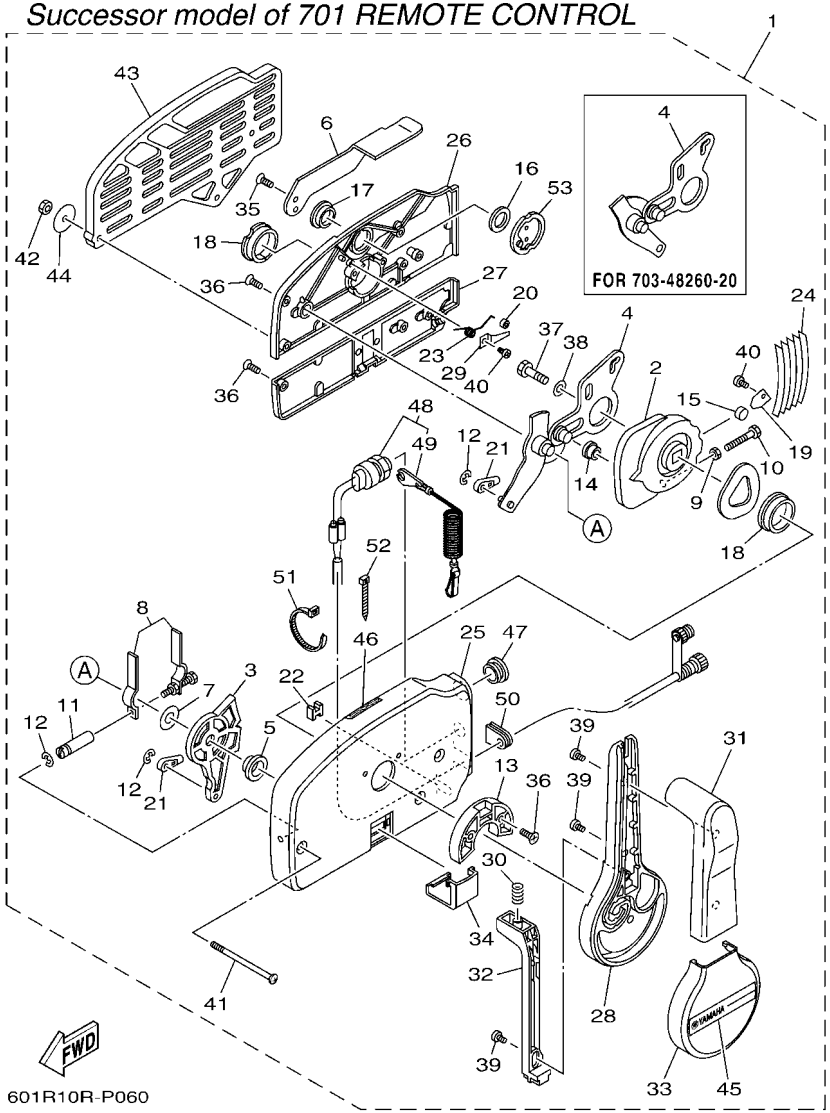

FIG. 6 REMOTE CONTROL ASSY 3

REF. NO.	PART NO.	DESCRIPTION	601R					REMARKS
26	703–48212–10	.BACK PLATE 1	1					
27	703–48213–10	.BACK PLATE 2	1					
28	703–48221–10	.LEVER, CONTROL	1					
29	703–48246–00	.SPACER	1					
30	703–48227–00	.SPRING, NEUTRAL LOCK	1					
31	703–48222–30	.GRIP, CONTROL LEVER	1					WITHOUT PT/T SW.
32	703–48223–10	.LOCK, NEUTRAL	1					
33	703–48225–10	.COVER	1					
34	703–48219–10	.COVER, LEAD	1					
35	703–48281–00	.SCREW	2					
36	703–44189–20	.SCREW	7					
37	97380–08030	.BOLT	1					
38	92990–08600	.WASHER, PLATE	1					
39	703–48128–10	.SCREW 2	3					
40	98580–04006	.SCREW, PAN HEAD	2					
41	703–44189–30	.SCREW	3					
42	95380–06600	.NUT, HEXAGON	3					
43	703–48293–10	.SPACER, REMOTE CONTROL	1					SINGLE
44	701–48287–00	.WASHER	3					
45	703–48215–10	.GRAPHIC	1					
46	6X3–44191–00	.INDICATOR, SHIFT	1					
47	703–48138–00	.CAP, LOCK ARM	1					
48	701–82575–53	.ENGINE STOP SWITCH ASSY	1					
49	682–82556–00	..LANYARD, STOP SWITCH	1					
50	703–48284–20	.GROMMET	1					
51	703–82591–00	.BAND	1					
52	703–82592–00	.BAND	1					

703 REMOTE CONTROL
Successor model of 701 REMOTE CONTROL

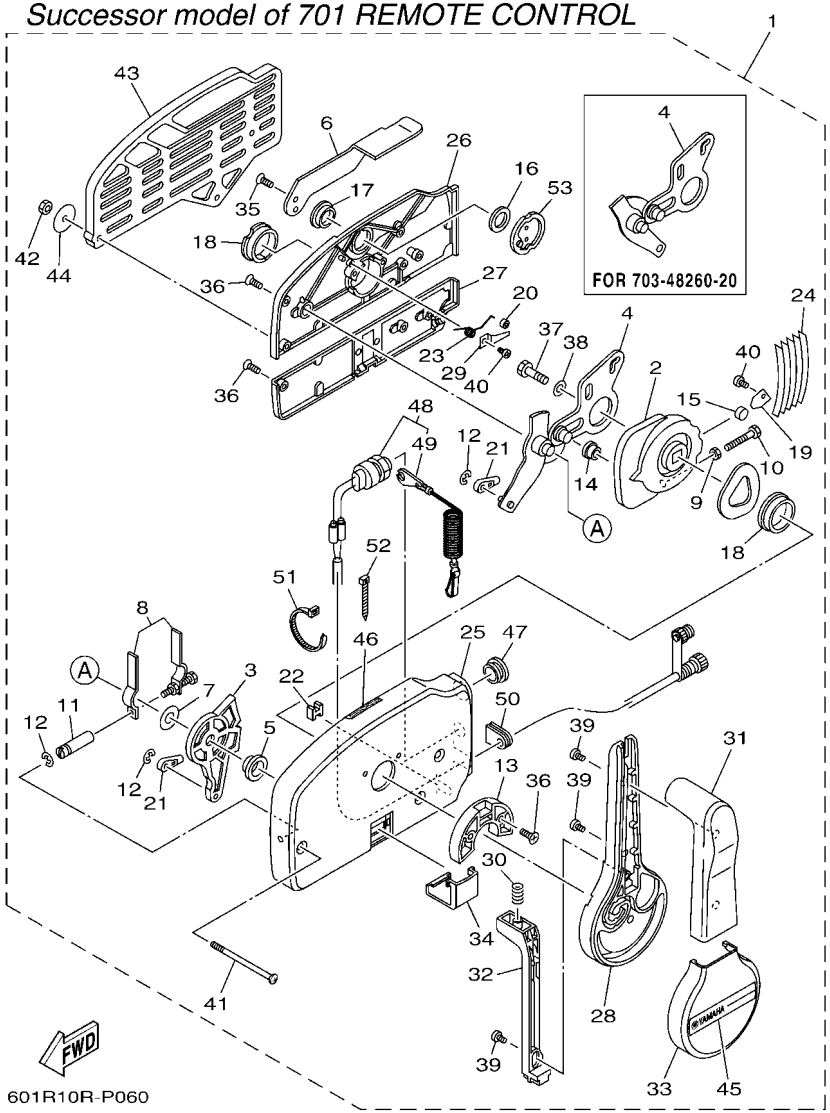

FIG. 6 REMOTE CONTROL ASSY 3

REF. NO.	PART NO.	DESCRIPTION	601R					REMARKS
53	703–48153–00	.SHAFT, FREE ACCEL.	1					

704 REMOTE CONTROL (PREMIUM SINGLE)

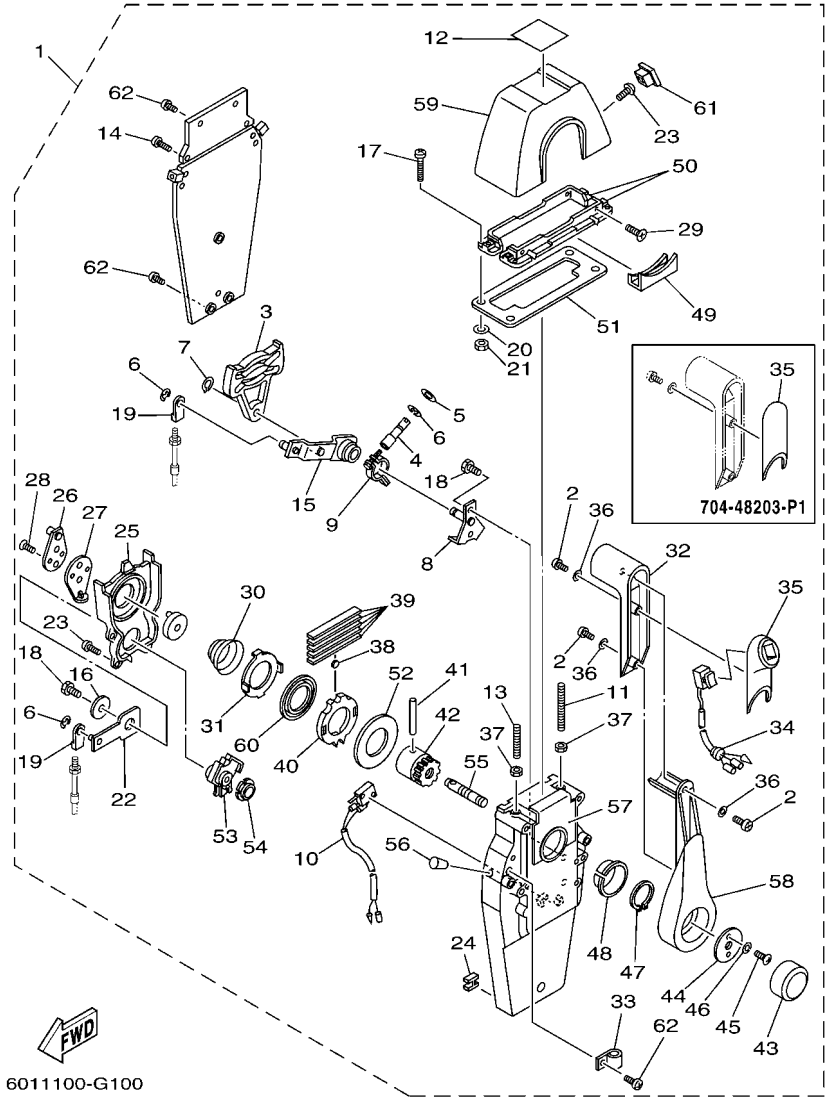

FIG. 7 REMOTE CONTROL ASSY 4

REF. NO.	PART NO.	DESCRIPTION	601R					REMARKS
1	704–48203–P1	REMOTE CONTROL ASSY (RIGHT)	1					UR WITHOUT PT/T SW.
	704–48205–P1	REMOTE CONTROL ASSY (RIGHT)	1					UR WITH PT/T SW.
	704–48206–P1	REMOTE CONTROL ASSY (LEFT)	1					UR WITH PT/T SW.
2	704–48129–00	.SCREW 3	3					
3	EL8–48251–00	.PLATE, CAM	1					
4	704–48265–00	.SHAFT, FRICTION	1					
5	701–48246–00	.SPACER	1					
6	93430–06024	.CIRCLIP	4					
7	EL8–48259–00	.CIRCLIP 1	1					
8	704–48262–00	.SHAFT, THROTTLE	1					
9	704–48264–00	.THROTTLE, FRICTION	1					
10	704–82540–20	.NEUTRAL SWITCH ASSY	1					
11	EL8–48281–00	.SCREW	1					
12	704–48215–21	.GRAPHIC	1					
13	704–48281–00	.SCREW	1					
14	97890–05025	.SCREW, PAN HEAD	2					
15	704–48261–00	.ARM, THROTTLE	1					
16	EL8–48191–00	.WASHER 1	1					
17	704–48283–00	.SCREW	4					
18	97380–06018	.BOLT	3					
19	703–48345–01	.CABLE END, REMOTE CONTROL 2	2					
20	704–48287–00	.WASHER	4					
21	95380–05600	.NUT	4					
22	704–48271–00	.ARM, SHIFT	1					
23	EL8–48127–00	.SCREW 1	10					
24	703–48358–00	.ANCHOR, CABLE	1					
25	704–48231–00	.HOUSING, GEAR	1					

704 REMOTE CONTROL (PREMIUM SINGLE)

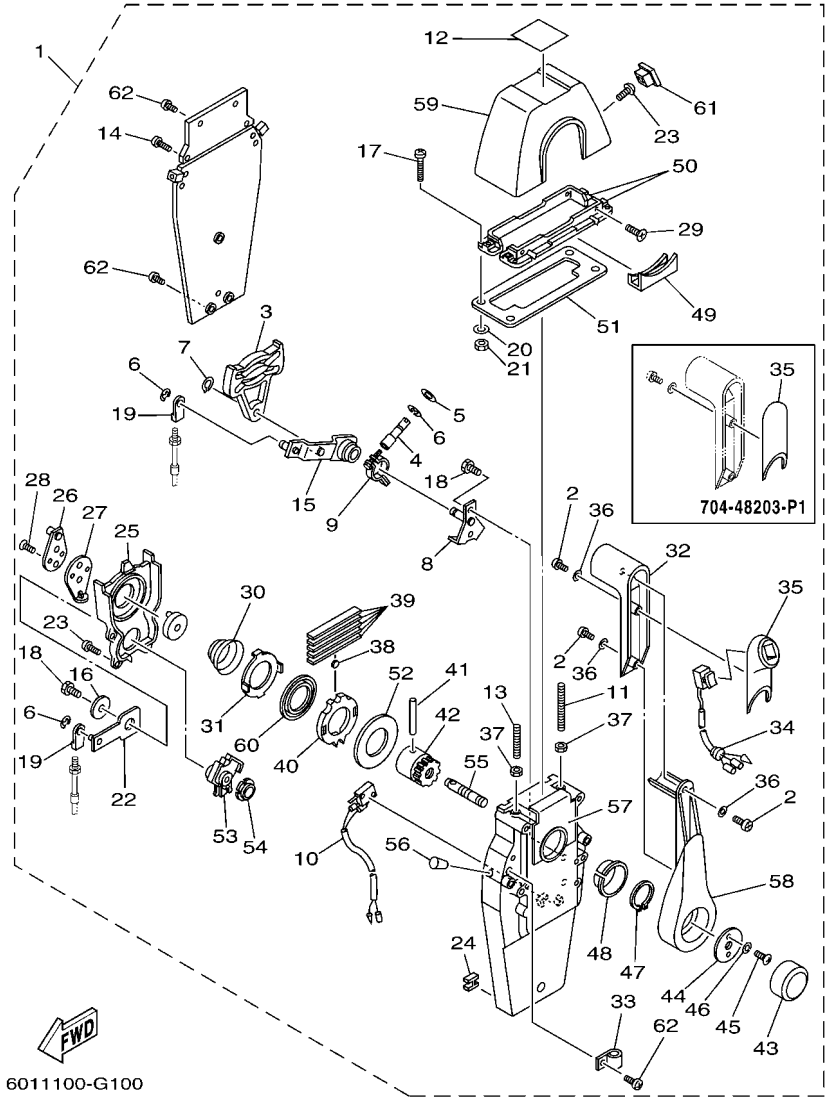

FIG. 7 REMOTE CONTROL ASSY 4

REF. NO.	PART NO.	DESCRIPTION	601R					REMARKS
26	EL8–48241–00	.ARM, DRIVE	1					
27	EL8–48254–00	.STOPPER, THROTTLE ADJUSTING	1					
28	92780–06020	.SCREW, FLAT HEAD	2					
29	98780–05018	.SCREW, FLAT HEAD	4					
30	EL8–48244–00	.SPRING, FREE ACCEL.	1					
31	EL8–48245–00	.PLATE, LOCK	1					
32	704–48222–P0	.GRIP, CONTROL LEVER	1					
33	704–82594–00	.CLAMP	1					
34	704–82563–41	.TRIM & TILT SWITCH ASSY	1					WITH PT/T SW.
35	704–48229–R0	.GRIP, CONTROL LEVER	1					WITHOUT PT/T SW.
	704–48229–P1	.GRIP, CONTROL LEVER	1					WITH PT/T SW.
36	92990–05300	.WASHER, INTERNAL TOOTH	3					
37	95380–06600	.NUT, HEXAGON	2					
38	701–48248–00	.ROLLER, FREE ACCEL.	1					
39	704–48238–00	.SPRING, DETENT	5					
40	704–48232–P1	.GEAR	1					
41	EL8–48164–00	.PIN 2	1					
42	704–48242–10	.SHAFT, DRIVE	1					
43	6X3–48225–20	.COVER	1					
44	704–48192–00	.WASHER 2	1					
45	97890–06018	.SCREW, PAN HEAD	2					
46	92990–06300	.WASHER, INTERNAL TOOTH	2					
47	EL8–48279–00	.CIRCLIP 2	1					
48	704–48234–00	.BUSHING 1	1					
49	704–48219–P0	.COVER, LEAD	1					
50	704–48144–10	.PLATE, STOPPER 2	2					
51	704–48176–00	.GROMMET	1					

704 REMOTE CONTROL (PREMIUM SINGLE)

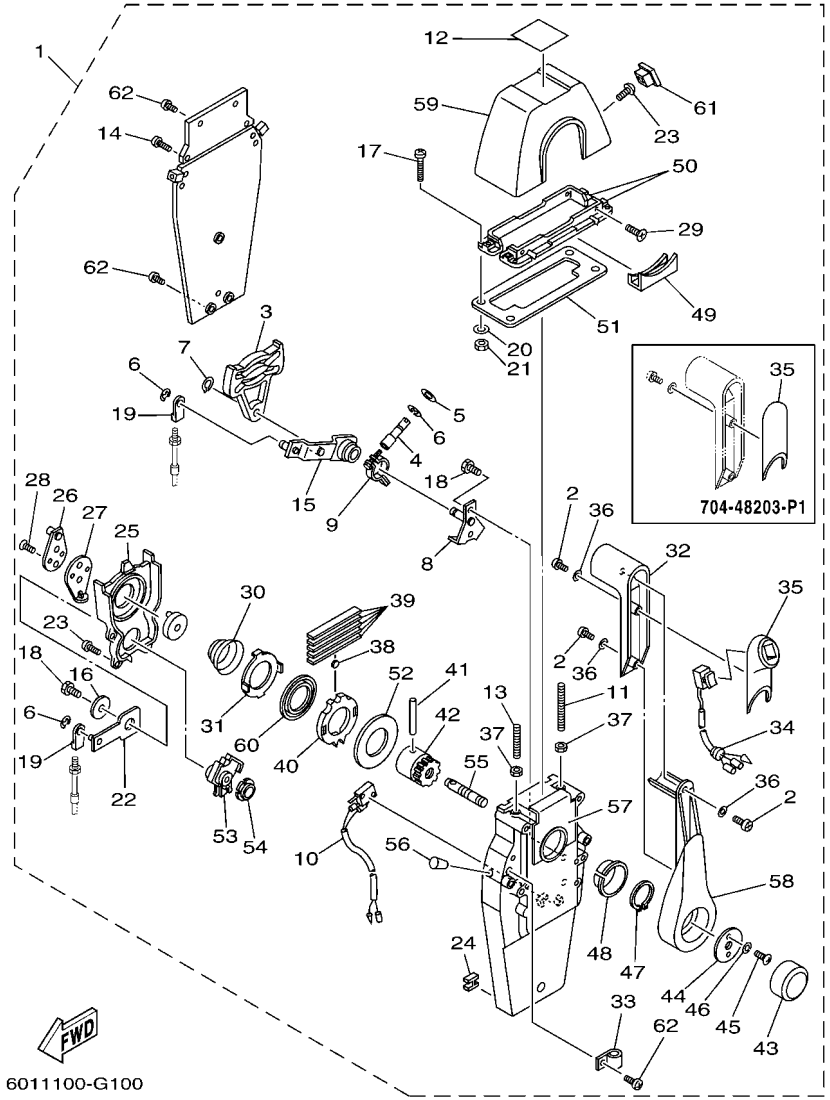

FIG. 7 REMOTE CONTROL ASSY 4

REF. NO.	PART NO.	DESCRIPTION	601R					REMARKS
52	704–48192–P0	.WASHER 2	1					
53	704–48233–00	.GEAR 2	1					
54	704–48235–00	.BUSHING	1					
55	704–48153–00	.SHAFT, FREE ACCEL.	1					
56	704–48166–00	.PLUG	1					
57	704–48284–P0	.GROMMET	1					
58	704–48221–P0	.LEVER, CONTROL	1					
59	704–48119–31	.COVER	1					
60	704–48178–10	.PLATE, SHIFT	1					
61	704–48167–01	.PLUG	1					
62	97890–05016	.SCREW, PAN HEAD	2					WITHOUT PT/T SW.
	97890–05016	.SCREW, PAN HEAD	3					WITH PT/T SW.

704 REMOTE CONTROL (PREMIUM TWIN)

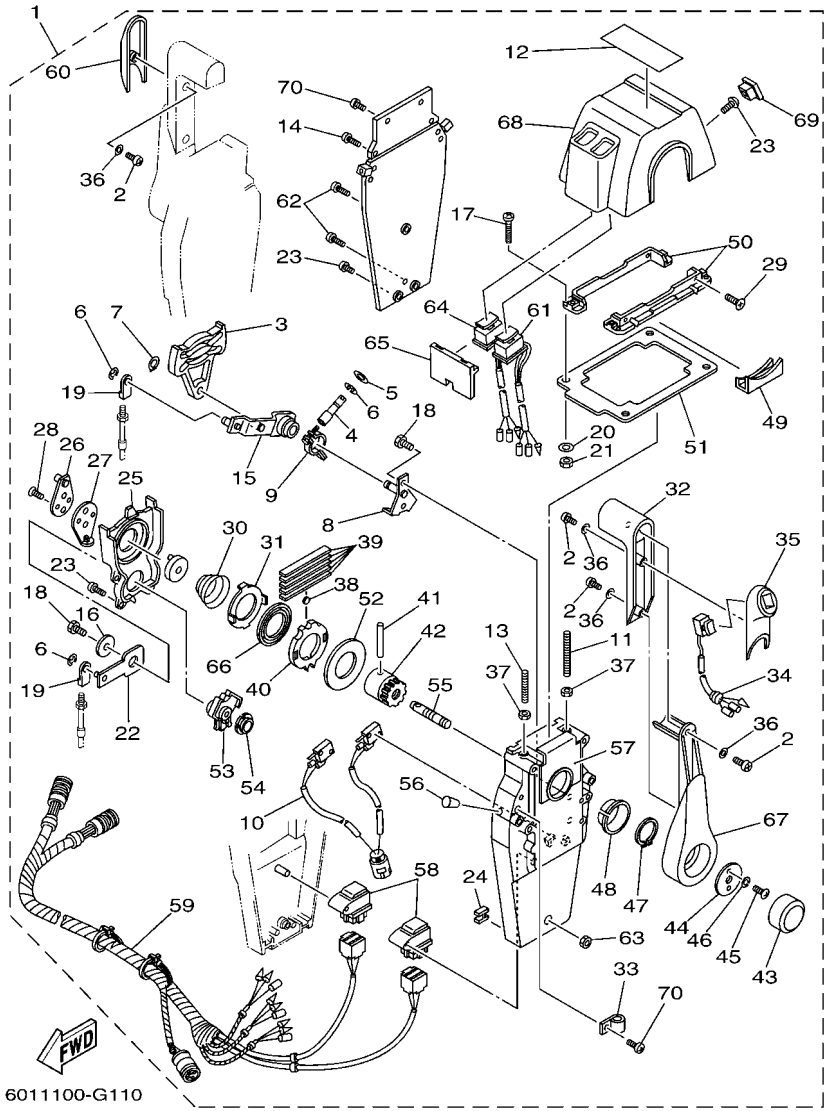

FIG. 8 REMOTE CONTROL ASSY 5

REF. NO.	PART NO.	DESCRIPTION	601R					REMARKS
1	704–48207–P1	REMOTE CONTROL ASSY	1					WITH PT/T SW.
2	704–48129–00	.SCREW 3	6					
3	EL8–48251–00	.PLATE, CAM	2					
4	704–48265–00	.SHAFT, FRICTION	2					
5	701–48246–00	.SPACER	2					
6	93430–06024	.CIRCLIP	8					
7	EL8–48259–00	.CIRCLIP 1	2					
8	704–48262–00	.SHAFT, THROTTLE	2					
9	704–48264–00	.THROTTLE, FRICTION	2					
10	704–82540–30	.NEUTRAL SWITCH ASSY	1					
11	EL8–48281–00	.SCREW	2					
12	704–48215–30	.GRAPHIC	1					
13	704–48281–00	.SCREW	2					
14	97890–05025	.SCREW, PAN HEAD	4					
15	704–48261–00	.ARM, THROTTLE	2					
16	EL8–48191–00	.WASHER 1	2					
17	704–48283–00	.SCREW	4					
18	97380–06018	.BOLT	6					
19	703–48345–01	.CABLE END, REMOTE CONTROL 2	4					
20	704–48287–00	.WASHER	4					
21	95380–05600	.NUT	4					
22	704–48271–00	.ARM, SHIFT	2					
23	EL8–48127–00	.SCREW 1	18					
24	703–48358–00	.ANCHOR, CABLE	2					
25	704–48231–00	.HOUSING, GEAR	2					
26	EL8–48241–00	.ARM, DRIVE	2					
27	EL8–48254–00	.STOPPER, THROTTLE ADJUSTING	2					

704 REMOTE CONTROL (PREMIUM TWIN)

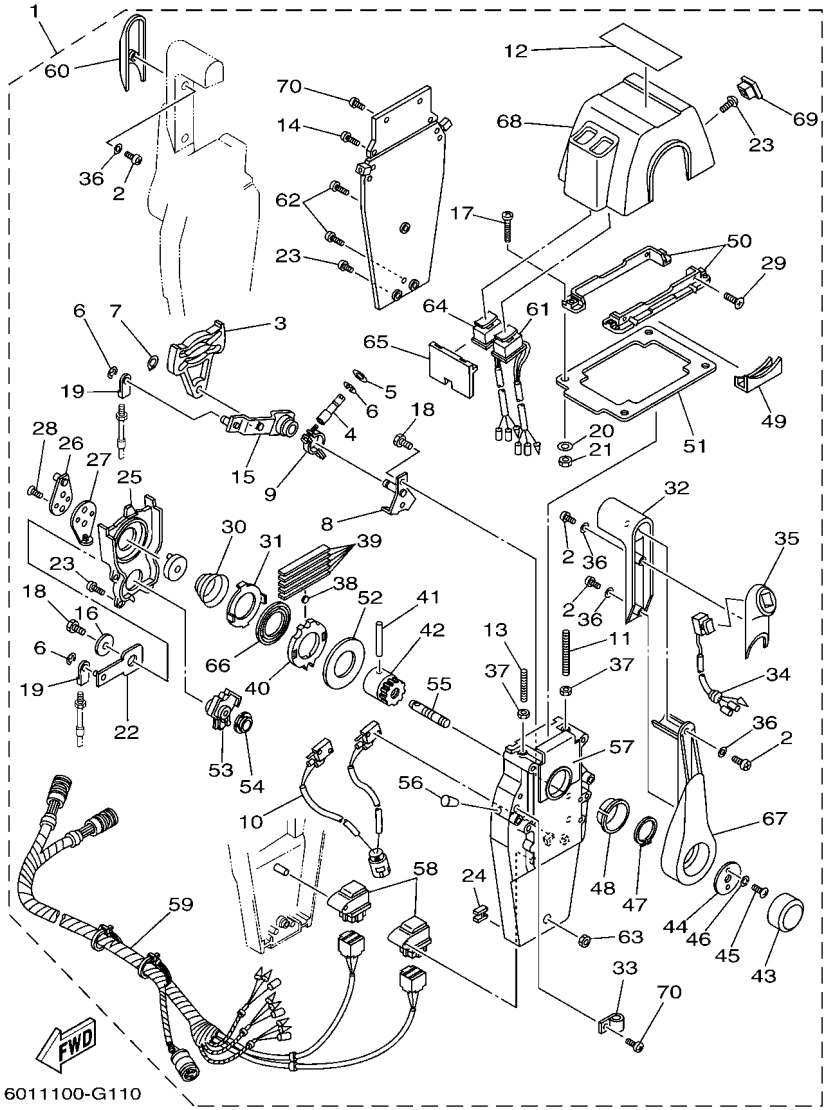

FIG. 8 REMOTE CONTROL ASSY 5

REF. NO.	PART NO.	DESCRIPTION	601R					REMARKS
28	92780–06020	.SCREW, FLAT HEAD	4					
29	98780–05018	.SCREW, FLAT HEAD	4					
30	EL8–48244–00	.SPRING, FREE ACCEL.	2					
31	EL8–48245–00	.PLATE, LOCK	2					
32	704–48222–P0	.GRIP, CONTROL LEVER	2					
33	704–82594–00	.CLAMP	1					
34	704–82563–51	.TRIM & TILT SWITCH ASSY	1					
35	704–48229–P1	.GRIP, CONTROL LEVER	1					
36	92990–05300	.WASHER, INTERNAL TOOTH	6					
37	95380–06600	.NUT, HEXAGON	4					
38	701–48248–00	.ROLLER, FREE ACCEL.	2					
39	704–48238–00	.SPRING, DETENT	10					
40	704–48232–P1	.GEAR	2					
41	EL8–48164–00	.PIN 2	2					
42	704–48242–10	.SHAFT, DRIVE	2					
43	6X3–48225–20	.COVER	2					
44	704–48192–00	.WASHER 2	2					
45	97890–06018	.SCREW, PAN HEAD	4					
46	92990–06300	.WASHER, INTERNAL TOOTH	4					
47	EL8–48279–00	.CIRCLIP 2	2					
48	704–48234–00	.BUSHING 1	2					
49	704–48219–P0	.COVER, LEAD	2					
50	704–48144–20	.PLATE, STOPPER 2	2					
51	704–48176–10	.GROMMET	1					
52	704–48192–P0	.WASHER 2	2					
53	704–48233–00	.GEAR 2	2					
54	704–48235–00	.BUSHING	2					

704 REMOTE CONTROL (PREMIUM TWIN)

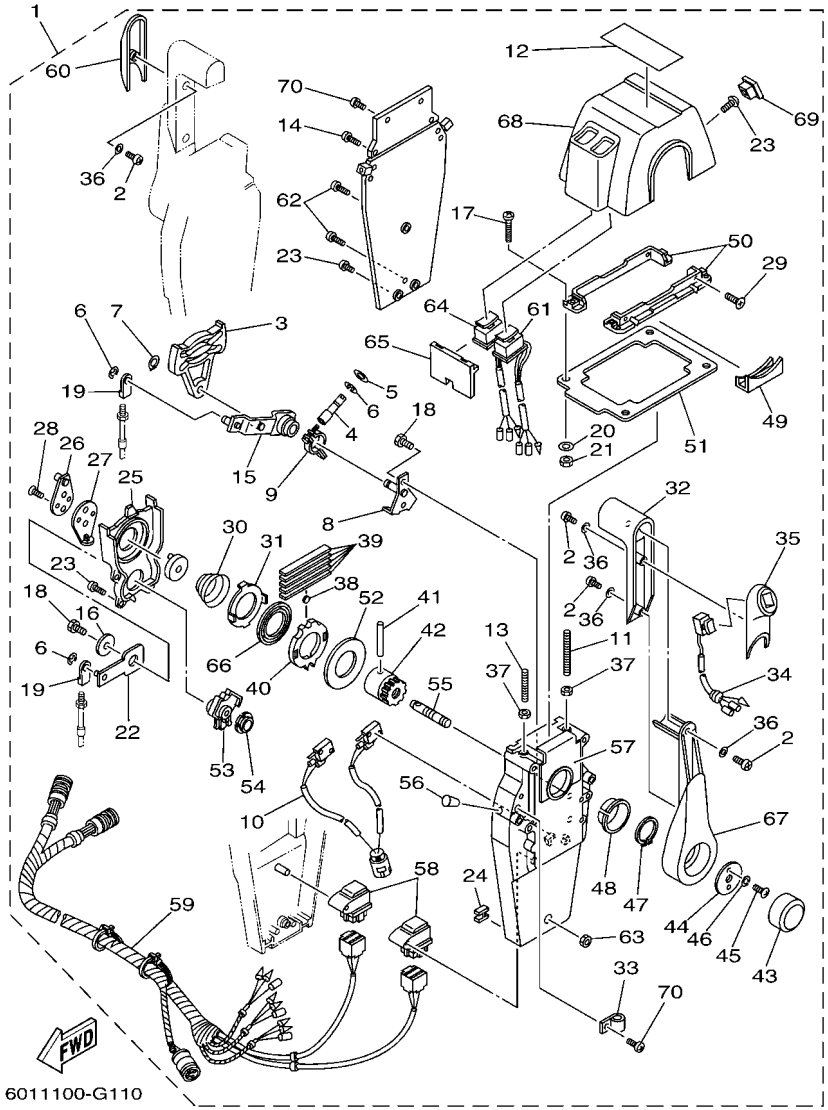

FIG. 8 REMOTE CONTROL ASSY 5

REF. NO.	PART NO.	DESCRIPTION	601R					REMARKS
55	704–48153–00	.SHAFT, FREE ACCEL.	2					
56	704–48166–00	.PLUG	2					
57	704–48284–P0	.GROMMET	2					
58	704–81950–10	.RELAY ASSY	2					
59	704–82590–10	.WIRE HARNESS ASSY	1					
60	704–48229–R0	.GRIP, CONTROL LEVER	1					
61	704–82563–H1	.TRIM & TILT SWITCH ASSY	1					
62	704–48128–00	.SCREW 2	3					
63	704–48156–00	.NUT 1	1					
64	704–82563–J1	.TRIM & TILT SWITCH ASSY	1					
65	704–48285–10	.GROMMET 2	1					
66	704–48178–00	.PLATE, SHIFT	2					
67	704–48221–P0	.LEVER, CONTROL	2					
68	704–48119–41	.COVER	1					
69	704–48167–11	.PLUG	1					
70	97890–05016	.SCREW, PAN HEAD	5					

6X3 REMOTE CONTROL

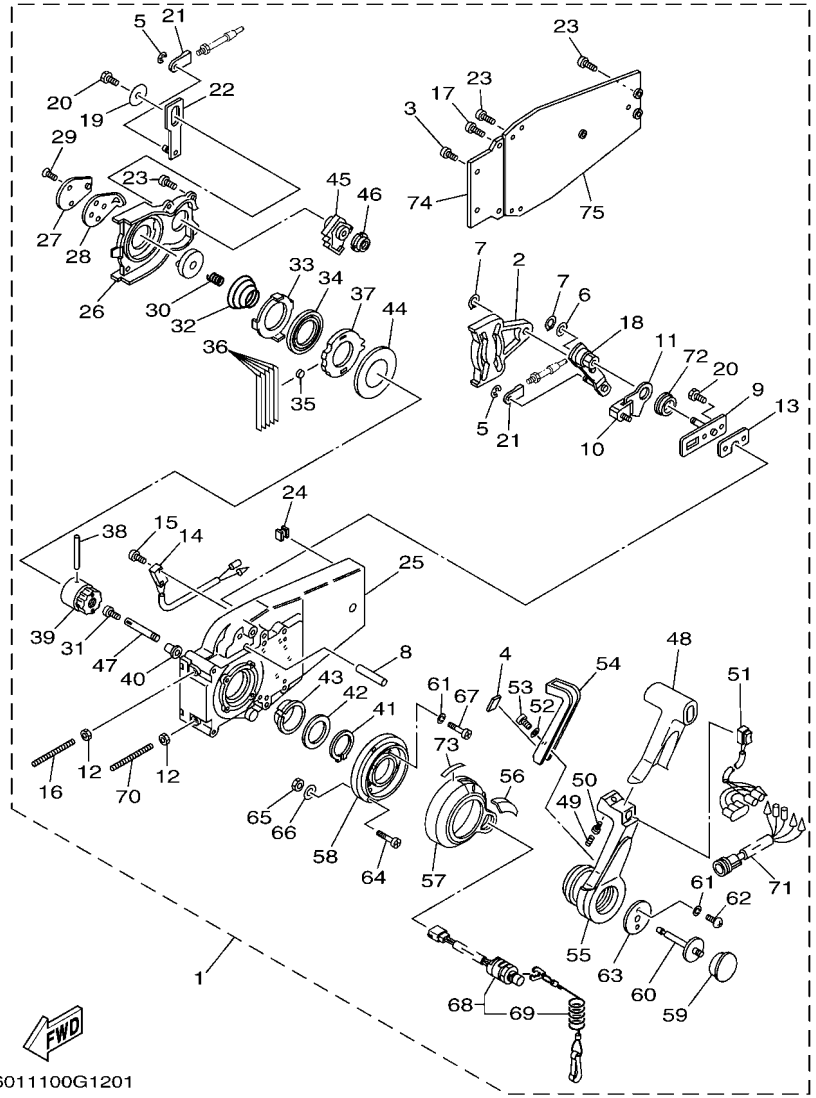

6011100G1201

FIG. 9 REMOTE CONTROL ASSY 6

REF. NO.	PART NO.	DESCRIPTION	601R					REMARKS
1	6X3–48206–02	REMOTE CONTROL ASSY	1					WITH PT/T SW.
2	EL8–48251–00	.PLATE, CAM	1					
3	97890–05016	.SCREW, PAN HEAD	2					
4	6X0–48138–00	.CAP, LOCK ARM	1					
5	93430–06024	.CIRCLIP	3					
6	92990–10600	.WASHER, PLATE	1					
7	EL8–48259–00	.CIRCLIP 1	2					
8	6X0–48265–00	.SHAFT, FRICTION	1					
9	6X0–48262–00	.SHAFT, THROTTLE	1					
10	6X0–48264–00	.THROTTLE, FRICTION	1					
11	6X0–48187–00	.PLATE, ADJUST	1					
12	95380–06600	.NUT, HEXAGON	2					
13	704–48266–00	.SPACER	1					
14	704–82540–00	.NEUTRAL SWITCH ASSY	1					
15	703–48129–00	.SCREW 3	2					
16	EL8–48281–00	.SCREW	1					
17	97890–05025	.SCREW, PAN HEAD	2					
18	6X0–48261–00	.ARM, THROTTLE	1					
19	EL8–48191–00	.WASHER 1	1					
20	97380–06018	.BOLT	3					
21	703–48345–01	.CABLE END, REMOTE CONTROL 2	2					
22	EL8–48271–00	.ARM, SHIFT	1					
23	EL8–48127–00	.SCREW 1	11					
24	703–48358–00	.ANCHOR, CABLE	1					
25	6X0–48211–00	.HOUSING,1	1					
26	EL8–48231–00	.HOUSING, GEAR	1					
27	EL8–48241–00	.ARM, DRIVE	1					

6X3 REMOTE CONTROL

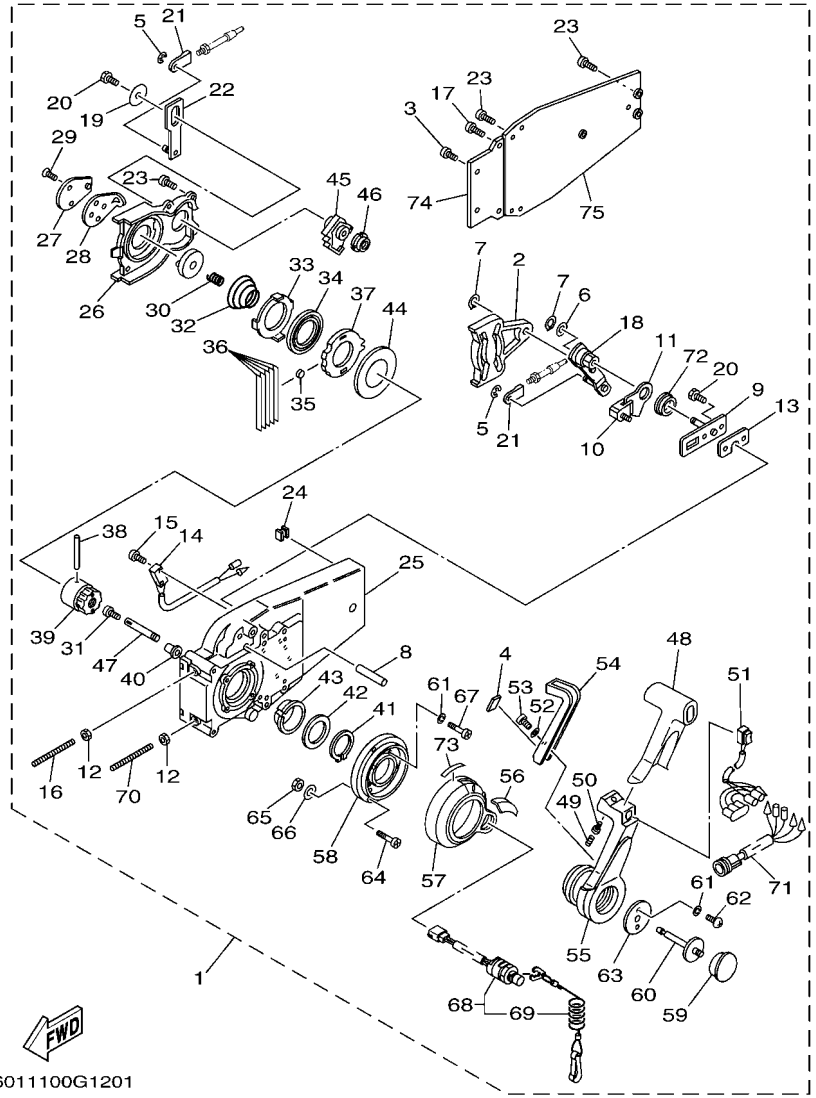

6011100G1201

FIG. 9 REMOTE CONTROL ASSY 6

REF. NO.	PART NO.	DESCRIPTION	601R					REMARKS
28	EL8–48254–00	.STOPPER, THROTTLE ADJUSTING	1					
29	92780–06020	.SCREW, FLAT HEAD	2					
30	EL8–48158–00	.SPRING 1	1					
31	98580–04006	.SCREW, PAN HEAD	1					
32	EL8–48244–00	.SPRING, FREE ACCEL.	1					
33	EL8–48245–00	.PLATE, LOCK	1					
34	704–48178–00	.PLATE, SHIFT	1					
35	701–48248–00	.ROLLER, FREE ACCEL.	1					
36	704–48238–00	.SPRING, DETENT	5					
37	6X0–48121–00	.GEAR 1	1					
38	EL8–48164–00	.PIN 2	1					
39	EL8–48242–10	.SHAFT, DRIVE	1					
40	702–48263–00	.BUSHING	1					
41	EL8–48279–00	.CIRCLIP 2	1					
42	704–48193–00	.WASHER 3	1					
43	EL8–48234–00	.BUSHING 1	1					
44	703–48192–00	.WASHER 2	1					
45	EL8–48233–00	.GEAR 2	1					
46	702–48235–00	.BUSHING	1					
47	6X0–48153–00	.SHAFT, FREE ACCEL.	1					
48	6X3–48222–01	.GRIP, CONTROL LEVER	1					
49	703–48227–00	.SPRING, NEUTRAL LOCK	1					
50	98580–05008	.SCREW, PAN HEAD	1					
51	6X3–82563–01	.TRIM & TILT SWITCH ASSY	1					
52	6X0–48288–00	.WASHER, PLAIN	1					
53	6X0–48127–00	.SCREW 1	1					
54	6X0–48223–00	.LOCK, NEUTRAL	1					

6X3 REMOTE CONTROL

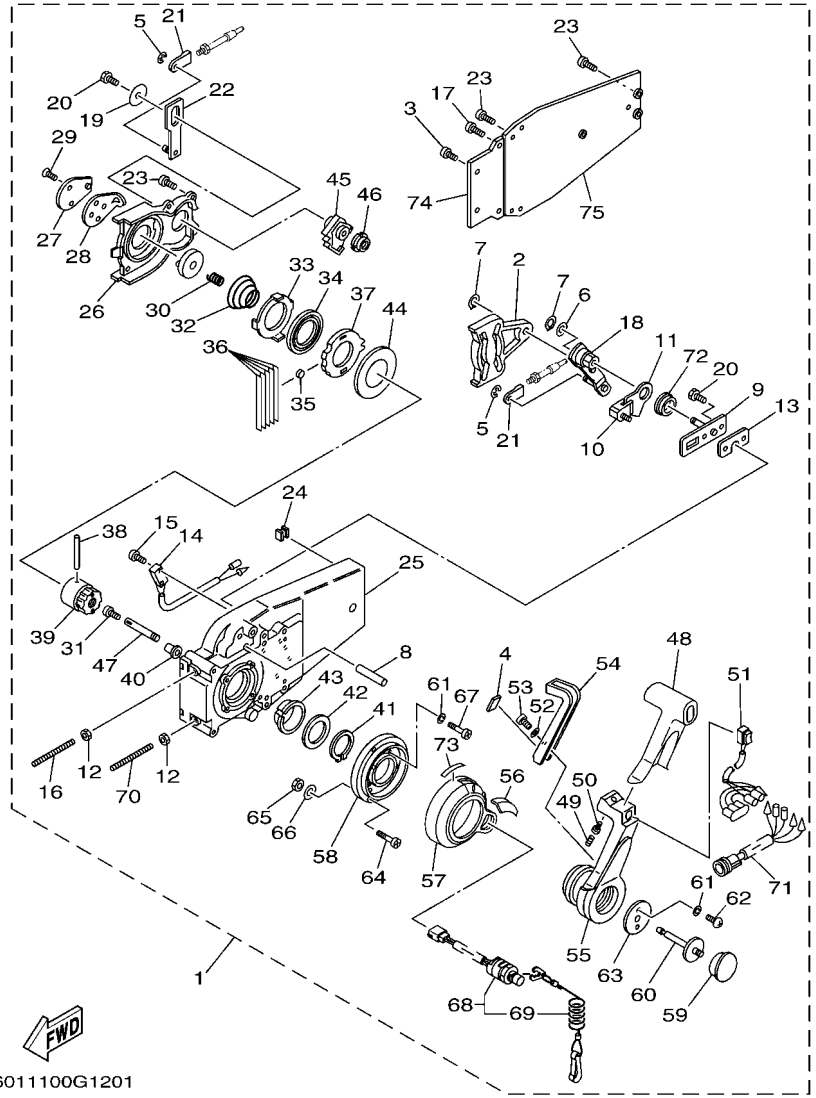

6011100G1201

FIG. 9 REMOTE CONTROL ASSY 6

REF. NO.	PART NO.	DESCRIPTION	601R					REMARKS
55	6X3–48221–00	.LEVER, CONTROL	1					
56	6X3–48225–10	.COVER	1					
57	6X3–48225–00	.COVER	1					
58	6X3–48111–00	.BODY, REMOTE CONTROL 1	1					
59	6X3–48225–20	.COVER	1					
60	6X0–48155–00	.PLUNGER	1					
61	92990–05300	.WASHER, INTERNAL TOOTH	6					
62	6X0–48281–00	.SCREW	2					
63	6X0–48193–00	.WASHER 3	1					
64	97890–06035	.SCREW, PAN HEAD	3					UR
	6X0–48128–00	.SCREW(M6X30)	3					UR
65	6X0–48156–00	.NUT 1	3					
66	701–48287–00	.WASHER	3					
67	6X3–48129–00	.SCREW 3	4					
68	6X3–82575–01	.ENGINE STOP SWITCH ASSY	1					
69	682–82556–00	..LANYARD, STOP SWITCH	1					
70	704–48281–00	.SCREW	1					
71	704–82541–10	.WIRE, LEAD	1					
72	6X0–48116–00	.BUSHING	1					
73	6X3–44191–00	.INDICATOR, SHIFT	1					
74	EL8–48212–00	.BACK PLATE 1	1					
75	EL8–48213–00	.BACK PLATE 2	1					

6X5 REMOTE CONTROL (TRIPLE)

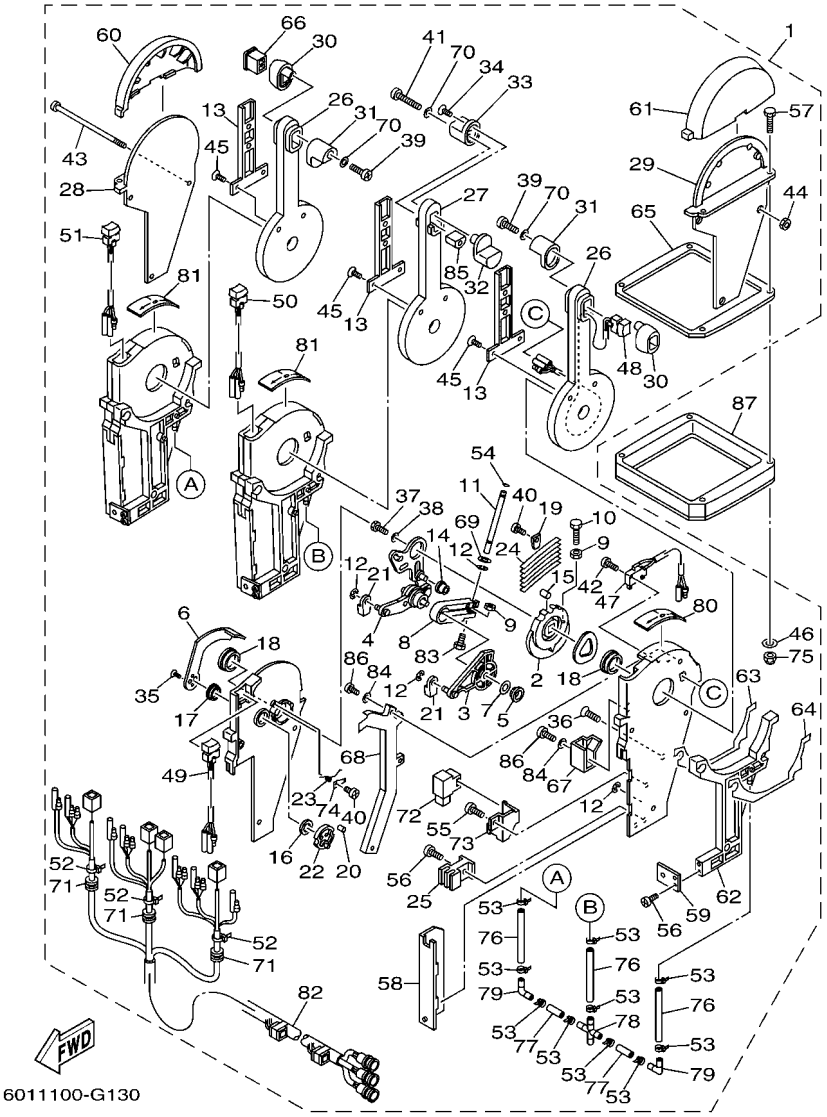

FIG. 10 REMOTE CONTROL ASSY 7

REF. NO.	PART NO.	DESCRIPTION	601R					REMARKS
1	6X5–48207–02	REMOTE CONTROL ASSY	1					WITH PT/T SW.
2	6X5–48232–00	.GEAR	3					
3	6X5–48271–00	.ARM, SHIFT	3					
4	6X5–48261–00	.ARM, THROTTLE	3					
5	703–48235–00	.BUSHING	3					
6	6X5–48152–00	.KNOB, FREE ACCEL.	3					
7	703–48268–00	.SPACER	3					
8	6X5–48264–00	.FRICTION, THROTTLE	3					
9	95380–05600	.NUT	6					
10	97380–05025	.BOLT	3					
11	6X5–48265–00	.SHAFT, FRICTION	3					
12	93430–06024	.CIRCLIP	12					
13	6X5–48224–00	.COVER, CONTROL LEVER	3					
14	703–48252–00	.ROLLER, CAM	3					
15	701–48248–00	.ROLLER, FREE ACCEL.	3					
16	703–48198–00	.WASHER, WAVE	3					
17	703–48243–00	.BUSHING	3					
18	703–48236–00	.BUSHING 1	6					
19	703–48189–00	.RETAINER	3					
20	703–48234–00	.ROLLER, DETENT	3					
21	703–48345–01	.CABLE END, REMOTE CONTROL 2	6					
22	703–48153–00	.SHAFT, FREE ACCEL.	3					
23	703–48244–00	.SPRING, FREE ACCEL.	3					
24	703–48238–00	.SPRING, DETENT	18					
25	6X5–48358–00	.ANCHOR, CABLE	3					
26	6X5–48221–00	.LEVER, CONTROL	2					
27	6X5–48221–10	.LEVER, CONTROL	1					

6X5 REMOTE CONTROL (TRIPLE)

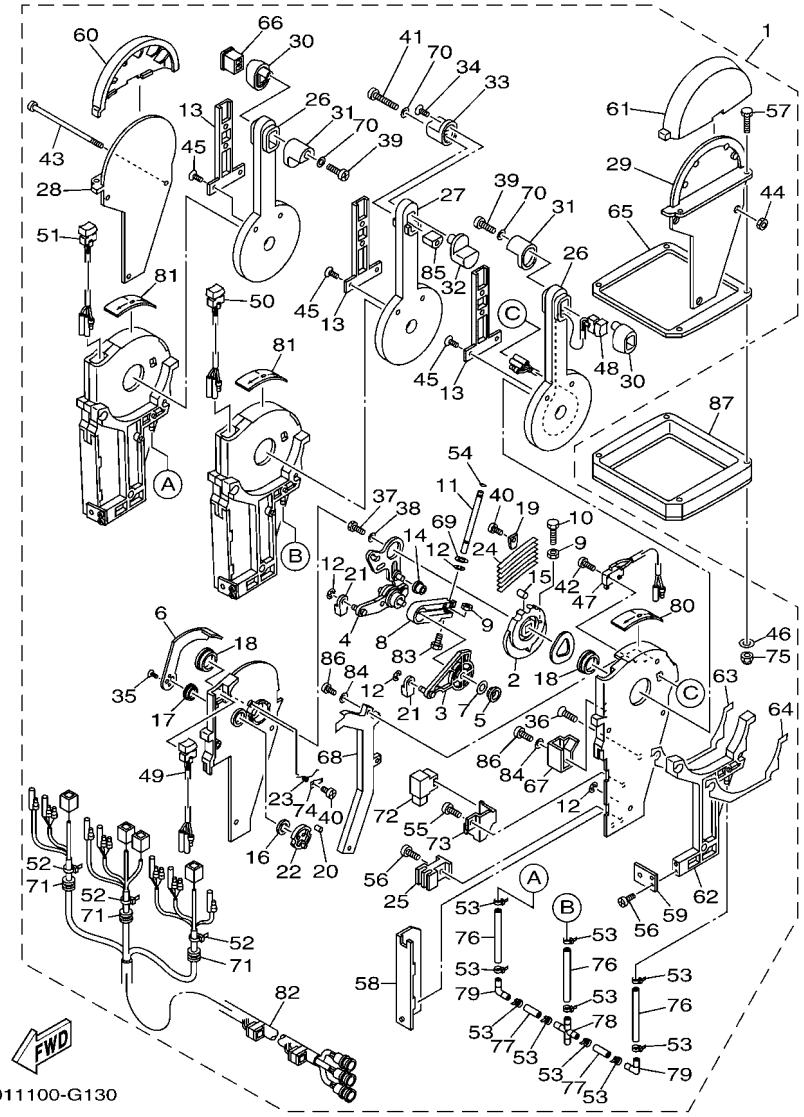

FIG. 10 REMOTE CONTROL ASSY 7

REF. NO.	PART NO.	DESCRIPTION	601R					REMARKS
28	6X5–48144–10	.PLATE, STOPPER 2	1					
29	6X5–48144–00	.PLATE, STOPPER 2	1					
30	6X5–48229–01	.GRIP, CONTROL LEVER	2					
31	6X5–48222–01	.GRIP, CONTROL LEVER	2					
32	6X5–48229–11	.GRIP, CONTROL LEVER	1					
33	6X5–48222–11	.GRIP, CONTROL LEVER	1					
34	6X5–48127–00	.SCREW 1	1					
35	703–48128–00	.SCREW 2	6					
36	6X5–48129–00	.SCREW 3	9					
37	97380–08030	.BOLT	3					
38	92990–08200	.WASHER, PLAIN	3					
39	6X5–48127–10	.SCREW 1	2					
40	98580–04006	.SCREW, PAN HEAD	6					
41	6X5–48127–20	.SCREW 1	1					
42	703–48129–00	.SCREW 3	6					
43	6X5–48267–00	.BOLT SET	3					
44	6X0–48156–00	.NUT 1	3					
45	98780–04010	.SCREW, FLAT HEAD	6					
46	704–48287–00	.WASHER	4					
47	6X5–82540–00	.NEUTRAL SWITCH ASSY	3					
48	6X5–82563–01	.TRIM & TILT SWITCH ASSY	1					
49	6X5–82563–11	.TRIM & TILT SWITCH ASSY	1					
50	6X5–82563–21	.TRIM & TILT SWITCH ASSY	1					
51	6X5–82563–31	.TRIM & TILT SWITCH ASSY	1					
52	703–82591–00	.BAND	3					
53	6X4–42821–00	.BAND, CLAMP	14					
54	6X5–48351–00	.SEAL, RUBBER	3					

6X5 REMOTE CONTROL (TRIPLE)

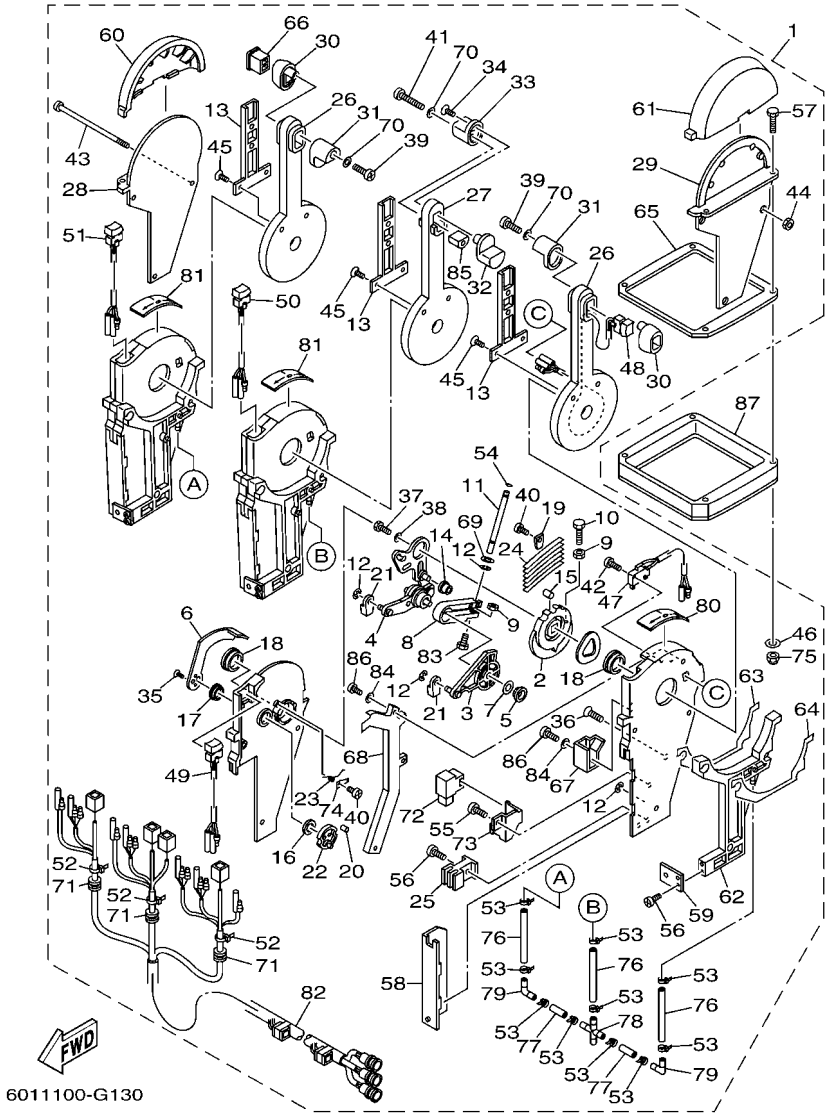

FIG. 10 REMOTE CONTROL ASSY 7

REF. NO.	PART NO.	DESCRIPTION	601R					REMARKS
55	98580–05010	.SCREW, PAN HEAD	3					
56	98580–05012	.SCREW, PAN HEAD	12					
57	98580–05040	.SCREW, PAN HEAD	4					UR
	97780–05130	.SCREW, TAPPING	4					UR
58	6X5–48213–00	.BACK PLATE 2	3					
59	6X5–48354–00	.SET-PLATE, CABLE	3					
60	6X5–48119–11	.COVER	1					
61	6X5–48119–01	.COVER	1					
62	6X5–48246–00	.SPACER	3					
63	6X5–48214–00	.PAD	3					
64	6X5–48214–10	.PAD	3					
65	6X5–48176–00	.GROMMET	1					
66	6X5–48222–21	.GRIP, CONTROL LEVER	1					
67	6X5–48219–00	.COVER, LEAD	3					
68	6X5–48225–00	.COVER	3					
69	92990–08600	.WASHER, PLATE	3					
70	92990–05300	.WASHER, INTERNAL TOOTH	3					
71	6X5–48175–00	.BOOT	3					
72	704–81950–10	.RELAY ASSY	4					
73	6X5–48228–00	.HOLDER, SWITCH	3					
74	703–48246–00	.SPACER	3					
75	95380–06600	.NUT, HEXAGON	4					
76	6X5–48317–00	.TUBE	3					
77	6X5–48317–10	.TUBE	2					
78	6X5–48338–00	.CONNECTOR	1					
79	6X5–48338–10	.CONNECTOR	2					
80	6X5–48215–00	.GRAPHIC	1					

6X5 REMOTE CONTROL (TRIPLE)

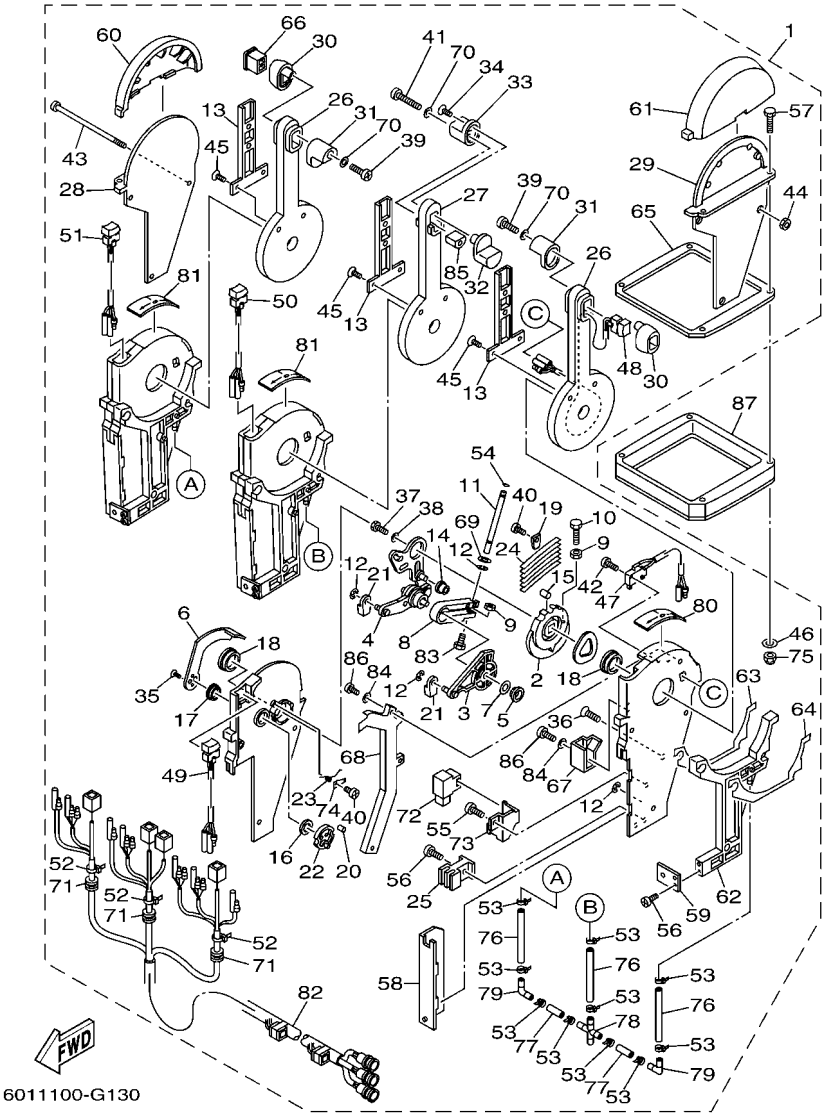

FIG. 10 REMOTE CONTROL ASSY 7

REF. NO.	PART NO.	DESCRIPTION	601R					REMARKS
81	6X5–48215–10	.GRAPHIC	2					
82	6X5–82590–00	.WIRE HARNESS ASSY	1					
83	6X5–48267–00	.BOLT SET	3					
84	92990–05200	.WASHER, PLAIN	15					
85	6X5–48222–30	.GRIP, CONTROL LEVER	1					
86	98580–05012	.SCREW, PAN HEAD	15					
87	6X5–48293–00	SPACER, REMOTE CONTROL	1					LM

FIG. 11 REMOTE CONTROL CABLES

REMOTE CONTROL CABLE

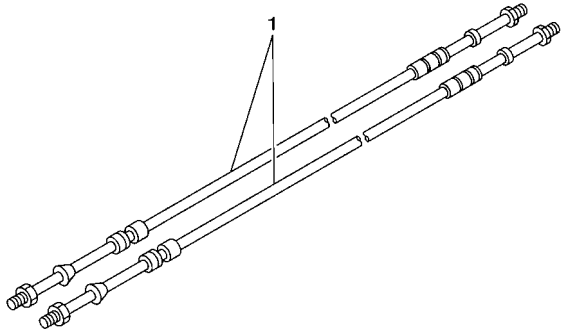

6011100-G140

REF. NO.	PART NO.	DESCRIPTION	601R					REMARKS
1	701–48310–10	CABLE, REMOTE CONTROL L=6F	2					UR
	701–48310–20	CABLE, REMOTE CONTROL L=7F	2					UR
	701–48310–40	CABLE, REMOTE CONTROL L=8F	2					UR
	701–48310–60	CABLE, REMOTE CONTROL L=9F	2					UR
	701–48310–80	CABLE, REMOTE CONTROL L=10F	2					UR
	701–48310–90	CABLE, REMOTE CONTROL L=11F	2					UR
	701–48320–00	CABLE, REMOTE CONTROL L=12F	2					UR
	701–48320–20	CABLE, REMOTE CONTROL L=13F	2					UR
	701–48320–30	CABLE, REMOTE CONTROL L=14F	2					UR
	701–48320–50	CABLE, REMOTE CONTROL L=15F	2					UR
	701–48320–60	CABLE, REMOTE CONTROL L=16F	2					UR
	701–48320–80	CABLE, REMOTE CONTROL L=17F	2					UR
	701–48320–90	CABLE, REMOTE CONTROL L=18F	2					UR
	701–48320–40	CABLE, REMOTE CONTROL L=19F	2					UR
	701–48320–70	CABLE, REMOTE CONTROL L=20F	2					UR
	701–48350–00	CABLE, REMOTE CONTROL L=21F	2					UR
	701–48350–10	CABLE, REMOTE CONTROL L=22F	2					UR
	701–48350–20	CABLE, REMOTE CONTROL L=23F	2					UR
	701–48350–30	CABLE, REMOTE CONTROL L=24F	2					UR
	701–48350–40	CABLE, REMOTE CONTROL L=25F	2					UR
	701–48350–50	CABLE, REMOTE CONTROL L=26F	2					UR
	701–48350–60	CABLE, REMOTE CONTROL L=27F	2					UR
	701–48350–70	CABLE, REMOTE CONTROL L=31F	2					UR

REMOTE CONTROL SPECIFICATION LIST (6X6 TYPE)

TYPE : 6X6	MECHANICAL SPECIFICATION								
TYPE : 6X6	LIST UP SEC.	TYPE CODE	ENGINE				SINGLE STATION	DUAL STATION	
PART NO.	FIG.NO.-REF.NO.		SINGLE	TWIN	TRIPLE	QUAD		MAIN	SUB
6X6-48205-37	12-1	A	○	*	*	*	○	*	*
6X6-48205-47		C	○	*	*	*	*	○	*
6X6-48205-56		G	○	*	*	*	*	*	○
6X6-48207-37	13-1	B	*	○	*	*	○	*	*
6X6-48207-47		D	*	○	*	*	*	○	*
6X6-48207-56		H	*	○	*	*	*	*	○
6X6-48208-47	14-1	F	*	*	○	*	*	○	*
6X6-48208-56		K	*	*	○	*	*	*	○
6X6-48209-07	15-1	L	*	*	*	○	*	○	*
6X6-48209-16		M	*	*	*	○	*	*	○

6X6 REMOTE CONTROL (SINGLE)

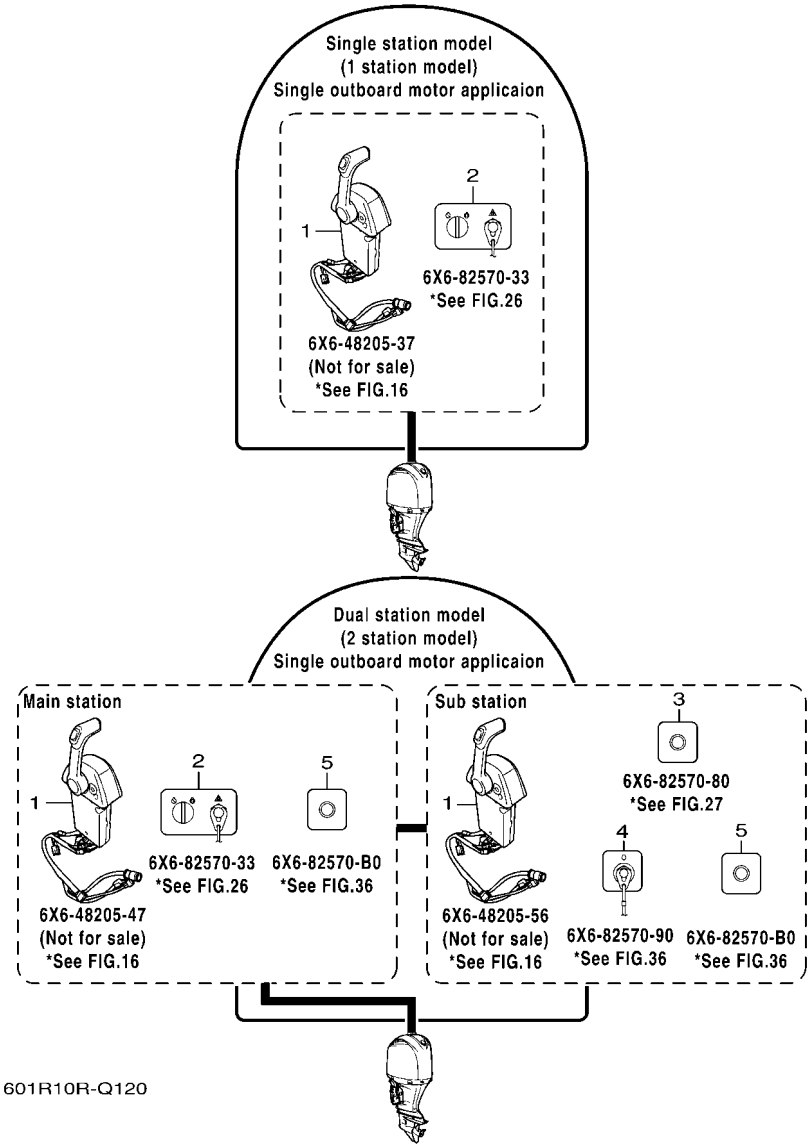

FIG. 12 LAYOUT CHART 1 (SINGLE)

REF. NO.	PART NO.	DESCRIPTION	601R					REMARKS
1	6X6–48205–37	REMOTE CONTROL ASSY (SINGLE)	1					NOT FOR SALE
	6X6–48205–47	REMOTE CONTROL ASSY (SINGLE)	1					NOT FOR SALE
	6X6–48205–56	REMOTE CONTROL ASSY (SINGLE)	1					NOT FOR SALE
2	6X6–82570–33	PANEL SWITCH ASSY	1					1 & 2 STATION MAIN
3	6X6–82570–80	PANEL SWITCH ASSY	1					2 STATION SUB
4	6X6–82570–90	PANEL SWITCH ASSY	1					2 STATION SUB
5	6X6–82570–B0	PANEL SWITCH ASSY	2					2 STATION MAIN & SUB

6X6 REMOTE CONTROL (TWIN)

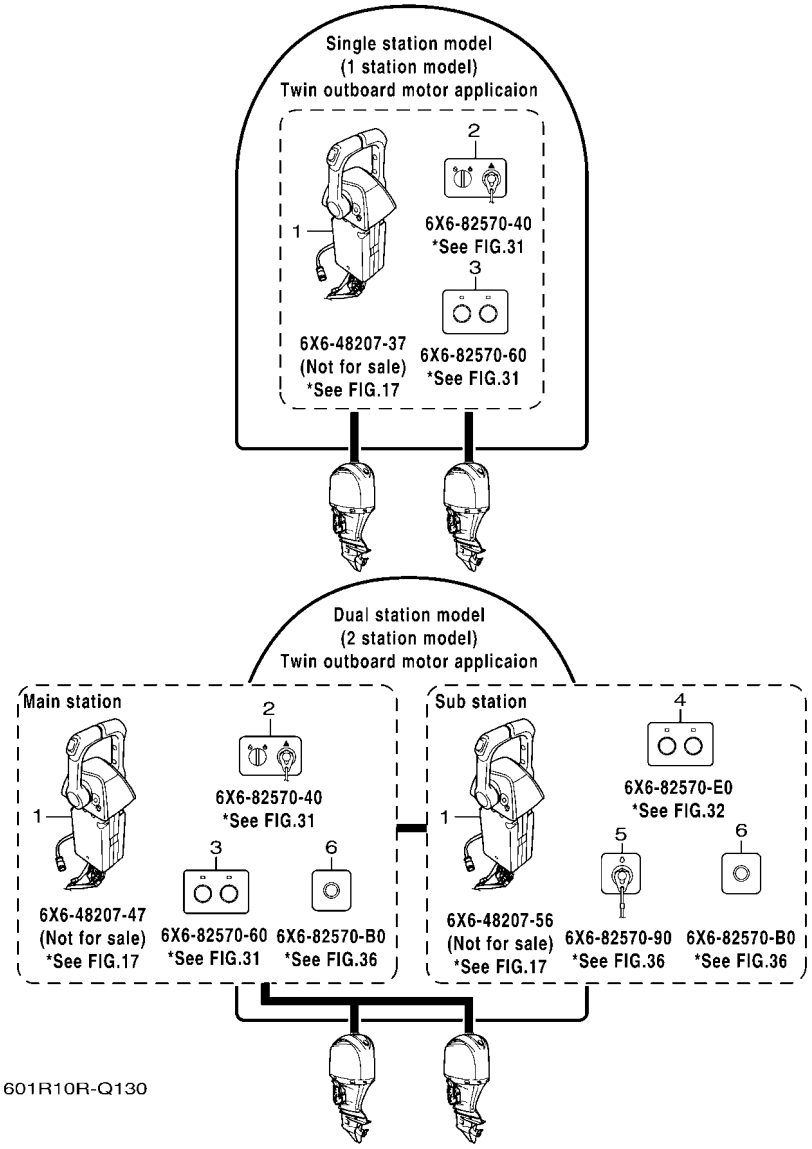

FIG. 13 LAYOUT CHART 2 (TWIN)

REF. NO.	PART NO.	DESCRIPTION	601R					REMARKS
1	6X6–48207–37	REMOTE CONTROL ASSY (TWIN)	1					NOT FOR SALE
	6X6–48207–47	REMOTE CONTROL ASSY (TWIN)	1					NOT FOR SALE
	6X6–48207–56	REMOTE CONTROL ASSY (TWIN)	1					NOT FOR SALE
2	6X6–82570–40	PANEL SWITCH ASSY	1					1 & 2 STATION MAIN
3	6X6–82570–60	PANEL SWITCH ASSY	1					1 & 2 STATION MAIN
4	6X6–82570–E0	PANEL SWITCH ASSY	1					2 STATION SUB
5	6X6–82570–90	PANEL SWITCH ASSY	1					2 STATION SUB
6	6X6–82570–B0	PANEL SWITCH ASSY	2					2 STATION MAIN & SUB

6X6 REMOTE CONTROL (TRIPLE)

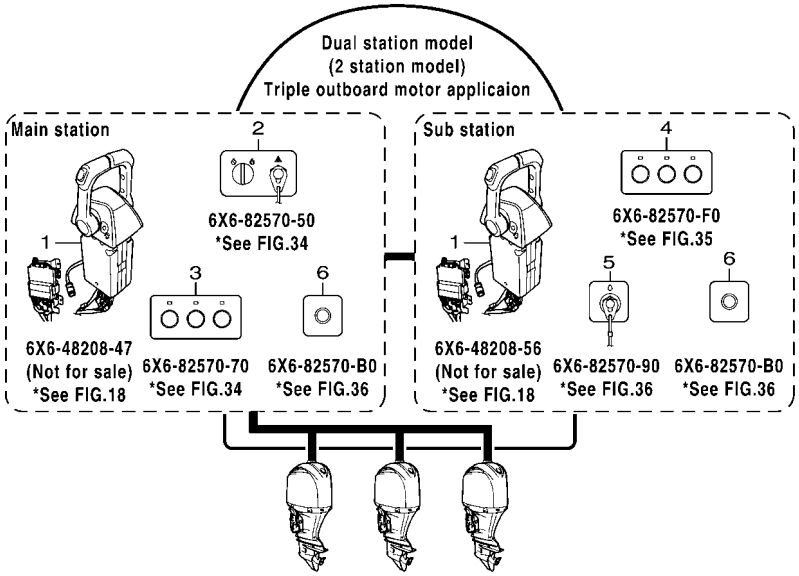

601R10R-Q140

FIG. 14 LAYOUT CHART 3 (TRIPLE)

REF. NO.	PART NO.	DESCRIPTION	601R					REMARKS
1	6X6–48208–47	REMOTE CONTROL ASSY (TRIPLE)	1					NOT FOR SALE
	6X6–48208–56	REMOTE CONTROL ASSY (TRIPLE)	1					NOT FOR SALE
2	6X6–82570–50	PANEL SWITCH ASSY	1					1 & 2 STATION MAIN
3	6X6–82570–70	PANEL SWITCH ASSY	1					1 & 2 STATION MAIN
4	6X6–82570–F0	PANEL SWITCH ASSY	1					2 STATION SUB
5	6X6–82570–90	PANEL SWITCH ASSY	1					2 STATION SUB
6	6X6–82570–B0	PANEL SWITCH ASSY	2					2 STATION MAIN & SUB

6X6 REMOTE CONTROL (QUAD)

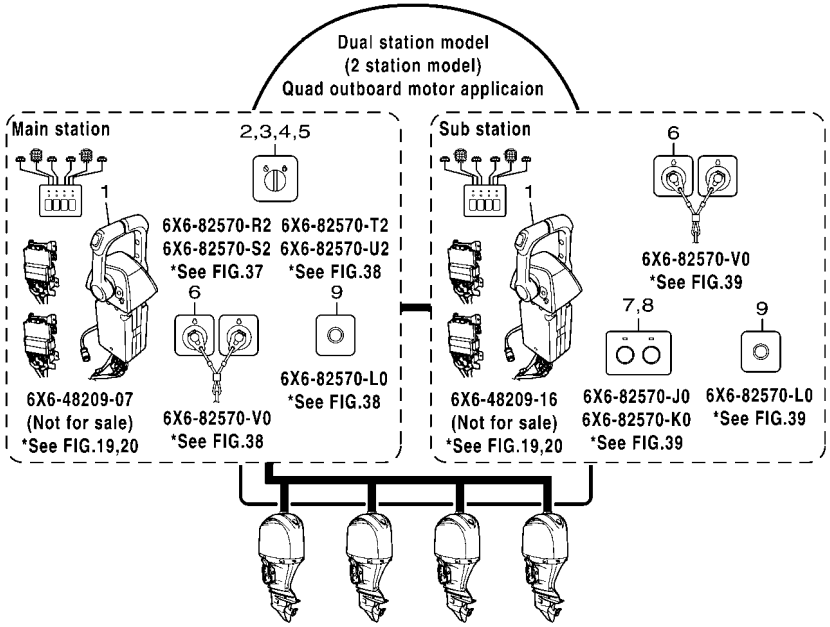

601R10R-Q150

FIG. 15 LAYOUT CHART 4 (QUAD)

REF. NO.	PART NO.	DESCRIPTION	601R					REMARKS
1	6X6–48209–07	REMOTE CONTROL ASSY (QUAD)	1					NOT FOR SALE
	6X6–48209–16	REMOTE CONTROL ASSY (QUAD)	1					NOT FOR SALE
2	6X6–82570–R2	PANEL SWITCH ASSY (FOR PORT)	1					1 & 2 STATION MAIN
3	6X6–82570–S2	PANEL SWITCH ASSY (FOR C-PORT)	1					1 & 2 STATION MAIN
4	6X6–82570–T2	PANEL SWITCH ASSY (FOR C-STBD)	1					1 & 2 STATION MAIN
5	6X6–82570–U2	PANEL SWITCH ASSY (FOR STBD)	1					1 & 2 STATION MAIN
6	6X6–82570–V0	PANEL SWITCH ASSY	2					2 STATION MAIN & SUB
7	6X6–82570–J0	PANEL SWITCH ASSY (PORT-P/CP)	1					2 STATION SUB
8	6X6–82570–K0	PANEL SWITCH ASSY (STBD-CS/S)	1					2 STATION SUB
9	6X6–82570–L0	PANEL SWITCH ASSY	2					2 STATION MAIN & SUB

6X6 REMOTE CONTROL (SINGLE)

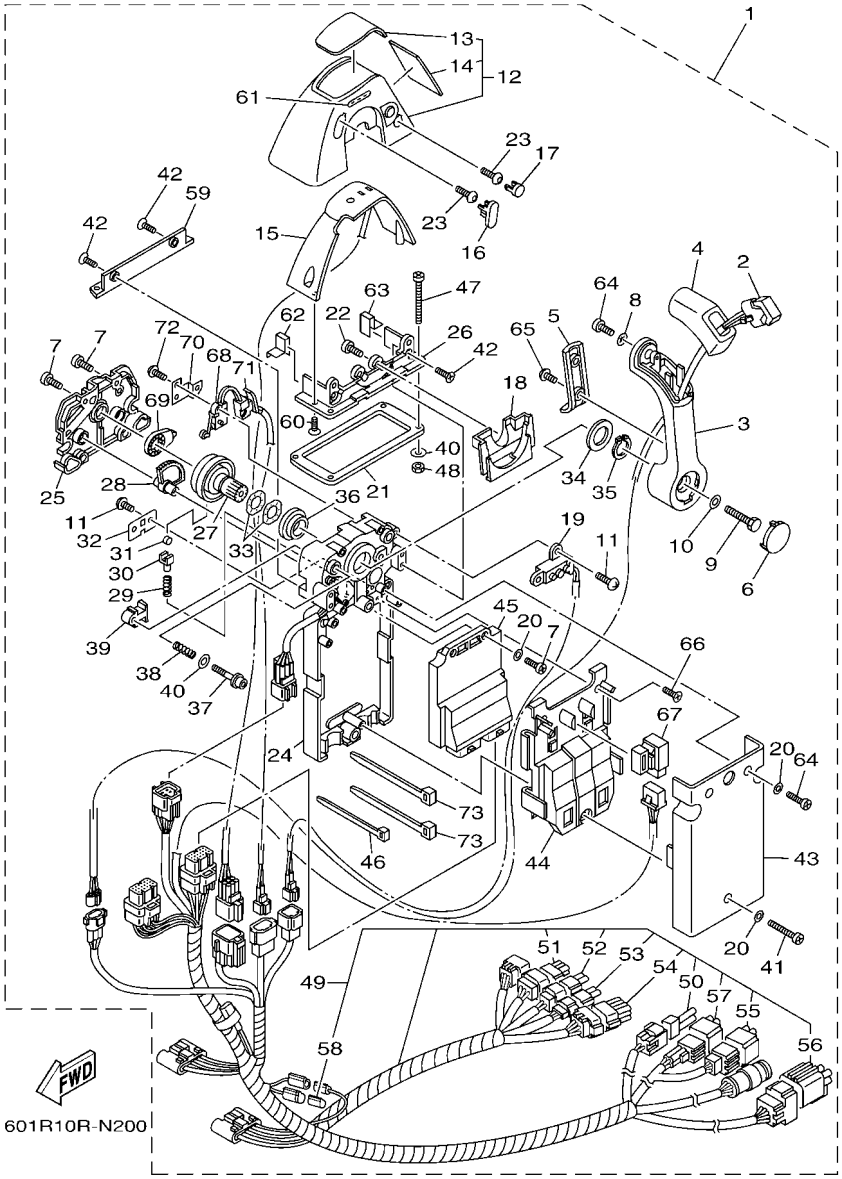

FIG. 16 DBW REMOTE CONTROL 1 (SINGLE)

REF. NO.	PART NO.	DESCRIPTION	601R					REMARKS
1	6X6–48205–37	REMOTE CONTROL ASSY (SINGLE)	1					NOT FOR SALE
	6X6–48205–47	REMOTE CONTROL ASSY (SINGLE)	1					NOT FOR SALE
	6X6–48205–56	REMOTE CONTROL ASSY (SINGLE)	1					NOT FOR SALE
2	6X6–82563–01	.TRIM & TILT SWITCH ASSY	1					
3	6X6–48221–00	.LEVER, CONTROL	1					
4	6X6–48222–00	.GRIP, CONTROL LEVER	1					
5	6X6–48224–00	.COVER, CONTROL LEVER	1					
6	6X6–48224–10	.COVER, CONTROL LEVER	1					
7	98580–05014	.SCREW, PAN HEAD	6					
8	92990–05300	.WASHER, INTERNAL TOOTH	1					
9	6X6–48171–00	.BOLT	1					
10	92990–08600	.WASHER, PLATE	1					
11	EL8–48127–00	.SCREW 1	4					
12	6X6–48119–04	.COVER	1					
13	6X6–48215–30	..GRAPHIC	1					
14	6X6–48216–00	..GRAPHIC	1					
15	6X6–84301–00	.PILOT LIGHT ASSY 1	1					
16	6X6–48167–00	.PLUG	1					
17	6X6–48167–50	.PLUG	1					
18	6X6–48219–00	.COVER, LEAD	1					
19	6X6–8259E–00	.SWITCH ASSY	1					
20	92990–05200	.WASHER, PLAIN	5					
21	6X6–48176–00	.GROMMET	1					
22	98580–04010	.SCREW, PAN HEAD	2					
23	6X6–48267–C0	.BOLT SET	2					
24	6X6–481A0–02	.REMO-CON. CASE ASSY	1					
25	6X6–48212–00	.BACK PLATE 1	1					

6X6 REMOTE CONTROL (SINGLE)

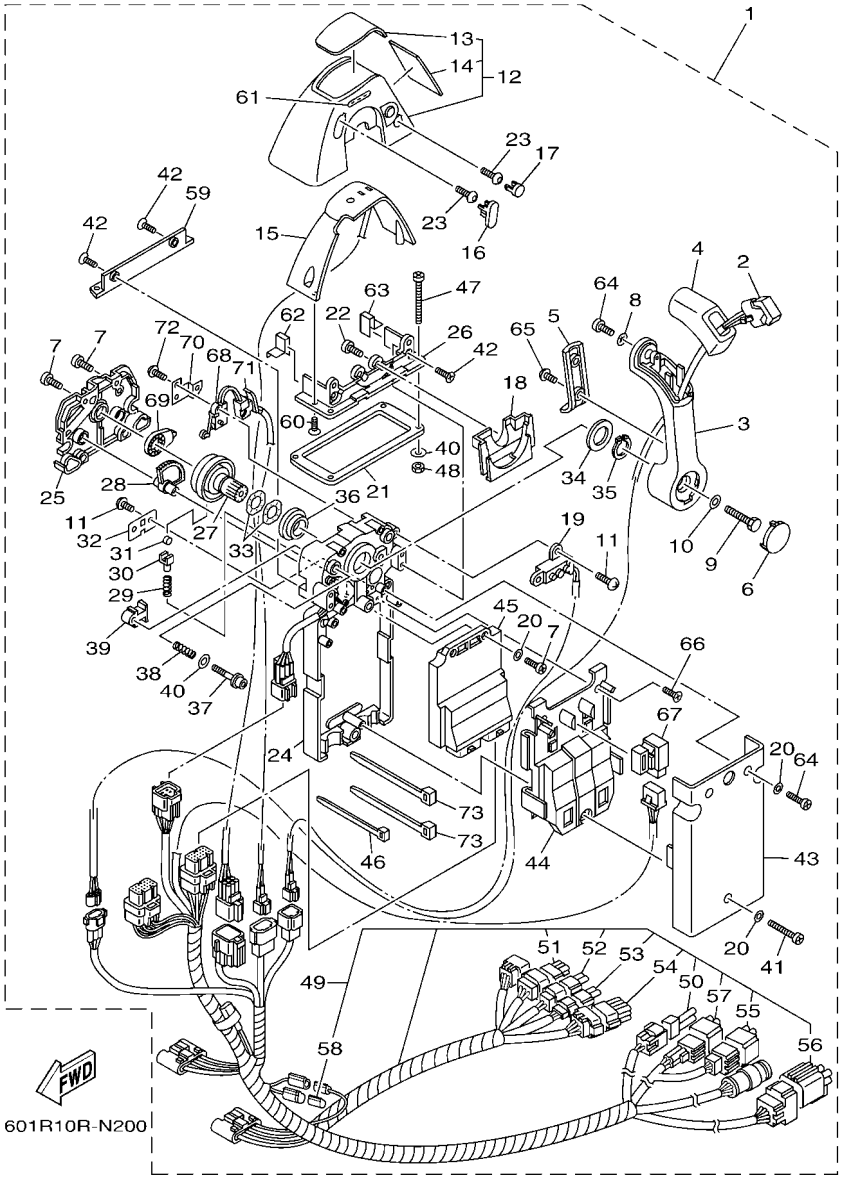

FIG. 16 DBW REMOTE CONTROL 1 (SINGLE)

REF. NO.	PART NO.	DESCRIPTION	601R					REMARKS
26	6X6–48144–10	.PLATE, STOPPER 2	1					
27	6X6–48242–02	.SHAFT, DRIVE	1					
28	6X6–48233–01	.GEAR 2	1					
29	6X6–48238–00	.SPRING, DETENT	1					
30	6X6–48237–00	.ADAPTOR	1					
31	6X6–48236–00	.ROLLER, DETENT	1					
32	6X6–48189–00	.RETAINER	1					
33	703–48198–00	.WASHER, WAVE	2					
34	6X6–48193–00	.WASHER 3	1					
35	6X6–48118–00	.CLIP, SHIFT LEVER	1					
36	6X6–48234–00	.BUSHING 1	1					
37	6X6–48267–00	.BOLT SET	1					
38	6X6–48158–00	.SPRING 1	1					
39	6X6–48264–00	.FRICTION, THROTTLE	1					
40	704–48287–00	.WASHER	5					
41	6X6–81145–01	.SCREW 1	1					
42	6X6–81147–00	.SCREW 3	4					
43	6X6–48213–00	.BACK PLATE 2	1					
44	6X6–48228–01	.HOLDER, SWITCH	1					
45	6X6–85590–21	.CONTROL UNIT ASSY	1					
46	703–82591–00	.BAND	2					
47	97780–50145	.SCREW, TAPPING	4					UR
	98580–05060	.SCREW, PAN HEAD	4					UR
48	95380–05600	.NUT	4					
49	6X6–82580–80	.WIRE HARNESS ASSY 2	1					FOR 6X6-48205-37
	6X6–82580–00	.WIRE HARNESS ASSY 2	1					FOR 6X6-48205-47
	6X6–82580–40	.WIRE HARNESS ASSY 2	1					FOR 6X6-48205-56

6X6 REMOTE CONTROL (SINGLE)

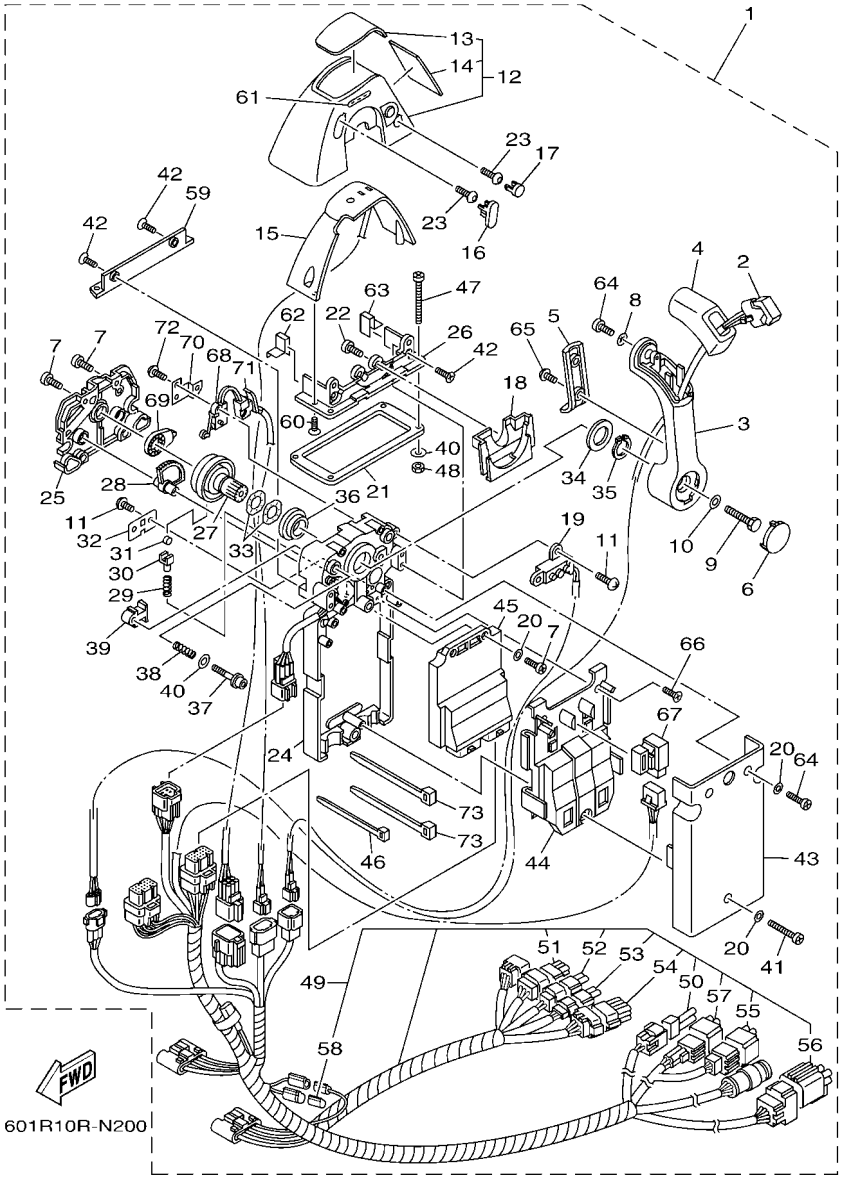

FIG. 16 DBW REMOTE CONTROL 1 (SINGLE)

REF. NO.	PART NO.	DESCRIPTION	601R					REMARKS
50	6X6–82585–20	..CAP 2 (2P)	1					
51	6X6–82582–60	..CAP 1 (6P)	1					FOR 6X6-82580-00
52	6X6–82582–40	..CAP 1 (4P)	1					FOR 6X6-82580-00
53	6X6–82582–A0	..CAP 1 (3P)	1					FOR 6X6-82580-00
54	6X6–82582–C0	..CAP 1 (12P)	1					FOR 6X6-82580-00
55	6X6–82585–60	..CAP 2 (6P)	1					FOR 6X6-82580-00/80
56	6X6–8257Y–70	..CAP 2 (6P)	1					FOR 6X6-82580-00
57	6Y8–82582–11	..CAP 1 (4PIN)	1					FOR 6X6-82580-00/80
58	6X6–82585–00	..CAP 2	1					FOR 6X6-82580-00/40
59	6X6–48144–00	.PLATE, STOPPER 2	1					
60	6X6–48129–01	.SCREW 3	2					
61	6X6–44191–00	.INDICATOR, SHIFT	1					
62	6X6–48176–50	.GROMMET	1					
63	6X6–48176–60	.GROMMET	1					
64	6X6–48127–01	.SCREW 1	3					
65	6X6–48128–00	.SCREW 2	2					
66	6X6–81146–01	.SCREW 2	2					
67	704–81950–10	.RELAY ASSY	1					
68	6X6–82540–00	.NEUTRAL SWITCH ASSY	1					
69	6X6–48241–00	.ARM, DRIVE	1					
70	6X6–48245–01	.PLATE, LOCK	1					
71	6X6–82545–00	.GROMMET	1					
72	6X6–8252V–00	.SCREW, SPECIAL	2					
73	703–82591–10	.BAND	4					

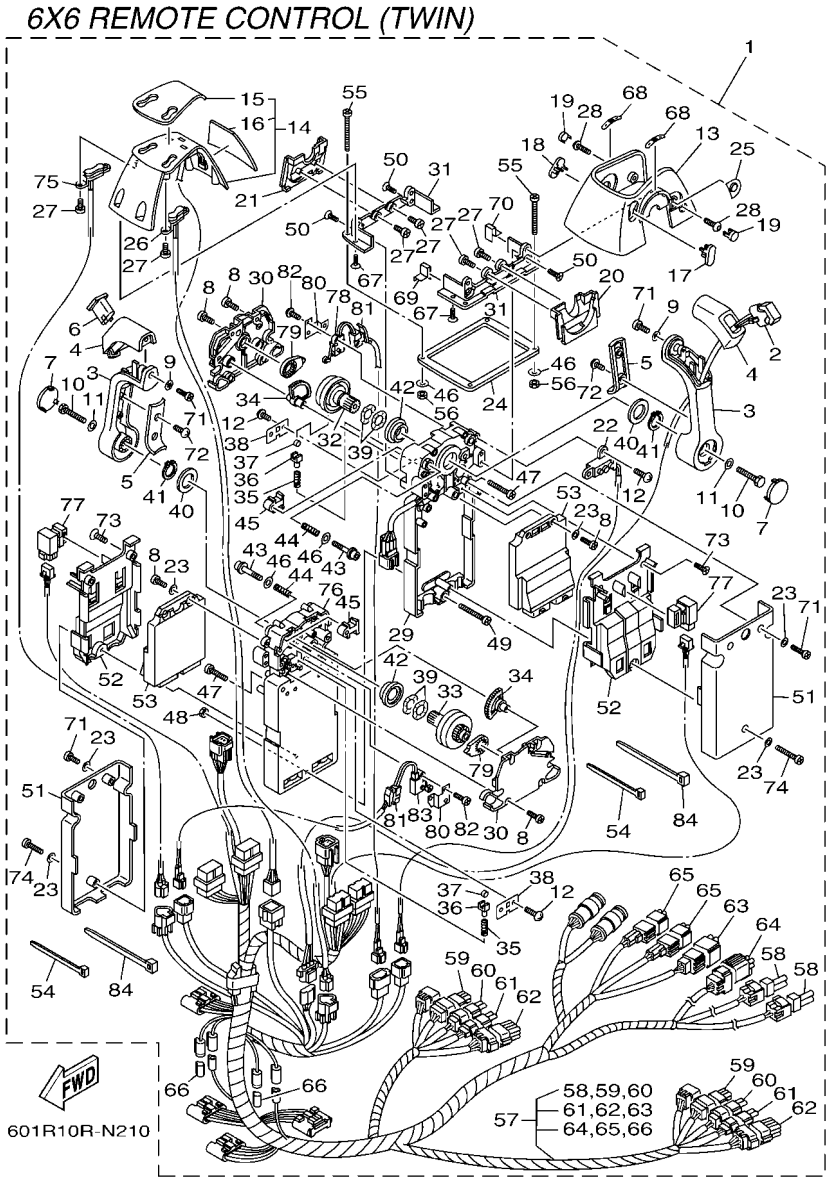

FIG. 17 DBW REMOTE CONTROL 2 (TWIN)

REF. NO.	PART NO.	DESCRIPTION	601R					REMARKS
1	6X6–48207–37	REMOTE CONTROL ASSY (TWIN)	1					NOT FOR SALE
	6X6–48207–47	REMOTE CONTROL ASSY (TWIN)	1					NOT FOR SALE
	6X6–48207–56	REMOTE CONTROL ASSY (TWIN)	1					NOT FOR SALE
2	6X6–82563–01	.TRIM & TILT SWITCH ASSY	1					
3	6X6–48221–00	.LEVER, CONTROL	2					
4	6X6–48222–00	.GRIP, CONTROL LEVER	2					
5	6X6–48224–00	.COVER, CONTROL LEVER	2					
6	6X6–48222–10	.GRIP, CONTROL LEVER	1					
7	6X6–48224–10	.COVER, CONTROL LEVER	2					
8	98580–05014	.SCREW, PAN HEAD	12					
9	92990–05300	.WASHER, INTERNAL TOOTH	2					
10	6X6–48171–00	.BOLT	2					
11	92990–08600	.WASHER, PLATE	2					
12	EL8–48127–00	.SCREW 1	6					
13	6X6–48119–10	.COVER	1					
14	6X6–84301–13	.PILOT LIGHT ASSY 1	1					
15	6X6–48215–40	..GRAPHIC	1					
16	6X6–48216–10	..GRAPHIC	1					
17	6X6–48167–10	.PLUG	1					
18	6X6–48167–20	.PLUG	1					
19	6X6–48167–60	.PLUG	2					
20	6X6–48219–10	.COVER, LEAD	1					
21	6X6–48219–20	.COVER, LEAD	1					
22	6X6–8259E–00	.SWITCH ASSY	1					
23	92990–05200	.WASHER, PLAIN	10					
24	6X6–48176–10	.GROMMET	1					
25	6X6–48225–00	.COVER	1					

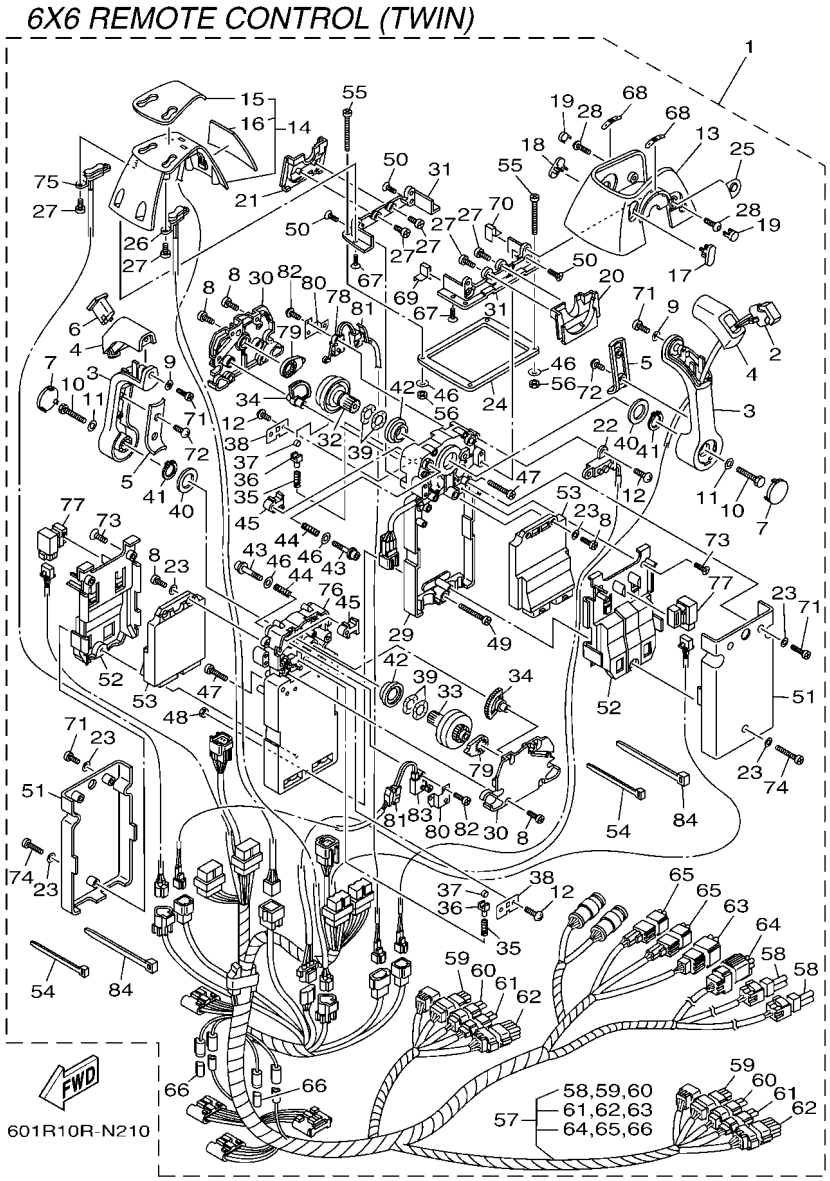

FIG. 17 DBW REMOTE CONTROL 2 (TWIN)

REF. NO.	PART NO.	DESCRIPTION	601R					REMARKS
26	6X6–82563–40	.TRIM & TILT SWITCH ASSY	1					
27	98580–04010	.SCREW, PAN HEAD	8					
28	6X6–48267–C0	.BOLT SET	2					
29	6X6–481A0–02	.REMO-CON. CASE ASSY	1					
30	6X6–48212–00	.BACK PLATE 1	2					
31	6X6–48144–10	.PLATE, STOPPER 2	2					
32	6X6–48242–02	.SHAFT, DRIVE	1					
33	6X6–48242–12	.SHAFT, DRIVE	1					
34	6X6–48233–01	.GEAR 2	2					
35	6X6–48238–00	.SPRING, DETENT	2					
36	6X6–48237–00	.ADAPTOR	2					
37	6X6–48236–00	.ROLLER, DETENT	2					
38	6X6–48189–00	.RETAINER	2					
39	703–48198–00	.WASHER, WAVE	4					
40	6X6–48193–00	.WASHER 3	2					
41	6X6–48118–00	.CLIP, SHIFT LEVER	2					
42	6X6–48234–00	.BUSHING 1	2					
43	6X6–48267–00	.BOLT SET	2					
44	6X6–48158–00	.SPRING 1	2					
45	6X6–48264–00	.FRICTION, THROTTLE	2					
46	704–48287–00	.WASHER	6					
47	98580–05025	.SCREW, PAN HEAD	2					
48	704–48156–00	.NUT 1	1					
49	704–48283–00	.SCREW	1					
50	6X6–81147–00	.SCREW 3	4					
51	6X6–48213–00	.BACK PLATE 2	2					
52	6X6–48228–01	.HOLDER, SWITCH	2					

6X6 REMOTE CONTROL (TWIN)

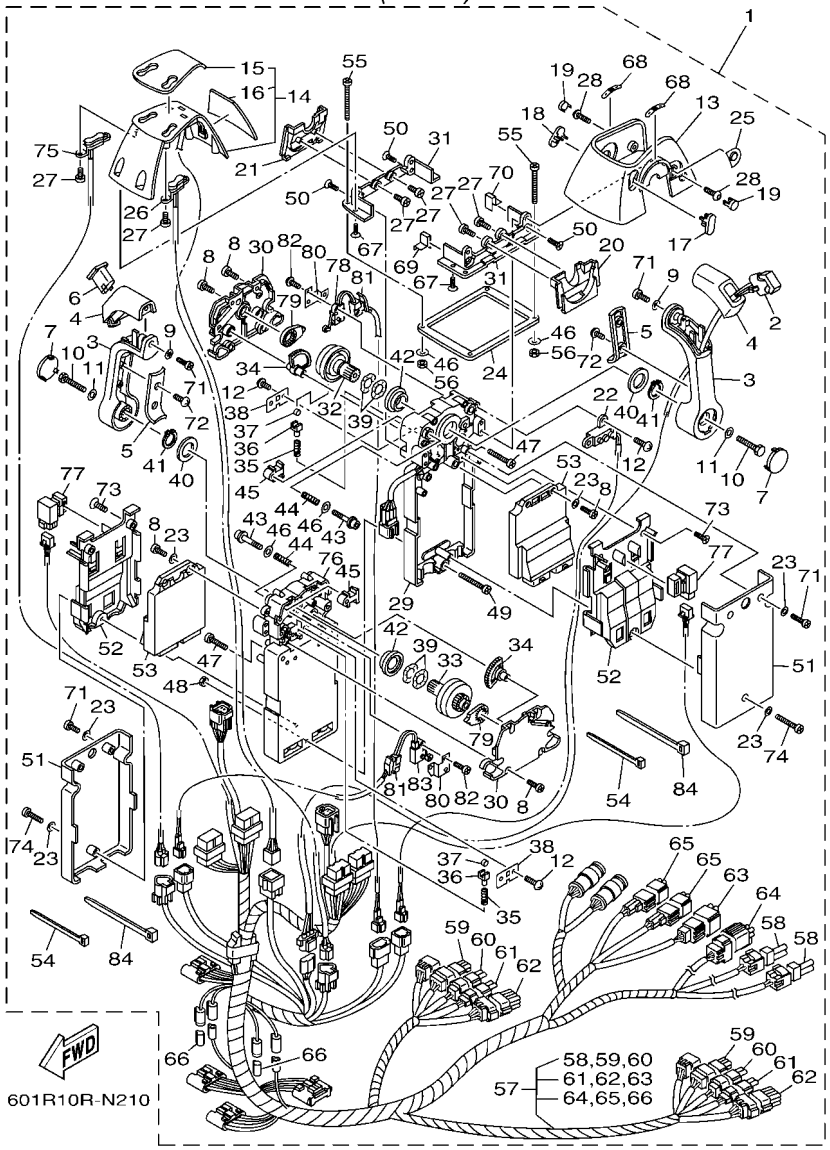

FIG. 17 DBW REMOTE CONTROL 2 (TWIN)

REF. NO.	PART NO.	DESCRIPTION	601R					REMARKS
53	6X6–85590–21	.CONTROL UNIT ASSY	2					
54	703–82591–00	.BAND	4					
55	97780–50145	.SCREW, TAPPING	4					UR
	98580–05060	.SCREW, PAN HEAD	4					UR
56	95380–05600	.NUT	4					
57	6X6–82580–90	.WIRE HARNESS ASSY 2	1					FOR 6X6-48207-37
	6X6–82580–10	.WIRE HARNESS ASSY 2	1					FOR 6X6-48207-47
	6X6–82580–50	.WIRE HARNESS ASSY 2	1					FOR 6X6-48207-56
58	6X6–82585–20	..CAP 2 (2P)	2					
59	6X6–82582–60	..CAP 1 (6P)	2					FOR 6X6-82580-10
60	6X6–82582–40	..CAP 1 (4P)	2					FOR 6X6-82580-10
61	6X6–82582–A0	..CAP 1 (3P)	2					FOR 6X6-82580-10
62	6X6–82582–C0	..CAP 1 (12P)	2					FOR 6X6-82580-10
63	6X6–82585–70	..CAP 2 (6P)	1					FOR 6X6-82580-10/90
64	6X6–8257Y–70	..CAP 2 (6P)	1					FOR 6X6-82580-10
65	6Y8–82582–11	..CAP 1 (4PIN)	2					FOR 6X6-82580-10/90
66	6X6–82585–00	..CAP 2	2					
67	6X6–48129–01	.SCREW 3	4					
68	6X6–44191–00	.INDICATOR, SHIFT	2					
69	6X6–48176–50	.GROMMET	1					
70	6X6–48176–60	.GROMMET	1					
71	6X6–48127–01	.SCREW 1	6					
72	6X6–48128–00	.SCREW 2	4					
73	6X6–81146–01	.SCREW 2	4					
74	6X6–81145–01	.SCREW 1	2					
75	6X6–82563–50	.TRIM & TILT SWITCH ASSY	1					
76	6X6–481A0–22	.REMO-CON. CASE ASSY	1					

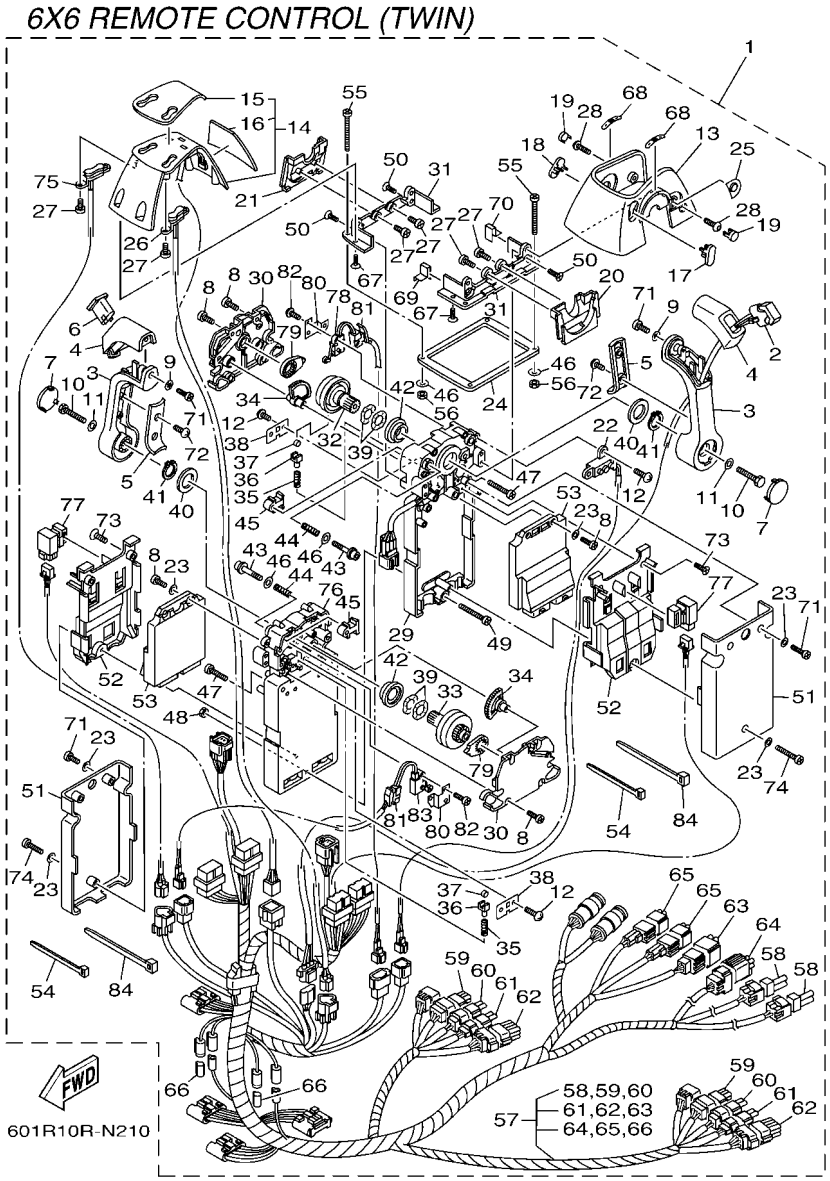

FIG. 17 DBW REMOTE CONTROL 2 (TWIN)

REF. NO.	PART NO.	DESCRIPTION	601R					REMARKS
77	704–81950–10	.RELAY ASSY	2					
78	6X6–82540–00	.NEUTRAL SWITCH ASSY	1					
79	6X6–48241–00	.ARM, DRIVE	2					
80	6X6–48245–01	.PLATE, LOCK	2					
81	6X6–82545–00	.GROMMET	2					
82	6X6–8252V–00	.SCREW, SPECIAL	4					
83	6X6–82540–10	.NEUTRAL SWITCH ASSY	1					
84	703–82591–10	.BAND	8					

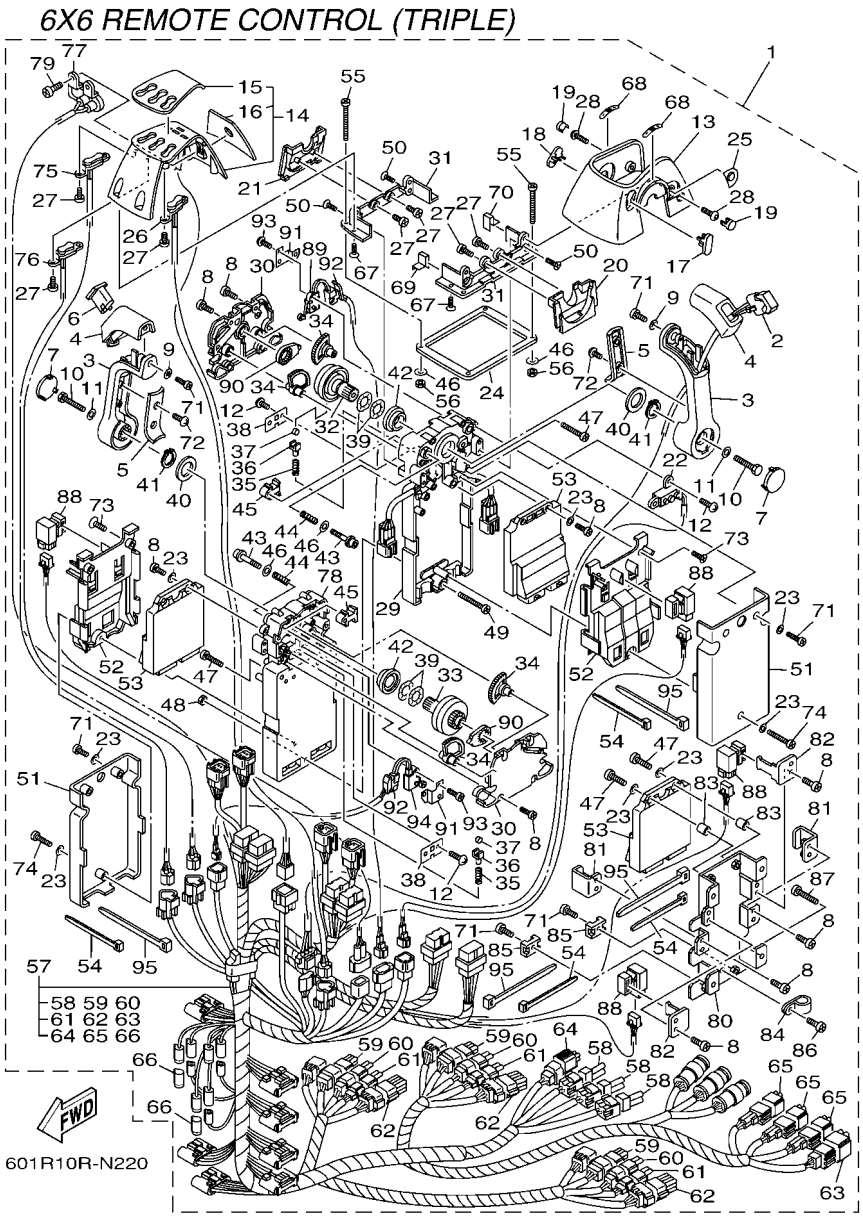

FIG. 18 DBW REMOTE CONTROL 3 (TRIPLE)

REF. NO.	PART NO.	DESCRIPTION	601R					REMARKS
1	6X6–48208–47	REMOTE CONTROL ASSY (TRIPLE)	1					NOT FOR SALE
	6X6–48208–56	REMOTE CONTROL ASSY (TRIPLE)	1					NOT FOR SALE
2	6X6–82563–01	.TRIM & TILT SWITCH ASSY	1					
3	6X6–48221–00	.LEVER, CONTROL	2					
4	6X6–48222–00	.GRIP, CONTROL LEVER	2					
5	6X6–48224–00	.COVER, CONTROL LEVER	2					
6	6X6–48222–10	.GRIP, CONTROL LEVER	1					
7	6X6–48224–10	.COVER, CONTROL LEVER	2					
8	98580–05014	.SCREW, PAN HEAD	20					
9	92990–05300	.WASHER, INTERNAL TOOTH	2					
10	6X6–48171–00	.BOLT	2					
11	92990–08600	.WASHER, PLATE	2					
12	EL8–48127–00	.SCREW 1	6					
13	6X6–48119–10	.COVER	1					
14	6X6–84301–23	.PILOT LIGHT ASSY 1	1					
15	6X6–48215–50	..GRAPHIC	1					
16	6X6–48216–20	..GRAPHIC	1					
17	6X6–48167–10	.PLUG	1					
18	6X6–48167–20	.PLUG	1					
19	6X6–48167–60	.PLUG	2					
20	6X6–48219–10	.COVER, LEAD	1					
21	6X6–48219–20	.COVER, LEAD	1					
22	6X6–8259E–00	.SWITCH ASSY	1					
23	92990–05200	.WASHER, PLAIN	12					
24	6X6–48176–10	.GROMMET	1					
25	6X6–48225–00	.COVER	1					
26	6X6–82563–40	.TRIM & TILT SWITCH ASSY	1					

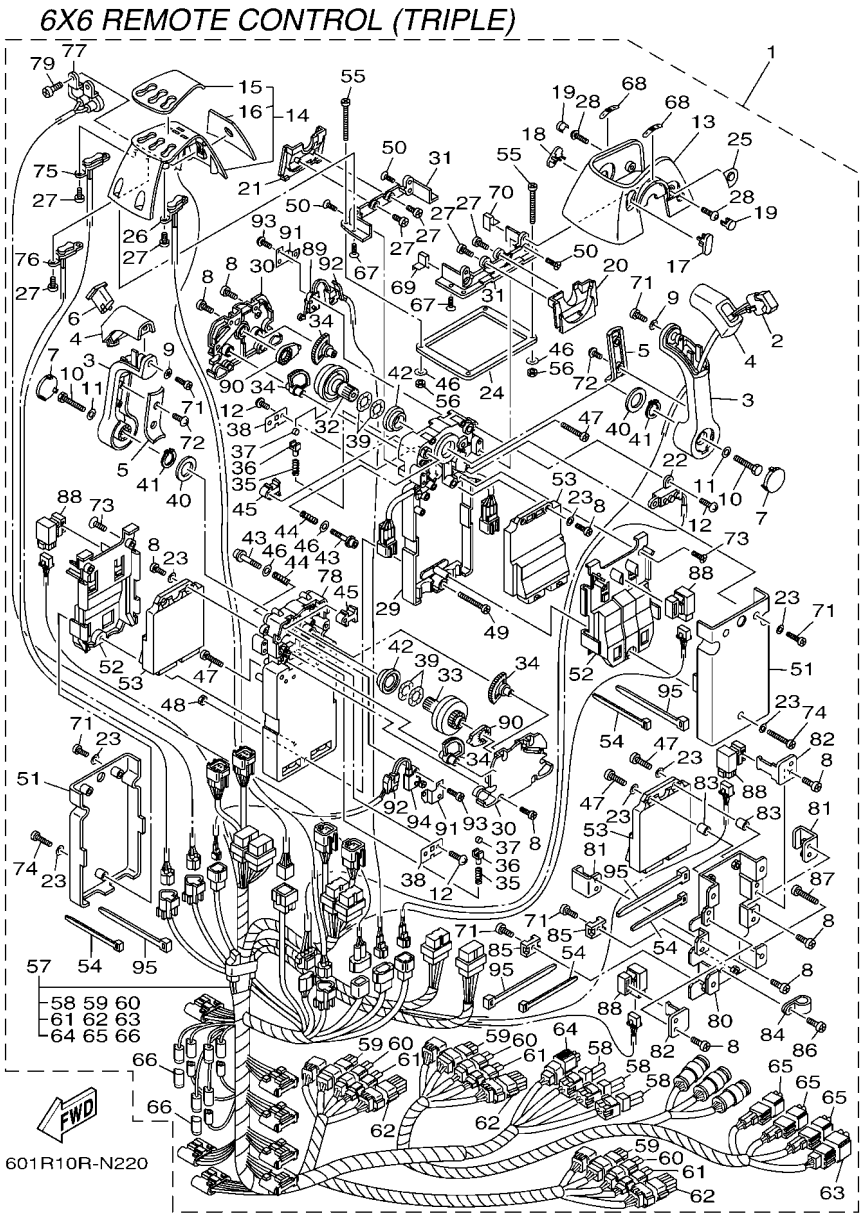

FIG. 18 DBW REMOTE CONTROL 3 (TRIPLE)

REF. NO.	PART NO.	DESCRIPTION	601R					REMARKS
27	98580–04010	.SCREW, PAN HEAD	10					
28	6X6–48267–C0	.BOLT SET	2					
29	6X6–481A0–12	.REMO-CON. CASE ASSY	1					
30	6X6–48212–00	.BACK PLATE 1	2					
31	6X6–48144–10	.PLATE, STOPPER 2	2					
32	6X6–48242–02	.SHAFT, DRIVE	1					
33	6X6–48242–12	.SHAFT, DRIVE	1					
34	6X6–48233–01	.GEAR 2	4					
35	6X6–48238–00	.SPRING, DETENT	2					
36	6X6–48237–00	.ADAPTOR	2					
37	6X6–48236–00	.ROLLER, DETENT	2					
38	6X6–48189–00	.RETAINER	2					
39	703–48198–00	.WASHER, WAVE	4					
40	6X6–48193–00	.WASHER 3	2					
41	6X6–48118–00	.CLIP, SHIFT LEVER	2					
42	6X6–48234–00	.BUSHING 1	2					
43	6X6–48267–00	.BOLT SET	2					
44	6X6–48158–00	.SPRING 1	2					
45	6X6–48264–00	.FRICTION, THROTTLE	2					
46	704–48287–00	.WASHER	6					
47	98580–05025	.SCREW, PAN HEAD	4					
48	704–48156–00	.NUT 1	1					
49	704–48283–00	.SCREW	1					
50	6X6–81147–00	.SCREW 3	4					
51	6X6–48213–00	.BACK PLATE 2	2					
52	6X6–48228–01	.HOLDER, SWITCH	2					
53	6X6–85590–21	.CONTROL UNIT ASSY	3					

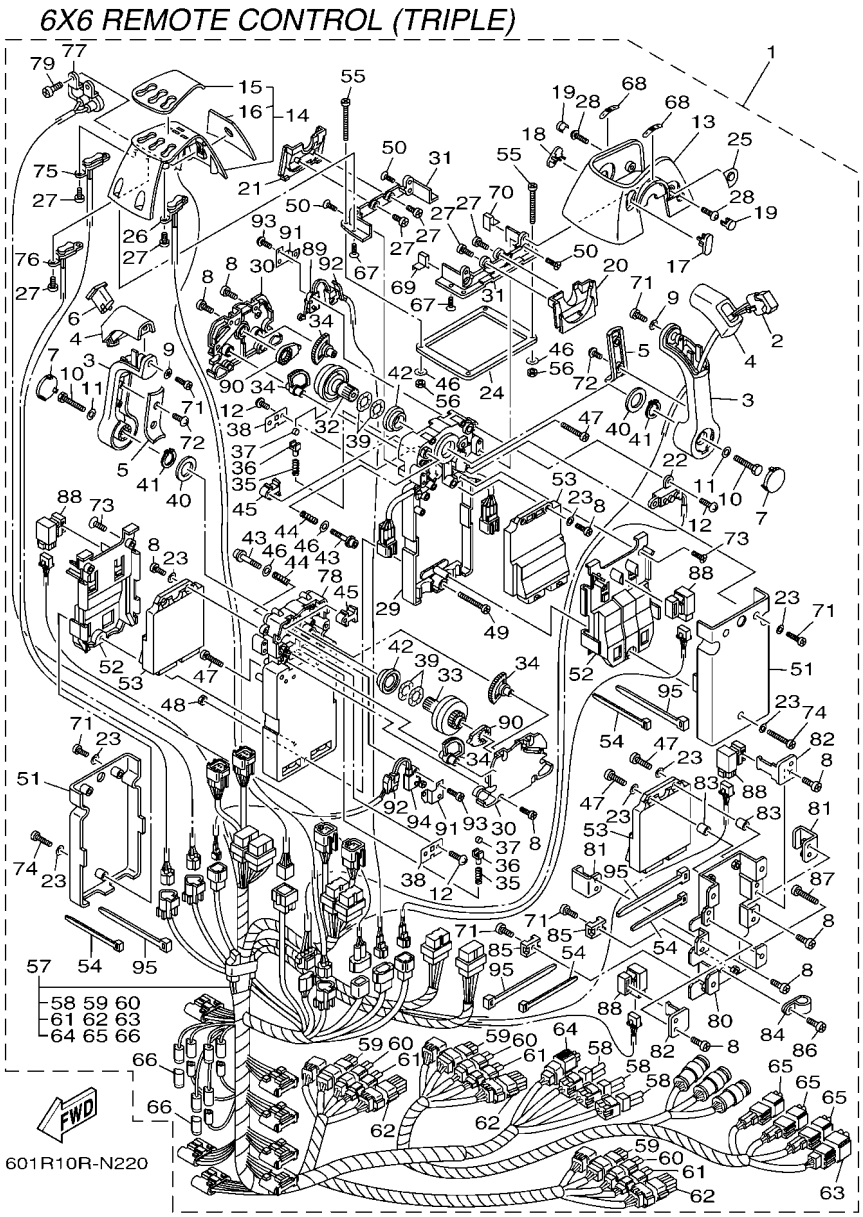

FIG. 18 DBW REMOTE CONTROL 3 (TRIPLE)

REF. NO.	PART NO.	DESCRIPTION	601R					REMARKS
54	703–82591–00	.BAND	8					
55	97780–50145	.SCREW, TAPPING	4					UR
	98580–05060	.SCREW, PAN HEAD	4					UR
56	95380–05600	.NUT	4					
57	6X6–82580–20	.WIRE HARNESS ASSY 2	1					FOR 6X6-48208-47
	6X6–82580–60	.WIRE HARNESS ASSY 2	1					FOR 6X6-48208-56
58	6X6–82585–20	..CAP 2 (2P)	3					
59	6X6–82582–60	..CAP 1 (6P)	3					FOR 6X6-82580-20
60	6X6–82582–40	..CAP 1 (4P)	3					FOR 6X6-82580-20
61	6X6–82582–A0	..CAP 1 (3P)	3					FOR 6X6-82580-20
62	6X6–82582–C0	..CAP 1 (12P)	3					FOR 6X6-82580-20
63	6X6–82585–70	..CAP 2 (6P)	1					FOR 6X6-82580-20
64	6X6–8257Y–70	..CAP 2 (6P)	1					FOR 6X6-82580-20
65	6Y8–82582–11	..CAP 1 (4PIN)	3					FOR 6X6-82580-20
66	6X6–82585–00	..CAP 2	3					
67	6X6–48129–01	.SCREW 3	4					
68	6X6–44191–00	.INDICATOR, SHIFT	2					
69	6X6–48176–50	.GROMMET	1					
70	6X6–48176–60	.GROMMET	1					
71	6X6–48127–01	.SCREW 1	8					
72	6X6–48128–00	.SCREW 2	4					
73	6X6–81146–01	.SCREW 2	4					
74	6X6–81145–01	.SCREW 1	2					
75	6X6–82563–50	.TRIM & TILT SWITCH ASSY	1					
76	6X6–82563–60	.TRIM & TILT SWITCH ASSY	1					
77	6X6–8259F–10	.SWITCH ASSY	1					
78	6X6–481A0–32	.REMO-CON. CASE ASSY	1					

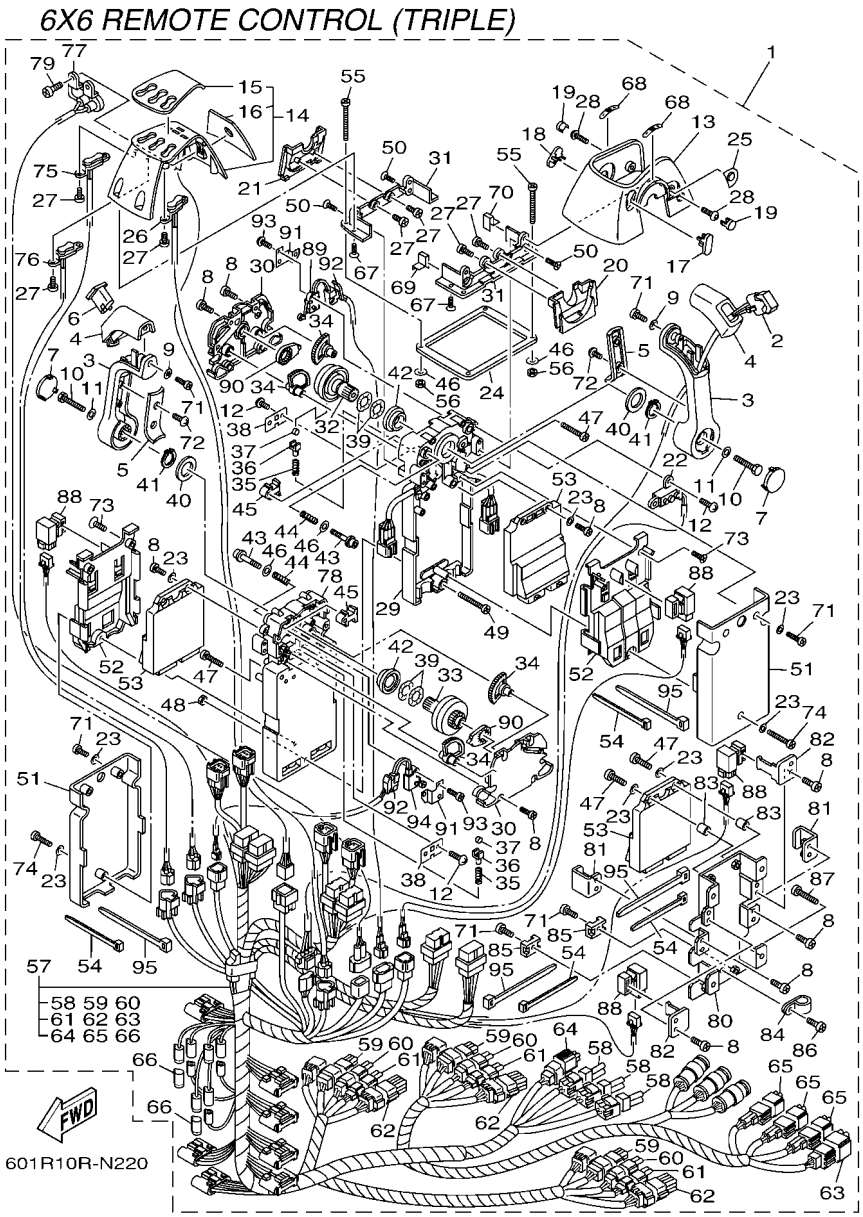

FIG. 18 DBW REMOTE CONTROL 3 (TRIPLE)

REF. NO.	PART NO.	DESCRIPTION	601R					REMARKS
79	98780–05010	.SCREW, FLAT HEAD	2					
80	6X6–48211–10	.HOUSING,1	1					
81	6X6–85557–00	.HOLDER	2					
82	6X6–82591–00	.BAND	2					
83	6X6–8252S–00	.SPACER, 1	2					
84	6X6–82584–00	.CLAMP	1					
85	6X6–82581–00	.STAY, CORD CLAMP	2					
86	6X7–48127–00	.SCREW 1	1					
87	6X0–48128–00	.SCREW(M6X30)	4					
88	704–81950–10	.RELAY ASSY	4					
89	6X6–82540–00	.NEUTRAL SWITCH ASSY	1					
90	6X6–48241–00	.ARM, DRIVE	2					
91	6X6–48245–01	.PLATE, LOCK	2					
92	6X6–82545–00	.GROMMET	2					
93	6X6–8252V–00	.SCREW, SPECIAL	4					
94	6X6–82540–10	.NEUTRAL SWITCH ASSY	1					
95	703–82591–10	.BAND	8					

6X6 REMOTE CONTROL (QUAD)

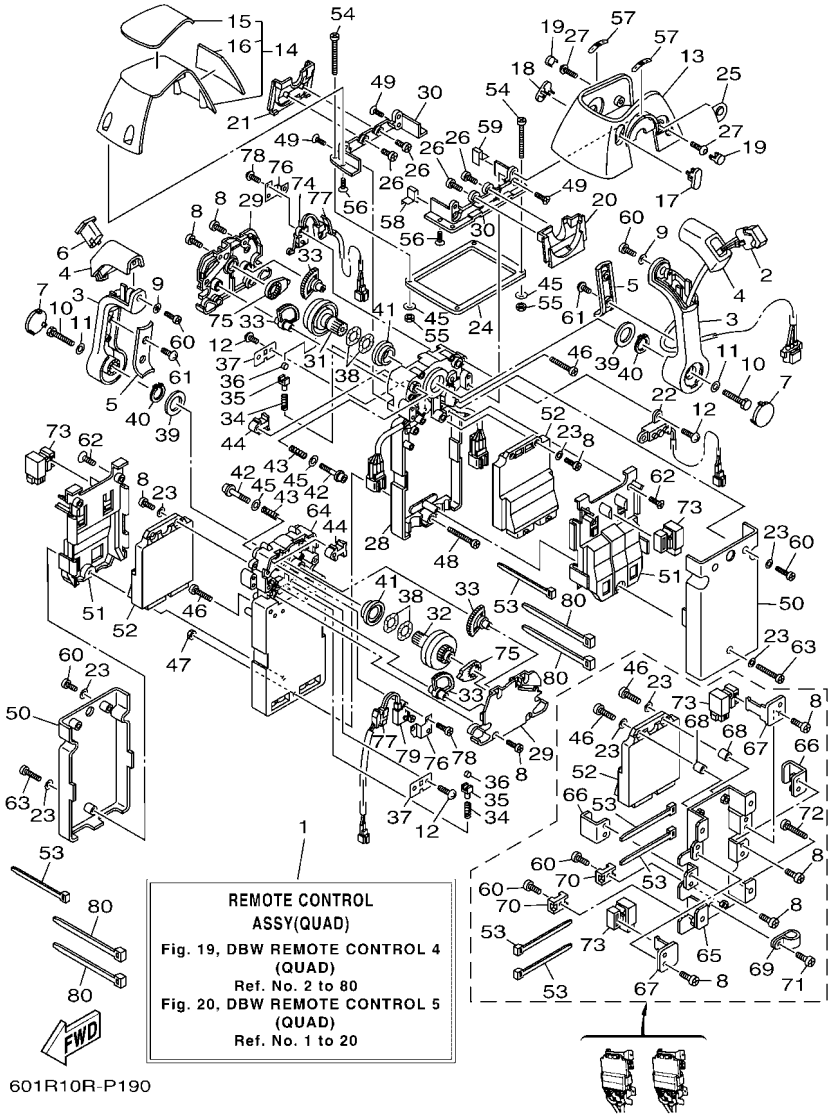

FIG. 19 DBW REMOTE CONTROL 4 (QUAD)

REF. NO.	PART NO.	DESCRIPTION	601R					REMARKS
1	6X6–48209–07	REMOTE CONTROL ASSY (QUAD)	1					NOT FOR SALE
	6X6–48209–16	REMOTE CONTROL ASSY (QUAD)	1					NOT FOR SALE
2	6X6–82563–01	TRIM & TILT SWITCH ASSY	1					
3	6X6–48221–00	LEVER, CONTROL	2					
4	6X6–48222–00	GRIP, CONTROL LEVER	2					
5	6X6–48224–00	COVER, CONTROL LEVER	2					
6	6X6–48222–10	GRIP, CONTROL LEVER	1					
7	6X6–48224–10	COVER, CONTROL LEVER	2					
8	98580–05014	SCREW, PAN HEAD	28					
9	92990–05300	WASHER, INTERNAL TOOTH	2					
10	6X6–48171–00	BOLT	2					
11	92990–08600	WASHER, PLATE	2					
12	EL8–48127–00	SCREW 1	6					
13	6X6–48119–10	COVER	1					
14	6X6–84301–30	PILOT LIGHT ASSY 1	1					
15	6X6–48215–70	.GRAPHIC	1					
16	6X6–48216–10	.GRAPHIC	1					
17	6X6–48167–10	PLUG	1					
18	6X6–48167–20	PLUG	1					
19	6X6–48167–60	PLUG	2					
20	6X6–48219–10	COVER, LEAD	1					
21	6X6–48219–20	COVER, LEAD	1					
22	6X6–8259E–00	SWITCH ASSY	1					
23	92990–05200	WASHER, PLAIN	14					
24	6X6–48176–10	GROMMET	1					
25	6X6–48225–00	COVER	1					
26	98580–04010	SCREW, PAN HEAD	4					

6X6 REMOTE CONTROL (QUAD)

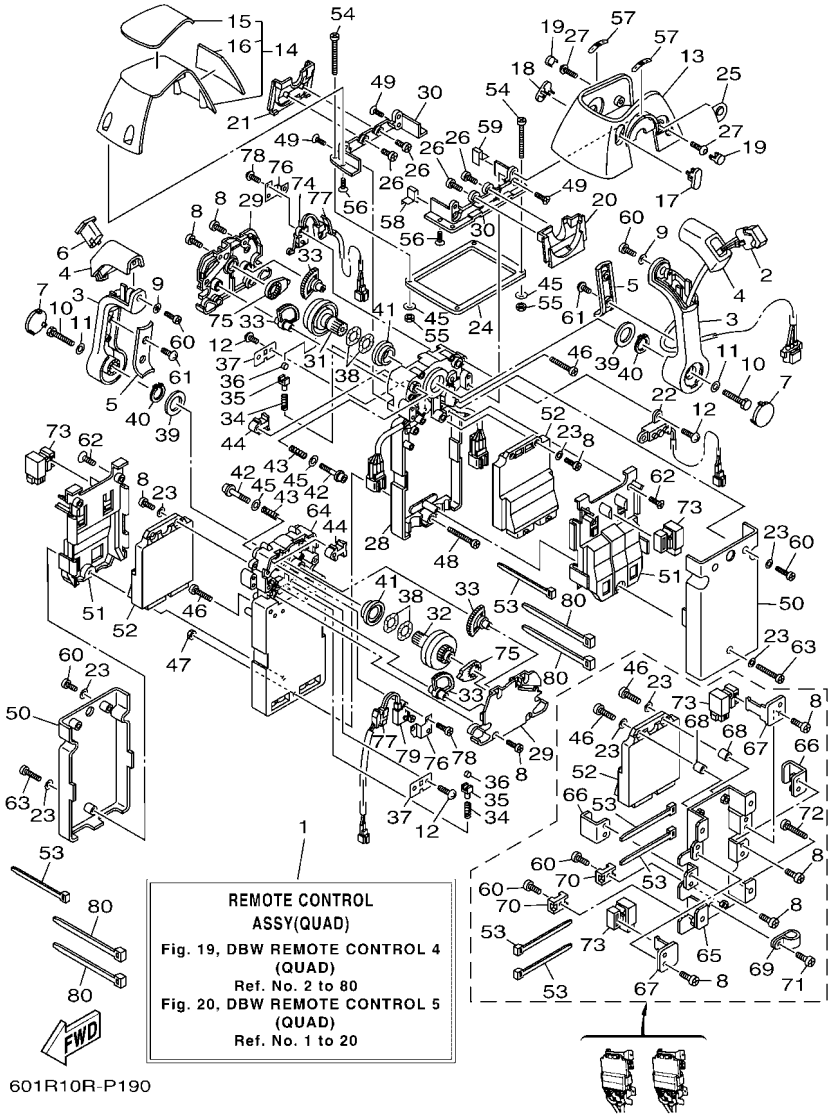

FIG. 19 DBW REMOTE CONTROL 4 (QUAD)

REF. NO.	PART NO.	DESCRIPTION	601R					REMARKS
27	6X6–48267–C0	BOLT SET	2					
28	6X6–481A0–12	REMO-CON. CASE ASSY	1					
29	6X6–48212–00	BACK PLATE 1	2					
30	6X6–48144–10	PLATE, STOPPER 2	2					
31	6X6–48242–02	SHAFT, DRIVE	1					
32	6X6–48242–12	SHAFT, DRIVE	1					
33	6X6–48233–01	GEAR 2	4					
34	6X6–48238–00	SPRING, DETENT	2					
35	6X6–48237–00	ADAPTOR	2					
36	6X6–48236–00	ROLLER, DETENT	2					
37	6X6–48189–00	RETAINER	2					
38	703–48198–00	WASHER, WAVE	4					
39	6X6–48193–00	WASHER 3	2					
40	6X6–48118–00	CLIP, SHIFT LEVER	2					
41	6X6–48234–00	BUSHING 1	2					
42	6X6–48267–00	BOLT SET	2					
43	6X6–48158–00	SPRING 1	2					
44	6X6–48264–00	FRICTION, THROTTLE	2					
45	704–48287–00	WASHER	6					
46	98580–05025	SCREW, PAN HEAD	6					
47	704–48156–00	NUT 1	1					
48	704–48283–00	SCREW	1					
49	6X6–81147–00	SCREW 3	4					
50	6X6–48213–00	BACK PLATE 2	2					
51	6X6–48228–01	HOLDER, SWITCH	2					
52	6X6–85590–21	CONTROL UNIT ASSY	4					
53	703–82591–00	BAND	12					

6X6 REMOTE CONTROL (QUAD)

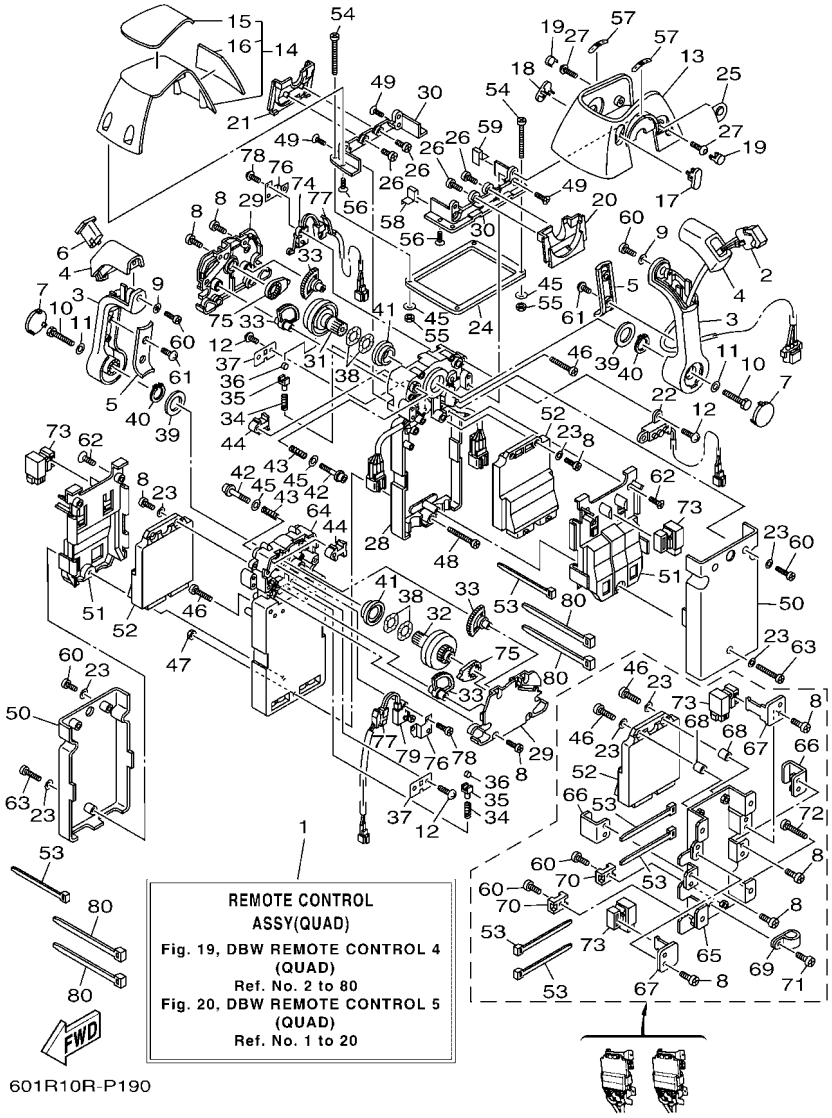

FIG. 19 DBW REMOTE CONTROL 4 (QUAD)

REF. NO.	PART NO.	DESCRIPTION	601R					REMARKS
54	97780–50145	SCREW, TAPPING	4					UR
	98580–05060	SCREW, PAN HEAD	4					UR
55	95380–05600	NUT	4					
56	6X6–48129–01	SCREW 3	4					
57	6X6–44191–00	INDICATOR, SHIFT	2					
58	6X6–48176–50	GROMMET	1					
59	6X6–48176–60	GROMMET	1					
60	6X6–48127–01	SCREW 1	10					
61	6X6–48128–00	SCREW 2	4					
62	6X6–81146–01	SCREW 2	4					
63	6X6–81145–01	SCREW 1	2					
64	6X6–481A0–32	REMO-CON. CASE ASSY	1					
65	6X6–48211–10	HOUSING,1	2					
66	6X6–85557–00	HOLDER	4					
67	6X6–82591–00	BAND	4					
68	6X6–8252S–00	SPACER, 1	4					
69	6X6–82584–00	CLAMP	2					
70	6X6–82581–00	STAY, CORD CLAMP	4					
71	6X7–48127–00	SCREW 1	2					
72	6X0–48128–00	SCREW(M6X30)	8					
73	704–81950–10	RELAY ASSY	6					
74	6X6–82540–00	NEUTRAL SWITCH ASSY	1					
75	6X6–48241–00	ARM, DRIVE	2					
76	6X6–48245–01	PLATE, LOCK	2					
77	6X6–82545–00	GROMMET	2					
78	6X6–8252V–00	SCREW, SPECIAL	4					
79	6X6–82540–10	NEUTRAL SWITCH ASSY	1					

6X6 REMOTE CONTROL (QUAD)

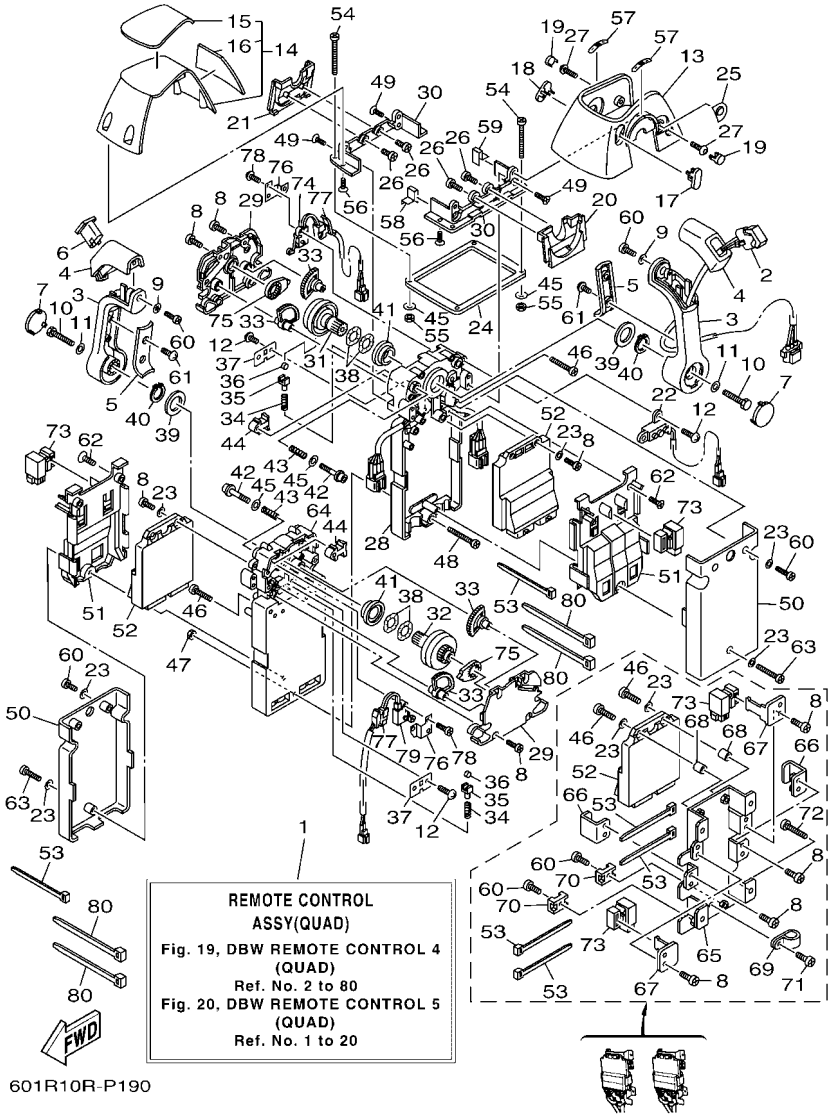

FIG. 19 DBW REMOTE CONTROL 4 (QUAD)

REF. NO.	PART NO.	DESCRIPTION	601R					REMARKS
80	703–82591–10	BAND	8					

FIG. 20 DBW REMOTE CONTROL 5 (QUAD)

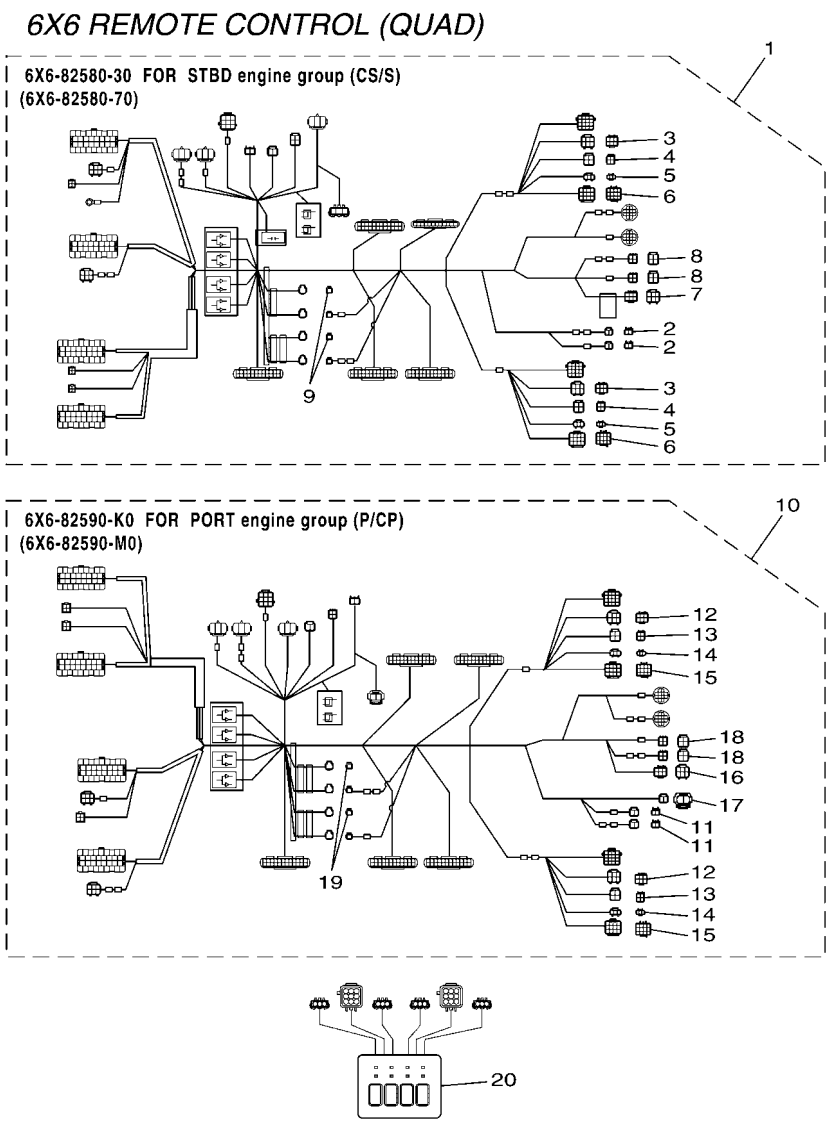

REF. NO.	PART NO.	DESCRIPTION	601R					REMARKS
1	6X6–82580–30	WIRE HARNESS ASSY 2	1					FOR 6X6-48209-07
	6X6–82580–70	WIRE HARNESS ASSY 2	1					FOR 6X6-48209-16
2	6X6–82585–20	.CAP 2 (2P)	2					
3	6X6–82582–60	.CAP 1 (6P)	2					FOR 6X6-82580-30
4	6X6–82582–40	.CAP 1 (4P)	2					FOR 6X6-82580-30
5	6X6–82582–A0	.CAP 1 (3P)	2					FOR 6X6-82580-30
6	6X6–82582–C0	.CAP 1 (12P)	2					FOR 6X6-82580-30
7	6X6–82585–70	.CAP 2 (6P)	1					FOR 6X6-82580-30
8	6Y8–82582–11	.CAP 1 (4PIN)	2					FOR 6X6-82580-30
9	6X6–82585–00	.CAP 2	2					
10	6X6–82590–K0	WIRE HARNESS ASSY	1					FOR 6X6-48209-07
	6X6–82590–M0	WIRE HARNESS ASSY	1					FOR 6X6-48209-16
11	6X6–82585–20	.CAP 2 (2P)	2					
12	6X6–82582–60	.CAP 1 (6P)	2					FOR 6X6-82590-K0
13	6X6–82582–40	.CAP 1 (4P)	2					FOR 6X6-82590-K0
14	6X6–82582–A0	.CAP 1 (3P)	2					FOR 6X6-82590-K0
15	6X6–82582–C0	.CAP 1 (12P)	2					FOR 6X6-82590-K0
16	6X6–82585–70	.CAP 2 (6P)	1					FOR 6X6-82590-K0
17	6X6–8257Y–00	.CAP	1					FOR 6X6-82590-K0
18	6Y8–82582–11	.CAP 1 (4PIN)	2					FOR 6X6-82590-K0
19	6X6–82585–00	.CAP 2	2					
20	6X6–82570–N1	PANEL SWITCH ASSY	1					

REMOTE CONTROL SPECIFICATION LIST (6X7 TYPE)

TYPE : 6X7	MECHANICAL SPECIFICATION						
TYPE : 6X7	LIST UP SEC.	TYPE CODE	ENGINE			HANDLE POSITION	
PART NO.	FIG.NO.-REF.NO.		SINGLE	TWIN	TRIPLE	RIGHT	LEFT
6X7-48206-13	21-1	A	○	*	*	○	*

6X7 REMOTE CONTROL

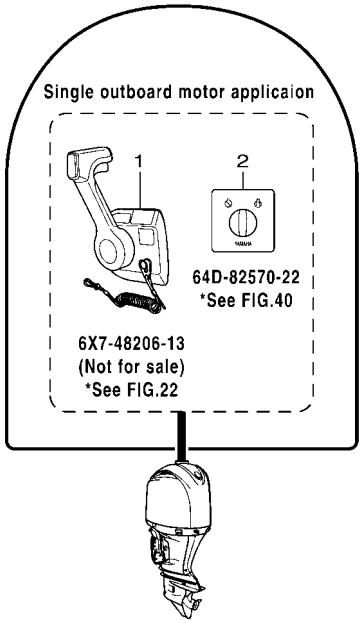

601R10R-Q210

FIG. 21 LAYOUT CHART 5 (6X7)

REF. NO.	PART NO.	DESCRIPTION	601R					REMARKS
1	6X7–48206–13	REMOTE CONTROL ASSY	1					NOT FOR SALE
2	64D–82570–22	PANEL SWITCH ASSY	1					

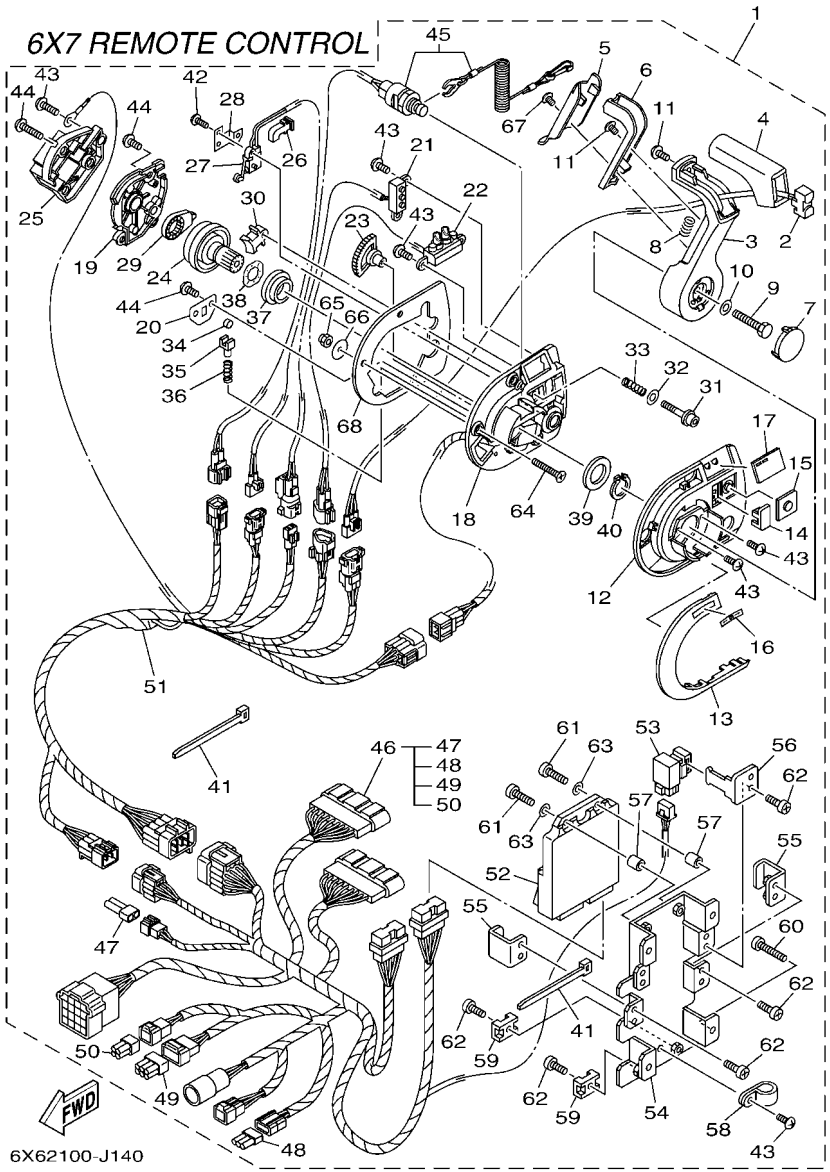

FIG. 22 DBW REMOTE CONTROL 6 (6X7)

REF. NO.	PART NO.	DESCRIPTION	601R					REMARKS
1	6X7–48206–13	REMOTE CONTROL ASSY	1					NOT FOR SALE
2	6X7–82563–00	.TRIM & TILT SWITCH ASSY	1					
3	6X7–48221–00	.LEVER, CONTROL	1					
4	6X7–48222–00	.GRIP, CONTROL LEVER	1					
5	6X7–48224–00	.COVER, CONTROL LEVER	1					
6	6X7–48223–00	.LOCK, NEUTRAL	1					
7	6X7–48224–10	.COVER, CONTROL LEVER	1					
8	703–48227–00	.SPRING, NEUTRAL LOCK	1					
9	6X6–48171–00	.BOLT	1					
10	92990–08600	.WASHER, PLATE	1					
11	6X6–48128–00	.SCREW 2	2					
12	6X7–48119–00	.COVER	1					
13	6X7–48167–10	.PLUG	1					
14	6X7–48167–00	.PLUG	1					
15	6X7–48225–00	.COVER	1					
16	6X7–44191–00	.INDICATOR, SHIFT	1					
17	6X7–48215–10	.GRAPHIC	1					
18	6X7–481A0–01	.REMO-CON. CASE ASSY	1					
19	6X7–48212–00	.BACK PLATE 1	1					
20	6X7–48189–00	.RETAINER	1					
21	6X7–8259E–00	.SWITCH ASSY	1					
22	6X7–84301–00	.PILOT LIGHT ASSY 1	1					
23	6X7–48233–00	.GEAR 2	1					
24	6X7–48242–00	.SHAFT, DRIVE	1					
25	6X7–48228–00	.HOLDER, SWITCH	1					
26	6X7–82545–00	.GROMMET	1					
27	6X6–82540–00	.NEUTRAL SWITCH ASSY	1					

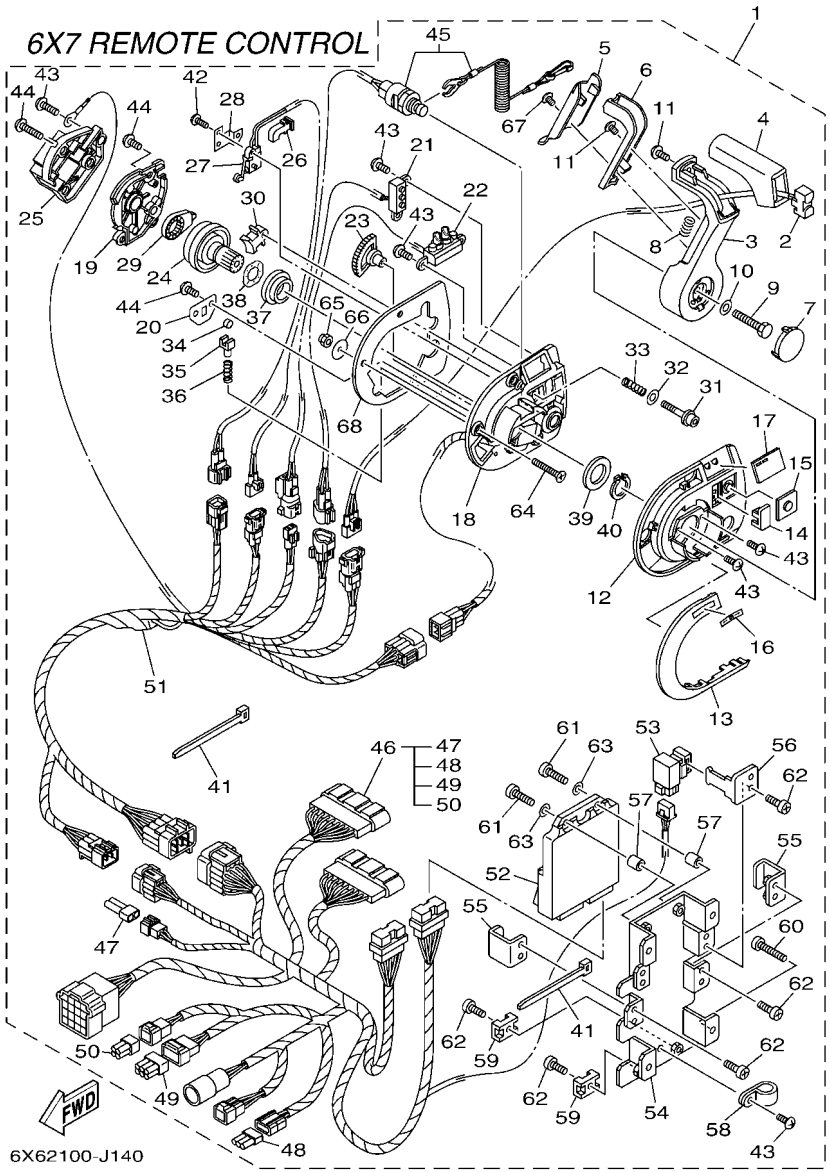

FIG. 22 DBW REMOTE CONTROL 6 (6X7)

REF. NO.	PART NO.	DESCRIPTION	601R					REMARKS
28	6X6–48245–01	.PLATE, LOCK	1					
29	6X6–48241–00	.ARM, DRIVE	1					
30	6X6–48264–00	.FRICTION, THROTTLE	1					
31	6X6–48267–00	.BOLT SET	1					
32	704–48287–00	.WASHER	1					
33	6X6–48158–00	.SPRING 1	1					
34	6X6–48236–00	.ROLLER, DETENT	1					
35	6X6–48237–00	.ADAPTOR	1					
36	6X6–48238–00	.SPRING, DETENT	1					
37	6X6–48234–00	.BUSHING 1	1					
38	703–48198–00	.WASHER, WAVE	1					
39	6X6–48193–00	.WASHER 3	1					
40	6X6–48118–00	.CLIP, SHIFT LEVER	1					
41	703–82591–00	.BAND	4					
42	6X6–8252V–00	.SCREW, SPECIAL	2					
43	6X7–48127–00	.SCREW 1	8					
44	EL8–48127–00	.SCREW 1	8					
45	6X7–82575–01	.ENGINE STOP SWITCH ASSY	1					
46	6X7–82590–40	.WIRE HARNESS ASSY	1					
47	6X6–82585–20	..CAP 2 (2P)	1					
48	6X6–82582–A0	..CAP 1 (3P)	1					
49	6X6–82585–60	..CAP 2 (6P)	1					
50	6Y8–82582–11	..CAP 1 (4PIN)	1					
51	6X7–82590–20	.WIRE HARNESS ASSY	1					
52	6X6–85590–21	.CONTROL UNIT ASSY	1					
53	704–81950–10	.RELAY ASSY	1					
54	6X6–48211–10	.HOUSING,1	1					

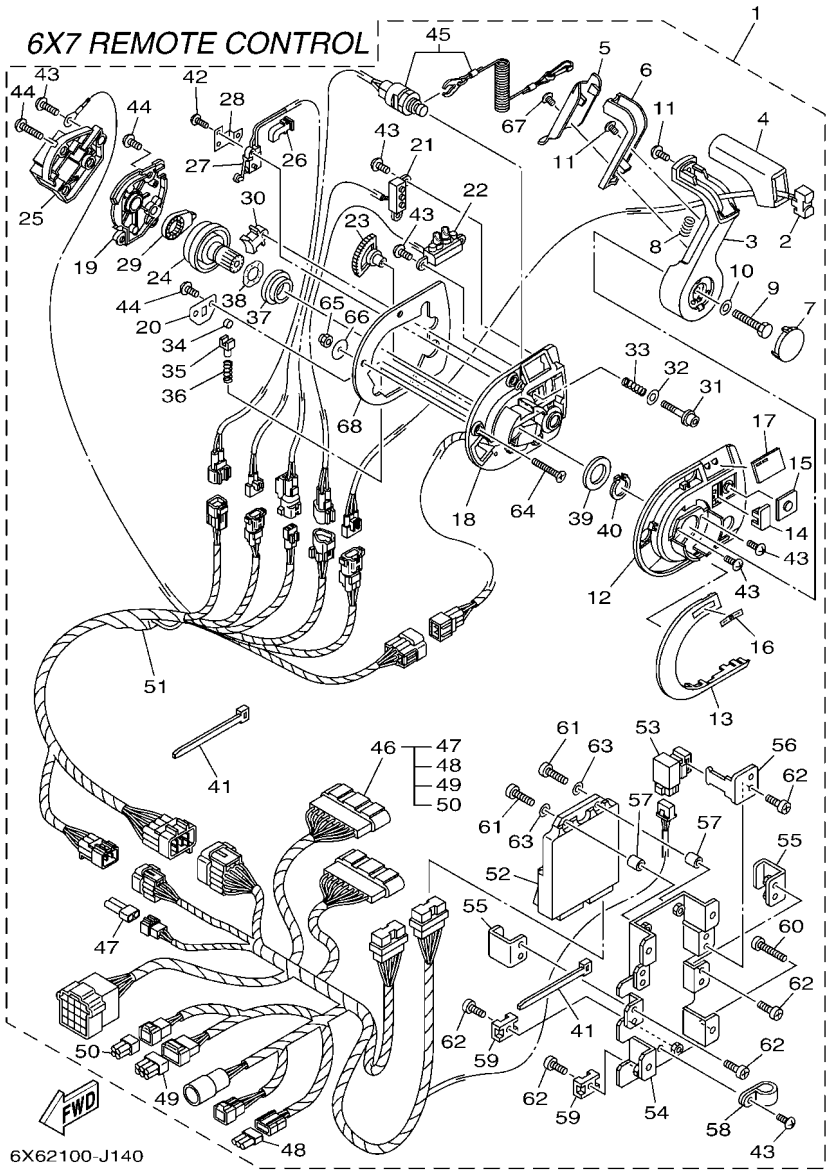

FIG. 22 DBW REMOTE CONTROL 6 (6X7)

REF. NO.	PART NO.	DESCRIPTION	601R					REMARKS
55	6X6–85557–00	.HOLDER	2					
56	6X6–82591–00	.BAND	1					
57	6X6–8252S–00	.SPACER, 1	2					
58	6X6–82584–00	.CLAMP	1					
59	6X6–82581–00	.STAY, CORD CLAMP	2					
60	6X0–48128–00	.SCREW(M6X30)	4					
61	98580–05025	.SCREW, PAN HEAD	2					
62	98580–05014	.SCREW, PAN HEAD	8					
63	92990–05200	.WASHER, PLAIN	2					
64	98780–06035	.SCREW, FLAT HEAD	3					UR
	97780–06230	.SCREW, TAPPING	3					UR
65	6X0–48156–00	.NUT 1	3					
66	701–48287–00	.WASHER	3					
67	6X7–48128–00	.SCREW 2	1					
68	6X7–48176–10	.GROMMET	1					

FIG. 23 SWITCH & PANEL 1

SINGLE IG SWITCH W/ PANEL

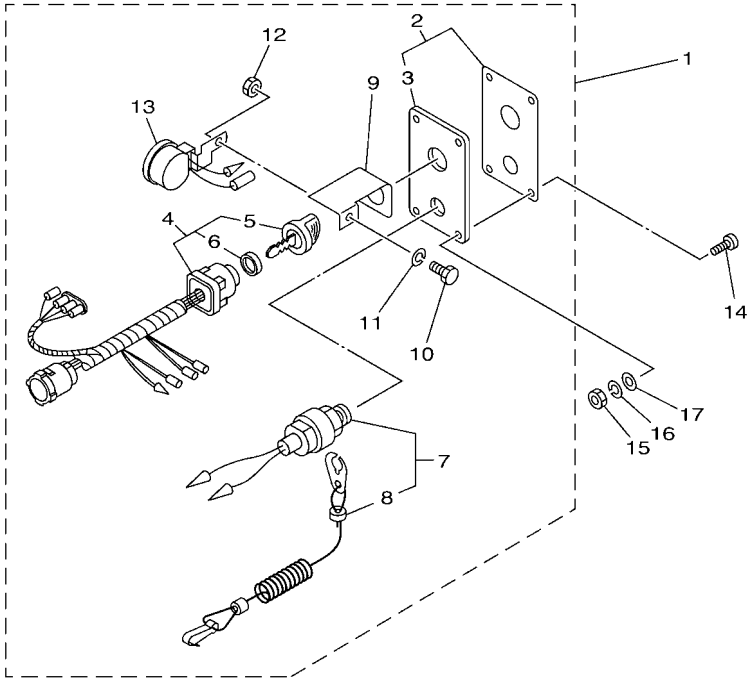

601R10R-Q230

REF. NO.	PART NO.	DESCRIPTION	601R					REMARKS
1	704–82570–12	PANEL SWITCH ASSY	1					WITH CHOKE SW.
2	704–82571–02	.PANEL, SWITCH	1					
3	6R5–82588–01	..PLATE	1					
4	704–82510–0A	.MAIN SWITCH ASSY	1					
5	703–82577–00	..CAP, KEY	1					
6	6K1–82532–00	..CAP	1					
7	688–82575–02	.ENGINE STOP SWITCH ASSY	1					
8	682–82556–00	..LANYARD, STOP SWITCH	1					
9	64D–82581–00	.STAY, CORD CLAMP	1					
10	97303–05012	.BOLT	1					
11	92903–05100	.WASHER, SPRING	1					
12	95303–05700	.NUT	1					
13	688–83383–12	.BUZZER	1					
14	90149–05M05	SCREW	4					
15	95380–05600	NUT	4					
16	92990–05100	WASHER, SPRING	4					
17	92990–05600	WASHER, PLATE	4					

FIG. 24 SWITCH & PANEL 2

SINGLE IG SWITCH W/ PANEL
(FOR PRIME START or DIGITAL NETWORK SYSTEM-6Y8)

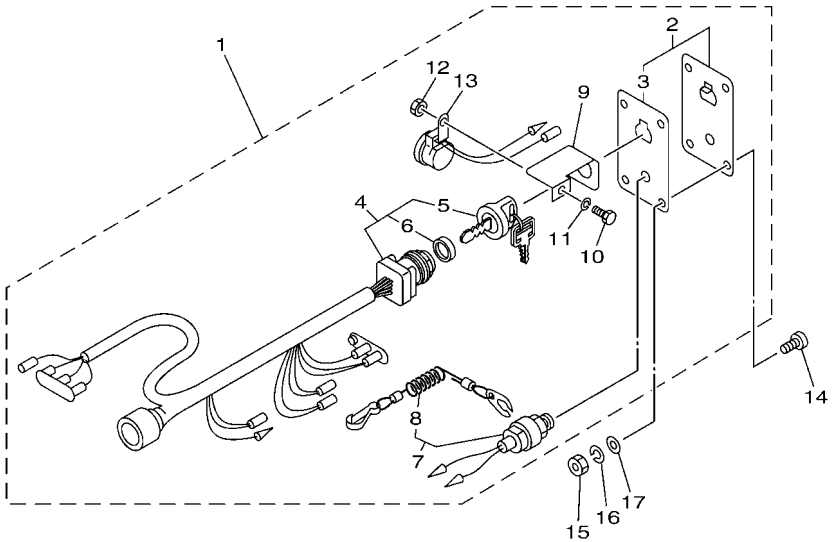

601R10R-Q240

REF. NO.	PART NO.	DESCRIPTION	601R					REMARKS
1	6R5–82570–07	PANEL SWITCH ASSY	1					WITHOUT CHOKE SW.
2	704–82571–02	.PANEL, SWITCH	1					
3	6R5–82588–01	..PLATE	1					
4	6R5–82510–03	.MAIN SWITCH ASSY	1					
5	676–82577–01	..CAP, KEY	1					
6	703–82532–00	..CAP	1					
7	688–82575–02	.ENGINE STOP SWITCH ASSY	1					
8	682–82556–00	..LANYARD, STOP SWITCH	1					
9	64D–82581–00	.STAY, CORD CLAMP	1					
10	97303–05012	.BOLT	1					
11	92903–05100	.WASHER, SPRING	1					
12	95303–05700	.NUT	1					
13	6R5–83383–00	.BUZZER	1					
14	90149–05M05	SCREW	4					
15	95303–05600	NUT	4					
16	92903–05100	WASHER, SPRING	4					
17	92903–05600	WASHER, PLATE	4					

FIG. 25 SWITCH & PANEL 3

SINGLE IG SWITCH W/O PANEL

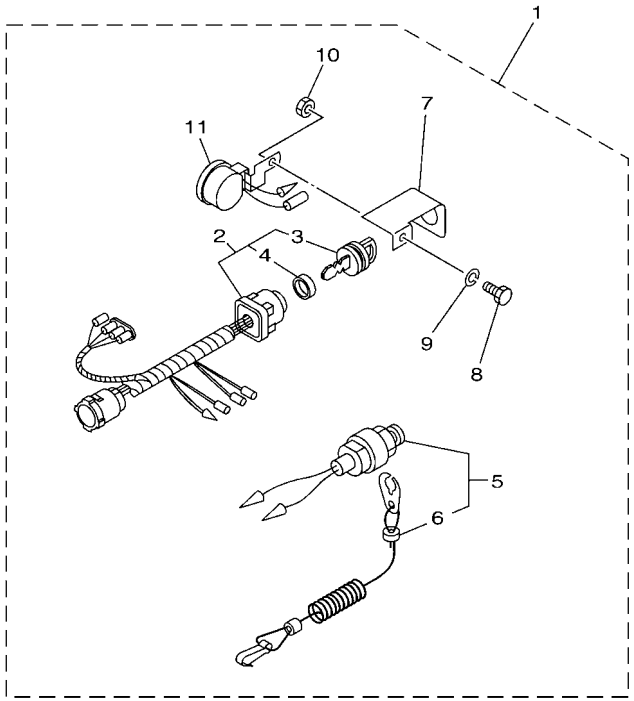

601R10R-Q250

REF. NO.	PART NO.	DESCRIPTION	601R					REMARKS
1	704–8257C–03	PANEL SWITCH COMP. 2	1					WITH CHOKE SW.
2	704–82510–0A	.MAIN SWITCH ASSY	1					
3	703–82577–00	..CAP, KEY	1					
4	6K1–82532–00	..CAP	1					
5	688–82575–02	.ENGINE STOP SWITCH ASSY	1					
6	682–82556–00	..LANYARD, STOP SWITCH	1					
7	64D–82581–00	.STAY, CORD CLAMP	1					
8	97303–05012	.BOLT	1					
9	92903–05100	.WASHER, SPRING	1					
10	95303–05700	.NUT	1					
11	688–83383–12	.BUZZER	1					

DIGITAL NETWORK SYSTEM-6Y9
(SINGLE : 1 & 2 STATION-MAIN)

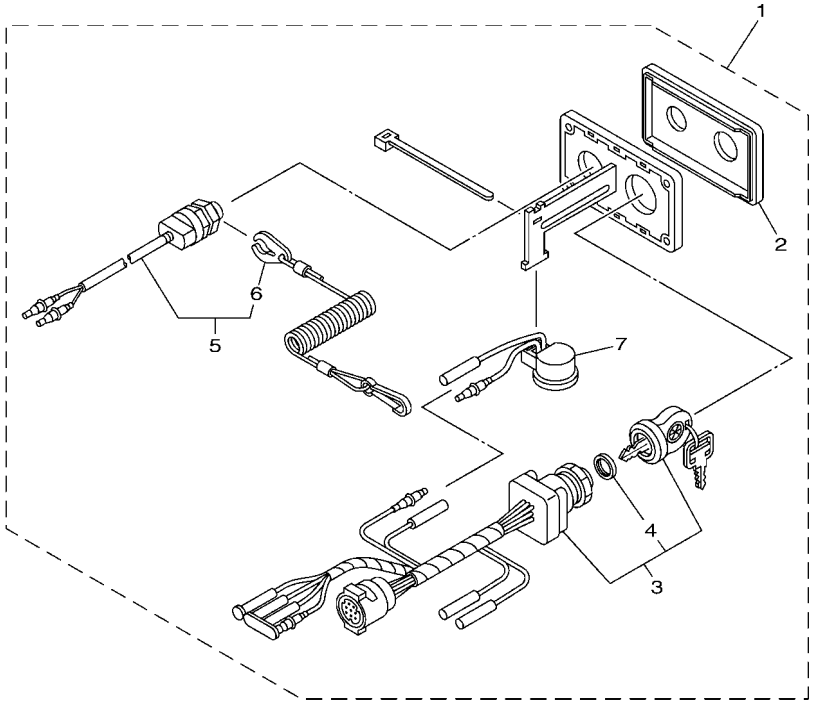

601R10R-Q260

FIG. 26 SWITCH & PANEL 4

REF. NO.	PART NO.	DESCRIPTION	601R					REMARKS
1	6X6–82570–33	PANEL SWITCH ASSY	1					1 & 2 STATION MAIN
2	6X6–82571–00	.PANEL, SWITCH	1					
3	6X6–82510–01	.MAIN SWITCH ASSY	1					
4	703–82532–00	..CAP	1					
5	688–82575–12	.ENGINE STOP SWITCH ASSY	1					
6	682–82556–00	..LANYARD, STOP SWITCH	1					
7	703–83383–A0	.BUZZER	1					

DIGITAL NETWORK SYSTEM-6Y9
(SINGLE : 2 STATION-SUB)

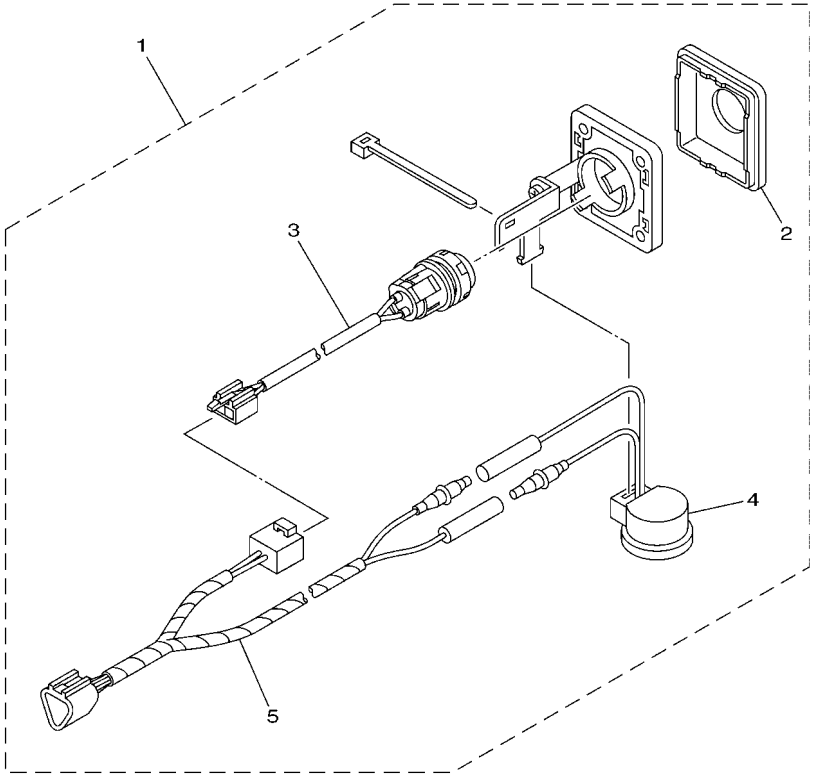

601R10R-K300

FIG. 27 SWITCH & PANEL 5

REF. NO.	PART NO.	DESCRIPTION	601R					REMARKS
1	6X6–82570–80	PANEL SWITCH ASSY	1					2 STATION SUB
2	6X6–82571–40	.PANEL, SWITCH	1					
3	6X6–8259E–20	.SWITCH ASSY	1					
4	703–83383–A0	.BUZZER	1					
5	6X6–82716–20	.CORD SWITCH	1					

FIG. 28 SWITCH & PANEL 6

TWIN IG SWITCH

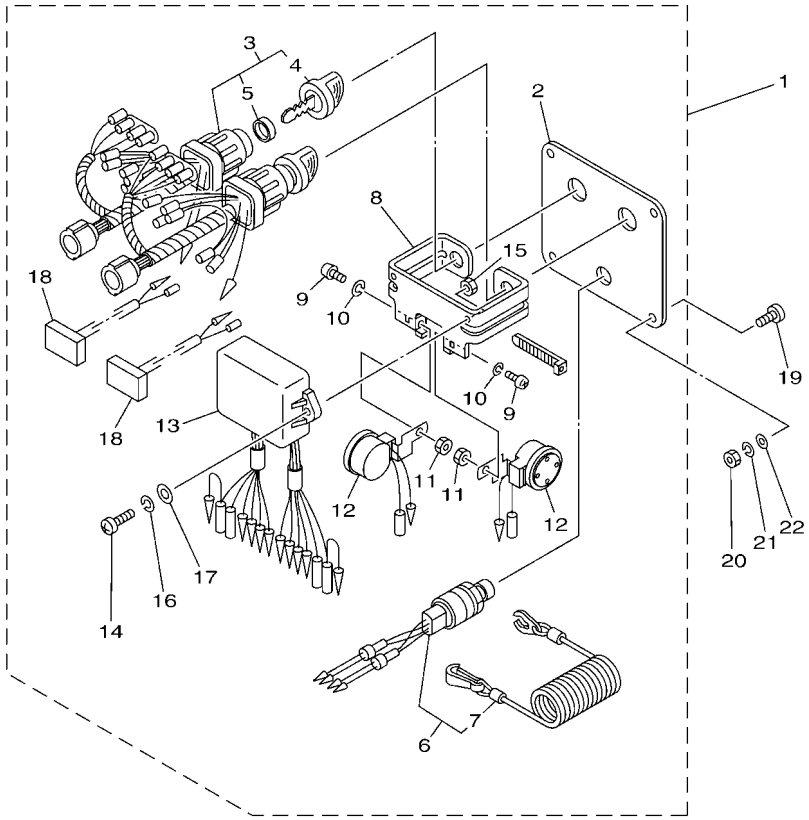

601R10R-M310

REF. NO.	PART NO.	DESCRIPTION	601R					REMARKS
1	6K1–82570–13	PANEL SWITCH ASSY	1					WITH CHOKE SW.
2	6K1–82571–02	.PLATE, PANEL SWITCH	1					
3	6K1–82510–07	.MAIN SWITCH ASSY	2					
4	703–82577–00	..CAP, KEY	1					
5	6K1–82532–00	..CAP	1					
6	6K1–82575–01	.ENGINE STOP SWITCH ASSY	1					
7	682–82556–00	..LANYARD, STOP SWITCH	1					
8	6K1–83614–01	.BRACKET	1					
9	98980–05010	.SCREW, BIND	2					
10	92990–05100	.WASHER, SPRING	2					
11	95380–05600	.NUT	2					
12	688–83383–12	.BUZZER	2					
13	6K1–85830–02	.CONTROL UNIT ASSY	1					
14	98980–06020	.SCREW, BIND	2					
15	95380–06600	.NUT, HEXAGON	2					
16	92990–06100	.WASHER, SPRING	2					
17	92990–06600	.WASHER, PLATE	2					
18	6K1–81980–00	.DIODE ASSY	2					
19	90149–05M05	SCREW	4					
20	95380–05600	NUT	4					
21	92990–05100	WASHER, SPRING	4					
22	92990–05600	WASHER, PLATE	4					

TWIN IG SWITCH

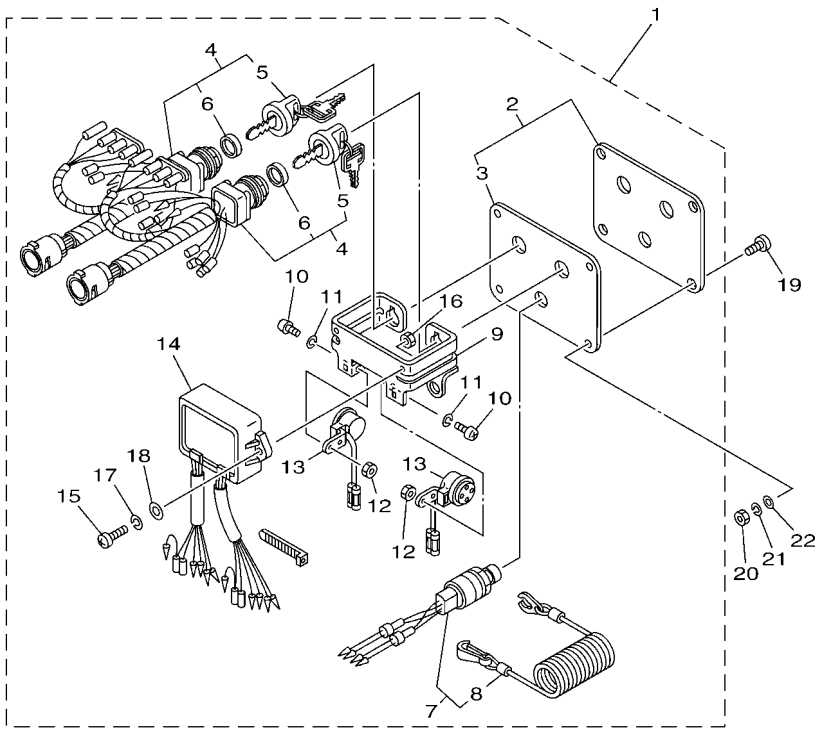

601R10R-K320

FIG. 29 SWITCH & PANEL 7

REF. NO.	PART NO.	DESCRIPTION	601R					REMARKS
1	61B–82570–06	PANEL SWITCH ASSY	1					WITHOUT CHOKE SW.
2	6K1–82571–02	.PLATE, PANEL SWITCH	1					
3	61B–82588–01	..PLATE	1					
4	61B–82510–02	.MAIN SWITCH ASSY	2					
5	676–82577–01	..CAP, KEY	1					
6	703–82532–00	..CAP	1					
7	6K1–82575–01	.ENGINE STOP SWITCH ASSY	1					
8	682–82556–00	..LANYARD, STOP SWITCH	1					
9	6K1–83614–01	.BRACKET	1					
10	98980–05010	.SCREW, BIND	2					
11	92990–05100	.WASHER, SPRING	2					
12	95380–05600	.NUT	2					
13	6R5–83383–00	.BUZZER	2					
14	61B–85830–01	.CONTROL UNIT ASSY	1					
15	98980–06020	.SCREW, BIND	2					
16	95380–06600	.NUT, HEXAGON	2					
17	92990–06100	.WASHER, SPRING	2					
18	92990–06600	.WASHER, PLATE	2					
19	90149–05M05	SCREW	4					
20	95380–05600	NUT	4					
21	92990–05100	WASHER, SPRING	4					
22	92990–05600	WASHER, PLATE	4					

FIG. 30 SWITCH & PANEL 8

TWIN IG SWITCH
(FOR DIGITAL NETWORK SYSTEM-6Y8)

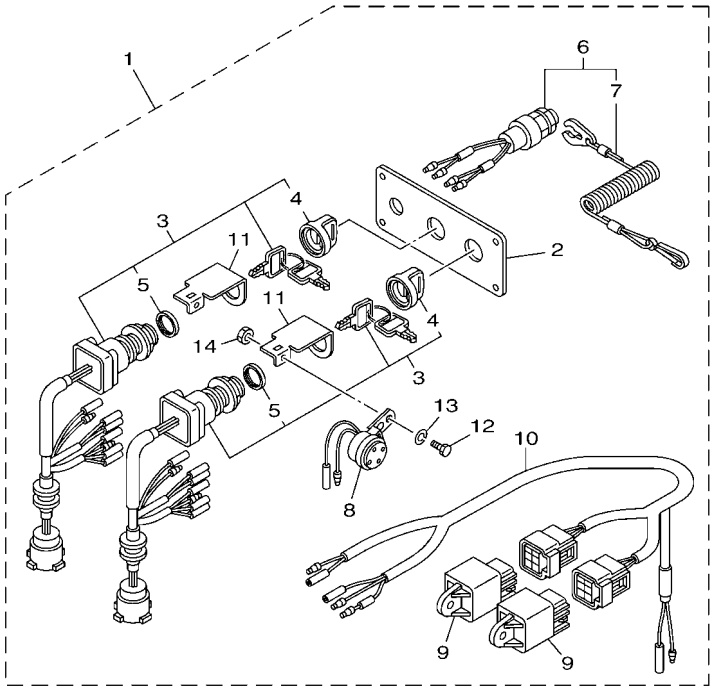

601R10R-M330

REF. NO.	PART NO.	DESCRIPTION	601R					REMARKS
1	6Y8–82570–04	PANEL SWITCH ASSY	1					1 & 2 STATION MAIN
2	6Y8–82571–01	.PLATE, PANEL SWITCH	1					
3	6Y8–82510–03	.MAIN SWITCH ASSY	2					
4	676–82577–01	..CAP, KEY	1					
5	703–82532–00	..CAP	1					
6	6K1–82575–01	.ENGINE STOP SWITCH ASSY	1					
7	682–82556–00	..LANYARD, STOP SWITCH	1					
8	6R5–83383–00	.BUZZER	2					
9	68V–81950–00	.RELAY ASSY	2					
10	6Y8–82507–00	.LEAD, IGNITION SWITCH RELAY	1					
11	64D–82581–00	.STAY, CORD CLAMP	2					
12	97003–05012	.BOLT	2					
13	92903–05100	.WASHER, SPRING	2					
14	95303–05700	.NUT	2					

DIGITAL NETWORK SYSTEM-6Y9
(TWIN : 1 & 2 STATION-MAIN)

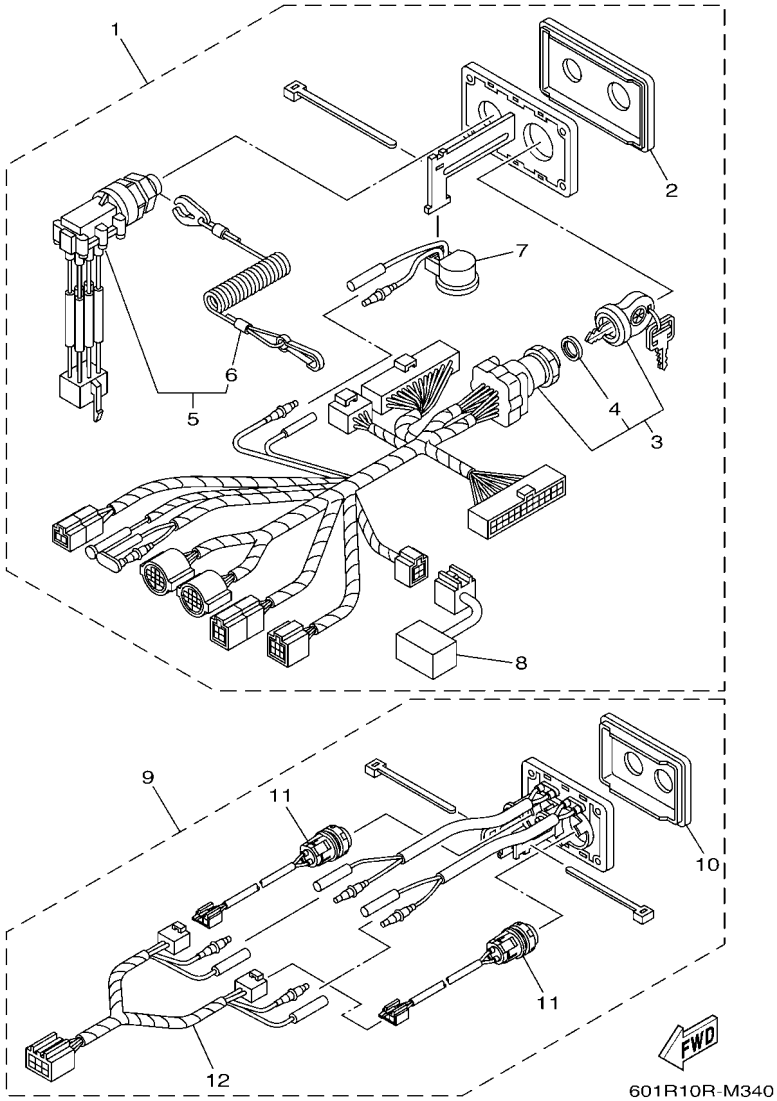

FIG. 31 SWITCH & PANEL 9

REF. NO.	PART NO.	DESCRIPTION	601R					REMARKS
1	6X6–82570–40	PANEL SWITCH ASSY	1					1 & 2 STATION MAIN
2	6X6–82571–10	.PANEL, SWITCH	1					
3	6X6–82510–10	.MAIN SWITCH ASSY	1					
4	703–82532–00	..CAP	1					
5	6X6–82575–10	.ENGINE STOP SWITCH ASSY	1					
6	682–82556–00	..LANYARD, STOP SWITCH	1					
7	703–83383–A0	.BUZZER	1					
8	6X6–81980–00	.DIODE ASSY	1					
9	6X6–82570–60	PANEL SWITCH ASSY	1					1 & 2 STATION MAIN
10	6X6–82571–20	.PANEL, SWITCH	1					
11	6X6–8259E–20	.SWITCH ASSY	2					
12	6X6–82716–00	.CORD SWITCH	1					

DIGITAL NETWORK SYSTEM-6Y9
(TWIN : 2 STATION-SUB)

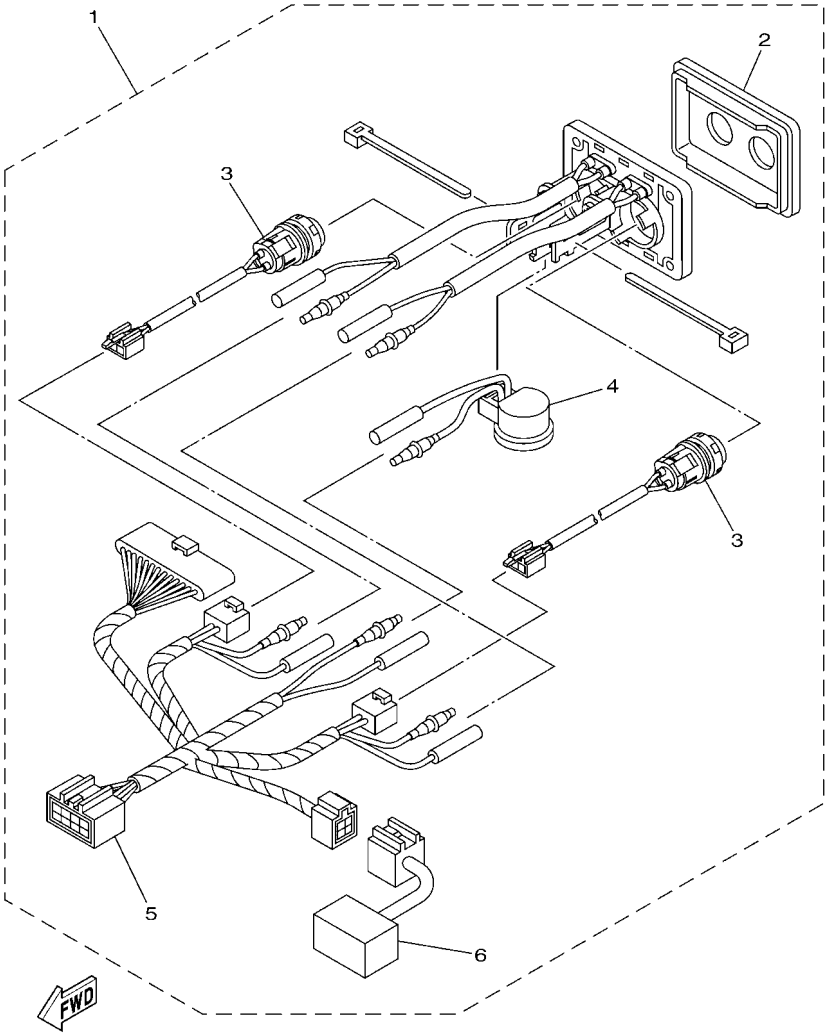

601R10R-K350

FIG. 32 SWITCH & PANEL 10

REF. NO.	PART NO.	DESCRIPTION	601R					REMARKS
1	6X6–82570–E0	PANEL SWITCH ASSY	1					2 STATION SUB
2	6X6–82571–20	.PANEL, SWITCH	1					
3	6X6–8259E–20	.SWITCH ASSY	2					
4	703–83383–A0	.BUZZER	1					
5	6X6–82716–40	.CORD SWITCH	1					
6	6X6–81980–00	.DIODE ASSY	1					

TRIPLE IG SWITCH
(FOR DIGITAL NETWORK SYSTEM-6Y8)

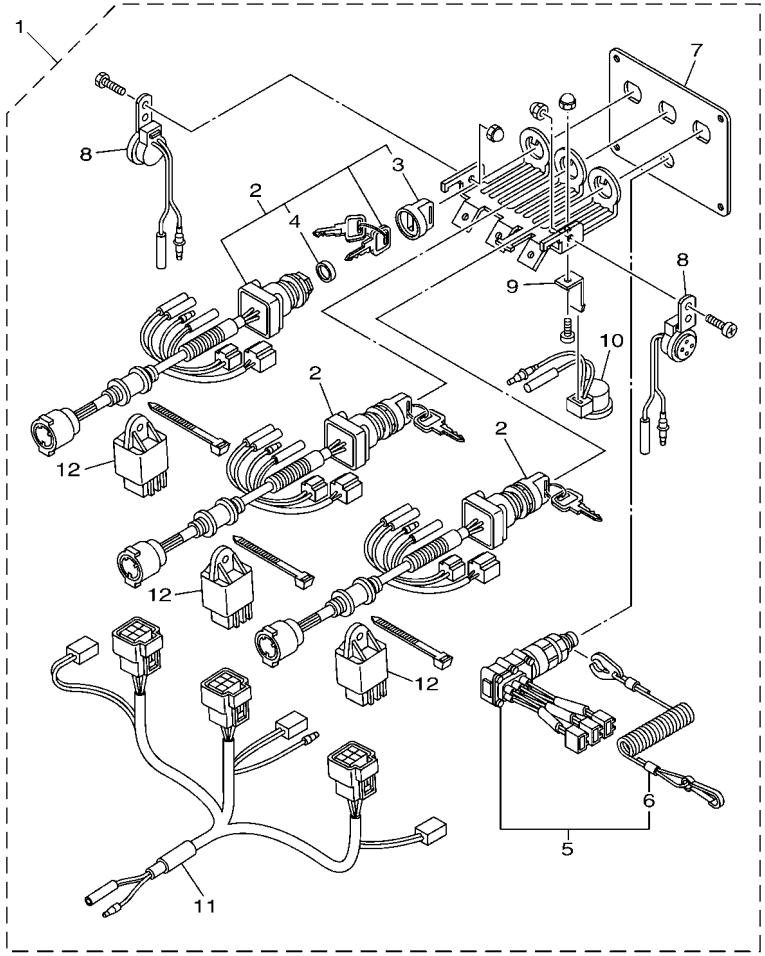

601R10R-K360

FIG. 33 SWITCH & PANEL 11

REF. NO.	PART NO.	DESCRIPTION	601R					REMARKS
1	6X5–82570–02	PANEL SWITCH ASSY	1					1 & 2 STATION MAIN
2	6X5–82510–02	.MAIN SWITCH ASSY	3					
3	676–82577–01	..CAP, KEY	1					
4	703–82532–00	..CAP	1					
5	6X5–82575–00	.ENGINE STOP SWITCH ASSY	1					
6	682–82556–00	..LANYARD, STOP SWITCH	1					
7	6X5–82571–00	.PANEL, SWITCH	1					
8	6X5–83383–00	.BUZZER	2					
9	6X5–82581–00	.STAY, CORD CLAMP	1					
10	6X4–83383–00	.BUZZER	1					
11	6X5–82507–00	.WIRE, LEAD	1					
12	68V–81950–00	.RELAY ASSY	3					

DIGITAL NETWORK SYSTEM-6Y9
(TRIPLE :1 & 2 STATION-MAIN)

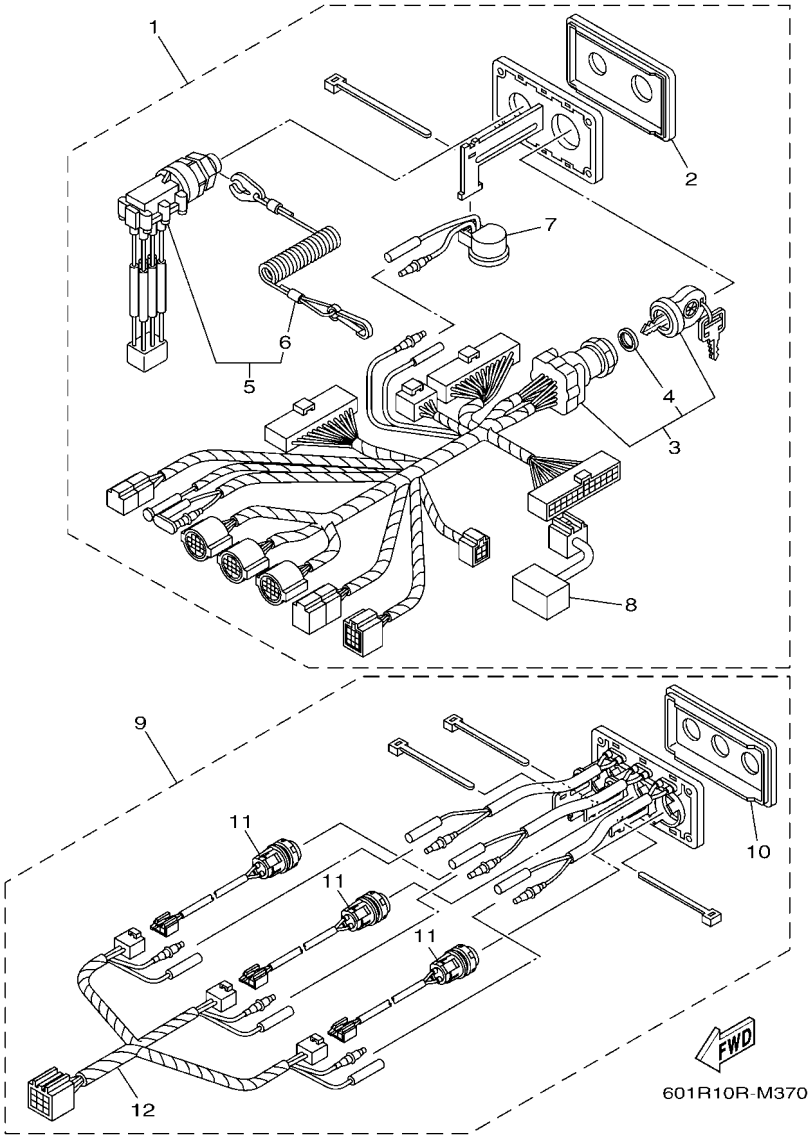

FIG. 34 SWITCH & PANEL 12

REF. NO.	PART NO.	DESCRIPTION	601R					REMARKS
1	6X6–82570–50	PANEL SWITCH ASSY	1					1 & 2 STATION MAIN
2	6X6–82571–10	.PANEL, SWITCH	1					
3	6X6–82510–20	.MAIN SWITCH ASSY	1					
4	703–82532–00	..CAP	1					
5	6X6–82575–10	.ENGINE STOP SWITCH ASSY	1					
6	682–82556–00	..LANYARD, STOP SWITCH	1					
7	703–83383–A0	.BUZZER	1					
8	6X6–81980–00	.DIODE ASSY	1					
9	6X6–82570–70	PANEL SWITCH ASSY	1					1 & 2 STATION MAIN
10	6X6–82571–30	.PANEL, SWITCH	1					
11	6X6–8259E–20	.SWITCH ASSY	3					
12	6X6–82716–10	.CORD SWITCH	1					

DIGITAL NETWORK SYSTEM-6Y9
(TRIPLE : 2 STATION-SUB)

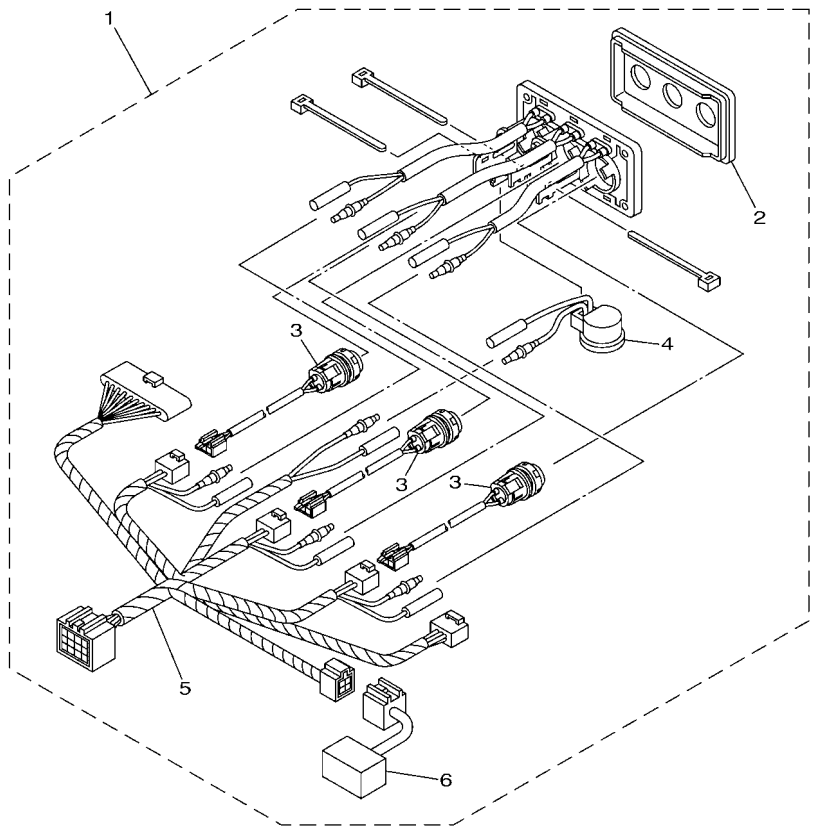

601R10R-K380

FIG. 35 SWITCH & PANEL 13

REF. NO.	PART NO.	DESCRIPTION	601R					REMARKS
1	6X6–82570–F0	PANEL SWITCH ASSY	1					2 STATION SUB
2	6X6–82571–30	.PANEL, SWITCH	1					
3	6X6–8259E–20	.SWITCH ASSY	3					
4	703–83383–A0	.BUZZER	1					
5	6X6–82716–50	.CORD SWITCH	1					
6	6X6–81980–00	.DIODE ASSY	1					

DIGITAL NETWORK SYSTEM-6Y9
(SINGLE / TWIN / TRIPLE-2 STATION)

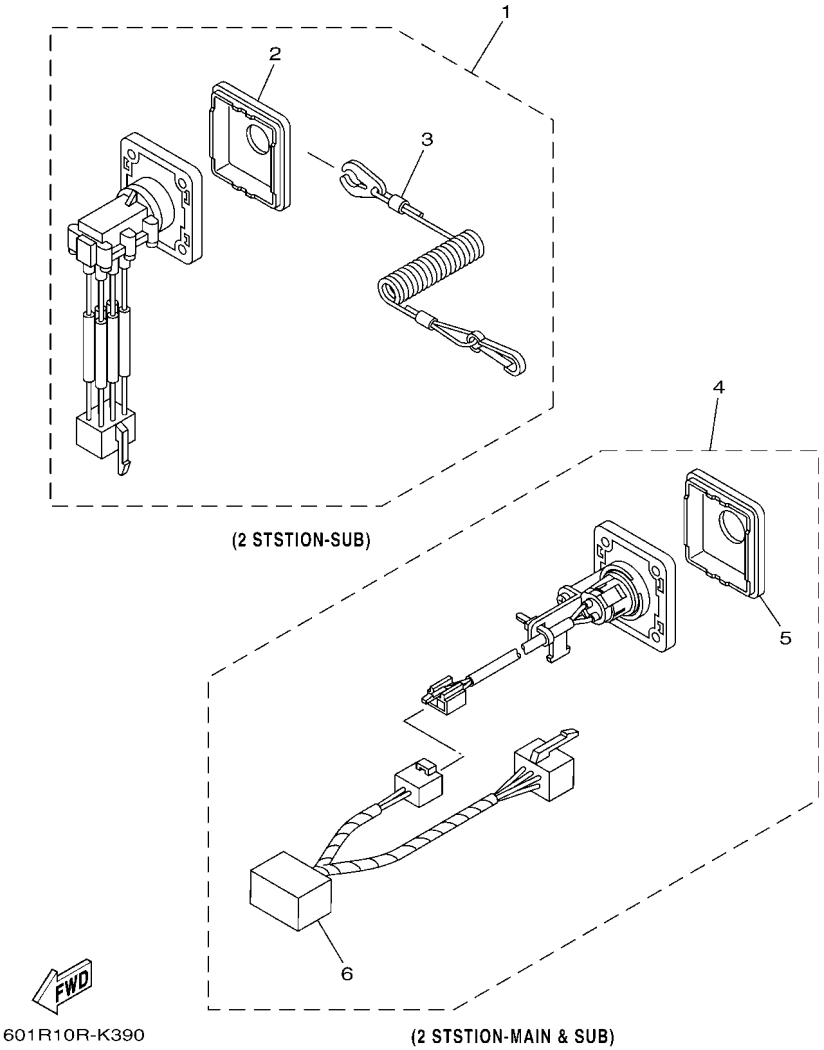

FIG. 36 SWITCH & PANEL 14

REF. NO.	PART NO.	DESCRIPTION	601R					REMARKS
1	6X6–82570–90	PANEL SWITCH ASSY	1					2 STATION SUB
2	6X6–82571–50	.PANEL, SWITCH	1					
3	682–82556–00	.LANYARD, STOP SWITCH	1					
4	6X6–82570–B0	PANEL SWITCH ASSY	2					2 STATION MAIN & SUB
5	6X6–82571–70	.PANEL, SWITCH	1					
6	6X6–81980–10	.DIODE ASSY	1					

FIG. 37 SWITCH & PANEL 15

DIGITAL NETWORK SYSTEM-6Y9
(QUAD : 1 & 2 STATION-MAIN)

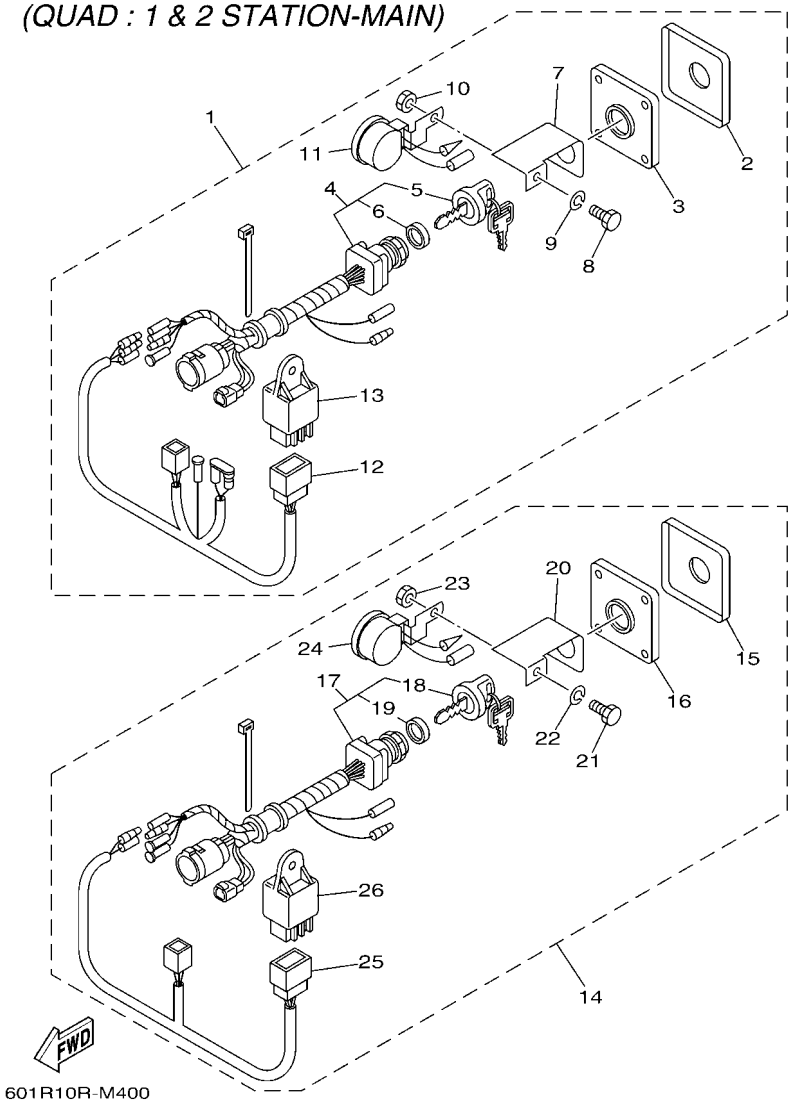

REF. NO.	PART NO.	DESCRIPTION	601R					REMARKS
1	6X6–82570–R2	PANEL SWITCH ASSY (FOR PORT)	1					1 & 2 STATION MAIN
2	64D–82571–00	.PANEL, SWITCH	1					
3	64D–82588–00	.PLATE	1					
4	6X6–82510–30	.MAIN SWITCH ASSY	1					
5	676–82577–01	..CAP, KEY	1					
6	703–82532–00	..CAP	1					
7	64D–82581–00	.STAY, CORD CLAMP	1					
8	97095–05012	.BOLT	1					
9	92903–05100	.WASHER, SPRING	1					
10	95303–05700	.NUT	1					
11	688–83383–12	.BUZZER	1					
12	6X6–82507–00	.WIRE, LEAD	1					
13	68V–81950–00	.RELAY ASSY	1					
14	6X6–82570–S2	PANEL SWITCH ASSY (FOR C-PORT)	1					1 & 2 STATION MAIN
15	64D–82571–00	.PANEL, SWITCH	1					
16	64D–82588–00	.PLATE	1					
17	6X6–82510–30	.MAIN SWITCH ASSY	1					
18	676–82577–01	..CAP, KEY	1					
19	703–82532–00	..CAP	1					
20	64D–82581–00	.STAY, CORD CLAMP	1					
21	97095–05012	.BOLT	1					
22	92903–05100	.WASHER, SPRING	1					
23	95303–05700	.NUT	1					
24	688–83383–12	.BUZZER	1					
25	6X6–82507–10	.WIRE, LEAD	1					
26	68V–81950–00	.RELAY ASSY	1					

DIGITAL NETWORK SYSTEM-6Y9
(QUAD : 1 & 2 STATION-MAIN)

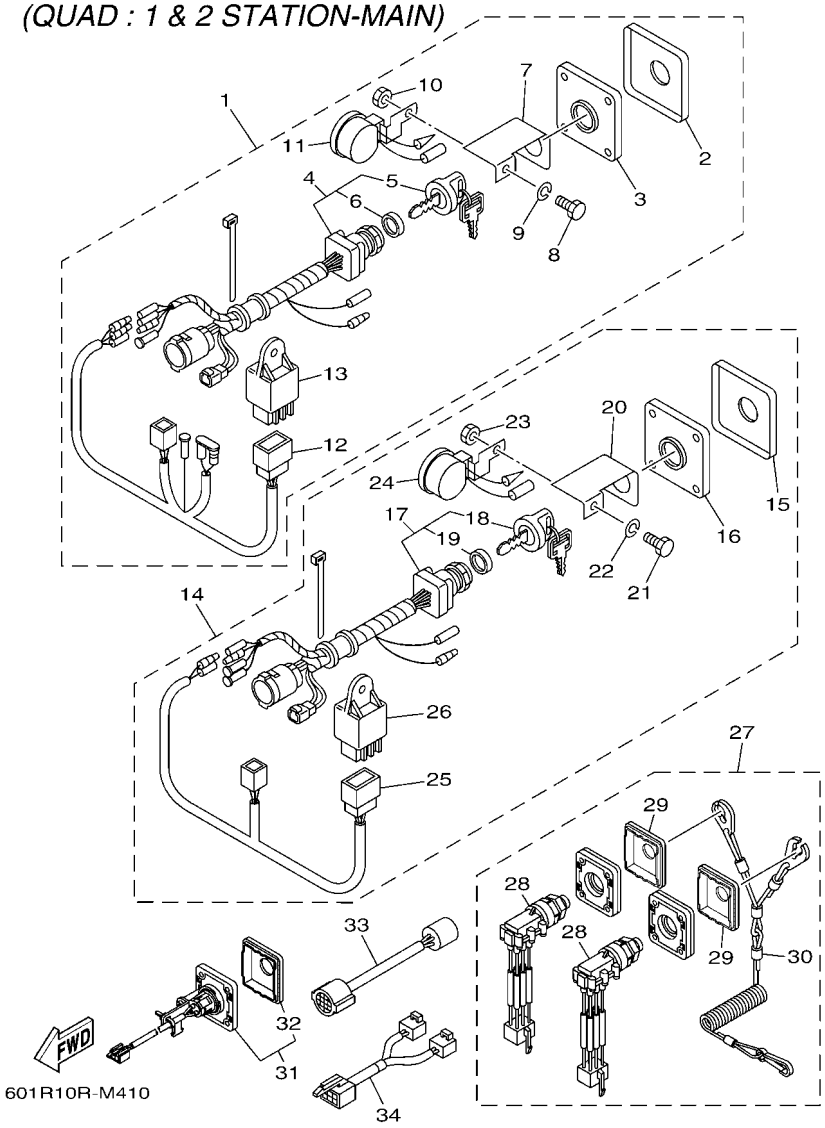

FIG. 38 SWITCH & PANEL 16

REF. NO.	PART NO.	DESCRIPTION	601R					REMARKS
1	6X6–82570–T2	PANEL SWITCH ASSY (FOR C-STBD)	1					1 & 2 STATION MAIN
2	64D–82571–00	.PANEL, SWITCH	1					
3	64D–82588–00	.PLATE	1					
4	6X6–82510–30	.MAIN SWITCH ASSY	1					
5	676–82577–01	..CAP, KEY	1					
6	703–82532–00	..CAP	1					
7	64D–82581–00	.STAY, CORD CLAMP	1					
8	97095–05012	.BOLT	1					
9	92903–05100	.WASHER, SPRING	1					
10	95303–05700	.NUT	1					
11	688–83383–12	.BUZZER	1					
12	6X6–82507–20	.WIRE, LEAD	1					
13	68V–81950–00	.RELAY ASSY	1					
14	6X6–82570–U2	PANEL SWITCH ASSY (FOR STBD)	1					1 & 2 STATION MAIN
15	64D–82571–00	.PANEL, SWITCH	1					
16	64D–82588–00	.PLATE	1					
17	6X6–82510–30	.MAIN SWITCH ASSY	1					
18	676–82577–01	..CAP, KEY	1					
19	703–82532–00	..CAP	1					
20	64D–82581–00	.STAY, CORD CLAMP	1					
21	97095–05012	.BOLT	1					
22	92903–05100	.WASHER, SPRING	1					
23	95303–05700	.NUT	1					
24	688–83383–12	.BUZZER	1					
25	6X6–82507–30	.WIRE, LEAD	1					
26	68V–81950–00	.RELAY ASSY	1					
27	6X6–82570–V0	PANEL SWITCH ASSY	1					2 STATION MAIN & SUB

FIG. 38 SWITCH & PANEL 16

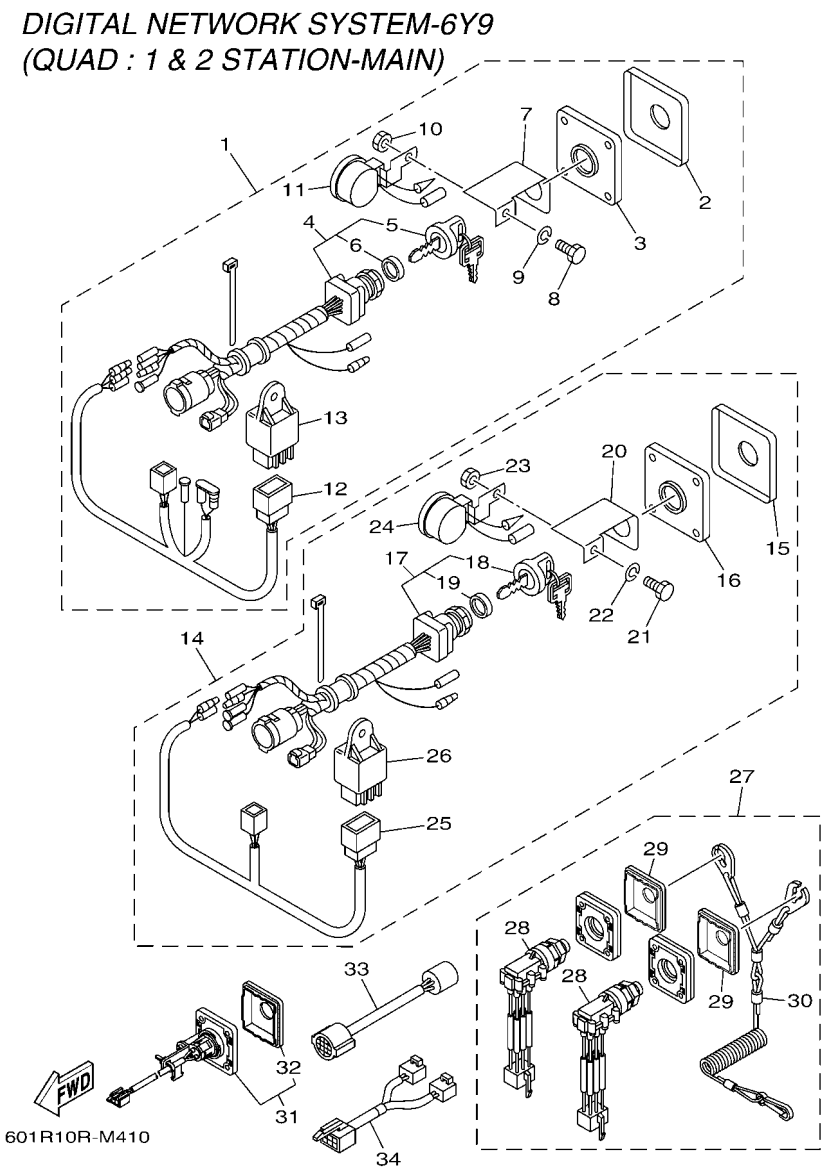

REF. NO.	PART NO.	DESCRIPTION	601R					REMARKS
28	6X6–82575–30	.ENGINE STOP SWITCH ASSY	2					
29	6X6–82571–50	.PANEL, SWITCH	2					
30	6X6–82556–00	.LANYARD, STOP SWITCH	1					
31	6X6–82570–L0	PANEL SWITCH ASSY	1					2 STATION MAIN & SUB
32	6X6–82571–70	.PANEL, SWITCH	1					
33	6X6–8258A–L0	EXTENSION, WIRE HARNESS	4					
34	6X6–8258A–U0	EXTENSION, WIRE HARNESS	2					

DIGITAL NETWORK SYSTEM-6Y9
(QUAD : 2 STATION-SUB)

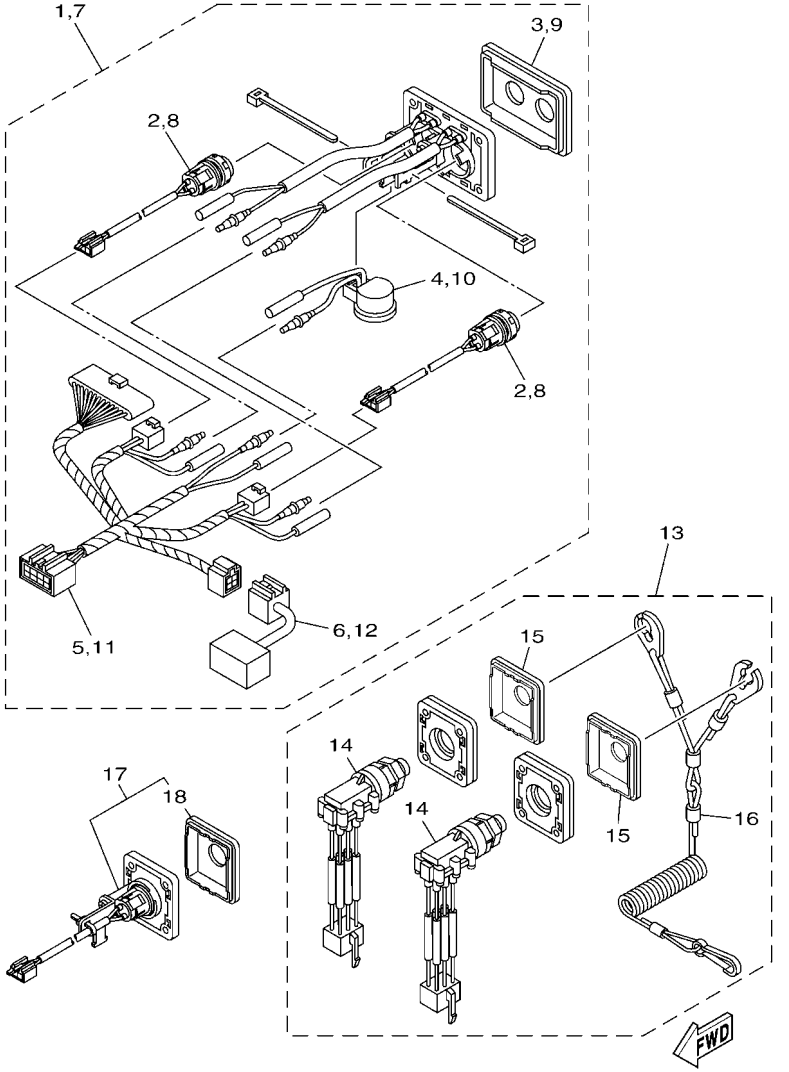

FIG. 39 SWITCH & PANEL 17

REF. NO.	PART NO.	DESCRIPTION	601R					REMARKS
1	6X6–82570–J0	PANEL SWITCH ASSY (PORT-P/CP)	1					2 STATION SUB
2	6X6–8259E–20	.SWITCH ASSY	2					
3	6X6–82571–80	.PANEL, SWITCH	1					
4	703–83383–A0	.BUZZER	1					
5	6X6–82716–40	.CORD SWITCH	1					
6	6X6–81980–00	.DIODE ASSY	1					
7	6X6–82570–K0	PANEL SWITCH ASSY (STBD-CS/S)	1					2 STATION SUB
8	6X6–8259E–20	.SWITCH ASSY	2					
9	6X6–82571–90	.PANEL, SWITCH	1					
10	703–83383–A0	.BUZZER	1					
11	6X6–82716–40	.CORD SWITCH	1					
12	6X6–81980–00	.DIODE ASSY	1					
13	6X6–82570–V0	PANEL SWITCH ASSY	1					2 STATION MAIN & SUB
14	6X6–82575–30	.ENGINE STOP SWITCH ASSY	2					
15	6X6–82571–50	.PANEL, SWITCH	2					
16	6X6–82556–00	.LANYARD, STOP SWITCH	1					
17	6X6–82570–L0	PANEL SWITCH ASSY	1					2 STATION MAIN & SUB
18	6X6–82571–70	.PANEL, SWITCH	1					

IG SWITCH W/ PANEL

Part No.	Remarks
64D-82570-05	With bullet connectors for emergency stop switch
64D-82570-22	With 2-pin coupler for emergency stop switch, For 6X3 and 6X7 remote control

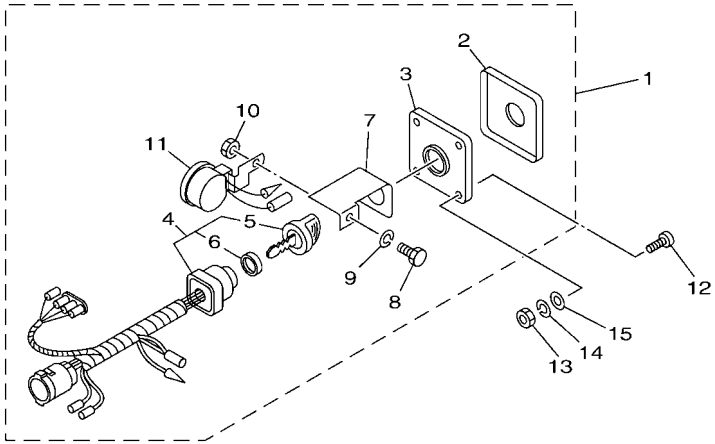

EMERGENCY STOP SWITCH W/ PANEL

Part No.	Remarks
64D-82570-11	With bullet connectors for stop switch
64D-82570-31	With 2-pin coupler for stop switch

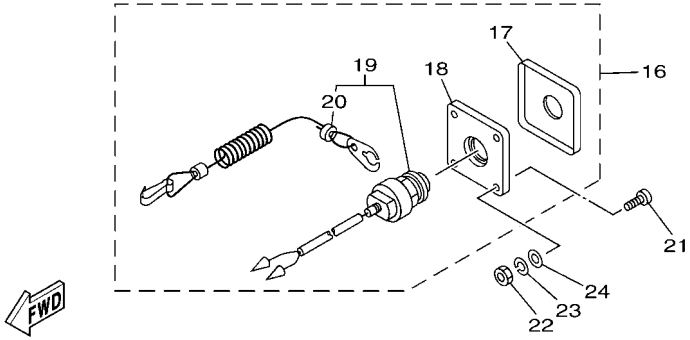

601R10R-Q400

FIG. 40 SWITCH & PANEL 18

REF. NO.	PART NO.	DESCRIPTION	601R					REMARKS
1	64D–82570–05	PANEL SWITCH ASSY	1					UR
	64D–82570–22	PANEL SWITCH ASSY	1					UR
2	64D–82571–00	.PANEL, SWITCH	1					
3	64D–82588–00	.PLATE	1					
4	64D–82510–04	.MAIN SWITCH ASSY	1					FOR 64D-82570-05
	64D–82510–21	.MAIN SWITCH ASSY	1					FOR 64D-82570-22
5	703–82577–00	..CAP, KEY	1					
6	6K1–82532–00	..CAP	1					
7	64D–82581–00	.STAY, CORD CLAMP	1					
8	97303–05012	.BOLT	1					
9	92903–05100	.WASHER, SPRING	1					
10	95303–05700	.NUT	1					
11	688–83383–12	.BUZZER	1					
12	90149–05M05	SCREW	4					
13	95380–05600	NUT	4					
14	92990–05100	WASHER, SPRING	4					
15	92990–05600	WASHER, PLATE	4					
16	64D–82570–11	PANEL SWITCH ASSY	1					UR
	64D–82570–31	PANEL SWITCH ASSY	1					UR
17	64D–82571–10	.PANEL, SWITCH	1					
18	64D–82588–10	.PLATE	1					
19	64D–82575–01	.ENGINE STOP SWITCH ASSY	1					FOR 64D-82570-11
	64D–82575–11	.ENGINE STOP SWITCH ASSY	1					FOR 64D-82570-31
20	682–82556–00	..LANYARD, STOP SWITCH	1					
21	90149–05M05	SCREW	4					
22	95380–05600	NUT	4					
23	92990–05100	WASHER, SPRING	4					

IG SWITCH W/ PANEL

Part No.	Remarks
64D-82570-05	With bullet connectors for emergency stop switch
64D-82570-22	With 2-pin coupler for emergency stop switch, For 6X3 and 6X7 remote control

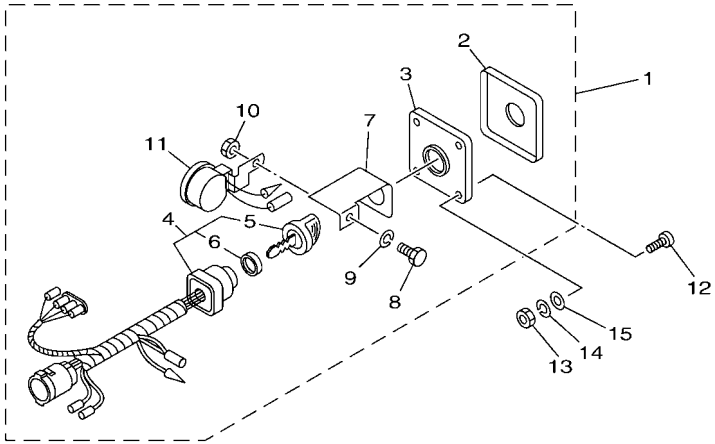

EMERGENCY STOP SWITCH W/ PANEL

Part No.	Remarks
64D-82570-11	With bullet connectors for stop switch
64D-82570-31	With 2-pin coupler for stop switch

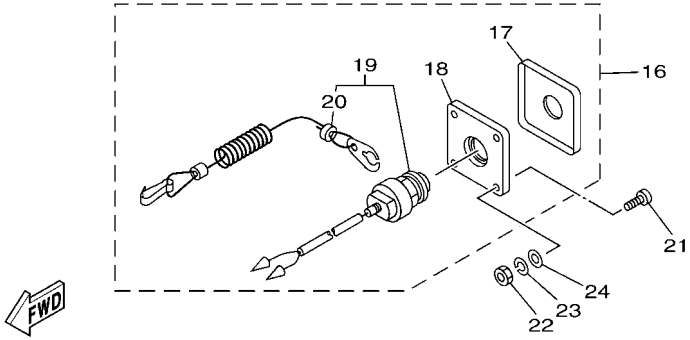

601R10R-Q400

FIG. 40 SWITCH & PANEL 18

REF. NO.	PART NO.	DESCRIPTION	601R					REMARKS
24	92990–05600	WASHER, PLATE	4					

IG SWITCH W/O PANEL

Ref. No.	Part No.	Remarks
1	704-82510-0A	With bullet connectors for stop switch
4	6X3-8257B-01	With 2-pin coupler for stop switch, For 6X3 and 6X7 remote control

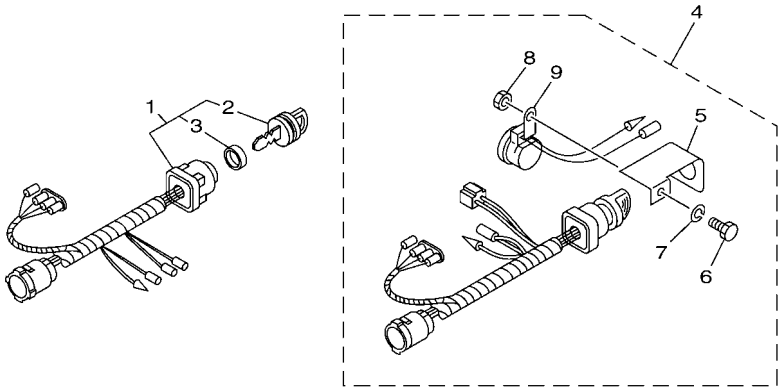

EMERGENCY STOP SWITCH W/O PANEL

Ref. No.	Part No.	Remarks
10	688-82575-12	With bullet connectors for stop switch
12	64D-82575-11	With 2-pin coupler for stop switch

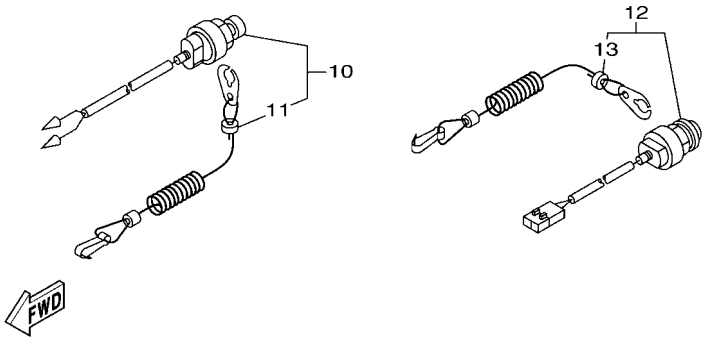

601R10R-Q410

FIG. 41 SWITCH & PANEL 19

REF. NO.	PART NO.	DESCRIPTION	601R					REMARKS
1	704–82510–0A	MAIN SWITCH ASSY	1					
2	703–82577–00	.CAP, KEY	1					
3	6K1–82532–00	.CAP	1					
4	6X3–8257B–01	PANEL SWITCH COMP.	1					
5	64D–82581–00	.STAY, CORD CLAMP	1					
6	97303–05012	.BOLT	1					
7	92903–05100	.WASHER, SPRING	1					
8	95303–05700	.NUT	1					
9	6R5–83383–00	.BUZZER	1					
10	688–82575–12	ENGINE STOP SWITCH ASSY	1					
11	682–82556–00	.LANYARD, STOP SWITCH	1					
12	64D–82575–11	ENGINE STOP SWITCH ASSY	1					
13	682–82556–00	.LANYARD, STOP SWITCH	1					

ADAPTER FOR EMERGENCY STOP SWITCH LEAD

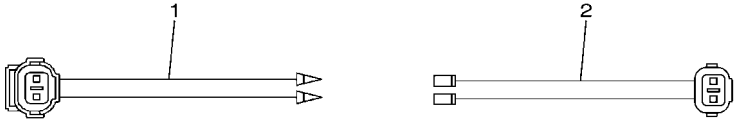

ENGINE SHUT-OFF LANYARD (CORD)

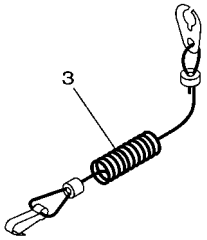

PT/T SWITCH PANEL
(FOR PTT MODELS)

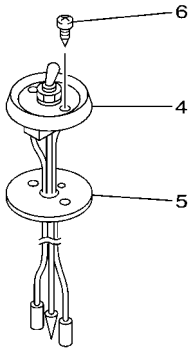

6011100-G330

FIG. 42 SWITCH & PANEL 20

REF. NO.	PART NO.	DESCRIPTION	601R					REMARKS
1	6X3–81971–00	WIRE, LEAD	1					
2	6X3–81971–10	WIRE, LEAD	1					
3	682–82556–00	LANYARD, STOP SWITCH	1					
4	688–82563–10	TRIM & TILT SWITCH ASSY	1					
5	688–82388–00	PLATE	1					
6	97780–40116	SCREW, TAPPING	2					

SWITCH PANEL HARNESS

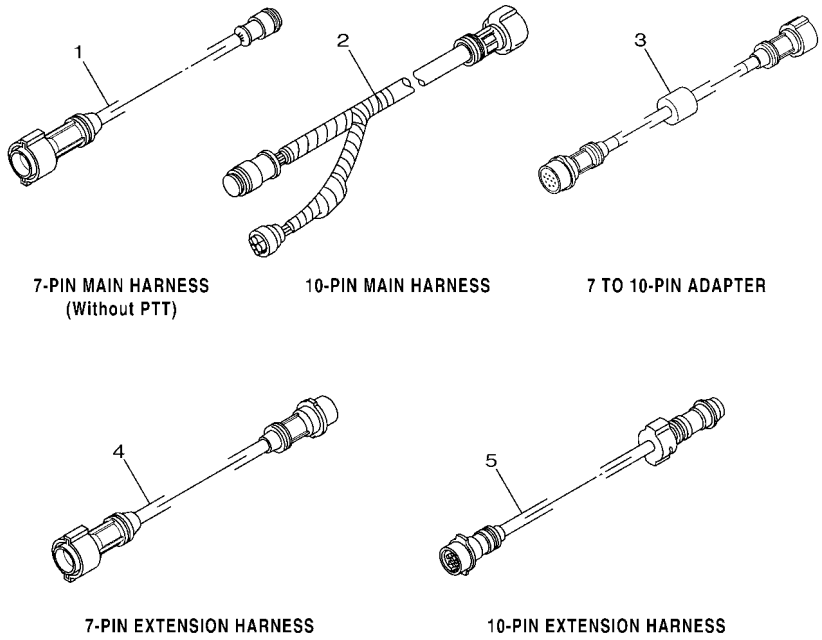

601R10R-P430

FIG. 43 WIRE HARNESS 1

REF. NO.	PART NO.	DESCRIPTION	601R					REMARKS
1	688–82586–50	EXTENSION, WIRE HARNESS (5M)	1					(7P)
2	688–8258A–50	EXTENSION, WIRE HARNESS (5M)	1					UR (10P)
	688–8258A–60	EXTENSION, WIRE HARNESS (6M)	1					UR (10P)
	688–8258A–70	EXTENSION, WIRE HARNESS (7M)	1					UR (10P)
	61B–8258A–01	EXTENSION, WIRE HARNESS (9.5M)	1					UR (10P)
	6K1–8258A–40	EXTENSION, WIRE HARNESS (8M)	1					UR (10P)
3	703–8258A–00	EXTENSION, WIRE HARNESS (0.5M)	1					7P TO 10P ADAPTER
4	688–82586–11	EXTENSION, WIRE HARNESS (2.0M)	1					UR L:2M(7P)
	688–82586–31	EXTENSION, WIRE HARNESS (3.0M)	1					UR L:3M(7P)
5	688–8258A–10	EXTENSION, WIRE HARNESS (2M)	1					UR (10P)
	688–8258A–30	EXTENSION, WIRE HARNESS (3M)	1					UR (10P)

DIGITAL ELECTRONIC REMOTE CONTROL WIRE HARNESS

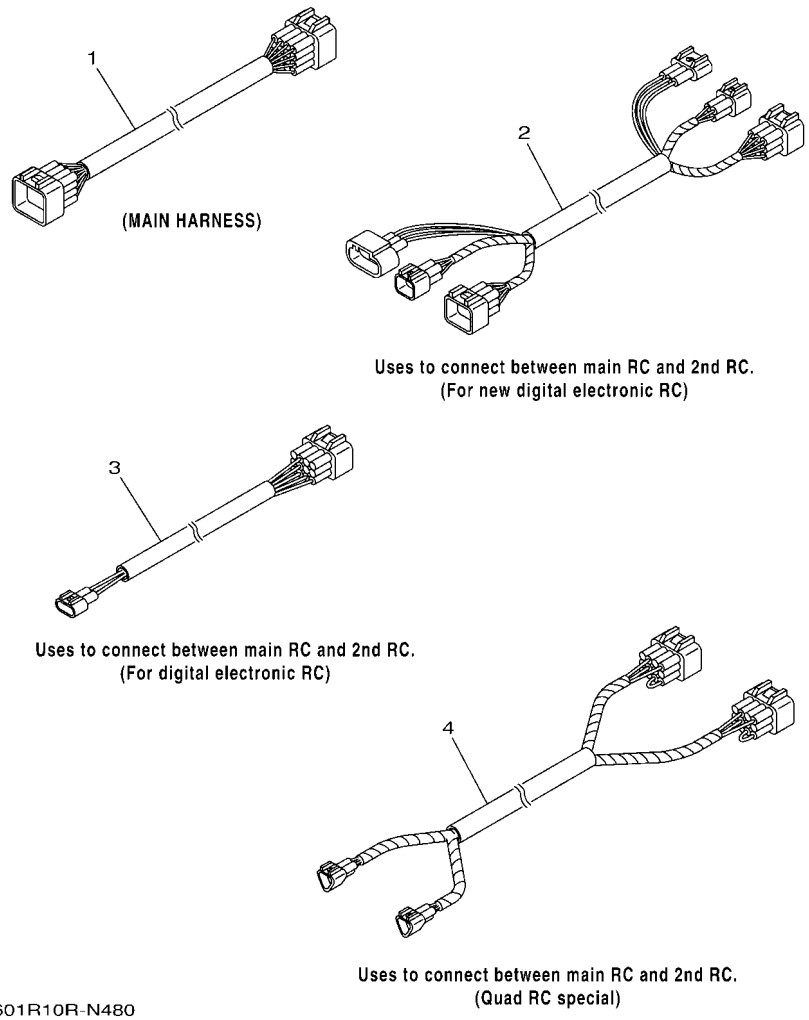

601R10R-N480

FIG. 44 WIRE HARNESS 2

REF. NO.	PART NO.	DESCRIPTION	601R					REMARKS
1	6X6–8258A–00	EXTENSION, WIRE HARNESS (6.1M)	1					UR FOR SINGLE
	6X6–8258A–00	EXTENSION, WIRE HARNESS (6.1M)	2					UR FOR TWIN
	6X6–8258A–00	EXTENSION, WIRE HARNESS (6.1M)	3					UR FOR TRIPLE
	6X6–8258A–00	EXTENSION, WIRE HARNESS (6.1M)	4					UR FOR QUAD
	6X6–8258A–10	EXTENSION, WIRE HARNESS (7M)	1					UR FOR SINGLE
	6X6–8258A–10	EXTENSION, WIRE HARNESS (7M)	2					UR FOR TWIN
	6X6–8258A–10	EXTENSION, WIRE HARNESS (7M)	3					UR FOR TRIPLE
	6X6–8258A–10	EXTENSION, WIRE HARNESS (7M)	4					UR FOR QUAD
	6X6–8258A–20	EXTENSION, WIRE HARNESS (8M)	1					UR FOR SINGLE
	6X6–8258A–20	EXTENSION, WIRE HARNESS (8M)	2					UR FOR TWIN
	6X6–8258A–20	EXTENSION, WIRE HARNESS (8M)	3					UR FOR TRIPLE
	6X6–8258A–20	EXTENSION, WIRE HARNESS (8M)	4					UR FOR QUAD
	6X6–8258A–30	EXTENSION, WIRE HARNESS (10M)	1					UR FOR SINGLE
	6X6–8258A–30	EXTENSION, WIRE HARNESS (10M)	2					UR FOR TWIN
	6X6–8258A–30	EXTENSION, WIRE HARNESS (10M)	3					UR FOR TRIPLE
	6X6–8258A–30	EXTENSION, WIRE HARNESS (10M)	4					UR FOR QUAD
	6X6–8258A–40	EXTENSION, WIRE HARNESS (12M)	1					UR FOR SINGLE
	6X6–8258A–40	EXTENSION, WIRE HARNESS (12M)	2					UR FOR TWIN
	6X6–8258A–40	EXTENSION, WIRE HARNESS (12M)	3					UR FOR TRIPLE
	6X6–8258A–40	EXTENSION, WIRE HARNESS (12M)	4					UR FOR QUAD
	6X6–8258A–50	EXTENSION, WIRE HARNESS (3.7M)	1					UR FOR SINGLE
	6X6–8258A–50	EXTENSION, WIRE HARNESS (3.7M)	2					UR FOR TWIN
	6X6–8258A–50	EXTENSION, WIRE HARNESS (3.7M)	3					UR FOR TRIPLE
	6X6–8258A–50	EXTENSION, WIRE HARNESS (3.7M)	4					UR FOR QUAD
	6X6–8258A–60	EXTENSION, WIRE HARNESS (5.2M)	1					UR FOR SINGLE
	6X6–8258A–60	EXTENSION, WIRE HARNESS (5.2M)	2					UR FOR TWIN
	6X6–8258A–60	EXTENSION, WIRE HARNESS (5.2M)	3					UR FOR TRIPLE

FIG. 44 WIRE HARNESS 2

DIGITAL ELECTRONIC
REMOTE CONTROL WIRE HARNESS

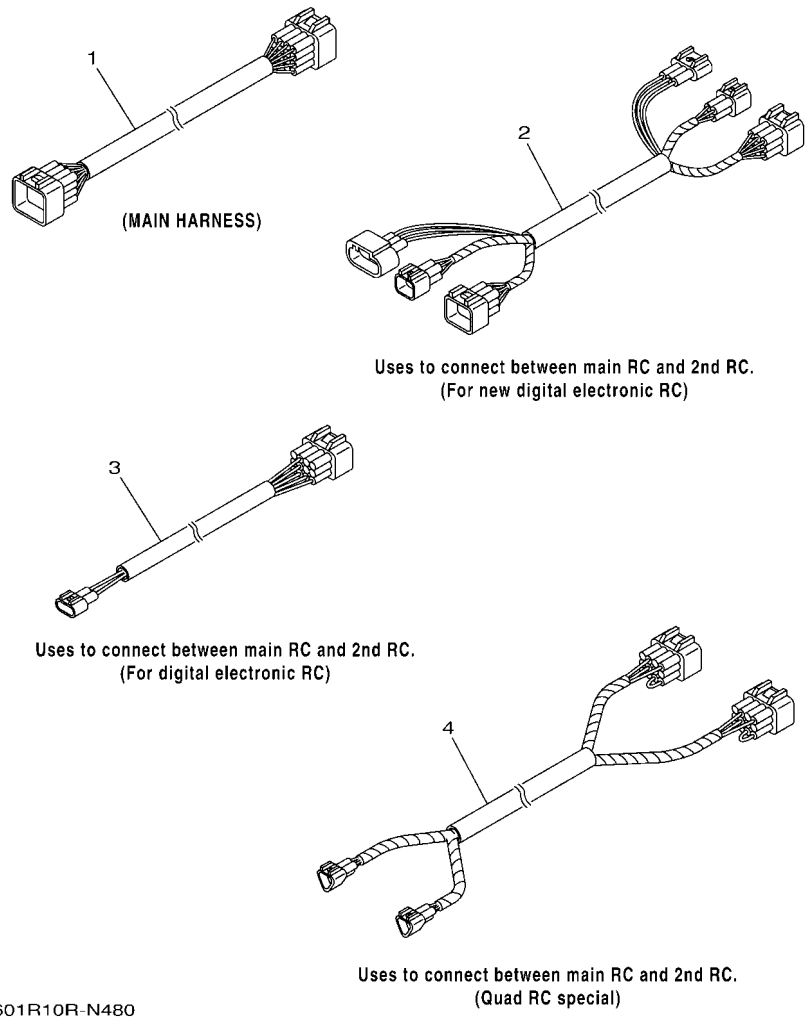

601R10R-N480

REF. NO.	PART NO.	DESCRIPTION	601R					REMARKS
1	6X6–8258A–60	EXTENSION, WIRE HARNESS (5.2M)	4					UR FOR QUAD
2	6X6–8258A–G1	EXTENSION, WIRE HARNESS (5M)	1					UR FOR SINGLE
	6X6–8258A–G1	EXTENSION, WIRE HARNESS (5M)	2					UR FOR TWIN
	6X6–8258A–G1	EXTENSION, WIRE HARNESS (5M)	3					UR FOR TRIPLE
	6X6–8258A–G1	EXTENSION, WIRE HARNESS (5M)	4					UR FOR QUAD
	6X6–8258A–H1	EXTENSION, WIRE HARNESS (8M)	1					UR FOR SINGLE
	6X6–8258A–H1	EXTENSION, WIRE HARNESS (8M)	2					UR FOR TWIN
	6X6–8258A–H1	EXTENSION, WIRE HARNESS (8M)	3					UR FOR TRIPLE
	6X6–8258A–H1	EXTENSION, WIRE HARNESS (8M)	4					UR FOR QUAD
	6X6–8258A–J1	EXTENSION, WIRE HARNESS: 12.2M	1					UR FOR SINGLE
	6X6–8258A–J1	EXTENSION, WIRE HARNESS: 12.2M	2					UR FOR TWIN
	6X6–8258A–J1	EXTENSION, WIRE HARNESS: 12.2M	3					UR FOR TRIPLE
	6X6–8258A–J1	EXTENSION, WIRE HARNESS: 12.2M	4					UR FOR QUAD
3	6X6–8258A–B1	EXTENSION, WIRE HARNESS (5M)	1					UR FOR SINGLE
	6X6–8258A–B1	EXTENSION, WIRE HARNESS (5M)	2					UR FOR TWIN,QUAD
	6X6–8258A–B1	EXTENSION, WIRE HARNESS (5M)	3					UR FOR TRIPLE
	6X6–8258A–D1	EXTENSION, WIRE HARNESS (8M)	1					UR FOR SINGLE
	6X6–8258A–D1	EXTENSION, WIRE HARNESS (8M)	2					UR FOR TWIN,QUAD
	6X6–8258A–D1	EXTENSION, WIRE HARNESS (8M)	3					UR FOR TRIPLE
	6X6–8258A–F1	EXTENSION, WIRE HARNESS: 12.2M	1					UR FOR SINGLE
	6X6–8258A–F1	EXTENSION, WIRE HARNESS: 12.2M	2					UR FOR TWIN,QUAD
	6X6–8258A–F1	EXTENSION, WIRE HARNESS: 12.2M	3					UR FOR TRIPLE
4	6X6–8258A–R0	EXTENSION, WIRE HARNESS (5M)	1					UR FOR QUAD
	6X6–8258A–S0	EXTENSION, WIRE HARNESS (8M)	1					UR FOR QUAD
	6X6–8258A–T0	EXTENSION, WIRE HARNESS: 12.2M	1					UR FOR QUAD

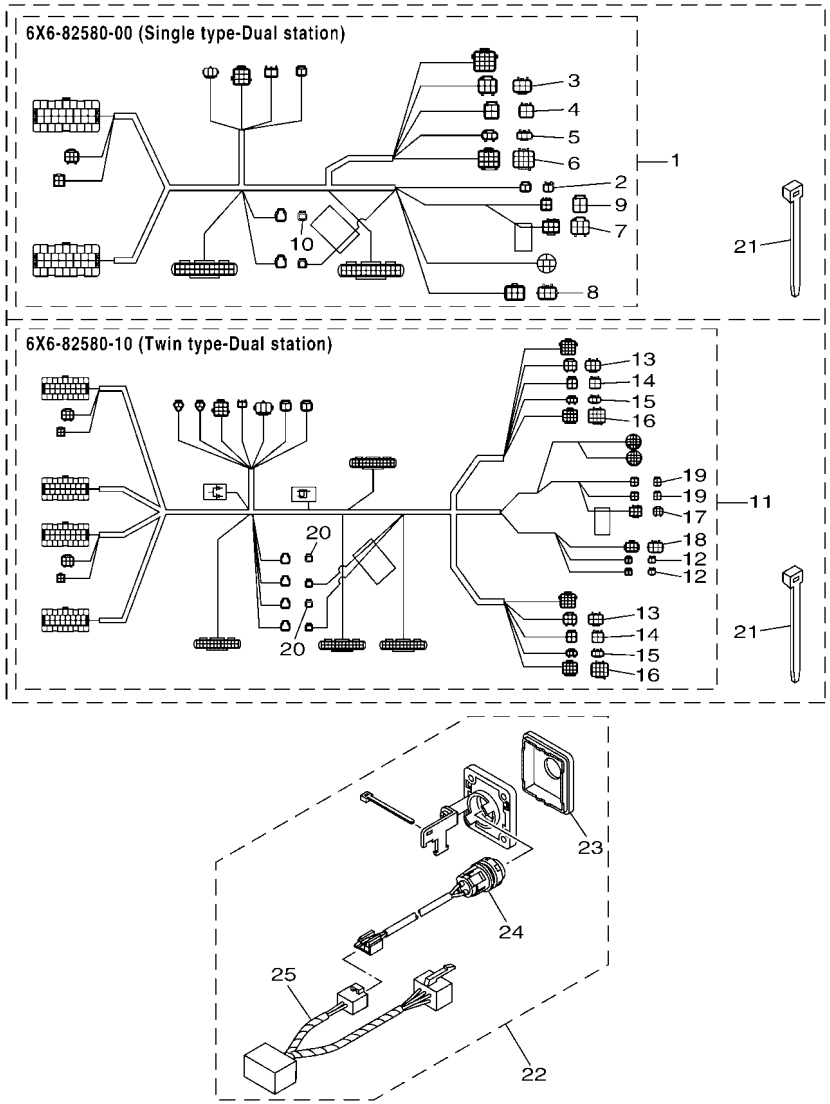

FIG. 45 ELECTRICAL DBW REMO-CON 1

REF. NO.	PART NO.	DESCRIPTION	601R					REMARKS
1	6X6–82580–00	WIRE HARNESS ASSY 2	1					AP SINGLE
2	6X6–82585–20	.CAP 2 (2P)	1					
3	6X6–82582–60	.CAP 1 (6P)	1					
4	6X6–82582–40	.CAP 1 (4P)	1					
5	6X6–82582–A0	.CAP 1 (3P)	1					
6	6X6–82582–C0	.CAP 1 (12P)	1					
7	6X6–82585–60	.CAP 2 (6P)	1					
8	6X6–8257Y–70	.CAP 2 (6P)	1					
9	6Y8–82582–11	.CAP 1 (4PIN)	1					
10	6X6–82585–00	.CAP 2	1					
11	6X6–82580–10	WIRE HARNESS ASSY 2	1					AP TWIN
12	6X6–82585–20	.CAP 2 (2P)	2					
13	6X6–82582–60	.CAP 1 (6P)	2					
14	6X6–82582–40	.CAP 1 (4P)	2					
15	6X6–82582–A0	.CAP 1 (3P)	2					
16	6X6–82582–C0	.CAP 1 (12P)	2					
17	6X6–82585–70	.CAP 2 (6P)	1					
18	6X6–8257Y–70	.CAP 2 (6P)	1					
19	6Y8–82582–11	.CAP 1 (4PIN)	2					
20	6X6–82585–00	.CAP 2	2					
21	703–82591–00	BAND	6					AP SINGLE
	703–82591–00	BAND	8					AP TWIN
22	6X6–82570–C0	PANEL SWITCH ASSY	1					AP TWIN,TRIPLE
23	6X6–82571–60	.PANEL, SWITCH	1					
24	6X6–8259E–20	.SWITCH ASSY	1					
25	6X6–81980–20	.DIODE ASSY	1					

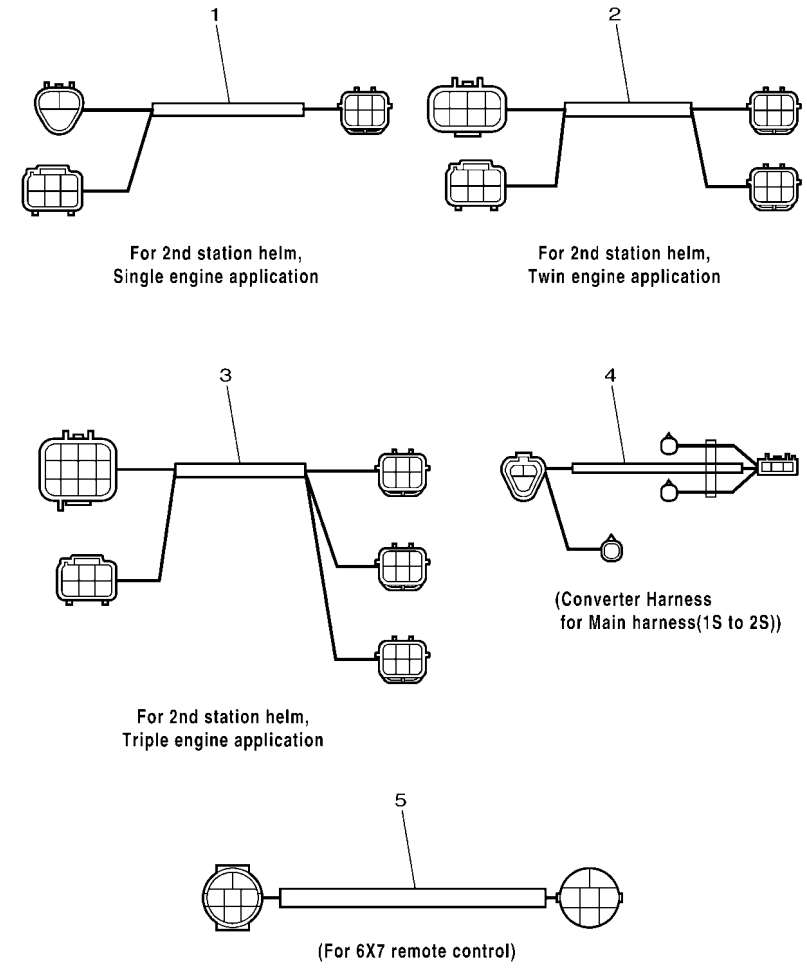

601R10R-P460

FIG. 46 ELECTRICAL DBW REMO-CON 2

REF. NO.	PART NO.	DESCRIPTION	601R					REMARKS
1	6X6–8258A–M0	EXTENSION, WIRE HARNESS	1					AP SINGLE SUB
2	6X6–8258A–N0	EXTENSION, WIRE HARNESS	1					AP TWIN SUB
3	6X6–8258A–P0	EXTENSION, WIRE HARNESS	1					AP TRIPLE SUB
4	6X6–8258A–K0	EXTENSION, WIRE HARNESS	1					AP SINGLE
	6X6–8258A–K0	EXTENSION, WIRE HARNESS	2					AP TWIN
	6X6–8258A–K0	EXTENSION, WIRE HARNESS	3					AP TRIPLE
5	6X7–82590–30	WIRE HARNESS ASSY	1					AP 6X7 RC

Part No.	Applicable model	Remarks
655-48501-02	E8D/EK8D	Rope type
655-48501-10	E8D/EK8D	Ball post type

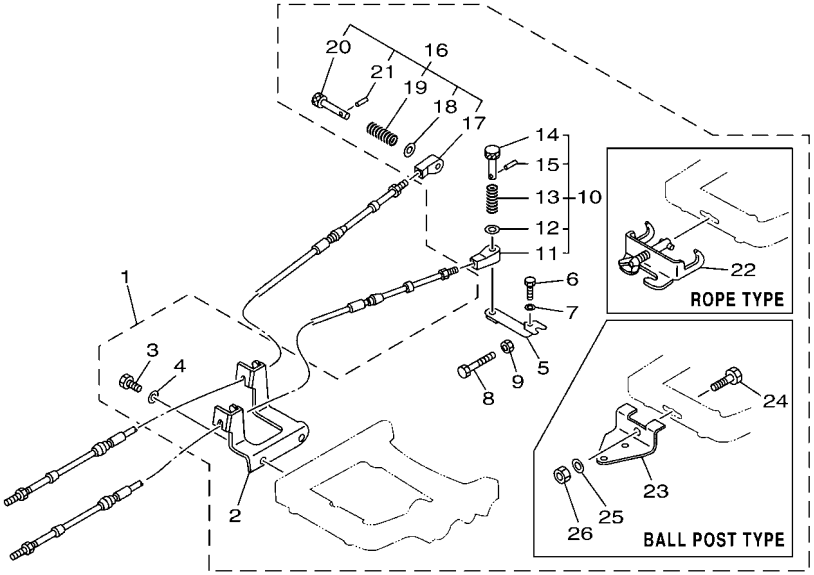

6011100-G370

FIG. 47 REMO CON ATTACHMENT 1

REF. NO.	PART NO.	DESCRIPTION	601R					REMARKS
1	655–48501–02	REMOTE CONT. ATTACHMENT ASSY.	1					UR ROPE TYPE
	655–48501–10	REMOTE CONT. ATTACHMENT ASSY.	1					UR BALL POST TYPE
2	655–48531–51	.BRACKET, REMOTE CONTROL 1	1					
3	97095–06018	.BOLT	2					
4	92995–06600	.WASHER	2					
5	647–48534–50	.THROTTLE LEVER, CONTROL	1					
6	97095–05020	.BOLT	1					
7	92995–05600	.WASHER	1					
8	97090–06045	.BOLT	1					
9	95380–06600	.NUT, HEXAGON	1					
10	647–48330–50	.CABLE END ASSY	1					
11	617–48346–90	..CABLE END, REMOTE CONTROL	1					
12	92990–08600	..WASHER, PLATE	1					
13	90501–10071	..SPRING, COMPRESSION	1					
14	617–48331–91	..HOOK, CABLE	1					
15	91690–30012	..PIN, SPRING	1					
16	647–48340–50	.CABLE END ASSY	1					
17	647–48346–50	..CABLE END, REMOTE CONTROL	1					
18	92990–08600	..WASHER, PLATE	1					
19	90501–10264	..SPRING, COMPRESSION	1					
20	617–48361–91	..HOOK, CABLE	1					
21	91690–30012	..PIN, SPRING	1					
22	700–48510–12	.STEERING HOOK ASSY	1					UR ROPE TYPE
23	676–48511–10	.HOOK, STEERING	1					UR BALL POST TYPE
24	97075–10040	.BOLT	1					
25	92990–10600	.WASHER, PLATE	1					
26	90185–10027	.NUT, SELF-LOCKING	1					

Part No.	Applicable model
63V-48501-00	9.9F, 15F

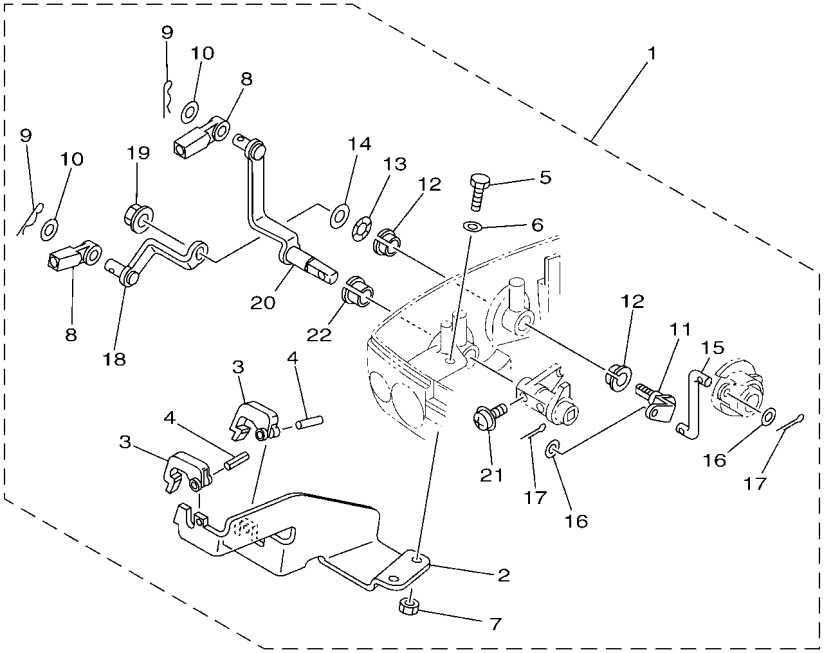

601R10R-M510

FIG. 48 REMO CON ATTACHMENT 2

REF. NO.	PART NO.	DESCRIPTION	601R					REMARKS
1	63V–48501–00	REMOTE CONT. ATTACHMENT ASSY.	1					
2	63V–48531–00	.BRACKET, REMOTE CONTROL 1	1					
3	682–48538–50	.CLAMP, CABLE 1	2					
4	91690–30012	.PIN, SPRING	2					
5	97095–06016	.BOLT	2					
6	92995–06600	.WASHER	2					
7	95380–06600	.NUT, HEXAGON	2					
8	663–48344–00	.CABLE END, REMOTE CONTROL	2					
9	90468–18008	.CLIP	2					
10	90201–08M12	.WASHER, PLATE	2					
11	63V–42154–00	.LEVER, THROTTLE CONTROL	1					
12	90386–10025	.BUSH	2					
13	90206–10M04	.WASHER, WAVE	1					
14	90201–10M02	.WASHER, PLATE	1					
15	63V–42192–00	.ROD 2	1					
16	90201–04M06	.WASHER, PLATE	2					
17	91490–20010	.PIN. COTTER	2					
18	63V–48534–00	.THROTTLE LEVER, CONTROL	1					
19	95780–08300	.NUT, FLANGE	1					
20	63V–48544–00	.LEVER, SHIFTCONTROL	1					
21	90159–05M25	.SCREW, WITH WASHER	1					
22	90386–10009	.BUSH	1					

Part No.	Applicable model
6L2-48501-11	20D, 25N

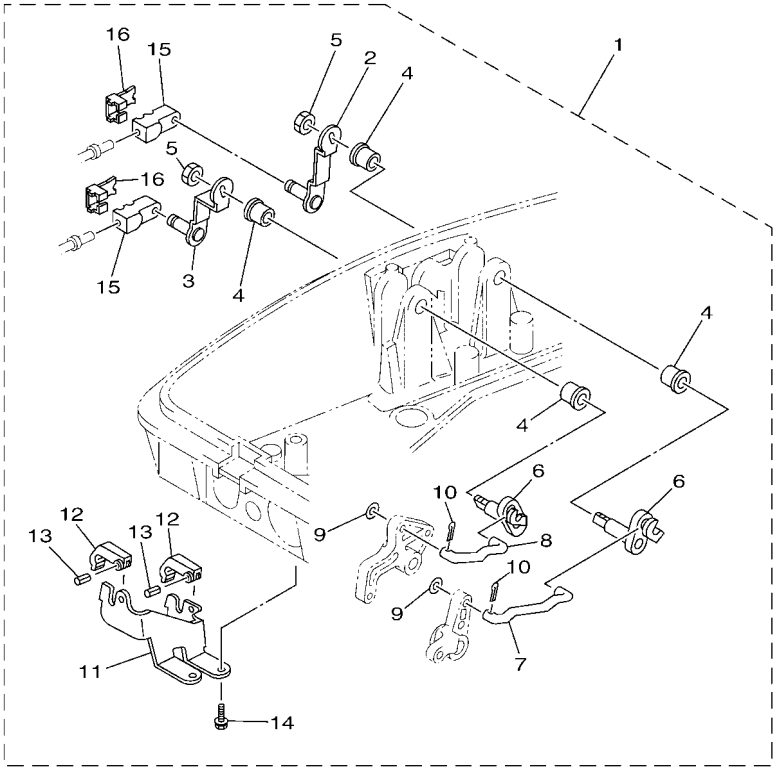

601R10R-M520

FIG. 49 REMO CON ATTACHMENT 3

REF. NO.	PART NO.	DESCRIPTION	601R					REMARKS
1	6L2–48501–11	REMOTE CONT. ATTACHMENT ASSY.	1					
2	6L2–48544–01	.LEVER, SHIFTCONTROL	1					
3	6L2–48534–01	.THROTTLE LEVER, CONTROL	1					
4	90386–10009	.BUSH	4					
5	95780–08300	.NUT, FLANGE	2					
6	6L2–42154–01	.LEVER, THROTTLE CONTROL	2					
7	6L2–42191–01	.ROD 1	1					
8	6L2–42192–20	.ROD 2	1					
9	90202–05088	.WASHER, PLATE	2					
10	91490–20010	.PIN. COTTER	2					
11	6L2–48531–00	.BRACKET, REMOTE CONTROL 1	1					
12	682–48538–50	.CLAMP, CABLE 1	2					
13	91690–30012	.PIN, SPRING	2					
14	90105–06M23	.BOLT FLANGE	2					
15	6G8–26363–00	.END, WIRE 1	2					
16	6G8–26364–00	.END, CABLE	2					

Part No.	Applicable model	Remarks
69R-48501-10	25B, 25X, 30H E25B, E30H	Rope type
69R-48501-00		Ball post/ Steering guide type

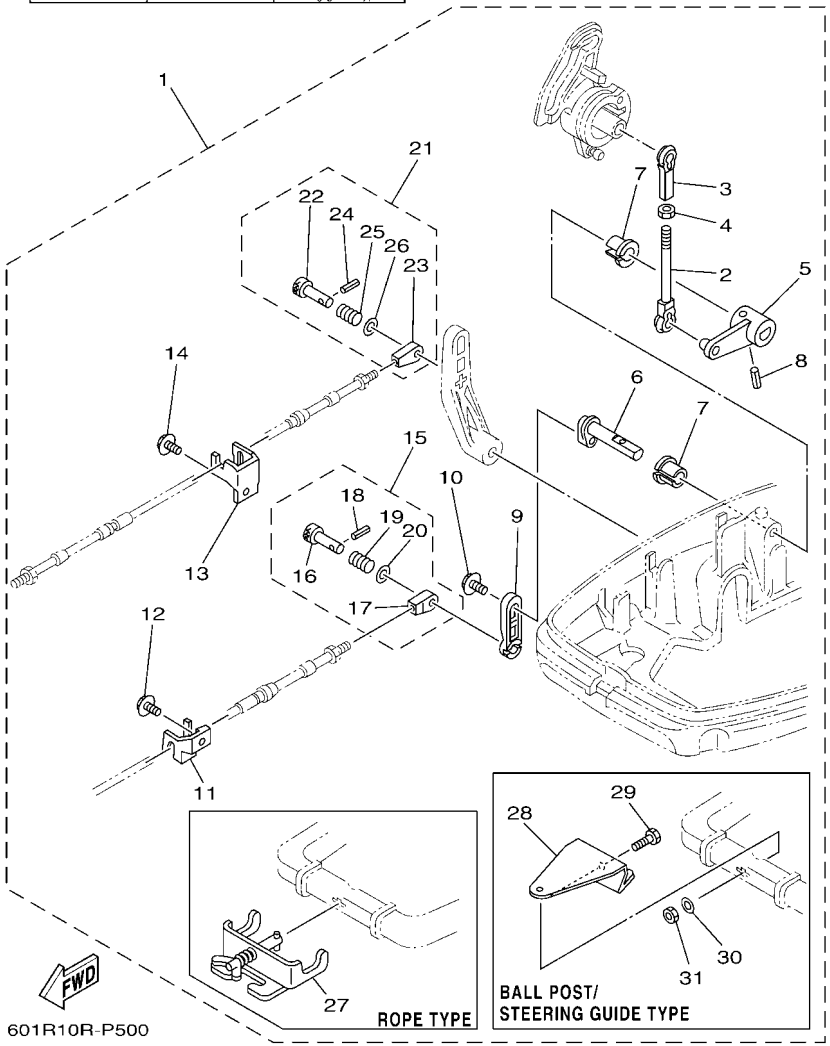

FIG. 50 REMO CON ATTACHMENT 4

REF. NO.	PART NO.	DESCRIPTION	601R					REMARKS
1	69R–48501–10	REMOTE CONT. ATTACHMENT ASSY.	1					UR ROPE TYPE
	69R–48501–00	REMOTE CONT. ATTACHMENT ASSY.	1					UR
2	682–41238–01	.JOINT, LINK	1					
3	682–41237–00	.JOINT, LINK	1					
4	95380–05600	.NUT	1					
5	69S–42157–10	.LEVER, THROTTLE	1					
6	656–42153–10–4D	.SHAFT, THROTTLE CONTROL	1					
7	90386–10009	.BUSH	2					
8	91690–40018	.PIN, SPRING	1					
9	648–48534–50–4D	.THROTTLE LEVER, CONTROL	1					
10	97595–06512	.BOLT, WITH WASHER	1					
11	689–48532–51	.BRACKET, REMOTE CONTROL 2	1					
12	97595–06516	.BOLT, WITH WASHER	1					
13	689–48531–51	.BRACKET, REMOTE CONTROL 1	1					
14	97595–06516	.BOLT, WITH WASHER	1					
15	648–48340–50	.CABLE END ASSY	1					
16	617–48361–91	..HOOK, CABLE	1					
17	617–48346–90	..CABLE END, REMOTE CONTROL	1					
18	91690–30012	..PIN, SPRING	1					
19	90501–10264	..SPRING, COMPRESSION	1					
20	92990–08600	..WASHER, PLATE	1					
21	648–48330–50	.CABLE END ASSY	1					
22	617–48331–91	..HOOK, CABLE	1					
23	648–48346–50	..CABLE END, REMOTE CONTROL	1					
24	91690–30012	..PIN, SPRING	1					
25	90501–10071	..SPRING, COMPRESSION	1					
26	92990–08600	..WASHER, PLATE	1					

Part No.	Applicable model	Remarks
69R-48501-10	25B, 25X, 30H E25B, E30H	Rope type
69R-48501-00		Ball post/ Steering guide type

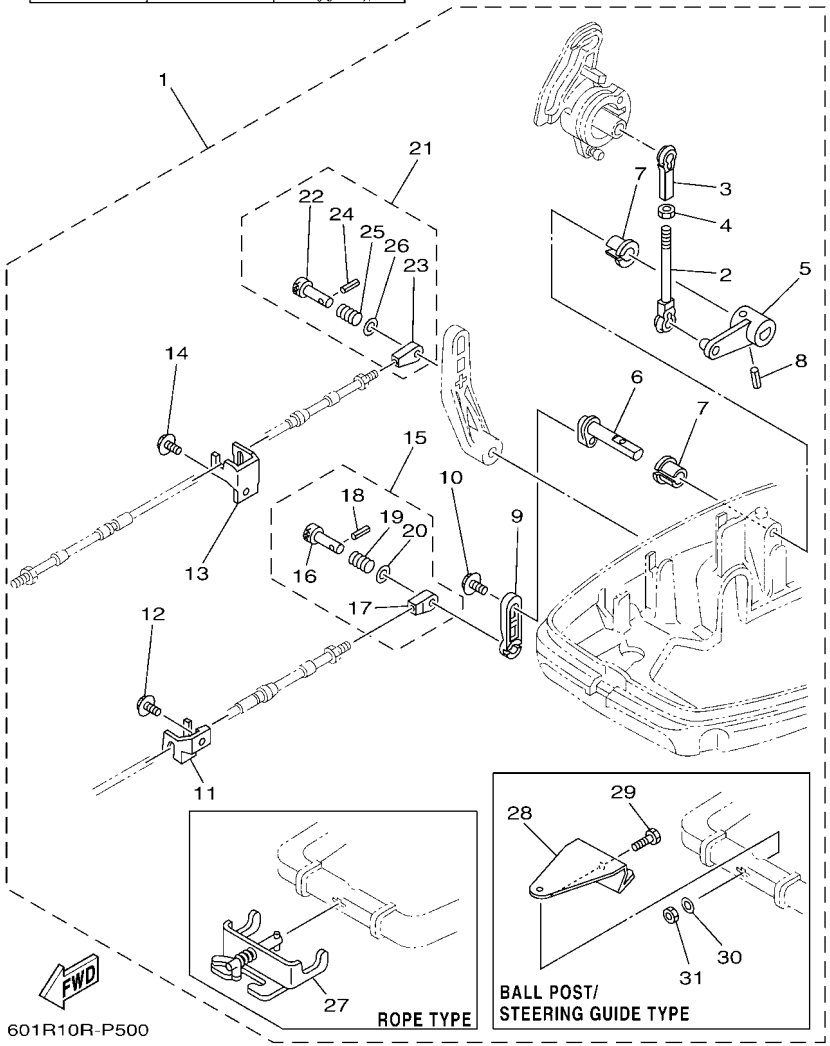

FIG. 50 REMO CON ATTACHMENT 4

REF. NO.	PART NO.	DESCRIPTION	601R					REMARKS
27	700–48510–12	.STEERING HOOK ASSY	1					ROPE TYPE
28	689–48511–02	.HOOK, STEERING	1					
29	97075–10040	.BOLT	1					
30	92995–10600	.WASHER	1					
31	90185–10027	.NUT, SELF-LOCKING	1					

Part No.	Applicable model
6J8-48501-03-4D	30D
6J8-48501-11	30D

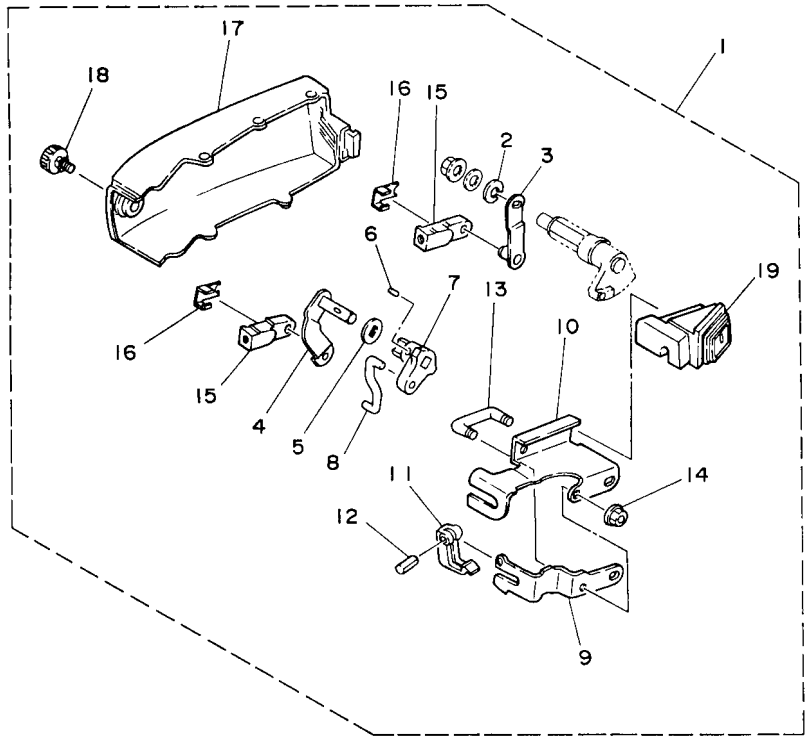

6011100-G410

FIG. 51 REMO CON ATTACHMENT 5

REF. NO.	PART NO.	DESCRIPTION	601R					REMARKS
1	6J8–48501–03–4D	REMOTE CONT. ATTACHMENT ASSY.	1					UR
	6J8–48501–11	REMOTE CONT. ATTACHMENT ASSY.	1					UR
2	92990–08100	.WASHER, SPRING	1					
3	6J8–48534–00	.THROTTLE LEVER, CONTROL	1					
4	6J8–48544–02	.LEVER, SHIFTCONTROL	1					
5	6J8–44177–00	.WASHER	1					
6	90254–03M03	.PIN, SPRING	1					
7	6J8–44173–02	.LEVER, SHIFT CONTROL	1					
8	6J8–42169–01	.JOINT	1					
9	6J8–48531–00	.BRACKET, REMOTE CONTROL 1	1					
10	6J8–48532–00	.BRACKET, REMOTE CONTROL 2	1					
11	682–48538–50	.CLAMP, CABLE 1	1					
12	91690–30012	.PIN, SPRING	1					
13	90109–06M29	.BOLT	1					
14	90179–06M24	.NUT	2					
15	6G8–26363–00	.END, WIRE 1	2					
16	6G8–26364–00	.END, CABLE	2					
17	6J8–42723–51	.COVER, BOTTOM	1					
18	6J8–42846–00	.SCREW	1					
19	6J8–42724–10	.GROMMET	1					

Part No.	Applicable model
66T-48501-01	40X, E40X

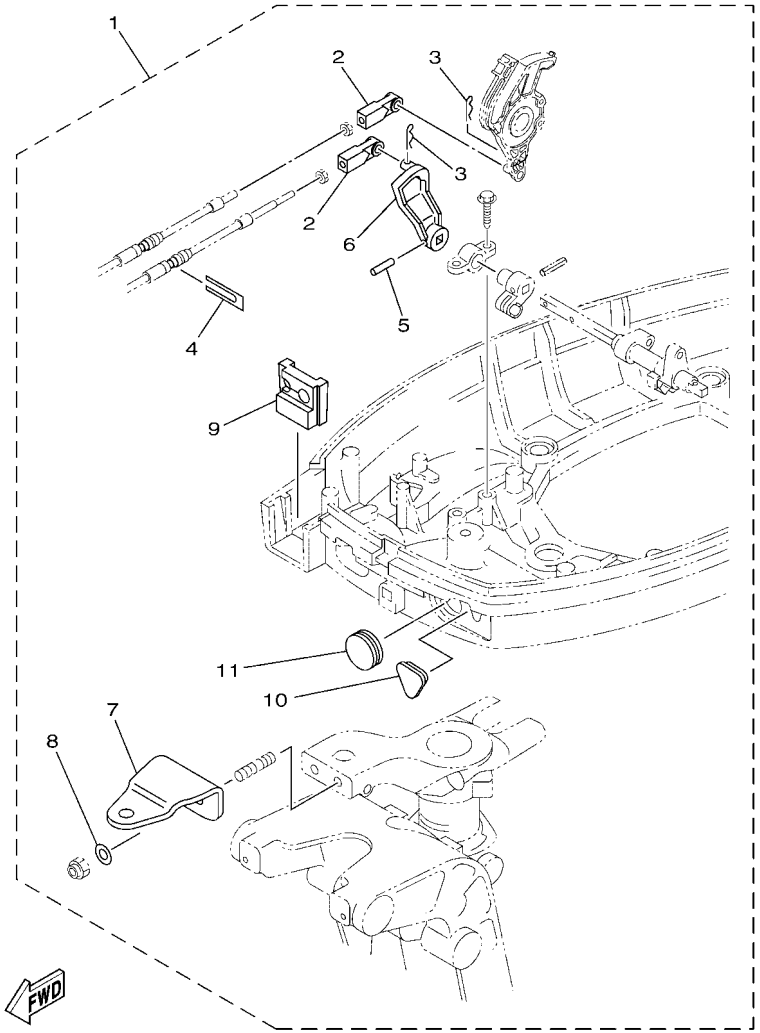

601R10R-M550

FIG. 52 REMO CON ATTACHMENT 6

REF. NO.	PART NO.	DESCRIPTION	601R					REMARKS
1	66T–48501–01	REMOTE CONT. ATTACHMENT ASSY.	1					
2	663–48344–00	.CABLE END, REMOTE CONTROL	2					
3	90468–18008	.CLIP	2					
4	6H3–48538–00	.CLAMP, CABLE 1	1					
5	90254–03M05	.PIN, SPRING	1					
6	66T–44125–01	.LEVER, SHIFT ROD	1					
7	65W–48511–01	.HOOK, STEERING	1					
8	90201–10120	.WASHER, PLATE	2					
9	66T–42725–30	.GROMMET	1					
10	65W–26326–10	.GROMMET	1					
11	65W–42726–10	.GROMMET	1					

Part No.	Applicable model
6DR-48501-00	F8F(F8B), FT8G, F9.9J(F9.9B), FT9.9L(T9.9B)

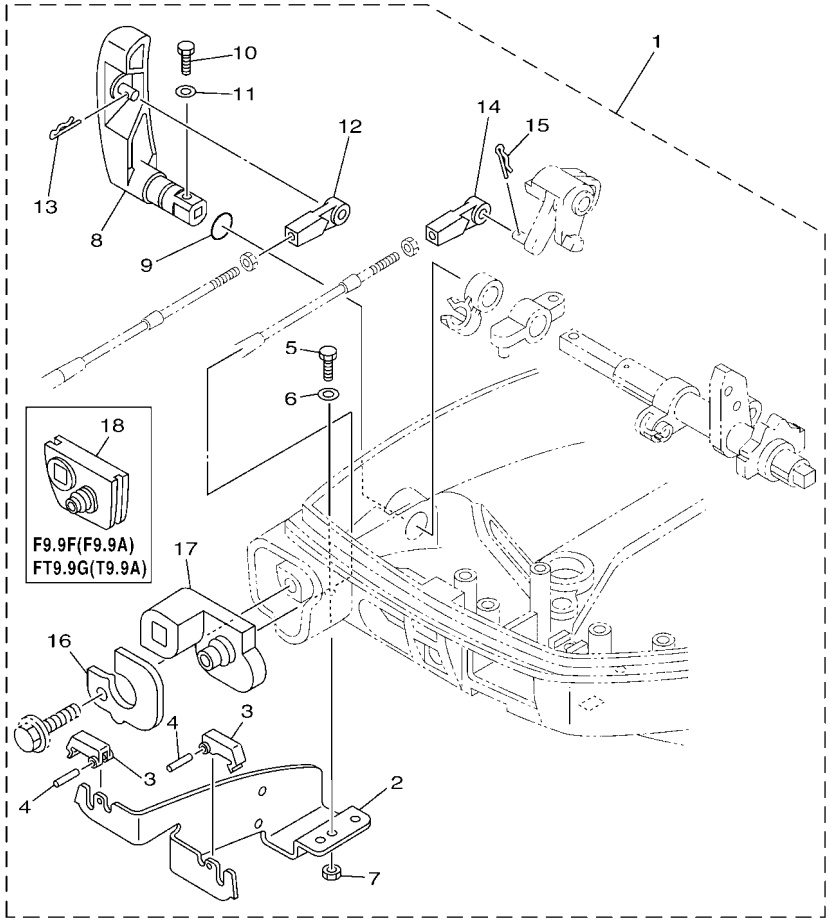

601R10R-P530

FIG. 53 REMO CON ATTACHMENT 7

REF. NO.	PART NO.	DESCRIPTION	601R					REMARKS
1	6DR–48501–00	REMOTE CONT. ATTACHMENT ASSY.	1					
2	68T–48531–00	.BRACKET, REMOTE CONTROL 1	1					
3	682–48538–50	.CLAMP, CABLE 1	2					
4	91690–30012	.PIN, SPRING	2					
5	97095–06012	.BOLT	2					
6	92995–06600	.WASHER	2					
7	95380–06600	.NUT, HEXAGON	2					
8	6AU–44111–10	.HANDLE, GEAR SHIFT	1					
9	93210–12327	.O-RING	1					
10	97095–05016	.BOLT	1					
11	92995–05600	.WASHER	1					
12	663–48344–00	.CABLE END, REMOTE CONTROL	1					
13	90468–18008	.CLIP	1					
14	663–48344–00	.CABLE END, REMOTE CONTROL	1					
15	90468–18008	.CLIP	1					
16	6DR–42761–10	.STOPPER	1					
17	6DR–42725–10	.GROMMET	1					
18	68T–42725–10	.GROMMET	1					

Part No.	Applicable model
6AH-48501-00	F9.9H, F15C (F15A), F20B (F20A), F20C

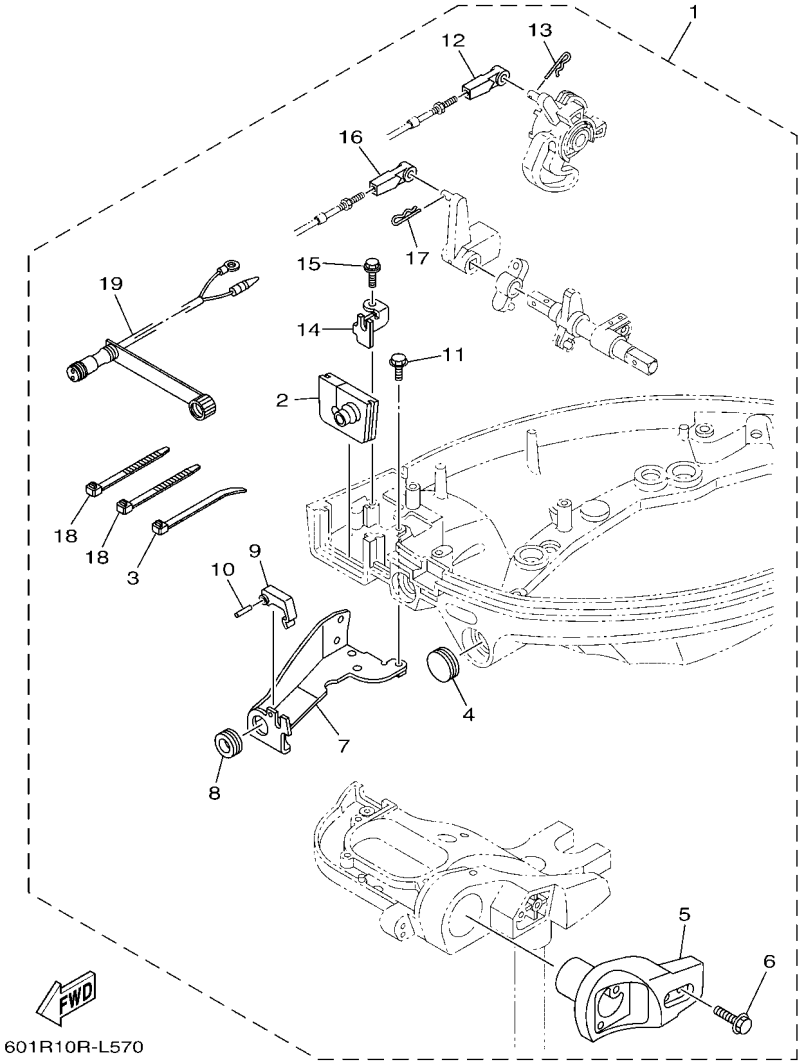

FIG. 54 REMO CON ATTACHMENT 8

REF. NO.	PART NO.	DESCRIPTION	601R					REMARKS
1	6AH–48501–00	REMOTE CONT. ATTACHMENT ASSY.	1					
2	6AH–42724–10	.GROMMET	1					
3	90465–11M10	.CLAMP	1					
4	65W–42726–10	.GROMMET	1					
5	6AH–83773–00	.BRACKET, SWITCH	1					
6	97595–06530	.BOLT, WITH WASHER	2					
7	6AH–48532–00	.BRACKET, REMOTE CONTROL 2	1					
8	90480–19031	.GROMMET	1					
9	682–48538–50	.CLAMP, CABLE 1	1					
10	91690–30012	.PIN, SPRING	1					
11	97595–06514	.BOLT, WITH WASHER	2					
12	663–48344–00	.CABLE END, REMOTE CONTROL	1					
13	90468–18008	.CLIP	1					
14	6AH–48531–00	.BRACKET, REMOTE CONTROL 1	1					
15	90109–06M86	.BOLT	1					
16	663–48344–00	.CABLE END, REMOTE CONTROL	1					
17	90468–18008	.CLIP	1					
18	90465–13M18	.CLAMP	2					
19	6D5–84340–00	.SOCKET CORD ASSY 1	1					

Part No.	Applicable model
6BL-48501-00	F25D (F25A, F25B)

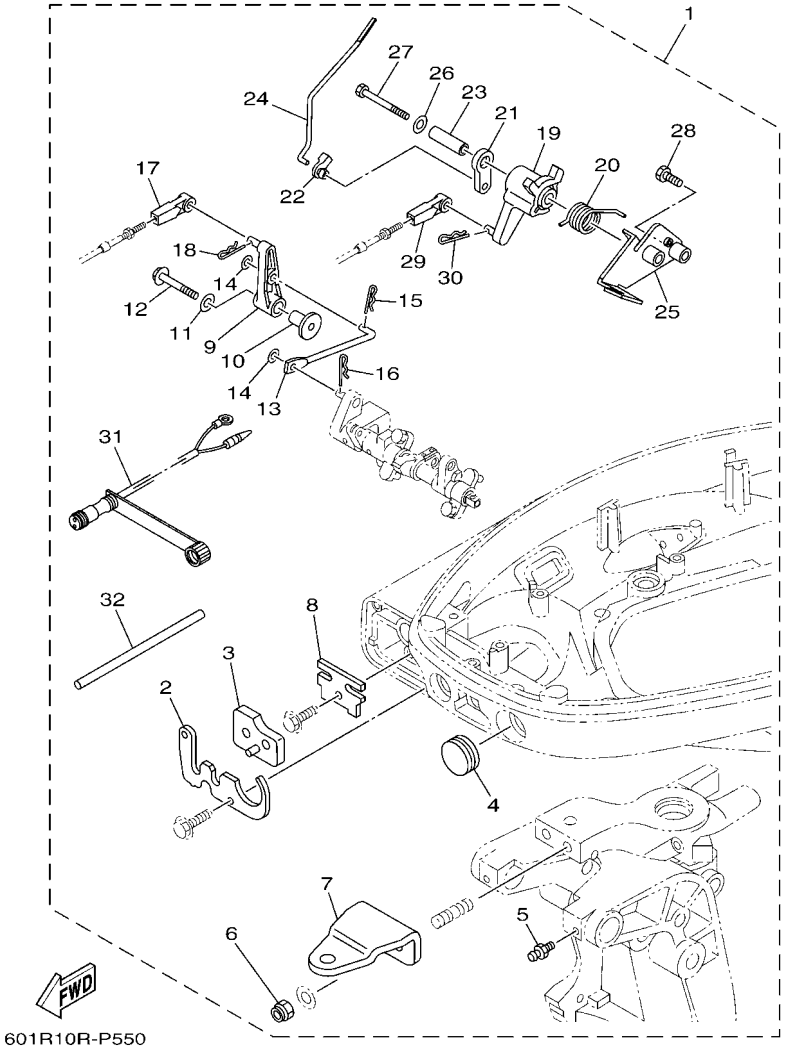

FIG. 55 REMO CON ATTACHMENT 9

REF. NO.	PART NO.	DESCRIPTION	601R					REMARKS
1	6BL–48501–00	REMOTE CONT. ATTACHMENT ASSY.	1					
2	6BL–42761–00	.STOPPER	1					
3	6BL–42727–00	.GROMMET	1					
4	65W–42726–10	.GROMMET	1					
5	93700–06M03	.NIPPLE, GREASE	2					
6	90185–10027	.NUT, SELF-LOCKING	2					
7	65W–48511–01	.HOOK, STEERING	1					
8	6BL–48538–00	.CLAMP, CABLE 1	1					
9	6BL–44125–00	.LEVER, SHIFT ROD	1					
10	90387–06M86	.COLLAR	1					
11	90201–06M31	.WASHER, PLATE	1					
12	97595–06535	.BOLT, WITH WASHER	1					
13	6BL–44192–00	.LINK, SHIFT ROD	1					
14	90201–05M06	.WASHER, PLATE	2					
15	90468–10005	.CLIP	1					
16	90468–18001	.CLIP	1					
17	663–48344–00	.CABLE END, REMOTE CONTROL	1					
18	90468–18008	.CLIP	1					
19	6BL–41638–00	.PULLEY	1					
20	90508–20040	.SPRING, TORSION	1					
21	65W–41283–00	.LEVER, FREE ACCEL.	1					
22	6J8–41262–00	.JOINT, CHOKE LEVER	1					
23	90387–06139	.COLLAR	1					
24	6BL–41211–00	.LINK, ACCEL.	1					
25	6BL–14571–10	.BRACKET, THROTTLE	1					
26	90201–06M31	.WASHER, PLATE	1					
27	97095–06065	.BOLT	1					

Part No.	Applicable model
6BL-48501-00	F25D (F25A. F25B)

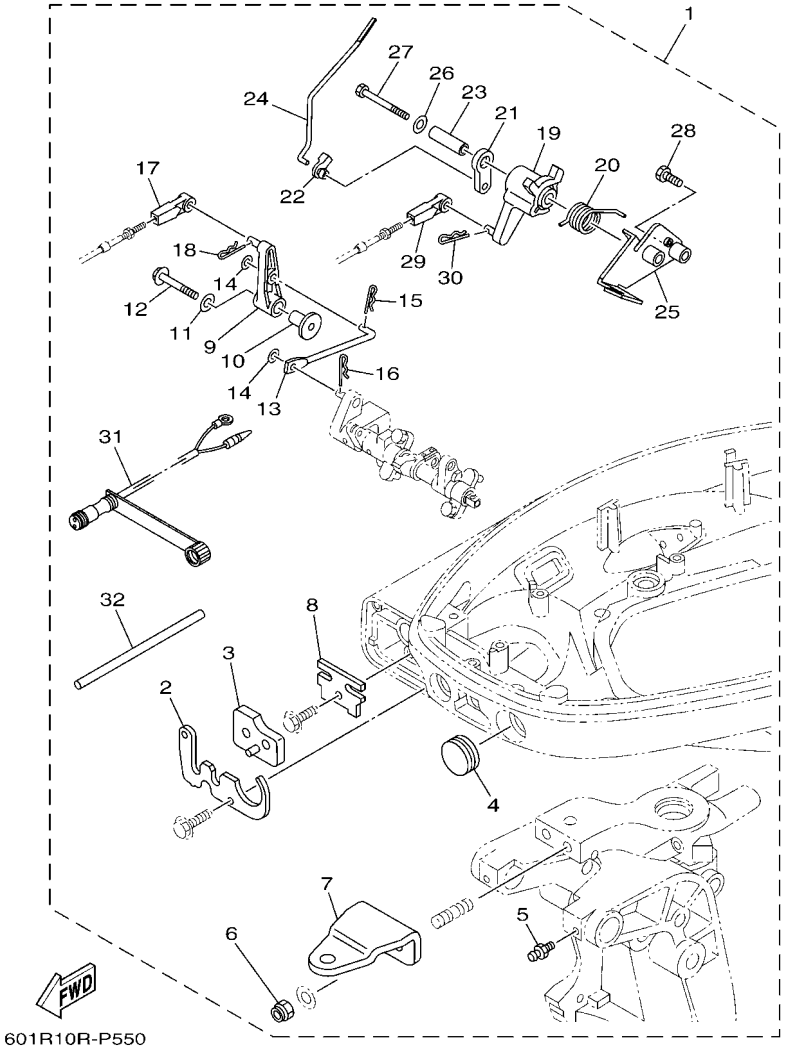

FIG. 55 REMO CON ATTACHMENT 9

REF. NO.	PART NO.	DESCRIPTION	601R					REMARKS
28	97095–06025	.BOLT	1					
29	663–48344–00	.CABLE END, REMOTE CONTROL	1					
30	90468–18008	.CLIP	1					
31	6D5–84340–00	.SOCKET CORD ASSY 1	1					
32	90446–09M42	.HOSE (L160)	2					

STEERING HOOK

Part No.	Applicable model	Remarks
6L2-48511-00	25N	Steering guide type

Part No.	Applicable model	Remarks
6J8-48511-52	30D	Steering guide type

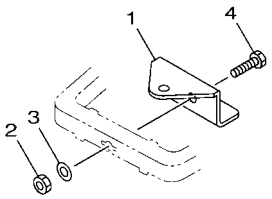

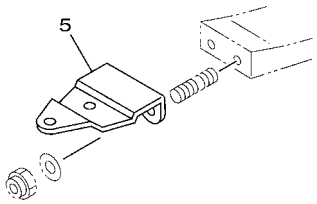

Part No.	Applicable model	Remarks
676-48511-02	E40J	Steering guide type

Part No.	Applicable model	Remarks
63D-48511-01	40V, 50H FT50C, F50D	Steering guide type

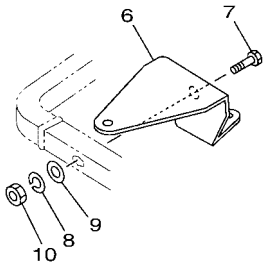

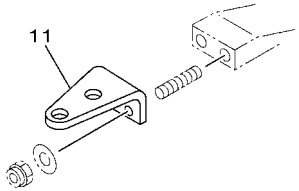

Part No.	Applicable model	Remarks
688-48511-12	75C, 90A 75A, 85A	Steering guide type

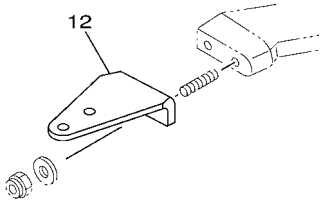

601R10R-Q560

FIG. 56 STEERING HOOK 1

REF. NO.	PART NO.	DESCRIPTION	601R					REMARKS
1	6L2–48511–00	HOOK, STEERING	1					STEERING GUIDE
2	90185–10027	NUT, SELF-LOCKING	1					
3	92990–10600	WASHER, PLATE	1					
4	97075–10040	BOLT	1					
5	6J8–48511–52	HOOK, STEERING	1					STEERING GUIDE
6	676–48511–02	HOOK, STEERING	1					STEERING GUIDE
7	97075–10040	BOLT	1					
8	92990–10100	WASHER, SPRING	1					
9	92990–10600	WASHER, PLATE	1					
10	95380–10600	NUT	1					
11	63D–48511–01	HOOK, STEERING	1					STEERING GUIDE
12	688–48511–12	HOOK, STEERING	1					STEERING GUIDE

STEERING HOOK

Part No.	Applicable model	Remarks
63V-48511-01	F8F (F8B), FT8G F9.9J (F9.9B) FT9.9L (T9.9B) 9.9F, 15F	Steering guide type

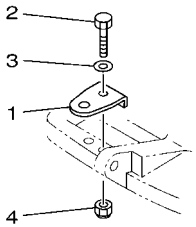

Part No.	Applicable model	Remarks
6AH-48511-01	F9.9H, F15C(F15A) F20B (F20A) , F20C	Steering guide type

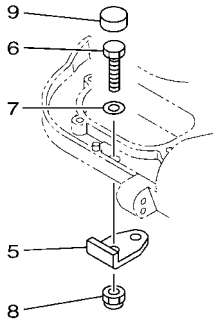

Part No.	Applicable model	Remarks
65W-48511-01	F20D F25D (F25A) FT25F(T25A) F30B (F30A), F40F (F40A) (E) 40X, F40G F50H (F50B), FT50J (T50B) F60F (F60B), FT60G (T60B) F40H, F70A (F70A)	Steering guide type

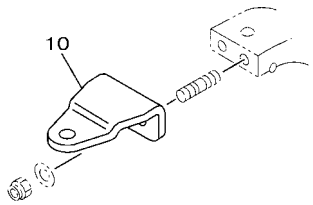

Part No.	Applicable model	Remarks
67F-48511-01	F75B (F75A) F80B (F80A) F90B (F90A) F100D (F100A)	Steering guide type

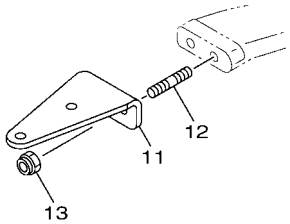

Part No.	Applicable model	Remarks
68V-48511-01	F75C F100B, F115A	Steering guide type

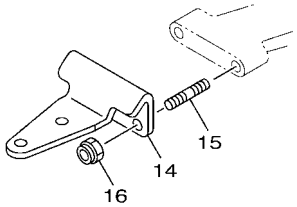

601R10R-Q570

FIG. 57 STEERING HOOK 2

REF. NO.	PART NO.	DESCRIPTION	601R					REMARKS
1	63V–48511–01	HOOK, STEERING	1					STEERING GUIDE
2	97075–08035	BOLT	1					
3	92995–08600	WASHER	1					
4	90185–08057	NUT, SELF-LOCKING	1					
5	6AH–48511–01	HOOK, STEERING	1					STEERING GUIDE
6	97095–08025	BOLT	1					
7	92995–08600	WASHER	1					
8	90185–08057	NUT, SELF-LOCKING	1					
9	6AH–44194–00	CAP	1					
10	65W–48511–01	HOOK, STEERING	1					STEERING GUIDE
11	67F–48511–01	HOOK, STEERING	1					STEERING GUIDE
12	90116–10062	BOLT, STUD	2					
13	90185–10027	NUT, SELF-LOCKING	2					
14	68V–48511–01	HOOK, STEERING	1					STEERING GUIDE
15	90116–10062	BOLT, STUD	2					
16	90185–10027	NUT, SELF-LOCKING	2					

STEERING HOOK

Part No.	Applicable model	Remarks
676-48511-10	E8D, EK8D, 8F	Ball post type

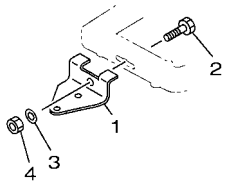

Part No.	Applicable model	Remarks
6G8-48511-10	9.9F, 15F, 30D	Ball post type

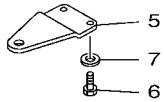

Part No.	Applicable model	Remarks
6J8-48511-01-8D	30D	Ball post type/ Steering guide type

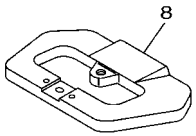

Part No.	Applicable model	Remarks
689-48511-02	25B, 25X, 30H E25B, E30H	Ball post type/ Steering guide type

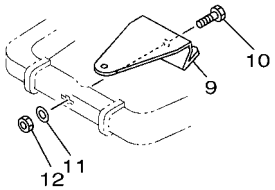

Part No.	Applicable model	Remarks
700-48510-12	E8D, EK8D 25B, 25X, 30H E25B, E30H	Rope type

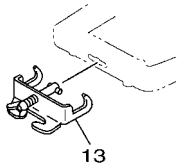

Part No.	Applicable model	Remarks
6G8-48511-00	9.9F, 15F, 30D	Rope type

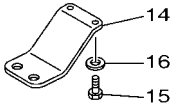

Part No.	Applicable model	Remarks
69G-48511-10	FT9.9L (T9.9B)	For Linkage to main-engine

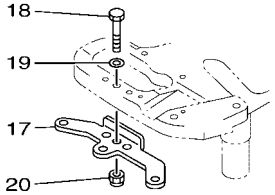

601R10R-Q580

FIG. 58 STEERING HOOK 3

REF. NO.	PART NO.	DESCRIPTION	601R					REMARKS
1	676–48511–10	HOOK, STEERING	1					BALL POST TYPE
2	97075–10040	BOLT	1					
3	92990–10600	WASHER, PLATE	1					
4	90185–10027	NUT, SELF-LOCKING	1					
5	6G8–48511–10	HOOK, STEERING	1					BALL POST TYPE
6	97095–06016	BOLT	2					
7	92995–06600	WASHER	2					
8	6J8–48511–01–8D	HOOK, STEERING	1					
9	689–48511–02	HOOK, STEERING	1					
10	97075–10040	BOLT	1					
11	92990–10600	WASHER, PLATE	1					
12	90185–10027	NUT, SELF-LOCKING	1					
13	700–48510–12	STEERING HOOK ASSY	1					ROPE TYPE
14	6G8–48511–00	HOOK, STEERING	1					ROPE TYPE
15	97095–06016	BOLT	2					
16	92995–06600	WASHER	2					
17	69G–48511–10	HOOK, STEERING	1					
18	97075–08035	BOLT	1					
19	92995–08600	WASHER	1					
20	90185–08057	NUT, SELF-LOCKING	1					

Part No.	Applicable model
63V-61350-00	9.9F, 15F, E9.9D, E15D

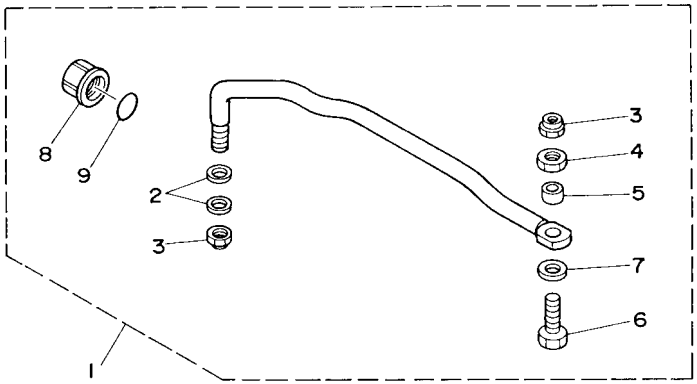

601R10R-M630

FIG. 59 STEERING GUIDE 1

REF. NO.	PART NO.	DESCRIPTION	601R					REMARKS
1	63V–61350–00	STEERING GUIDE ATTACHMENT KIT	1					
2	90201–10M20	.WASHER, PLATE	2					
3	90185–09M01	.NUT, SELF-LOCKING	2					
4	90170–09M03	.NUT	1					
5	90387–10M42	.COLLAR	1					
6	6E5–61355–00	.BOLT	1					
7	90201–10M63	.WASHER, PLATE	1					
8	6E5–43145–01	.CAP, CLAMP BRACKET	1					
9	93210–16275	.O-RING	1					

Part No.	Applicable model
68T-61350-10	F8F (F8B), FT8G F9.9J (F9.9B), FT9.9L (T9.9B)

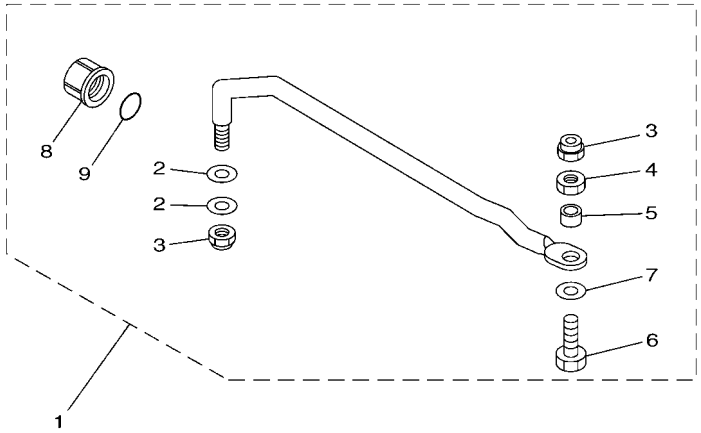

601R10R-P600

FIG. 60 STEERING GUIDE 2

REF. NO.	PART NO.	DESCRIPTION	601R					REMARKS
1	68T–61350–10	STEERING GUIDE ATTACHMENT KIT	1					
2	90201–10M20	.WASHER, PLATE	2					
3	90185–09M01	.NUT, SELF-LOCKING	2					
4	90170–09M03	.NUT	1					
5	90387–10M42	.COLLAR	1					
6	6E5–61355–00	.BOLT	1					
7	90201–10M63	.WASHER, PLATE	1					
8	6E5–43145–01	.CAP, CLAMP BRACKET	1					
9	93210–16275	.O-RING	1					

Part No.	Applicable model
6AH-61350-00	F9.9H, F15C (F15A), F20B (F20A), F20C

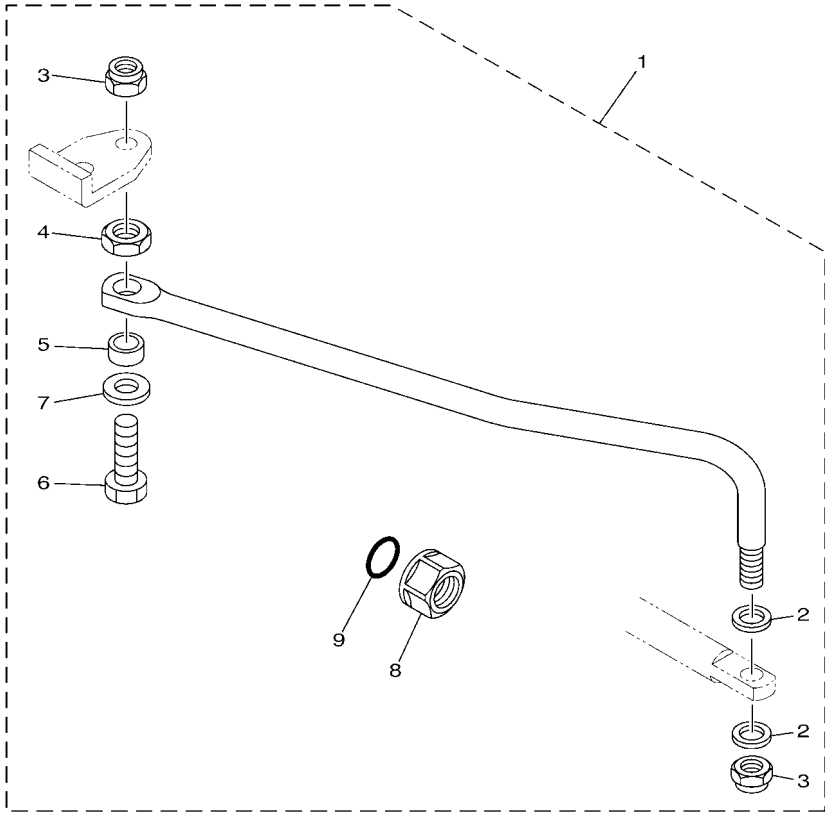

601R10R-N660

FIG. 61 STEERING GUIDE 3

REF. NO.	PART NO.	DESCRIPTION	601R					REMARKS
1	6AH–61350–00	STEERING GUIDE ATTACHMENT KIT	1					
2	90201–10M20	.WASHER, PLATE	2					
3	90185–09M01	.NUT, SELF-LOCKING	2					
4	90170–09M03	.NUT	1					
5	90387–10M42	.COLLAR	1					
6	6E5–61355–00	.BOLT	1					
7	90201–10M63	.WASHER, PLATE	1					
8	6E5–43145–01	.CAP, CLAMP BRACKET	1					
9	93210–16275	.O-RING	1					

Part No.	Applicable model
689-61350-02	25B, 30H, 30D

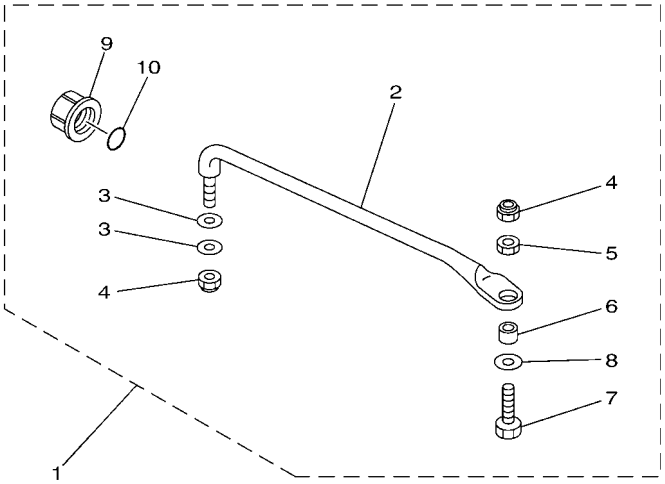

601R10R-Q620

FIG. 62 STEERING GUIDE 4

REF. NO.	PART NO.	DESCRIPTION	601R					REMARKS
1	689–61350–02	STEERING GUIDE ATTACHMENT KIT	1					
2	689–61351–01	.ROD, STEERING LINK	1					
3	90201–10M20	.WASHER, PLATE	2					
4	90185–09M01	.NUT, SELF-LOCKING	2					
5	90170–09M03	.NUT	1					
6	90387–10M42	.COLLAR	1					
7	6E5–61355–00	.BOLT	1					
8	90201–10M63	.WASHER, PLATE	1					
9	6E5–43145–01	.CAP, CLAMP BRACKET	1					
10	93210–16275	.O-RING	1					

Part No.	Applicable model
63D-61350-00	40V, 50H FT50C, F50D

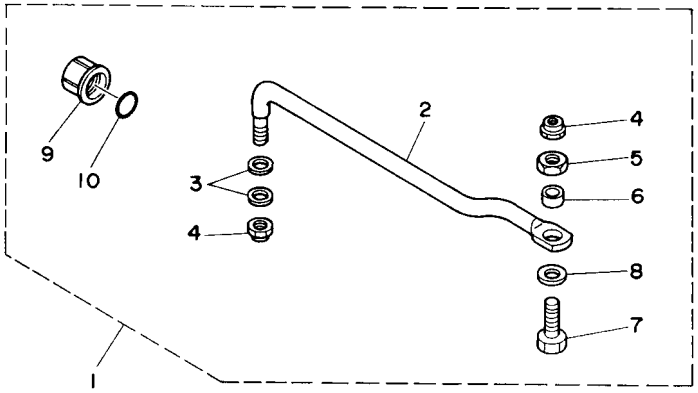

601R10R-M670

FIG. 63 STEERING GUIDE 5

REF. NO.	PART NO.	DESCRIPTION	601R					REMARKS
1	63D–61350–00	STEERING GUIDE ATTACHMENT KIT	1					
2	63D–61351–00	.ROD, STEERING LINK	1					
3	90201–10M20	.WASHER, PLATE	2					
4	90185–09M01	.NUT, SELF-LOCKING	2					
5	90170–09M03	.NUT	1					
6	90387–10M42	.COLLAR	1					
7	90101–09M01	.BOLT	1					
8	90201–10M63	.WASHER, PLATE	1					
9	6E5–43145–01	.CAP, CLAMP BRACKET	1					
10	93210–16275	.O-RING	1					

Part No.	Applicable model
65W-61350-00	40X F50H (F50B), FT50J (T50B), F40H, F40G F60F (F60B), FT60G (T60B), F70A (F70A)

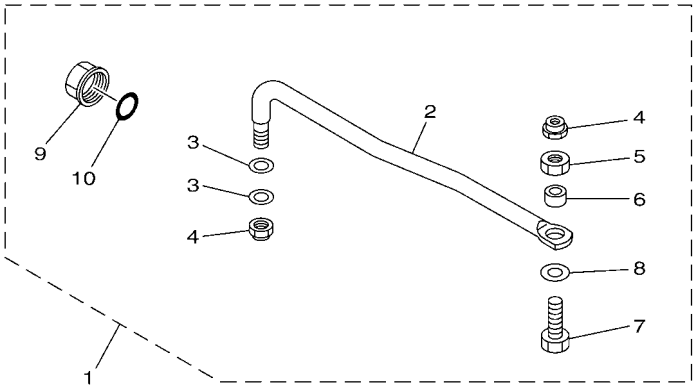

601R10R-M680

FIG. 64 STEERING GUIDE 6

REF. NO.	PART NO.	DESCRIPTION	601R					REMARKS
1	65W–61350–00	STEERING GUIDE ATTACHMENT KIT	1					
2	65W–61351–00	.ROD, STEERING LINK	1					
3	90201–10M20	.WASHER, PLATE	2					
4	90185–09M01	.NUT, SELF-LOCKING	2					
5	90170–09M03	.NUT	1					
6	90387–10M42	.COLLAR	1					
7	90101–09M01	.BOLT	1					
8	90201–10M63	.WASHER, PLATE	1					
9	6E5–43145–01	.CAP, CLAMP BRACKET	1					
10	93210–16275	.O-RING	1					

Part No.	Applicable model
697-61350-00	55B
688-61350-10	55D, 60F, 70B, 75C, 90A 75A, 85A, E60H, E75B

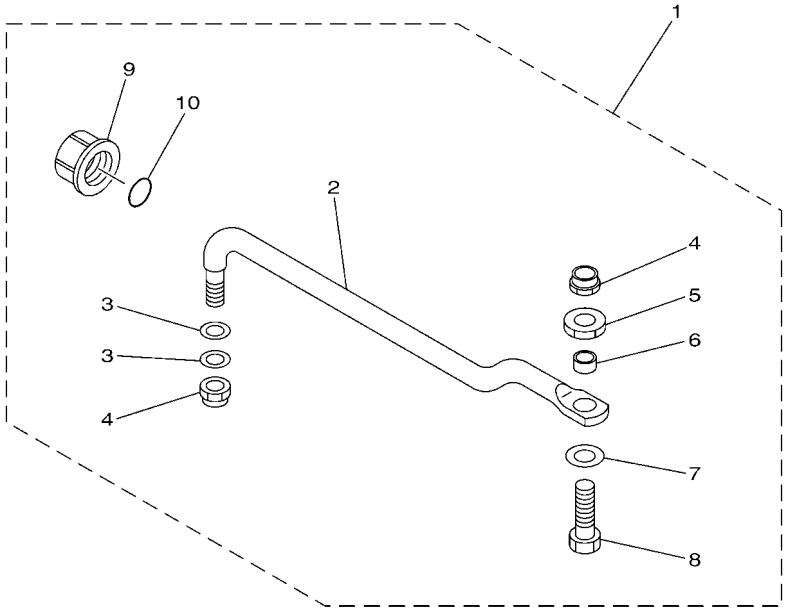

601R10R-P650

FIG. 65 STEERING GUIDE 7

REF. NO.	PART NO.	DESCRIPTION	601R					REMARKS
1	697–61350–00	STEERING GUIDE ATTACHMENT KIT	1					UR
	688–61350–10	STEERING GUIDE ATTACHMENT KIT	1					UR
2	697–61351–00	.ROD, STEERING LINK	1					FOR 697-61350-00
	688–61351–10	.ROD, STEERING LINK	1					FOR 688-61350-10
3	90201–10M20	.WASHER, PLATE	2					
4	90185–09M01	.NUT, SELF-LOCKING	2					
5	90170–09M03	.NUT	1					
6	90387–10M42	.COLLAR	1					
7	90201–10M63	.WASHER, PLATE	1					
8	6E5–61355–00	.BOLT	1					
9	6E5–43145–01	.CAP, CLAMP BRACKET	1					
10	93210–16275	.O-RING	1					

Part No.	Applicable model
67F-61350-00	F75B (F75A), F80B (F80A) F90B (F90A), F100D (F100A)

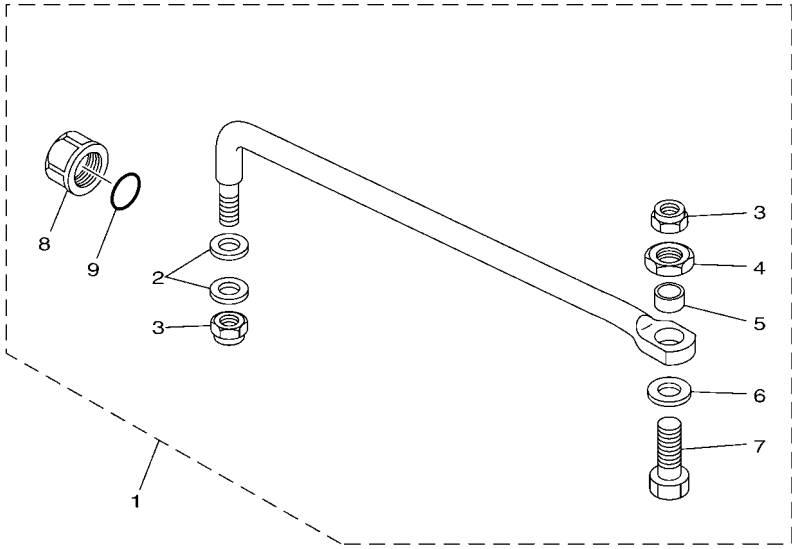

601R10R-P660

FIG. 66 STEERING GUIDE 8

REF. NO.	PART NO.	DESCRIPTION	601R					REMARKS
1	67F–61350–00	STEERING GUIDE ATTACHMENT KIT	1					
2	90201–10M20	.WASHER, PLATE	2					
3	90185–09M01	.NUT, SELF-LOCKING	2					
4	90170–09M03	.NUT	1					
5	90387–10M42	.COLLAR	1					
6	90201–10M63	.WASHER, PLATE	1					
7	90101–09M01	.BOLT	1					
8	6E5–43145–01	.CAP, CLAMP BRACKET	1					
9	93210–16275	.O-RING	1					

Part No.	Applicable model
6E5-61350-02	F75C, F100B F115A – F300 (V6), 115 and larger

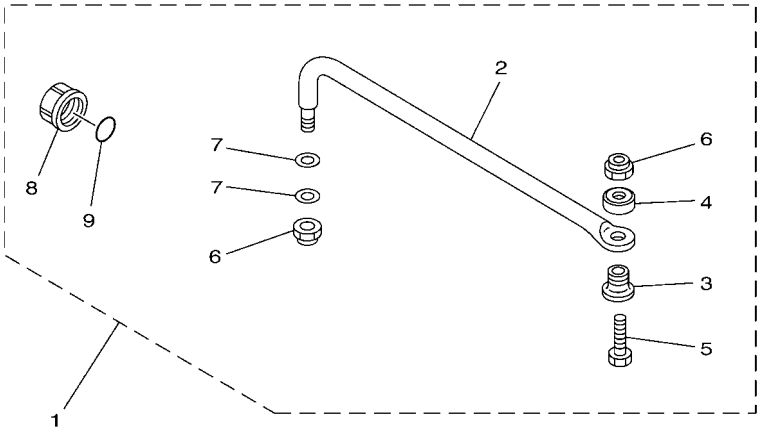

601R10R-Q670

FIG. 67 STEERING GUIDE 9

REF. NO.	PART NO.	DESCRIPTION	601R					REMARKS
1	6E5–61350–02	STEERING GUIDE ATTACHMENT KIT	1					
2	6E5–61351–01	.ROD, STEERING LINK	1					
3	90387–10M61	.COLLAR	1					
4	90560–12M01	.SPACER	1					
5	6E5–61355–00	.BOLT	1					
6	90185–09M01	.NUT, SELF-LOCKING	2					
7	90201–10M20	.WASHER, PLATE	2					
8	6E5–43145–01	.CAP, CLAMP BRACKET	1					
9	93210–16275	.O-RING	1					

Part No.	Applicable model
6E5-61301-01	40 and larger, F30 – F300 (V6)

Twin engine tie-bar kit
Adjustable distance : 600 mm (23.6 in.) – 800 mm (31.5 in.)

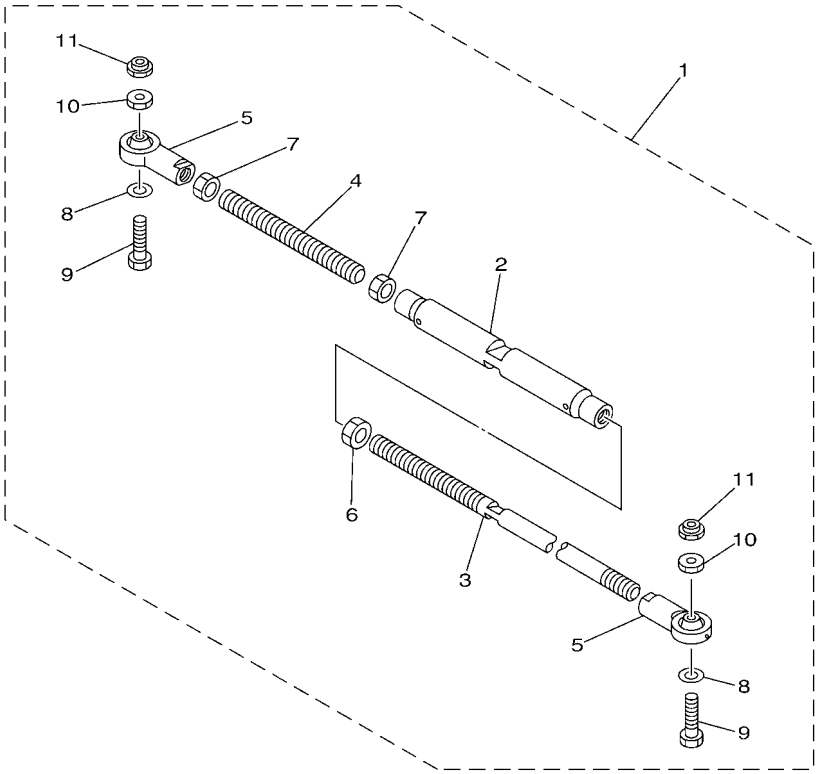

601R10R-P680

FIG. 68 STEERING GUIDE 10

REF. NO.	PART NO.	DESCRIPTION	601R					REMARKS
1	6E5–61301–01	TWIN KIT (L:600-800MM)	1					
2	6E5–61313–00	.ADJUSTER	1					
3	6E5–61311–11	.TIE BAR	1					
4	6E5–61315–00	.TIE BAR	1					
5	6E5–61303–00	.STEERING AXLE COMP.	2					
6	90170–14M06	.NUT	1					
7	95380–14700	.NUT	2					
8	90201–10M76	.WASHER, PLATE	2					
9	90101–09M70	.BOLT	2					
10	90170–09M05	.NUT	2					
11	90185–09M01	.NUT, SELF-LOCKING	2					

Part No.	Applicable model
6BG-61350-00	F20D, F25D (F25A), FT25F (T25A) F30B (F30A), F40F (F40A)

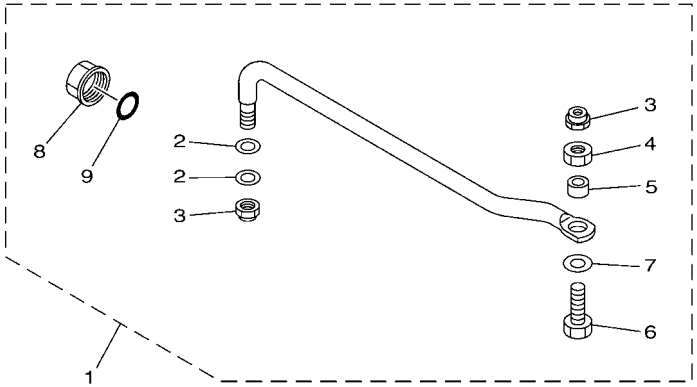

601R10R-Q690

FIG. 69 STEERING GUIDE 11

REF. NO.	PART NO.	DESCRIPTION	601R					REMARKS
1	6BG–61350–00	STEERING GUIDE ATTACHMENT KIT	1					
2	90201–10M20	.WASHER, PLATE	2					
3	90185–09M01	.NUT, SELF-LOCKING	2					
4	90170–09M03	.NUT	1					
5	90387–10M42	.COLLAR	1					
6	90101–09M01	.BOLT	1					
7	90201–10M63	.WASHER, PLATE	1					
8	6E5–43145–01	.CAP, CLAMP BRACKET	1					
9	93210–16275	.O-RING	1					

Part No.	Applicable model
6EK-61350-00	F115B(F115B), VF115A, F130A

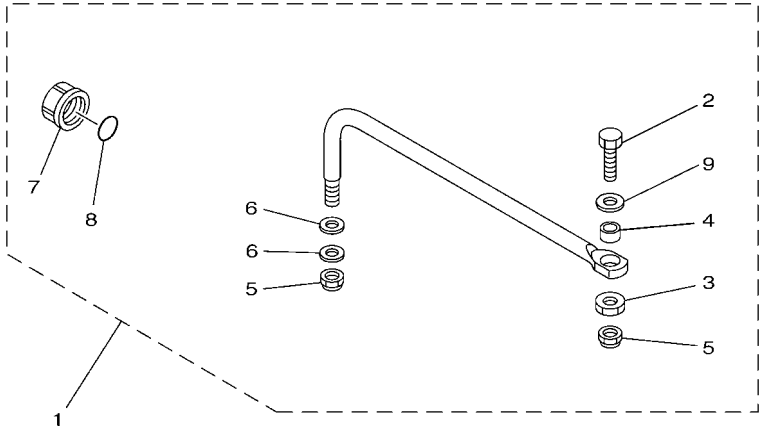

601R10R-P700

FIG. 70 STEERING GUIDE 12

REF. NO.	PART NO.	DESCRIPTION	601R					REMARKS
1	6EK–61350–00	STEERING GUIDE ATTACHMENT KIT	1					
2	6E5–61355–00	.BOLT	1					
3	90170–09M03	.NUT	1					
4	90387–10M42	.COLLAR	1					
5	90185–09M01	.NUT, SELF-LOCKING	2					
6	90201–10M20	.WASHER, PLATE	2					
7	6E5–43145–01	.CAP, CLAMP BRACKET	1					
8	93210–16275	.O-RING	1					
9	90201–10M63	.WASHER, PLATE	1					

PART NO.	REF. NO.
6BL–14571–10	55 – 25
65W–26326–10	52 – 10
6G8–26363–00	49 – 15
	51 – 15
6G8–26364–00	49 – 16
	51 – 16
6BL–41211–00	55 – 24
682–41237–00	50 – 3
682–41238–01	50 – 2
6J8–41262–00	55 – 22
65W–41283–00	55 – 21
6BL–41638–00	55 – 19
656–42153–10–4D	50 – 6
63V–42154–00	48 – 11
6L2–42154–01	49 – 6
69S–42157–10	50 – 5
6J8–42169–01	51 – 8
6L2–42191–01	49 – 7
63V–42192–00	48 – 15
6L2–42192–20	49 – 8
6J8–42723–51	51 – 17
6AH–42724–10	54 – 2
6J8–42724–10	51 – 19
68T–42725–10	53 – 18
6DR–42725–10	53 – 17
66T–42725–30	52 – 9
65W–42726–10	52 – 11
	54 – 4
	55 – 4
6BL–42727–00	55 – 3
6BL–42761–00	55 – 2
6DR–42761–10	53 – 16
6X4–42821–00	10 – 53
6J8–42846–00	51 – 18
6E5–43145–01	59 – 8
	60 – 8
	61 – 8
	62 – 9
	63 – 9
	64 – 9
	65 – 9
	66 – 8
	67 – 8
	69 – 8
	70 – 7
6AU–44111–10	53 – 8
6BL–44125–00	55 – 9
66T–44125–01	52 – 6

PART NO.	REF. NO.
6J8–44173–02	51 – 7
6J8–44177–00	51 – 5
703–44189–20	4 – 36
	5 – 36
	6 – 36
703–44189–30	4 – 42
	5 – 42
	6 – 41
6X3–44191–00	4 – 47
	5 – 47
	6 – 46
	9 – 73
6X6–44191–00	16 – 61
	17 – 68
	18 – 68
	19 – 57
6X7–44191–00	22 – 16
6BL–44192–00	55 – 13
6AH–44194–00	57 – 9
6X3–48111–00	9 – 58
6X0–48116–00	9 – 72
6X6–48118–00	16 – 35
	17 – 41
	18 – 41
	19 – 40
	22 – 40
6X7–48119–00	22 – 12
6X5–48119–01	10 – 61
6X6–48119–04	16 – 12
6X6–48119–10	17 – 13
	18 – 13
	19 – 13
6X5–48119–11	10 – 60
704–48119–31	7 – 59
704–48119–41	8 – 68
6X0–48121–00	9 – 37
6X0–48127–00	9 – 53
6X5–48127–00	10 – 34
6X7–48127–00	18 – 86
	19 – 71
	22 – 43
EL8–48127–00	7 – 23
	8 – 23
	9 – 23
	16 – 11
	17 – 12
	18 – 12
	19 – 12

PART NO.	REF. NO.
EL8–48127–00	22 – 44
6X6–48127–01	16 – 64
	17 – 71
	18 – 71
	19 – 60
6X5–48127–10	10 – 39
6X5–48127–20	10 – 41
6X0–48128–00	9 – 64
	18 – 87
	19 – 72
	22 – 60
6X6–48128–00	16 – 65
	17 – 72
	18 – 72
	19 – 61
	22 – 11
6X7–48128–00	22 – 67
703–48128–00	10 – 35
704–48128–00	8 – 62
703–48128–10	4 – 39
	5 – 39
	6 – 39
6X3–48129–00	9 – 67
6X5–48129–00	10 – 36
703–48129–00	4 – 41
	5 – 41
	9 – 15
	10 – 42
704–48129–00	7 – 2
	8 – 2
6X6–48129–01	16 – 60
	17 – 67
	18 – 67
	19 – 56
6X0–48138–00	9 – 4
703–48138–00	6 – 47
6X5–48144–00	10 – 29
6X6–48144–00	16 – 59
6X5–48144–10	10 – 28
6X6–48144–10	16 – 26
	17 – 31
	18 – 31
	19 – 30
704–48144–10	7 – 50
704–48144–20	8 – 50
6X5–48152–00	10 – 6
703–48152–10	4 – 6
	5 – 6

PART NO.	REF. NO.
703–48152–10	6 – 6
6X0–48153–00	9 – 47
703–48153–00	4 – 61
	5 – 61
	6 – 53
	10 – 22
704–48153–00	7 – 55
	8 – 55
6X0–48155–00	9 – 60
6X0–48156–00	9 – 65
	10 – 44
	22 – 65
704–48156–00	8 – 63
	17 – 48
	18 – 48
	19 – 47
6X6–48158–00	16 – 38
	17 – 44
	18 – 44
	19 – 43
	22 – 33
EL8–48158–00	9 – 30
EL8–48164–00	7 – 41
	8 – 41
	9 – 38
704–48166–00	7 – 56
	8 – 56
6X6–48167–00	16 – 16
6X7–48167–00	22 – 14
704–48167–01	7 – 61
6X6–48167–10	17 – 17
	18 – 17
	19 – 17
6X7–48167–10	22 – 13
704–48167–11	8 – 69
6X6–48167–20	17 – 18
	18 – 18
	19 – 18
6X6–48167–50	16 – 17
6X6–48167–60	17 – 19
	18 – 19
	19 – 19
6X6–48171–00	16 – 9
	17 – 10
	18 – 10
	19 – 10
	22 – 9
6X5–48175–00	10 – 71

PART NO.	REF. NO.
6X5–48176–00	10 – 65
6X6–48176–00	16 – 21
704–48176–00	7 – 51
6X6–48176–10	17 – 24
	18 – 24
	19 – 24
6X7–48176–10	22 – 68
704–48176–10	8 – 51
6X6–48176–50	16 – 62
	17 – 69
	18 – 69
	19 – 58
6X6–48176–60	16 – 63
	17 – 70
	18 – 70
	19 – 59
704–48178–00	8 – 66
	9 – 34
704–48178–10	7 – 60
6X0–48187–00	9 – 11
6X6–48189–00	16 – 32
	17 – 38
	18 – 38
	19 – 37
6X7–48189–00	22 – 20
703–48189–00	4 – 19
	5 – 19
	6 – 19
	10 – 19
EL8–48191–00	7 – 16
	8 – 16
	9 – 19
703–48192–00	9 – 44
704–48192–00	7 – 44
	8 – 44
704–48192–P0	7 – 52
	8 – 52
6X0–48193–00	9 – 63
6X6–48193–00	16 – 34
	17 – 40
	18 – 40
	19 – 39
	22 – 39
704–48193–00	9 – 42
703–48198–00	4 – 16
	5 – 16
	6 – 16
	10 – 16

PART NO.	REF. NO.
703–48198–00	16 – 33
	17 – 39
	18 – 39
	19 – 38
	22 – 38
6X7–481A0–01	22 – 18
6X6–481A0–02	16 – 24
	17 – 29
6X6–481A0–12	18 – 29
	19 – 28
6X6–481A0–22	17 – 76
6X6–481A0–32	18 – 78
	19 – 64
703–48201–21	1 – 1
	5 – 1
703–48201–B1	1 – 1
	5 – 1
703–48203–21	1 – 1
	5 – 1
704–48203–P1	2 – 1
	7 – 1
703–48205–21	1 – 1
	5 – 1
6X6–48205–37	12 – 1
	16 – 1
6X6–48205–47	12 – 1
	16 – 1
6X6–48205–56	12 – 1
	16 – 1
703–48205–B1	1 – 1
	5 – 1
704–48205–P1	2 – 1
	7 – 1
6X3–48206–02	3 – 1
	9 – 1
6X7–48206–13	21 – 1
	22 – 1
703–48206–20	1 – 2
	6 – 1
704–48206–P1	2 – 1
	7 – 1
6X5–48207–02	3 – 2
	10 – 1
703–48207–21	1 – 1
	5 – 1
6X6–48207–37	13 – 1
	17 – 1
6X6–48207–47	13 – 1

PART NO.	REF. NO.
6X6–48207–47	17 – 1
6X6–48207–56	13 – 1
	17 – 1
704–48207–P1	2 – 2
	8 – 1
6X6–48208–47	14 – 1
	18 – 1
6X6–48208–56	14 – 1
	18 – 1
6X6–48209–07	15 – 1
	19 – 1
6X6–48209–16	15 – 1
	19 – 1
703–48210–21	1 – 1
	4 – 1
6X0–48211–00	9 – 25
6X6–48211–10	18 – 80
	19 – 65
	22 – 54
703–48211–10	4 – 25
	5 – 25
	6 – 25
6X6–48212–00	16 – 25
	17 – 30
	18 – 30
	19 – 29
6X7–48212–00	22 – 19
EL8–48212–00	9 – 74
703–48212–10	4 – 26
	5 – 26
	6 – 26
6X5–48213–00	10 – 58
6X6–48213–00	16 – 43
	17 – 51
	18 – 51
	19 – 50
EL8–48213–00	9 – 75
703–48213–10	4 – 27
	5 – 27
	6 – 27
6X5–48214–00	10 – 63
6X5–48214–10	10 – 64
6X5–48215–00	10 – 80
6X5–48215–10	10 – 81
6X7–48215–10	22 – 17
703–48215–10	4 – 46
	5 – 46
	6 – 45
704–48215–21	7 – 12
6X6–48215–30	16 – 13
704–48215–30	8 – 12
6X6–48215–40	17 – 15
6X6–48215–50	18 – 15
6X6–48215–70	19 – 15
6X6–48216–00	16 – 14
6X6–48216–10	17 – 16
	19 – 16
6X6–48216–20	18 – 16
6X5–48219–00	10 – 67
6X6–48219–00	16 – 18
6X6–48219–10	17 – 20
	18 – 20
	19 – 20
703–48219–10	4 – 34
	5 – 34
	6 – 34
6X6–48219–20	17 – 21
	18 – 21
	19 – 21
704–48219–P0	7 – 49
	8 – 49
6X3–48221–00	9 – 55
6X5–48221–00	10 – 26
6X6–48221–00	16 – 3
	17 – 3
	18 – 3
	19 – 3
6X7–48221–00	22 – 3
6X5–48221–10	10 – 27
703–48221–10	4 – 28
	5 – 28
	6 – 28
704–48221–P0	7 – 58
	8 – 67
6X6–48222–00	16 – 4
	17 – 4
	18 – 4
	19 – 4
6X7–48222–00	22 – 4
6X3–48222–01	9 – 48
6X5–48222–01	10 – 31
6X6–48222–10	17 – 6
	18 – 6
	19 – 6
6X5–48222–11	10 – 33
703–48222–20	4 – 31
703–48222–20	5 – 31
6X5–48222–21	10 – 66
6X5–48222–21	10 – 85
703–48222–30	4 – 31
	5 – 31
	6 – 31
704–48222–P0	7 – 32
	8 – 32
6X0–48223–00	9 – 54
6X7–48223–00	22 – 6
703–48223–10	4 – 32
	5 – 32
	6 – 32
6X5–48224–00	10 – 13
6X6–48224–00	16 – 5
	17 – 5
	18 – 5
	19 – 5
6X7–48224–00	22 – 5
6X6–48224–10	16 – 6
	17 – 7
	18 – 7
	19 – 7
6X7–48224–10	22 – 7
6X3–48225–00	9 – 57
6X5–48225–00	10 – 68
6X6–48225–00	17 – 25
	18 – 25
	19 – 25
6X7–48225–00	22 – 15
6X3–48225–10	9 – 56
703–48225–10	4 – 33
	5 – 33
	6 – 33
6X3–48225–20	7 – 43
	8 – 43
	9 – 59
703–48227–00	4 – 30
	5 – 30
	6 – 30
	9 – 49
	22 – 8
6X5–48228–00	10 – 73
6X7–48228–00	22 – 25
6X6–48228–01	16 – 44
	17 – 52
	18 – 52
	19 – 51
6X5–48229–01	10 – 30
6X5–48229–11	10 – 32
704–48229–P1	7 – 35
	8 – 35
704–48229–R0	7 – 35
	8 – 60
703–48230–21	1 – 1
	4 – 1
704–48231–00	7 – 25
	8 – 25
EL8–48231–00	9 – 26
6X5–48232–00	10 – 2
703–48232–00	4 – 2
	5 – 2
	6 – 2
704–48232–P1	7 – 40
	8 – 40
6X7–48233–00	22 – 23
704–48233–00	7 – 53
	8 – 53
EL8–48233–00	9 – 45
6X6–48233–01	16 – 28
	17 – 34
	18 – 34
	19 – 33
6X6–48234–00	16 – 36
	17 – 42
	18 – 42
	19 – 41
	22 – 37
703–48234–00	4 – 20
	5 – 20
	6 – 20
	10 – 20
704–48234–00	7 – 48
	8 – 48
EL8–48234–00	9 – 43
702–48235–00	9 – 46
703–48235–00	4 – 5
	5 – 5
	6 – 5
	10 – 5
704–48235–00	7 – 54
	8 – 54
6X6–48236–00	16 – 31
	17 – 37
	18 – 37
	19 – 36
6X6–48236–00	22 – 34
703–48236–00	4 – 18
	5 – 18
	6 – 18
	10 – 18
6X6–48237–00	16 – 30
	17 – 36
	18 – 36
	19 – 35
	22 – 35
6X6–48238–00	16 – 29
	17 – 35
	18 – 35
	19 – 34
	22 – 36
703–48238–00	4 – 24
	5 – 24
	6 – 24
	10 – 24
704–48238–00	7 – 39
	8 – 39
	9 – 36
6X6–48241–00	16 – 69
	17 – 79
	18 – 90
	19 – 75
	22 – 29
EL8–48241–00	7 – 26
	8 – 26
	9 – 27
6X7–48242–00	22 – 24
6X6–48242–02	16 – 27
	17 – 32
	18 – 32
	19 – 31
704–48242–10	7 – 42
	8 – 42
EL8–48242–10	9 – 39
6X6–48242–12	17 – 33
	18 – 33
	19 – 32
703–48243–00	4 – 17
	5 – 17
	6 – 17
	10 – 17
703–48244–00	4 – 23
	5 – 23
	6 – 23
703–48244–00	10 – 23
EL8–48244–00	7 – 30
	8 – 30
	9 – 32
703–48245–00	4 – 13
	5 – 13
	6 – 13
EL8–48245–00	7 – 31
	8 – 31
	9 – 33
6X6–48245–01	16 – 70
	17 – 80
	18 – 91
	19 – 76
	22 – 28
6X5–48246–00	10 – 62
701–48246–00	7 – 5
	8 – 5
703–48246–00	4 – 29
	5 – 29
	6 – 29
	10 – 74
701–48248–00	4 – 15
	5 – 15
	6 – 15
	7 – 38
	8 – 38
	9 – 35
	10 – 15
703–48250–21	1 – 1
	4 – 1
EL8–48251–00	7 – 3
	8 – 3
	9 – 2
703–48252–00	4 – 14
	5 – 14
	6 – 14
	10 – 14
EL8–48254–00	7 – 27
	8 – 27
	9 – 28
EL8–48259–00	7 – 7
	8 – 7
	9 – 7
703–48260–20	1 – 2
	6 – 1
6X0–48261–00	9 – 18
6X5–48261–00	10 – 4

PART NO.	REF. NO.
704–48261–00	7 – 15
	8 – 15
703–48261–01	5 – 4
	6 – 4
703–48261–11	4 – 4
	6 – 4
6X0–48262–00	9 – 9
704–48262–00	7 – 8
	8 – 8
702–48263–00	9 – 40
6X0–48264–00	9 – 10
6X5–48264–00	10 – 8
6X6–48264–00	16 – 39
	17 – 45
	18 – 45
	19 – 44
	22 – 30
703–48264–00	4 – 8
	5 – 8
	6 – 8
704–48264–00	7 – 9
	8 – 9
6X0–48265–00	9 – 8
6X5–48265–00	10 – 11
703–48265–00	6 – 11
704–48265–00	7 – 4
	8 – 4
703–48265–10	4 – 11
	5 – 11
704–48266–00	9 – 13
6X5–48267–00	10 – 43
	10 – 83
6X6–48267–00	16 – 37
	17 – 43
	18 – 43
	19 – 42
	22 – 31
6X6–48267–C0	16 – 23
	17 – 28
	18 – 28
	19 – 27
703–48268–00	4 – 7
	5 – 7
	6 – 7
	10 – 7
6X5–48271–00	10 – 3
703–48271–00	4 – 3
	5 – 3

PART NO.	REF. NO.
703–48271–00	6 – 3
704–48271–00	7 – 22
	8 – 22
EL8–48271–00	9 – 22
703–48272–21	1 – 1
	4 – 1
EL8–48279–00	7 – 47
	8 – 47
	9 – 41
6X0–48281–00	9 – 62
703–48281–00	4 – 35
	5 – 35
	6 – 35
704–48281–00	7 – 13
	8 – 13
	9 – 70
EL8–48281–00	7 – 11
	8 – 11
	9 – 16
704–48283–00	7 – 17
	8 – 17
	17 – 49
	18 – 49
	19 – 48
703–48284–00	4 – 58
	5 – 58
703–48284–10	4 – 58
	5 – 58
703–48284–20	6 – 50
704–48284–P0	7 – 57
	8 – 57
704–48285–10	8 – 65
701–48287–00	4 – 45
	5 – 45
	6 – 44
	9 – 66
	22 – 66
704–48287–00	7 – 20
	8 – 20
	10 – 46
	16 – 40
	17 – 46
	18 – 46
	19 – 45
	22 – 32
6X0–48288–00	9 – 52
703–48290–01	1 – 3
6X5–48293–00	10 – 87

PART NO.	REF. NO.
703–48293–10	4 – 44
	5 – 44
	6 – 43
704–48293–20	2 – 3
704–48293–30	2 – 6
701–48310–10	11 – 1
701–48310–20	11 – 1
701–48310–40	11 – 1
701–48310–60	11 – 1
701–48310–80	11 – 1
701–48310–90	11 – 1
6X5–48317–00	10 – 76
6X5–48317–10	10 – 77
701–48320–00	11 – 1
701–48320–20	11 – 1
701–48320–30	11 – 1
701–48320–40	11 – 1
701–48320–50	11 – 1
701–48320–60	11 – 1
701–48320–70	11 – 1
701–48320–80	11 – 1
701–48320–90	11 – 1
647–48330–50	47 – 10
648–48330–50	50 – 21
617–48331–91	47 – 14
	50 – 22
6X5–48338–00	10 – 78
6X5–48338–10	10 – 79
647–48340–50	47 – 16
648–48340–50	50 – 15
663–48344–00	48 – 8
	52 – 2
	53 – 12
	53 – 14
	54 – 12
	54 – 16
	55 – 17
	55 – 29
703–48345–01	4 – 21
	5 – 21
	6 – 21
	7 – 19
	8 – 19
	9 – 21
	10 – 21
647–48346–50	47 – 17
648–48346–50	50 – 23
617–48346–90	47 – 11

PART NO.	REF. NO.
617–48346–90	50 – 17
701–48350–00	11 – 1
701–48350–10	11 – 1
701–48350–20	11 – 1
701–48350–30	11 – 1
701–48350–40	11 – 1
701–48350–50	11 – 1
701–48350–60	11 – 1
701–48350–70	11 – 1
6X5–48351–00	10 – 54
6X5–48354–00	10 – 59
6X5–48358–00	10 – 25
703–48358–00	4 – 22
	5 – 22
	6 – 22
	7 – 24
	8 – 24
	9 – 24
617–48361–91	47 – 20
	50 – 16
63V–48501–00	48 – 1
69R–48501–00	50 – 1
6AH–48501–00	54 – 1
6BL–48501–00	55 – 1
6DR–48501–00	53 – 1
66T–48501–01	52 – 1
655–48501–02	47 – 1
6J8–48501–03–4D	51 – 1
655–48501–10	47 – 1
69R–48501–10	50 – 1
6J8–48501–11	51 – 1
6L2–48501–11	49 – 1
700–48510–12	47 – 22
	50 – 27
	58 – 13
6G8–48511–00	58 – 14
6L2–48511–00	56 – 1
63D–48511–01	56 – 11
63V–48511–01	57 – 1
65W–48511–01	52 – 7
	55 – 7
	57 – 10
67F–48511–01	57 – 11
68V–48511–01	57 – 14
6AH–48511–01	57 – 5
6J8–48511–01–8D	58 – 8
676–48511–02	56 – 6
689–48511–02	50 – 28

PART NO.	REF. NO.
689–48511–02	58 – 9
676–48511–10	47 – 23
	58 – 1
69G–48511–10	58 – 17
6G8–48511–10	58 – 5
688–48511–12	56 – 12
6J8–48511–52	56 – 5
63V–48531–00	48 – 2
68T–48531–00	53 – 2
6AH–48531–00	54 – 14
6J8–48531–00	51 – 9
6L2–48531–00	49 – 11
655–48531–51	47 – 2
689–48531–51	50 – 13
6AH–48532–00	54 – 7
6J8–48532–00	51 – 10
689–48532–51	50 – 11
63V–48534–00	48 – 18
6J8–48534–00	51 – 3
6L2–48534–01	49 – 3
647–48534–50	47 – 5
648–48534–50–4D	50 – 9
6BL–48538–00	55 – 8
6H3–48538–00	52 – 4
682–48538–50	48 – 3
	49 – 12
	51 – 11
	53 – 3
	54 – 9
63V–48544–00	48 – 20
6L2–48544–01	49 – 2
6J8–48544–02	51 – 4
6E5–61301–01	68 – 1
6E5–61303–00	68 – 5
6E5–61311–11	68 – 3
6E5–61313–00	68 – 2
6E5–61315–00	68 – 4
63D–61350–00	63 – 1
63V–61350–00	59 – 1
65W–61350–00	64 – 1
67F–61350–00	66 – 1
697–61350–00	65 – 1
6AH–61350–00	61 – 1
6BG–61350–00	69 – 1
6EK–61350–00	70 – 1
689–61350–02	62 – 1
6E5–61350–02	67 – 1
688–61350–10	65 – 1

PART NO.	REF. NO.
68T–61350–10	60 – 1
63D–61351–00	63 – 2
65W–61351–00	64 – 2
697–61351–00	65 – 2
689–61351–01	62 – 2
6E5–61351–01	67 – 2
688–61351–10	65 – 2
6E5–61355–00	59 – 6
	60 – 6
	61 – 6
	62 – 7
	65 – 8
	67 – 5
	70 – 2
6X6–81145–01	16 – 41
	17 – 74
	18 – 74
	19 – 63
6X6–81146–01	16 – 66
	17 – 73
	18 – 73
	19 – 62
6X6–81147–00	16 – 42
	17 – 50
	18 – 50
	19 – 49
68V–81950–00	30 – 9
	33 – 12
	37 – 13
	37 – 26
	38 – 13
	38 – 26
704–81950–10	8 – 58
	10 – 72
	16 – 67
	17 – 77
	18 – 88
	19 – 73
	22 – 53
6X3–81971–00	42 – 1
6X3–81971–10	42 – 2
6K1–81980–00	28 – 18
6X6–81980–00	31 – 8
	32 – 6
	34 – 8
	35 – 6
	39 – 6
	39 – 12

PART NO.	REF. NO.
6X6–81980–10	36 – 6
6X6–81980–20	45 – 25
688–82388–00	42 – 5
6X5–82507–00	33 – 11
6X6–82507–00	37 – 12
6Y8–82507–00	30 – 10
6X6–82507–10	37 – 25
6X6–82507–20	38 – 12
6X6–82507–30	38 – 25
6X6–82510–01	26 – 3
61B–82510–02	29 – 4
6X5–82510–02	33 – 2
6R5–82510–03	24 – 4
6Y8–82510–03	30 – 3
64D–82510–04	40 – 4
6K1–82510–07	28 – 3
704–82510–0A	23 – 4
	25 – 2
	41 – 1
6X6–82510–10	31 – 3
703–82510–13	5 – 48
6X6–82510–20	34 – 3
64D–82510–21	40 – 4
6X6–82510–30	37 – 4
	37 – 17
	38 – 4
	38 – 17
703–82510–34	4 – 48
	5 – 48
703–82510–44	4 – 48
	5 – 48
6X6–8252S–00	18 – 83
	19 – 68
	22 – 57
6X6–8252V–00	16 – 72
	17 – 82
	18 – 93
	19 – 78
	22 – 42
703–82531–00	4 – 51
	5 – 51
6K1–82532–00	4 – 50
	5 – 50
	23 – 6
	25 – 4
	28 – 5
	40 – 6
	41 – 3

PART NO.	REF. NO.
703–82532–00	5 – 50
	24 – 6
	26 – 4
	29 – 6
	30 – 5
	31 – 4
	33 – 4
	34 – 4
	37 – 6
	37 – 19
	38 – 6
	38 – 19
6X5–82540–00	10 – 47
6X6–82540–00	16 – 68
	17 – 78
	18 – 89
	19 – 74
	22 – 27
703–82540–00	4 – 55
	5 – 55
704–82540–00	9 – 14
6X6–82540–10	17 – 83
	18 – 94
	19 – 79
704–82540–20	7 – 10
704–82540–30	8 – 10
704–82541–10	9 – 71
6X6–82545–00	16 – 71
	17 – 81
	18 – 92
	19 – 77
6X7–82545–00	22 – 26
682–82556–00	4 – 53
	5 – 53
	6 – 49
	9 – 69
	23 – 8
	24 – 8
	25 – 6
	26 – 6
	28 – 7
	29 – 8
	30 – 7
	31 – 6
	33 – 6
	34 – 6
	36 – 3
	40 – 20

PART NO.	REF. NO.
682–82556–00	41 – 11
	41 – 13
	42 – 3
6X6–82556–00	38 – 30
	39 – 16
6X7–82563–00	22 – 2
6X3–82563–01	9 – 51
6X5–82563–01	10 – 48
6X6–82563–01	16 – 2
	17 – 2
	18 – 2
	19 – 2
688–82563–10	42 – 4
6X5–82563–11	10 – 49
703–82563–20	4 – 57
	5 – 57
6X5–82563–21	10 – 50
703–82563–30	4 – 57
	5 – 57
6X5–82563–31	10 – 51
6X6–82563–40	17 – 26
	18 – 26
704–82563–41	7 – 34
6X6–82563–50	17 – 75
	18 – 75
704–82563–51	8 – 34
6X6–82563–60	18 – 76
704–82563–H1	8 – 61
704–82563–J1	8 – 64
6X5–82570–02	33 – 1
6Y8–82570–04	30 – 1
64D–82570–05	40 – 1
61B–82570–06	29 – 1
6R5–82570–07	24 – 1
64D–82570–11	40 – 16
704–82570–12	23 – 1
6K1–82570–13	28 – 1
64D–82570–22	21 – 2
	40 – 1
64D–82570–31	40 – 16
6X6–82570–33	12 – 2
	26 – 1
6X6–82570–40	13 – 2
	31 – 1
6X6–82570–50	14 – 2
	34 – 1
6X6–82570–60	13 – 3
	31 – 9

PART NO.	REF. NO.
6X6–82570–70	14 – 3
	34 – 9
6X6–82570–80	12 – 3
	27 – 1
6X6–82570–90	12 – 4
	13 – 5
	14 – 5
	36 – 1
6X6–82570–B0	12 – 5
	13 – 6
	14 – 6
	36 – 4
6X6–82570–C0	45 – 22
6X6–82570–E0	13 – 4
	32 – 1
6X6–82570–F0	14 – 4
	35 – 1
6X6–82570–J0	15 – 7
	39 – 1
6X6–82570–K0	15 – 8
	39 – 7
6X6–82570–L0	15 – 9
	38 – 31
	39 – 17
6X6–82570–N1	20 – 20
6X6–82570–R2	15 – 2
	37 – 1
6X6–82570–S2	15 – 3
	37 – 14
6X6–82570–T2	15 – 4
	38 – 1
6X6–82570–U2	15 – 5
	38 – 14
6X6–82570–V0	15 – 6
	38 – 27
	39 – 13
64D–82571–00	37 – 2
	37 – 15
	38 – 2
	38 – 15
	40 – 2
6X5–82571–00	33 – 7
6X6–82571–00	26 – 2
6Y8–82571–01	30 – 2
6K1–82571–02	28 – 2
	29 – 2
704–82571–02	23 – 2
	24 – 2

PART NO.	REF. NO.
64D–82571–10	40 – 17
6X6–82571–10	31 – 2
	34 – 2
6X6–82571–20	31 – 10
	32 – 2
6X6–82571–30	34 – 10
	35 – 2
6X6–82571–40	27 – 2
6X6–82571–50	36 – 2
	38 – 29
	39 – 15
6X6–82571–60	45 – 23
6X6–82571–70	36 – 5
	38 – 32
	39 – 18
6X6–82571–80	39 – 3
6X6–82571–90	39 – 9
6X5–82575–00	33 – 5
64D–82575–01	40 – 19
6K1–82575–01	28 – 6
	29 – 7
	30 – 6
6X3–82575–01	9 – 68
6X7–82575–01	22 – 45
688–82575–02	4 – 52
	5 – 52
	23 – 7
	24 – 7
	25 – 5
6X6–82575–10	31 – 5
	34 – 5
64D–82575–11	40 – 19
	41 – 12
688–82575–12	26 – 5
	41 – 10
6X6–82575–30	38 – 28
	39 – 14
701–82575–53	6 – 48
703–82577–00	4 – 49
	5 – 49
	23 – 5
	25 – 3
	28 – 4
	40 – 5
	41 – 2
676–82577–01	5 – 49
	24 – 5
	29 – 5

PART NO.	REF. NO.
676–82577–01	30 – 4
	33 – 3
	37 – 5
	37 – 18
	38 – 5
	38 – 18
6X3–8257B–01	41 – 4
704–8257C–03	25 – 1
6X6–8257Y–00	20 – 17
6X6–8257Y–70	16 – 56
	17 – 64
	18 – 64
	45 – 8
	45 – 18
6X6–82580–00	16 – 49
	45 – 1
6X6–82580–10	17 – 57
	45 – 11
6X6–82580–20	18 – 57
6X6–82580–30	20 – 1
6X6–82580–40	16 – 49
6X6–82580–50	17 – 57
6X6–82580–60	18 – 57
6X6–82580–70	20 – 1
6X6–82580–80	16 – 49
6X6–82580–90	17 – 57
64D–82581–00	23 – 9
	24 – 9
	25 – 7
	30 – 11
	37 – 7
	37 – 20
	38 – 7
	38 – 20
	40 – 7
	41 – 5
6X5–82581–00	33 – 9
6X6–82581–00	18 – 85
	19 – 70
	22 – 59
6Y8–82582–11	16 – 57
	17 – 65
	18 – 65
	20 – 8
	20 – 18
	22 – 50
	45 – 9
	45 – 19

PART NO.	REF. NO.
6X6–82582–40	16 – 52
	17 – 60
	18 – 60
	20 – 4
	20 – 13
	45 – 4
	45 – 14
6X6–82582–60	16 – 51
	17 – 59
	18 – 59
	20 – 3
	20 – 12
	45 – 3
	45 – 13
6X6–82582–A0	16 – 53
	17 – 61
	18 – 61
	20 – 5
	20 – 14
	22 – 48
	45 – 5
	45 – 15
6X6–82582–C0	16 – 54
	17 – 62
	18 – 62
	20 – 6
	20 – 15
	45 – 6
	45 – 16
6X6–82584–00	18 – 84
	19 – 69
	22 – 58
6X6–82585–00	16 – 58
	17 – 66
	18 – 66
	20 – 9
	20 – 19
	45 – 10
	45 – 20
6X6–82585–20	16 – 50
	17 – 58
	18 – 58
	20 – 2
	20 – 11
	22 – 47
	45 – 2
	45 – 12
6X6–82585–60	16 – 55

PART NO.	REF. NO.
6X6–82585–60	22 – 49
	45 – 7
6X6–82585–70	17 – 63
	18 – 63
	20 – 7
	20 – 16
	45 – 17
688–82586–11	43 – 4
688–82586–21	4 – 54
	5 – 54
688–82586–31	43 – 4
688–82586–50	43 – 1
64D–82588–00	37 – 3
	37 – 16
	38 – 3
	38 – 16
	40 – 3
61B–82588–01	29 – 3
6R5–82588–01	23 – 3
	24 – 3
64D–82588–10	40 – 18
6X6–8258A–00	44 – 1
	44 – 1
	44 – 1
	44 – 1
703–8258A–00	43 – 3
61B–8258A–01	43 – 2
688–8258A–10	43 – 5
6X6–8258A–10	44 – 1
	44 – 1
	44 – 1
	44 – 1
688–8258A–20	4 – 54
	5 – 54
6X6–8258A–20	44 – 1
	44 – 1
	44 – 1
	44 – 1
688–8258A–30	43 – 5
6X6–8258A–30	44 – 1
	44 – 1
	44 – 1
	44 – 1
6K1–8258A–40	43 – 2
6X6–8258A–40	44 – 1
	44 – 1
	44 – 1
	44 – 1

PART NO.	REF. NO.
688–8258A–50	43 – 2
6X6–8258A–50	44 – 1
	44 – 1
	44 – 1
	44 – 1
688–8258A–60	43 – 2
6X6–8258A–60	44 – 1
	44 – 1
	44 – 1
	44 – 1
688–8258A–70	43 – 2
6X6–8258A–B1	44 – 3
	44 – 3
	44 – 3
6X6–8258A–D1	44 – 3
	44 – 3
	44 – 3
6X6–8258A–F1	44 – 3
	44 – 3
	44 – 3
6X6–8258A–G1	44 – 2
	44 – 2
	44 – 2
	44 – 2
6X6–8258A–H1	44 – 2
	44 – 2
	44 – 2
	44 – 2
6X6–8258A–J1	44 – 2
	44 – 2
	44 – 2
	44 – 2
6X6–8258A–K0	46 – 4
	46 – 4
	46 – 4
6X6–8258A–L0	38 – 33
6X6–8258A–M0	46 – 1
6X6–8258A–N0	46 – 2
6X6–8258A–P0	46 – 3
6X6–8258A–R0	44 – 4
6X6–8258A–S0	44 – 4
6X6–8258A–T0	44 – 4
6X6–8258A–U0	38 – 34
6X5–82590–00	10 – 82
704–82590–10	8 – 59
6X7–82590–20	22 – 51
6X7–82590–30	46 – 5
6X7–82590–40	22 – 46

PART NO.	REF. NO.
6X6–82590–K0	20 – 10
6X6–82590–M0	20 – 10
6X6–82591–00	18 – 82
	19 – 67
	22 – 56
703–82591–00	4 – 59
	5 – 59
	6 – 51
	10 – 52
	16 – 46
	17 – 54
	18 – 54
	19 – 53
	22 – 41
	45 – 21
	45 – 21
703–82591–10	16 – 73
	17 – 84
	18 – 95
	19 – 80
703–82592–00	4 – 60
	5 – 60
	6 – 52
704–82594–00	7 – 33
	8 – 33
6X6–8259E–00	16 – 19
	17 – 22
	18 – 22
	19 – 22
6X7–8259E–00	22 – 21
6X6–8259E–20	27 – 3
	31 – 11
	32 – 3
	34 – 11
	35 – 3
	39 – 2
	39 – 8
	45 – 24
6X6–8259F–10	18 – 77
6X6–82716–00	31 – 12
6X6–82716–10	34 – 12
6X6–82716–20	27 – 5
6X6–82716–40	32 – 5
	39 – 5
	39 – 11
6X6–82716–50	35 – 5
6R5–83383–00	24 – 13
	29 – 13

PART NO.	REF. NO.
6R5–83383–00	30 – 8
	41 – 9
6X4–83383–00	33 – 10
6X5–83383–00	33 – 8
703–83383–11	4 – 56
	5 – 56
688–83383–12	23 – 13
	25 – 11
	28 – 12
	37 – 11
	37 – 24
	38 – 11
	38 – 24
	40 – 11
703–83383–A0	26 – 7
	27 – 4
	31 – 7
	32 – 4
	34 – 7
	35 – 4
	39 – 4
	39 – 10
6K1–83614–01	28 – 8
	29 – 9
6AH–83773–00	54 – 5
6X6–84301–00	16 – 15
6X7–84301–00	22 – 22
6X6–84301–13	17 – 14
6X6–84301–23	18 – 14
6X6–84301–30	19 – 14
6D5–84340–00	54 – 19
	55 – 31
6X6–85557–00	18 – 81
	19 – 66
	22 – 55
6X6–85590–21	16 – 45
	17 – 53
	18 – 53
	19 – 52
	22 – 52
61B–85830–01	29 – 14
6K1–85830–02	28 – 13
90101–09M01	63 – 7
	64 – 7
	66 – 7
	69 – 6
90101–09M70	68 – 9
90105–06M23	49 – 14

PART NO.	REF. NO.
90109–06M29	51 – 13
90109–06M86	54 – 15
90116–10062	57 – 12
	57 – 15
90149–05M05	23 – 14
	24 – 14
	28 – 19
	29 – 19
	40 – 12
	40 – 21
90159–05M25	48 – 21
90170–09M03	59 – 4
	60 – 4
	61 – 4
	62 – 5
	63 – 5
	64 – 5
	65 – 5
	66 – 4
	69 – 4
	70 – 3
90170–09M05	68 – 10
90170–14M06	68 – 6
90179–06M24	51 – 14
90185–08057	57 – 4
	57 – 8
	58 – 20
90185–09M01	59 – 3
	60 – 3
	61 – 3
	62 – 4
	63 – 4
	64 – 4
	65 – 4
	66 – 3
	67 – 6
	68 – 11
	69 – 3
	70 – 5
90185–10027	47 – 26
	50 – 31
	55 – 6
	56 – 2
	57 – 13
	57 – 16
	58 – 4
	58 – 12
90201–04M06	48 – 16

PART NO.	REF. NO.
90201–05M06	55 – 14
90201–06M31	55 – 11
	55 – 26
90201–08M12	48 – 10
90201–10120	52 – 8
90201–10M02	48 – 14
90201–10M20	59 – 2
	60 – 2
	61 – 2
	62 – 3
	63 – 3
	64 – 3
	65 – 3
	66 – 2
	67 – 7
	69 – 2
	70 – 6
90201–10M63	59 – 7
	60 – 7
	61 – 7
	62 – 8
	63 – 8
	64 – 8
	65 – 7
	66 – 6
	69 – 7
	70 – 9
90201–10M76	68 – 8
90202–05088	49 – 9
90206–10M04	48 – 13
90254–03M03	51 – 6
90254–03M05	52 – 5
90386–10009	48 – 22
	49 – 4
	50 – 7
90386–10025	48 – 12
90387–06139	55 – 23
90387–06M86	55 – 10
90387–10M42	59 – 5
	60 – 5
	61 – 5
	62 – 6
	63 – 6
	64 – 6
	65 – 6
	66 – 5
	69 – 5
	70 – 4

PART NO.	REF. NO.
90387–10M61	67 – 3
90446–09M42	55 – 32
90465–11M10	54 – 3
90465–13M18	54 – 18
90468–10005	55 – 15
90468–18001	55 – 16
90468–18008	48 – 9
	52 – 3
	53 – 13
	53 – 15
	54 – 13
	54 – 17
	55 – 18
	55 – 30
90480–19031	54 – 8
90501–10071	47 – 13
	50 – 25
90501–10264	47 – 19
	50 – 19
90508–20040	55 – 20
90560–12M01	67 – 4
91490–20010	48 – 17
	49 – 10
91690–30012	47 – 15
	47 – 21
	48 – 4
	49 – 13
	50 – 18
	50 – 24
	51 – 12
	53 – 4
	54 – 10
91690–40018	50 – 8
92780–06020	7 – 28
	8 – 28
	9 – 29
92903–05100	23 – 11
	24 – 11
	24 – 16
	25 – 9
	30 – 13
	37 – 9
	37 – 22
	38 – 9
	38 – 22
	40 – 9
	41 – 7
92903–05600	24 – 17

PART NO.	REF. NO.
92990–05100	23 – 16
	28 – 10
	28 – 21
	29 – 11
	29 – 21
	40 – 14
	40 – 23
92990–05200	10 – 84
	16 – 20
	17 – 23
	18 – 23
	19 – 23
	22 – 63
92990–05300	7 – 36
	8 – 36
	9 – 61
	10 – 70
	16 – 8
	17 – 9
	18 – 9
	19 – 9
92990–05600	23 – 17
	28 – 22
	29 – 22
	40 – 15
	40 – 24
92990–06100	28 – 16
	29 – 17
92990–06300	7 – 46
	8 – 46
92990–06600	28 – 17
	29 – 18
92990–08100	51 – 2
92990–08200	10 – 38
92990–08600	4 – 38
	5 – 38
	6 – 38
	10 – 69
	16 – 10
	17 – 11
	18 – 11
	19 – 11
	22 – 10
	47 – 12
	47 – 18
	50 – 20
	50 – 26
92990–10100	56 – 8

PART NO.	REF. NO.
92990–10600	9 – 6
	47 – 25
	56 – 3
	56 – 9
	58 – 3
	58 – 11
92995–05600	47 – 7
	53 – 11
92995–06600	47 – 4
	48 – 6
	53 – 6
	58 – 7
	58 – 16
92995–08600	57 – 3
	57 – 7
	58 – 19
92995–10600	50 – 30
93210–12327	53 – 9
93210–16275	59 – 9
	60 – 9
	61 – 9
	62 – 10
	63 – 10
	64 – 10
	65 – 10
	66 – 9
	67 – 9
	69 – 9
	70 – 8
93430–06024	4 – 12
	5 – 12
	6 – 12
	7 – 6
	8 – 6
	9 – 5
	10 – 12
93700–06M03	55 – 5
95303–05600	24 – 15
95303–05700	23 – 12
	24 – 12
	25 – 10
	30 – 14
	37 – 10
	37 – 23
	38 – 10
	38 – 23
	40 – 10
	41 – 8

PART NO.	REF. NO.
95380–05600	4 – 9
	5 – 9
	6 – 9
	7 – 21
	8 – 21
	10 – 9
	16 – 48
	17 – 56
	18 – 56
	19 – 55
	23 – 15
	28 – 11
	28 – 20
	29 – 12
	29 – 20
	40 – 13
	40 – 22
	50 – 4
95380–06600	4 – 43
	5 – 43
	6 – 42
	7 – 37
	8 – 37
	9 – 12
	10 – 75
	28 – 15
	29 – 16
	47 – 9
	48 – 7
	53 – 7
95380–10600	56 – 10
95380–14700	68 – 7
95780–08300	48 – 19
	49 – 5
97003–05012	30 – 12
97075–08035	57 – 2
	58 – 18
97075–10040	47 – 24
	50 – 29
	56 – 4
	56 – 7
	58 – 2
	58 – 10
97090–06045	47 – 8
97095–05012	37 – 8
	37 – 21
	38 – 8
	38 – 21

PART NO.	REF. NO.
97095–05016	53 – 10
97095–05020	47 – 6
97095–06012	53 – 5
97095–06016	48 – 5
	58 – 6
	58 – 15
97095–06018	47 – 3
97095–06025	55 – 28
97095–06065	55 – 27
97095–08025	57 – 6
97303–05012	23 – 10
	24 – 10
	25 – 8
	40 – 8
	41 – 6
97380–05025	4 – 10
	5 – 10
	6 – 10
	10 – 10
97380–06018	7 – 18
	8 – 18
	9 – 20
97380–08030	4 – 37
	5 – 37
	6 – 37
	10 – 37
97595–06512	50 – 10
97595–06514	54 – 11
97595–06516	50 – 12
	50 – 14
97595–06530	54 – 6
97595–06535	55 – 12
97780–05130	10 – 57
97780–06230	22 – 64
97780–40116	42 – 6
97780–50145	2 – 5
	2 – 8
	16 – 47
	17 – 55
	18 – 55
	19 – 54
97890–05016	7 – 62
	7 – 62
	8 – 70
	9 – 3
97890–05025	7 – 14
	8 – 14
	9 – 17

PART NO.	REF. NO.
97890–06018	7 – 45
	8 – 45
97890–06035	9 – 64
98580–04006	4 – 40
	5 – 40
	6 – 40
	9 – 31
	10 – 40
98580–04010	16 – 22
	17 – 27
	18 – 27
	19 – 26
98580–05008	9 – 50
98580–05010	10 – 55
98580–05012	10 – 56
	10 – 86
98580–05014	16 – 7
	17 – 8
	18 – 8
	19 – 8
	22 – 62
98580–05025	17 – 47
	18 – 47
	19 – 46
	22 – 61
98580–05040	10 – 57
98580–05060	2 – 4
	2 – 7
	16 – 47
	17 – 55
	18 – 55
	19 – 54
98780–04010	10 – 45
98780–05010	18 – 79
98780–05018	7 – 29
	8 – 29
98780–06035	22 – 64
98980–05010	28 – 9
	29 – 10
98980–06020	28 – 14
	29 – 15