YAMAHA

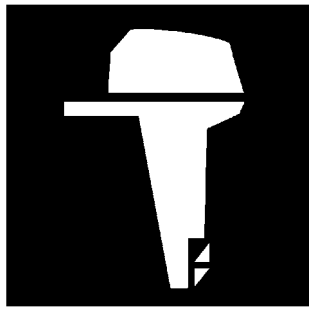

PARTS CATALOGUE
CATALOGUE DE PIECES DETACHEES

RIGGING-REMOCON

1H602-30RF1

( )

YAMAHA GENUINE Parts & Accessories

2009/10/1

NEWS NO.	DATE	COMMENT
PE0-OM-090045	Oct.,1,2009	MOD:FIG.37 EXTENSION, WIRE HARNESS ADDITION

RIGGING-REMOCON
PARTS CATALOGUE
©2009 by Yamaha Motor Co., Ltd.
1st edition, April 2009
All rights reserved.
Any reprinting or unauthorized use
without the written permission of
Yamaha Motor Co., Ltd.
is expressly prohibited.
Printed in Japan.

RIGGING-REMOCON
CATALOGUE DE PIECES DETACHEES
©2009 par Yamaha Motor Co., Ltd.
1re édition, avril 2009
Tous droits réservés
Toute réimpression ou utilisation
non autorisée sans la permission écrite
de la Yamaha Motor Co., Ltd.
est formellement interdite.
Imprimé au Japon

FOREWORD

This Parts Catalogue is related to the parts for the model(s) on the cover page. When you are ordering replacement parts, please refer to this Parts Catalogue and quote both part numbers and part names correctly.

1. Modifications or additions which have been made after the issue of the Parts Catalogue will be announced in the Parts News.
   It is advisable that you make the necessary corrections to the Parts Catalogue according to the Parts News.

2. Abbreviations
   The following abbreviations are used in this Parts Catalogue.

   “UR” Use specified parts number.
   “UN” Use as many as needed.
   “AP” Alternate Parts
   “LM” Locally Made (Parts need to be ordered locally)
   “F#” Frame No. (Applicable machine No.)
   “O/S” Over Size

3. The number of components for assembly
   - Parts, which are to be supplied in an assembly, are listed with a dot (.) in front of the part name as shown below.
   - The numeral appearing to the right of each component part indicates the quantity of parts for each assembly unit.

PART NO.	DESCRIPTION	Q’TY	REMARKS
2F5–83310–60	FRONT FLASHER LIGHT ASSY	2	
115–83311–60	.BULB (6V–18W)	1	

4. Applicable colours of graphics are represented in the “REMARKS” as shown below.

PART NO.	DESCRIPTION	Q’TY	REMARKS
2N4–24110–00–X5	FUEL TANK COMP.	2	MXR
3J1–24240–10	.GRAPHIC, FUEL TANK	1	FOR MXR

5. Note that the illustrations for reference in finding parts numbers are not to be used for assembling. When assembling, please use the applicable service manual.

6. The asterisk (*) before a reference number indicates modified items after the first edition.

AVANT–PROPOS

Ce catalogue de pièces détachées concerne les pièces pour le(s) modèle(s) indiqué(s) sur la page de couverture. Lorsque vous commandez des pièces de rechange, veuillez vous référer à ce catalogue de pieces détachées et indiquer clairement les numéros et les noms des pièces détachées.

1. Les modifications ou ajouts ayant été effectués après la parution du catalogue de pièces détachées seront décrits dans les Bulletins d'information concernant les pièces détachées.
   Il est recommandé que vous apportiez les corrections nécessaires au catalogue des pièces détachées en vous référant aux Bulletins d'information.

2. Abréviations
   Dans ce catalogue, les abréviations suivantes sont utilisées:

   "UR" Utiliser le numéro de pièces spécifié.
   "UN" Utiliser autant que nécessaire.
   "AP" Pièces de substitution
   "LM" Fabrication locale (les pièces doivent être commandées localement.)
   "F#" N° de cadre (applicable au N° de série)
   "O/S" Surdimensionné

3. Nombre de pièces d'un assemblage
   - Les pièces fournies comme composants d'un assemblage sont précédées d'un point (.) de la manière indiquée ci–dessous.
   - Le chiffre apparaissant à la droite de chaque composant indique la quantité de pièces pour chaque unité d'assemblage.

N° PIECES	DESCRIPTION	QTE	REMARQUES
2F5–83310–60	ENS. CLIGNOTANT AVANT	2	
115–83311–60	.AMPOULE (6V–18W)	1	

4. Les couleurs concernant les graphiques sont indiquées dans la colonne "REMARQUES", comme indiqué ci–dessous.

N° PIECES	DESCRIPTION	QTE	REMARQUES
2N4–24110–00–X5	RESERVOIR A ESSENCE.	2	MXR
3J1–24240–10	.GRAPHIQUE	1	POUR MXR

5. Veuillez noter que les illustrations sont indiquées à titre de référence pour trouver les numéros de pièces, non pour être utilisées lors de l'assemblage. Lors de l'assemblage, veuillez utiliser le manuel d'entretien adéquat.

6. L'astérisque (*) placé devant un numéro de référence indique des éléments qui ont été modifiés après la première édition.

CONTENTS

REMOTE CONTROL BOX 1 1
REMOTE CONTROL BOX 2 2
REMOTE CONTROL BOX 3 3
REMOTE CONTROL BOX 4 4
REMOTE CONTROL ASSY 1 5
REMOTE CONTROL ASSY 2 8
REMOTE CONTROL ASSY 3 10
REMOTE CONTROL ASSY 4 13
REMOTE CONTROL ASSY 5 17
REMOTE CONTROL ASSY 6 20
REMOTE CONTROL ASSY 7 23
REMOTE CONTROL ASSY 8 26
REMOTE CONTROL ASSY 9 29
REMOTE CONTROL CABLES 33
LAYOUT CHART 1 (SINGLE) 34
LAYOUT CHART 2 (TWIN) 35
LAYOUT CHART 3 (TRIPLE) 36
DBW REMOTE CONTROL 1 (SINGLE) 37
DBW REMOTE CONTROL 2 (TWIN) 40
DBW REMOTE CONTROL 3 (TRIPLE) 44
LAYOUT CHART 4 (6X7) 48
DBW REMOTE CONTROL 4 (6X7) 49
SWITCH & PANEL 1 52
SWITCH & PANEL 2 53
SWITCH & PANEL 3 54
SWITCH & PANEL 4 55
SWITCH & PANEL 5 56
SWITCH & PANEL 6 57
SWITCH & PANEL 7 58
SWITCH & PANEL 8 59
SWITCH & PANEL 9 60
SWITCH & PANEL 10 61
SWITCH & PANEL 11 62
SWITCH & PANEL 12 63
SWITCH & PANEL 13 64
WIRE HARNESS 1 65
WIRE HARNESS 2 66
ELECTRICAL DBW REMOTE CONTROL 67
REMO CON ATTACHMENT 1 68
REMO CON ATTACHMENT 2 69
REMO CON ATTACHMENT 3 70
REMO CON ATTACHMENT 4 71
REMO CON ATTACHMENT 5 72
REMO CON ATTACHMENT 6 73
REMO CON ATTACHMENT 7 74
REMO CON ATTACHMENT 8 75
REMO CON ATTACHMENT 9 76
REMO CON ATTACHMENT 10 77
STEERING HOOK 1 79
STEERING HOOK 2 80
STEERING HOOK 3 81
STEERING GUIDE 1 82
STEERING GUIDE 2 83
STEERING GUIDE 3 84
STEERING GUIDE 4 85
STEERING GUIDE 5 86
STEERING GUIDE 6 87
STEERING GUIDE 7 88
STEERING GUIDE 8 89
STEERING GUIDE 9 90
STEERING GUIDE 10 91
STEERING GUIDE 11 92

INDEX

NUMERICAL INDEX 93

TABLE DES MATIERES

BOITIER DE COMMANDE A DISTANCE 1
BOITIER DE COMMANDE A DISTANCE 2
BOITIER DE COMMANDE A DISTANCE 3
BOITIER DE COMMANDE A DISTANCE 4
BOITIER DE COMMANDE A DISTANCE 5
BOITIER DE COMMANDE A DISTANCE 8
BOITIER DE COMMANDE A DISTANCE 10
BOITIER DE COMMANDE A DISTANCE 13
BOITIER DE COMMANDE A DISTANCE 17
BOITIER DE COMMANDE A DISTANCE 20
BOITIER DE COMMANDE A DISTANCE 23
BOITIER DE COMMANDE A DISTANCE 26
BOITIER DE COMMANDE A DISTANCE 29
CABLE COMMANDE A DISTANCE 33
DIAGRAMME 1 (SIMPLE) 34
DIAGRAMME 2 (DOUBLE) 35
DIAGRAMME 3 (TROIS) 36
BOITIER COMMANDE 1 (SIMPLE) 37
BOITIER COMMANDE 2 (DOUBLE) 40
BOITIER COMMANDE 3 (TROIS) 44
DIAGRAMME 4 (6X7) 48
BOITIER COMMANDE 4 (6X7) 49
TABLEAU DE CONTACTEUR 1 52
TABLEAU DE CONTACTEUR 2 53
TABLEAU DE CONTACTEUR 3 54
TABLEAU DE CONTACTEUR 4 55
TABLEAU DE CONTACTEUR 5 56
TABLEAU DE CONTACTEUR 6 57
TABLEAU DE CONTACTEUR 7 58
TABLEAU DE CONTACTEUR 8 59
TABLEAU DE CONTACTEUR 9 60
TABLEAU DE CONTACTEUR 10 61
TABLEAU DE CONTACTEUR 11 62
TABLEAU DE CONTACTEUR 12 63
TABLEAU DE CONTACTEUR 13 64
FAISCEAU DE FILS 1 65
FAISCEAU DE FILS 2 66
BOITIER COMMANDE 67
COMMANDE A DISTANCE 1 68
COMMANDE A DISTANCE 2 69
COMMANDE A DISTANCE 3 70
COMMANDE A DISTANCE 4 71
COMMANDE A DISTANCE 5 72
COMMANDE A DISTANCE 6 73
COMMANDE A DISTANCE 7 74
COMMANDE A DISTANCE 8 75
COMMANDE A DISTANCE 9 76
COMMANDE A DISTANCE 10 77
ATTACHE DIRECTION 1 79
ATTACHE DIRECTION 2 80
ATTACHE DIRECTION 3 81
FIXATION DE DIRECTION 1 82
FIXATION DE DIRECTION 2 83
FIXATION DE DIRECTION 3 84
FIXATION DE DIRECTION 4 85
FIXATION DE DIRECTION 5 86
FIXATION DE DIRECTION 6 87
FIXATION DE DIRECTION 7 88
FIXATION DE DIRECTION 8 89
FIXATION DE DIRECTION 9 90
FIXATION DE DIRECTION 10 91
FIXATION DE DIRECTION 11 92

INDEX

INDEX NUMERIQUE 93

REMOTE CONTROL BOX SPECIFICATION LIST (701 TYPE)

TYPE : 701	MECHANICAL SPECIFICATION									
PART NO.	LIST UP SEC.	THROTTLE MOTION		HANDLE POSITION		NEUTRAL LOCK	TIGHTENING		LEVER TYPE	
	FIG.NO-REF.NO.	PULL	PUSH	RIGHT	LEFT		BOLT,NUT	ROUND WOOD SCREW	SINGLE	TWIN
701-48101-23	1-1	○	*	○	*	*	○	*	○	*
701-48101-51		○	*	○	*	*	*	○	○	*
701-48101-G1		○	*	○	*	○	○	*	○	*
701-48102-23		○	*	*	○	*	○	*	○	*
701-48102-51		○	*	*	○	*	○	*	○	*
701-48102-G1		○	*	*	○	○	○	*	○	*
701-48130-23		*	○	○	*	*	○	*	○	*
701-48130-E0		*	○	○	*	○	○	*	○	*
701-48140-E0		*	○	*	○	○	○	*	○	*

REMOTE CONTROL BOX SPECIFICATION LIST (701 TYPE)

TYPE : 701	ELECTRICAL SPECIFICATION								
PART NO.	ENGINE STOP SW.		MAIN SWITCH		PT/T SW.	WIRE HARNESS COUPLER TYPE	BUZZER		NEUTRAL SW.
	PULL PLATE	PUSH BUTTON	CHOKE MODEL	PRIME START MODEL			ANALOG	DIGITAL	
701-48101-23	701-82575-53	*	*	*	*	*	*	*	*
701-48101-51	*	*	*	*	*	*	*	*	*
701-48101-G1	*	*	*	*	*	*	*	*	*
701-48102-23	701-82575-53	*	*	*	*	*	*	*	*
701-48102-51	*	*	*	*	*	*	*	*	*
701-48102-G1	*	*	*	*	*	*	*	*	*
701-48130-23	701-82575-53	*	*	*	*	*	*	*	*
701-48130-E0	701-82575-53	*	*	*	*	*	*	*	*
701-48140-E0	701-82575-53	*	*	*	*	*	*	*	*

701 REMOTE CONTROL

Part No.	Throttle		Lanyard stop S/W	N-lock	Mount		Remarks
	Push	Pull			R	L	
701-48101-23		1	1		1		
701-48101-51		1			1		
701-48101-G1		1		1	1		
701-48102-23		1	1			1	
701-48102-51		1				1	
701-48102-G1		1		1		1	
701-48130-23	1		1		1		
701-48130-E0	1		1	1	1		
701-48140-E0	1		1	1		1	

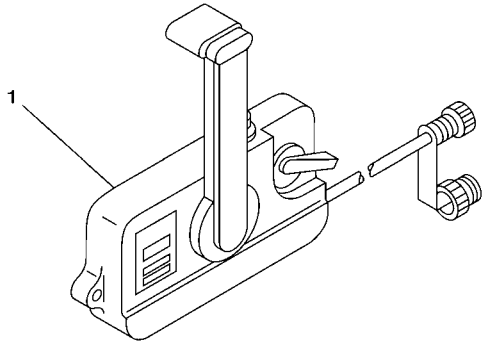

6011100-G010

FIG. 1 REMOTE CONTROL BOX 1 BOITIER DE COMMANDE A DISTANCE

REF. NO.	PART NO. N° PIECES	DESCRIPTION DESCRIPTION	602R					REMARKS REMARQUES
1	701–48101–23	REMOTE CONTROL ASSY (RIGHT) BOITIER DE COMMANDE A DISTANCE	1					UR UR
	701–48101–51	REMOTE CONTROL ASSY (RIGHT) BOITIER DE COMMANDE A DISTANCE	1					UR UR
	701–48101–G1	REMOTE CONTROL ASSY (RIGHT) BOITIER DE COMMANDE A DISTANCE	1					UR UR
	701–48102–23	REMOTE CONTROL ASSY (LEFT) BOITIER DE COMMANDE A DISTANCE	1					UR UR
	701–48102–51	REMOTE CONTROL ASSY (LEFT) BOITIER DE COMMANDE A DISTANCE	1					UR UR
	701–48102–G1	REMOTE CONTROL ASSY (LEFT) BOITIER DE COMMANDE A DISTANCE	1					UR UR
	701–48130–23	REMOTE CONTROL ASSY (RIGHT) BOITIER DE COMMANDE A DISTANCE	1					UR UR
	701–48130–E0	REMOTE CONTROL ASSY (RIGHT) BOITIER DE COMMANDE A DISTANCE	1					UR UR
	701–48140–E0	REMOTE CONTROL ASSY (LEFT) BOITIER DE COMMANDE A DISTANCE	1					UR UR

REMOTE CONTROL BOX SPECIFICATION LIST (703 TYPE)

TYPE : 703	MECHANICAL SPECIFICATION										
PART NO.	LIST UP SEC.	THROTTLE MOTION		HANDLE POSITION		NEUTRAL LOCK	TIGHTENING		LEVER TYPE	
	FIG.NO-REF.NO.	PULL	PUSH	RIGHT	LEFT		BOLT,NUT	ROUND WOOD SCREW	SINGLE	TWIN
703-48204-13	2-1	○	*	*	○	○	○	*	○	*
703-48210-16		○	*	○	*	○	○	*	○	*
703-48220-15		○	*	○	*	○	○	*	*	○
703-48230-15		○	*	○	*	○	○	*	○	*
703-48250-17		○	*	○	*	○	○	*	○	*
703-48272-17		○	*	○	*	○	○	*	○	*
703-48201-16		*	○	○	*	○	○	*	○	*
703-48201-A3		*	○	○	*	○	○	*	○	*
703-48202-15		*	○	○	*	○	○	*	*	○
703-48203-15		*	○	○	*	○	○	*	○	*
703-48203-A3		*	○	○	*	○	○	*	○	*
703-48205-17		*	○	○	*	○	○	*	○	*
703-48205-A5		*	○	○	*	○	○	*	○	*
703-48207-17		*	○	○	*	○	○	*	○	*
703-48207-A5		*	○	○	*	○	○	*	○	*
703-48208-A4		*	○	○	*	○	○	*	*	○

REMOTE CONTROL BOX SPECIFICATION LIST (703 TYPE)

TYPE : 703	ELECTRICAL SPECIFICATION								
PART NO.	ENGINE STOP SW.		MAIN SWITCH		PT/T SW.	WIRE HARNESS COUPLER TYPE	BUZZER		NEUTRAL SW.
	PULL PLATE	PUSH BUTTON	CHOKE MODEL	PRIME START MODEL			ANALOG	DIGITAL	
703-48204-13	688-82575-01	*	705-82510-33	*	*	7P	703-83383-02	*	703-82540-00
703-48210-16	688-82575-01	*	703-82510-43	*	*	10P	703-83383-02	*	703-82540-00
703-48220-15	688-82575-01	*	703-82510-33	*	*	7P	703-83383-02	*	703-82540-00
703-48230-15	688-82575-01	*	703-82510-33	*	*	7P	703-83383-02	*	703-82540-00
703-48250-17	688-82575-01	*	703-82510-43	*	703-82563-02	10P	703-83383-02	*	703-82540-00
703-48272-17	688-82575-01	*	703-82510-43	*	703-82563-12	10P	703-83383-02	*	703-82540-00
703-48201-16	688-82575-01	*	703-82510-43	*	*	10P	703-83383-02	*	703-82540-00
703-48201-A3	688-82575-01	*	*	703-82510-12	*	10P	*	703-83383-B0	703-82540-00
703-48202-15	688-82575-01	*	703-82510-33	*	*	7P	703-83383-02	*	703-82540-00
703-48203-15	688-82575-01	*	703-82510-33	*	*	7P	703-83383-02	*	703-82540-00
703-48203-A3	688-82575-01	*	*	703-82510-03	*	7P	*	703-83383-B0	703-82540-00
703-48205-17	688-82575-01	*	703-82510-43	*	703-82563-02	10P	703-83383-02	*	703-82540-00
703-48205-A5	688-82575-01	*	*	703-82510-12	703-82563-02	10P	*	703-83383-B0	703-82540-00
703-48207-17	688-82575-01	*	703-82510-43	*	703-82563-12	10P	703-83383-02	*	703-82540-00
703-48207-A5	688-82575-01	*	*	703-82510-12	703-82563-12	10P	*	703-83383-B0	703-82540-00
703-48208-A4	688-82575-01	*	*	703-82510-12	*	10P	*	703-83383-B0	703-82540-00

703 REMOTE CONTROL

Part No.	Throttle		Choke	PT/T	Wire-harness		Mount		Remarks
	Push	Pull			7pin	10pin	R	L	
703-48204-13		1	1		1			1	
703-48210-16		1	1			1	1		
703-48220-15		1	1		1		1		For Twin-application
703-48230-15		1	1		1		1		For analog gauge only
703-48250-17		1	1	1		1	1		
703-48272-17		1	1	1		1	1		For additional tilt switch
703-48201-16	1		1			1	1		
703-48201-A3	1					1	1		
703-48202-15	1		1		1		1		For Twin-application
703-48203-15	1		1		1		1		
703-48203-A3	1				1		1		For analog gauge only
703-48205-17	1		1	1		1	1		
703-48205-A5	1			1		1	1		
703-48207-17	1		1	1		1	1		For additional tilt switch
703-48207-A5	1			1		1	1		
703-48208-A4	1					1	1		For Twin-application

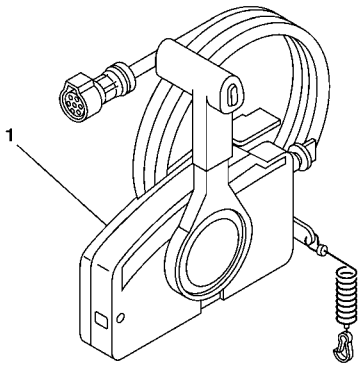

601R10R-H020

FIG. 2 REMOTE CONTROL BOX 2 BOITIER DE COMMANDE A DISTANCE

REF. NO.	PART NO. N° PIECES	DESCRIPTION DESCRIPTION	602R					REMARKS REMARQUES
1	703–48204–13	REMOTE CONTROL ASSY (7P) BOITIER DE COMMANDE A DISTANCE	1					UR WITHOUT PT/T SW. UR WITHOUT PT/T SW.
	703–48210–16	REMOTE CONTROL ASSY (10P) BOITIER DE COMMANDE A DISTANCE	1					UR WITHOUT PT/T SW. UR WITHOUT PT/T SW.
	703–48220–15	REMOTE CONTROL ASSY (7P) BOITIER DE COMMANDE A DISTANCE	1					UR FOR TWIN UR FOR TWIN
	703–48230–15	REMOTE CONTROL ASSY (7P) BOITIER DE COMMANDE A DISTANCE	1					UR WITHOUT PT/T SW. UR WITHOUT PT/T SW.
	703–48250–17	REMOTE CONTROL ASSY (10P) BOITIER DE COMMANDE A DISTANCE	1					UR WITH PT/T SW. UR WITH PT/T SW.
	703–48272–17	REMOTE CONTROL ASSY (10P) BOITIER DE COMMANDE A DISTANCE	1					UR WITH PT/T SW. UR WITH PT/T SW.
	703–48201–16	REMOTE CONTROL ASSY (10P) BOITIER DE COMMANDE A DISTANCE	1					UR WITHOUT PT/T SW. UR WITHOUT PT/T SW.
	703–48201–A3	REMOTE CONTROL ASSY (10P) BOITIER DE COMMANDE A DISTANCE	1					UR WITHOUT PT/T SW. UR WITHOUT PT/T SW.
	703–48202–15	REMOTE CONTROL ASSY (7P) BOITIER DE COMMANDE A DISTANCE	1					UR FOR TWIN UR FOR TWIN
	703–48203–15	REMOTE CONTROL ASSY (7P) BOITIER DE COMMANDE A DISTANCE	1					UR WITHOUT PT/T SW. UR WITHOUT PT/T SW.
	703–48203–A3	REMOTE CONTROL ASSY (7P) BOITIER DE COMMANDE A DISTANCE	1					UR WITHOUT PT/T SW. UR WITHOUT PT/T SW.
	703–48205–17	REMOTE CONTROL ASSY (10P) BOITIER DE COMMANDE A DISTANCE	1					UR WITH PT/T SW. UR WITH PT/T SW.
	703–48205–A5	REMOTE CONTROL ASSY (10P) BOITIER DE COMMANDE A DISTANCE	1					UR WITH PT/T SW. UR WITH PT/T SW.
	703–48207–17	REMOTE CONTROL ASSY (10P) BOITIER DE COMMANDE A DISTANCE	1					UR WITH PT/T SW. UR WITH PT/T SW.
	703–48207–A5	REMOTE CONTROL ASSY (10P) BOITIER DE COMMANDE A DISTANCE	1					UR WITH PT/T SW. UR WITH PT/T SW.
	703–48208–A4	REMOTE CONTROL ASSY (10P) BOITIER DE COMMANDE A DISTANCE	1					UR FOR TWIN UR FOR TWIN

REMOTE CONTROL BOX SPECIFICATION LIST (704 TYPE)

TYPE : 704	MECHANICAL SPECIFICATION								
TYPE : 704 (SINGLE)	LIST UP SEC.	HANDLE POSITION		SHIFT MOTION		THROTTLE MOTION		LEVER TYPE	
PART NO.	FIG.NO.-REF.NO.	RIGHT	LEFT	PULL	PUSH	PULL	PUSH	SINGLE	TWIN
704-48205-B1	3-1	*	○	○	*	*	○	○	*
704-48203-P1	3-2	*	○	○	*	*	○	○	*
704-48205-P1		*	○	○	*	*	○	○	*
704-48206-P1		○	*	○	*	*	○	○	*
TYPE : 704 (TWIN)	LIST UP SEC.	HANDLE POSITION		SHIFT MOTION		THROTTLE MOTION		LEVER TYPE	
PART NO.	FIG.NO.-REF.NO.	RIGHT	LEFT	PULL	PUSH	PULL	PUSH	SINGLE	TWIN
704-48207-P1	3-3	*	*	○	*	*	○	*	○

REMOTE CONTROL BOX SPECIFICATION LIST (704 TYPE)

TYPE : 704	ELECTRICAL SPECIFICATION					
TYPE : 704 (SINGLE)	PT/T SW.			NEUTRAL SW.	CABLE TERMINAL	
PART NO.	BODY SW.	BODY SW.	GRIP SW.		MM	INCH
704-48205-B1	*	*	704-82563-41	704-82540-20	*	○
704-48203-P1	*	*	*	704-82540-20	*	○
704-48205-P1	*	*	704-82563-41	704-82540-20	*	○
704-48206-P1	*	*	704-82563-41	704-82540-20	*	○
TYPE : 704 (TWIN)	PT/T SW.			NEUTRAL SW.	CABLE TERMINAL	
PART NO.	BODY SW.	BODY SW.	GRIP SW.		MM	INCH
704-48207-P1	704-82563-H1	704-82563-J1	704-82563-51	704-82540-30	*	○

704 REMOTE CONTROL

Part No.	Throttle		PTT	Lever			Remarks
	Push	Pull		R	L	Twin	
704-48205-B1	1		1		1		Standard
704-48203-P1	1				1		Premium
704-48205-P1	1		1		1		Premium
704-48206-P1	1		1	1			Premium
704-48207-P1	1		1			1	Premium

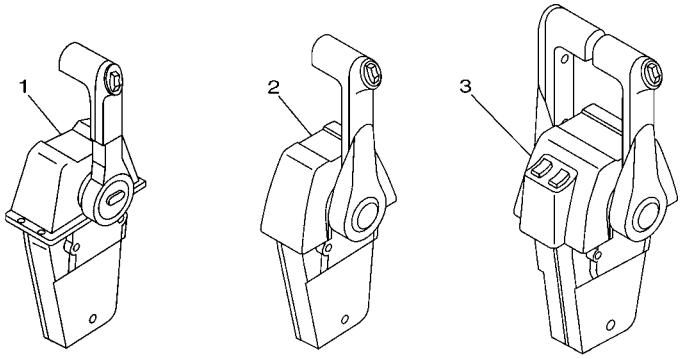

Standard single Premium single Premium twin

Part No.	Remarks
704-48293-00	For Single lever, Standard
704-48293-20	For Single lever, Premium
704-48293-30	For Twin lever, Premium

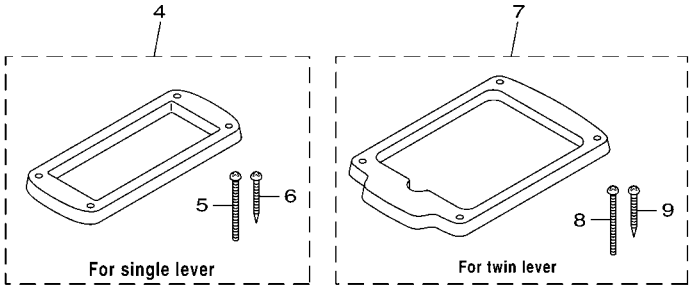

6011100-G030

FIG. 3 REMOTE CONTROL BOX 3 BOITIER DE COMMANDE A DISTANCE

REF. NO.	PART NO. N° PIECES	DESCRIPTION DESCRIPTION	602R					REMARKS REMARQUES
1	704–48205–B1	REMOTE CONTROL ASSY BOITIER DE COMMANDE A DISTANCE	1					WITH PT/T SW. WITH PT/T SW.
2	704–48203–P1	REMOTE CONTROL ASSY (RIGHT) BOITIER DE COMMANDE A DISTANCE	1					UR WITHOUT PT/T SW. UR WITHOUT PT/T SW.
	704–48205–P1	REMOTE CONTROL ASSY (RIGHT) BOITIER DE COMMANDE A DISTANCE	1					UR WITH PT/T SW. UR WITH PT/T SW.
	704–48206–P1	REMOTE CONTROL ASSY (LEFT) BOITIER DE COMMANDE A DISTANCE	1					UR WITH PT/T SW. UR WITH PT/T SW.
3	704–48207–P1	REMOTE CONTROL ASSY BOITIER DE COMMANDE A DISTANCE	1					WITH PT/T SW. WITH PT/T SW.
4	704–48293–00	SPACER, REMOTE CONTROL ENTRETOISE	1					UR FOR SINGLE UR FOR SINGLE
	704–48293–20	SPACER, REMOTE CONTROL ENTRETOISE	1					UR FOR SINGLE UR FOR SINGLE
5	98580–05060	.SCREW, PAN HEAD .VIS	4					
6	97780–50145	.SCREW, TAPPING .VIS, TETE BOMBEE	4					
7	704–48293–30	SPACER, REMOTE CONTROL ENTRETOISE	1					FOR TWIN FOR TWIN
8	98580–05060	.SCREW, PAN HEAD .VIS	4					
9	97780–50145	.SCREW, TAPPING .VIS, TETE BOMBEE	4					

REMOTE CONTROL BOX SPECIFICATION LIST (6X3/6X5 TYPE)

SIDE MOUNT	MECHANICAL SPECIFICATION									
TYPE : 6X3 (SINGLE)	LIST UP SEC.	HANDLE POSITION		SHIFT MOTION		THROTTLE MOTION		LEVER TYPE		
PART NO.	FIG.NO.-REF.NO.	RIGHT	LEFT	PULL	PUSH	PULL	PUSH	SINGLE	TWIN	TRIPLE
6X3-48206-01	4-1	○	*	○	*	*	○	○	*	*

TOP MOUNT	MECHANICAL SPECIFICATION									
TYPE : 6X5	LIST UP SEC.	HANDLE POSITION		SHIFT MOTION		THROTTLE MOTION		LEVER TYPE		
PART NO.	FIG.NO.-REF.NO.	RIGHT	LEFT	PULL	PUSH	PULL	PUSH	SINGLE	TWIN	TRIPLE
6X5-48207-01	4-2	○	*	*	○	○	*	*	*	○

REMOTE CONTROL BOX SPECIFICATION LIST (6X3/6X5 TYPE)

SIDE MOUNT	ELECTRICAL SPECIFICATION						
TYPE : 6X3 (SINGLE)	PT/T SW.				NEUTRAL SW.	CABLE TERMINAL	
PART NO.	BODY SW.	BODY SW.	BODY SW.	GRIP SW.		MM	INCH
6X3-48206-01	*	*	*	6X3-82563-01	704-82540-00	*	○
TOP MOUNT	ELECTRICAL SPECIFICATION						
TYPE : 6X5	PT/T SW.				NEUTRAL SW.	CABLE TERMINAL	
PART NO.	BODY SW.	BODY SW.	BODY SW.	GRIP SW.		MM	INCH
6X5-48207-01	6X5-82563-11	6X5-82563-21	6X5-82563-31	6X5-82563-01	6X5-82540-00	*	○

6X3 REMOTE CONTROL

Part No.	Throttle		PTT	Mount		Remarks
	Push	Pull		R	L	
6X3-48206-01	1		1	1		With emergency shut-off cord

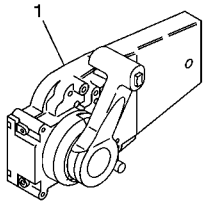

6X5 REMOTE CONTROL

Part No.	Throttle		PTT	Mount		Remarks
	Push	Pull		R	L	
6X5-48207-01	1		1	1		Triple

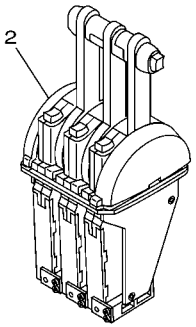

601R10R-H040

FIG. 4 REMOTE CONTROL BOX 4 BOITIER DE COMMANDE A DISTANCE

REF. NO.	PART NO. N° PIECES	DESCRIPTION DESCRIPTION	602R					REMARKS REMARQUES
1	6X3–48206–01	REMOTE CONTROL ASSY MONO LEVIER GAUCHE AVEC TRIM	1					WITH PT/T SW. WITH PT/T SW.
2	6X5–48207–01	REMOTE CONTROL ASSY BOITIER DE COMMANDE A DISTANCE	1					WITH PT/T SW. WITH PT/T SW.

701 REMOTE CONTROL (PULL TO OPEN TYPE)

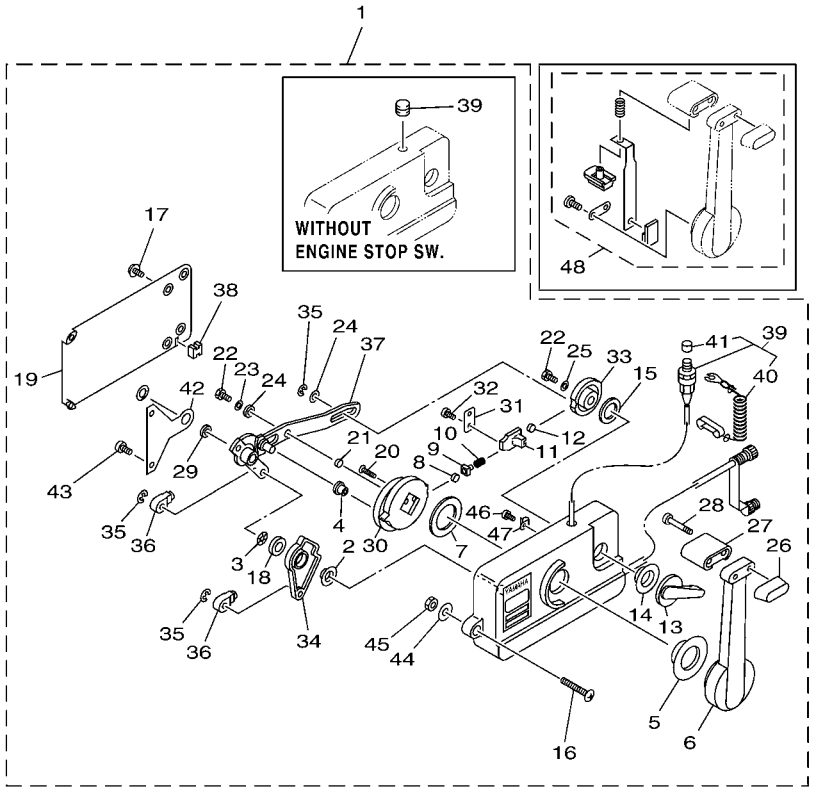

*1 : FOR 701-48101-23/ 701-48102-23
*2 : FOR 701-48101-51/ 701-48102-51/ 701-48102-G1
*3 : FOR 701-48101-G1/ 701-48102-G1

6011100-G050

FIG. 5 REMOTE CONTROL ASSY 1 BOITIER DE COMMANDE A DISTANCE

REF. NO.	PART NO. N° PIECES	DESCRIPTION DESCRIPTION	602R					REMARKS REMARQUES
1	701–48101–23	REMOTE CONTROL ASSY (RIGHT) BOITIER DE COMMANDE A DISTANCE	1					UR UR
	701–48101–51	REMOTE CONTROL ASSY (RIGHT) BOITIER DE COMMANDE A DISTANCE	1					UR UR
	701–48101–G1	REMOTE CONTROL ASSY (RIGHT) BOITIER DE COMMANDE A DISTANCE	1					UR UR
	701–48102–23	REMOTE CONTROL ASSY (LEFT) BOITIER DE COMMANDE A DISTANCE	1					UR UR
	701–48102–51	REMOTE CONTROL ASSY (LEFT) BOITIER DE COMMANDE A DISTANCE	1					UR UR
	701–48102–G1	REMOTE CONTROL ASSY (LEFT) BOITIER DE COMMANDE A DISTANCE	1					UR UR
2	701–48235–00	.BUSHING .COUSSINET	1					
3	701–48197–10	.WASHER, WAVE .RONDELLE, ELASTIQUE ONDULEE	1					
4	701–48252–00	.ROLLER, CAM .POULIE	1					
5	701–48234–00	.BUSHING 1 .POULIE	1					
6	701–48221–00	.LEVER, CONTROL .LEVIER, COMMANDE	1					
7	701–48196–11	.WASHER, WAVE .RONDELLE, ELASTIQUE ONDULEE	1					
8	701–48236–00	.ROLLER, DETENT .POULIE	1					
9	702–48237–00	.ADAPTOR .ADAPTEUR	1					
10	702–48238–00	.SPRING, DETENT .RESSORT	1					
11	701–48249–00	.ADAPTOR, SPRING .ADAPTEUR	1					
12	701–48248–00	.ROLLER, FREE ACCEL. .POULIE	1					
13	701–48152–11	.KNOB, FREE ACCEL. .BOUTON	1					FOR RIGHT FOR RIGHT
	701–48152–20	.KNOB, FREE ACCEL. .BOUTON	1					FOR LEFT FOR LEFT
14	701–48243–00	.BUSHING .COUSSINET	1					
15	701–48198–10	.WASHER, WAVE .RONDELLE, ELASTIQUE ONDULEE	1					
16	701–48281–10	.SCREW .VIS	3					
17	701–48289–00	.SCREW .VIS	4					
18	701–48268–00	.SPACER .ENTRETOISE	1					
19	701–48213–00	.BACK PLATE 2 .PLAQUETTE 2	1					
20	92780–06025	.SCREW, FLAT HEAD .VIS A TETE FRAISEE	2					
21	701–48255–00	.COLLAR .ENTRETOISE	1					

701 REMOTE CONTROL (PULL TO OPEN TYPE)

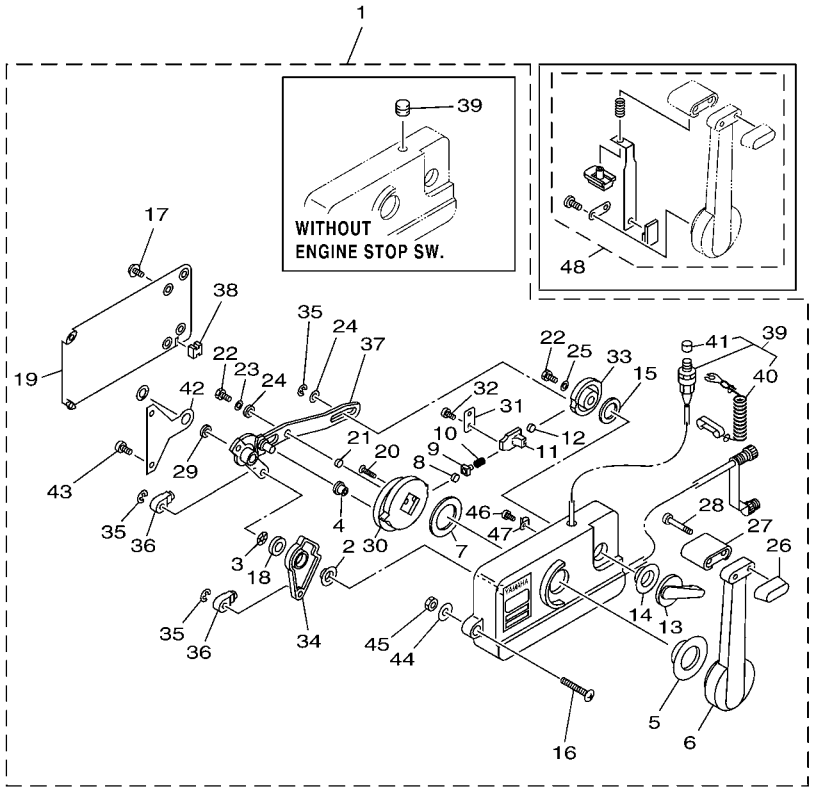

*1 : FOR 701-48101-23/ 701-48102-23
*2 : FOR 701-48101-51/ 701-48101-G1/ 701-48102-51/ 701-48102-G1
*3 : FOR 701-48101-G1/ 701-48102-G1

6011100-G050

FIG. 5 REMOTE CONTROL ASSY 1 BOITIER DE COMMANDE A DISTANCE

REF. NO.	PART NO. N° PIECES	DESCRIPTION DESCRIPTION	602R					REMARKS REMARQUES
22	97390–06018	.BOLT .BOLT (624)	2					
23	702–48288–00	.WASHER, PLAIN .RONDELLE, PLATE	1					
24	701–48246–00	.SPACER .ENTRETOISE	2					
25	92990–06300	.WASHER, INTERNAL TOOTH .RONDELLE, DENTURE INTERNE	1					
26	701–48229–00	.GRIP, CONTROL LEVER .POIGNEE, COMMANDE LEVIER	1					
27	701–48222–00	.GRIP, CONTROL LEVER .POIGNEE, COMMANDE LEVIER	1					
28	701–48282–00	.SCREW .VIS	2					
29	701–48266–00	.SPACER .ENTRETOISE	1					
30	701–48232–00	.GEAR .PIGNON	1					
31	701–48189–11	.RETAINER .FLASQUE	1					
32	98580–05010	.SCREW, PAN HEAD .VIS	2					
33	701–48153–12	.SHAFT, FREE ACCEL. .AXE	1					
34	701–48271–00	.ARM, SHIFT .BRAS	1					FOR RIGHT FOR RIGHT
	701–48271–10	.ARM, SHIFT .BRAS	1					FOR LEFT FOR LEFT
35	93430–06024	.CIRCLIP .CLIPS	3					
36	703–48345–01	.CABLE END, REMOTE CONTROL 2 .CHAPE CABLE	2					
37	701–48261–00	.ARM, THROTTLE .BRAS, ACCELERATION	1					FOR RIGHT FOR RIGHT
	701–48261–10	.ARM, THROTTLE .BRAS, ACCELERATION	1					FOR LEFT FOR LEFT
38	701–48358–00	.ANCHOR, CABLE .COLLIER	1					
39	701–82575–53	.ENGINE STOP SWITCH ASSY .COUPE CIRCUIT CPLT	1					*1 *1
	701–48138–50	.CAP, LOCK ARM .AMORTISSEUR	1					*2 *2
40	682–82556–00	..LANYARD, STOP SWITCH ..PLAQUETTE	1					FOR 701-82575-53 FOR 701-82575-53
41	689–8257Y–00	..CAP ..COUVERCLE	1					FOR 701-82575-53 FOR 701-82575-53
42	701–48133–00	.PLATE, LINK .PLAQUE, BIELLETTE	1					
43	98580–05020	.SCREW, PAN HEAD .VIS	2					
44	701–48287–00	.WASHER .RONDELLE	3					
45	95380–06600	.NUT, HEXAGON .ECROU	3					

701 REMOTE CONTROL (PULL TO OPEN TYPE)

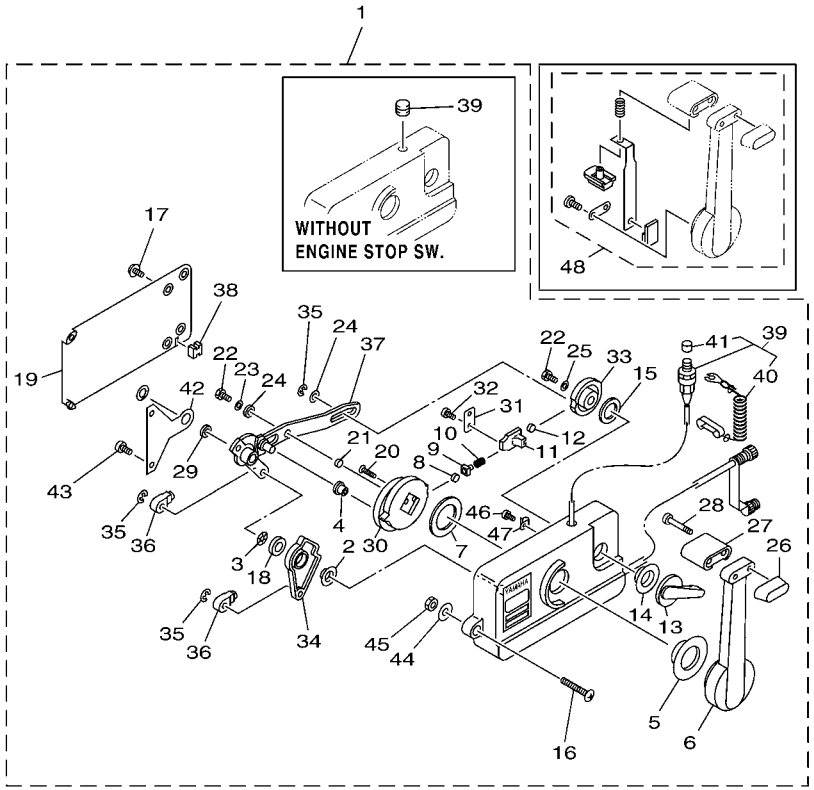

*1 : FOR 701-48101-23/ 701-48102-23
*2 : FOR 701-48101-51/ 701-48101-G1/ 701-48102-51/ 701-48102-G1
*3 : FOR 701-48101-G1/ 701-48102-G1

6011100-G050

FIG. 5 REMOTE CONTROL ASSY 1 BOITIER DE COMMANDE A DISTANCE

REF. NO.	PART NO. N° PIECES	DESCRIPTION DESCRIPTION	602R					REMARKS REMARQUES
46	701–48283–00	.SCREW .VIS	1					*1 *1
47	701–82594–00	.CLAMP .BRIDE	1					*1 *1
48	701–48280–00	NEUTRAL LOCK KIT KIT DE VERROU NEUTRAL	1					*3 *3

701 REMOTE CONTROL (PUSH TO OPEN TYPE)

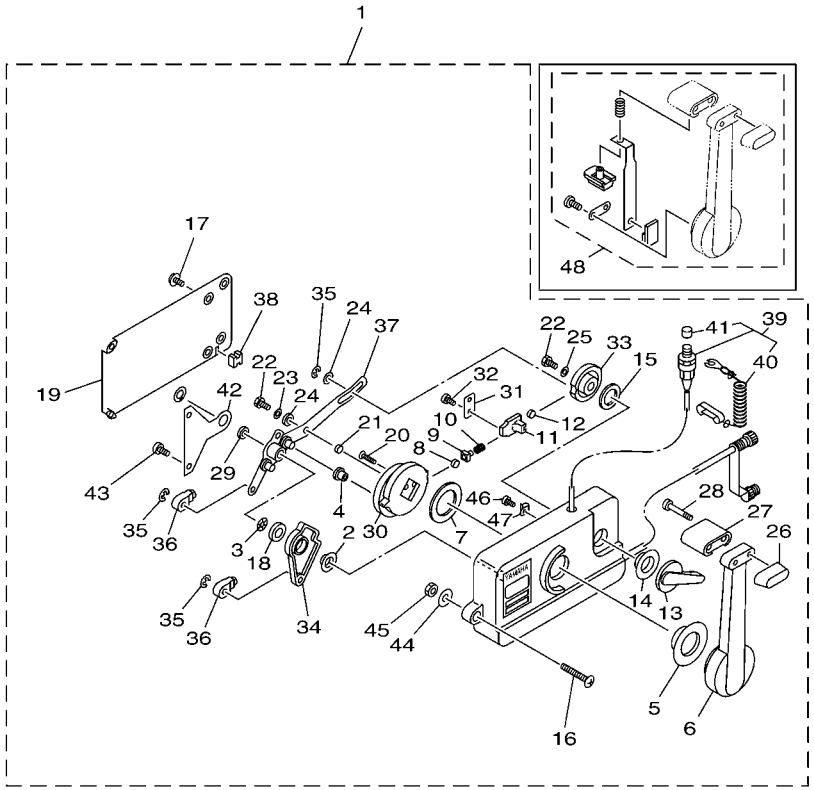

*1 : FOR 701-48130-E0/ 701-18140-E0

6011100-G060

FIG. 6 REMOTE CONTROL ASSY 2 BOITIER DE COMMANDE A DISTANCE

REF. NO.	PART NO. N° PIECES	DESCRIPTION DESCRIPTION	602R					REMARKS REMARQUES
1	701–48130–23	REMOTE CONTROL ASSY (RIGHT) BOITIER DE COMMANDE A DISTANCE	1					UR UR
	701–48130–E0	REMOTE CONTROL ASSY (RIGHT) BOITIER DE COMMANDE A DISTANCE	1					UR UR
	701–48140–E0	REMOTE CONTROL ASSY (LEFT) BOITIER DE COMMANDE A DISTANCE	1					UR UR
2	701–48235–00	.BUSHING .COUSSINET	1					
3	701–48197–10	.WASHER, WAVE .RONDELLE, ELASTIQUE ONDULEE	1					
4	701–48252–00	.ROLLER, CAM .POULIE	1					
5	701–48234–00	.BUSHING 1 .POULIE	1					
6	701–48221–00	.LEVER, CONTROL .LEVIER, COMMANDE	1					
7	701–48196–11	.WASHER, WAVE .RONDELLE, ELASTIQUE ONDULEE	1					
8	701–48236–00	.ROLLER, DETENT .POULIE	1					
9	702–48237–00	.ADAPTOR .ADAPTEUR	1					
10	702–48238–00	.SPRING, DETENT .RESSORT	1					
11	701–48249–00	.ADAPTOR, SPRING .ADAPTEUR	1					
12	701–48248–00	.ROLLER, FREE ACCEL. .POULIE	1					
13	701–48152–11	.KNOB, FREE ACCEL. .BOUTON	1					FOR RIGHT FOR RIGHT
	701–48152–20	.KNOB, FREE ACCEL. .BOUTON	1					FOR LEFT FOR LEFT
14	701–48243–00	.BUSHING .COUSSINET	1					
15	701–48198–10	.WASHER, WAVE .RONDELLE, ELASTIQUE ONDULEE	1					
16	701–48281–10	.SCREW .VIS	3					
17	701–48289–00	.SCREW .VIS	4					
18	701–48268–00	.SPACER .ENTRETOISE	1					
19	701–48213–00	.BACK PLATE 2 .PLAQUETTE 2	1					
20	92780–06025	.SCREW, FLAT HEAD .VIS A TETE FRAISEE	2					
21	701–48255–00	.COLLAR .ENTRETOISE	1					
22	97390–06018	.BOLT .BOLT (624)	2					
23	702–48288–00	.WASHER, PLAIN .RONDELLE, PLATE	1					
24	701–48246–00	.SPACER .ENTRETOISE	2					

701 REMOTE CONTROL (PUSH TO OPEN TYPE)

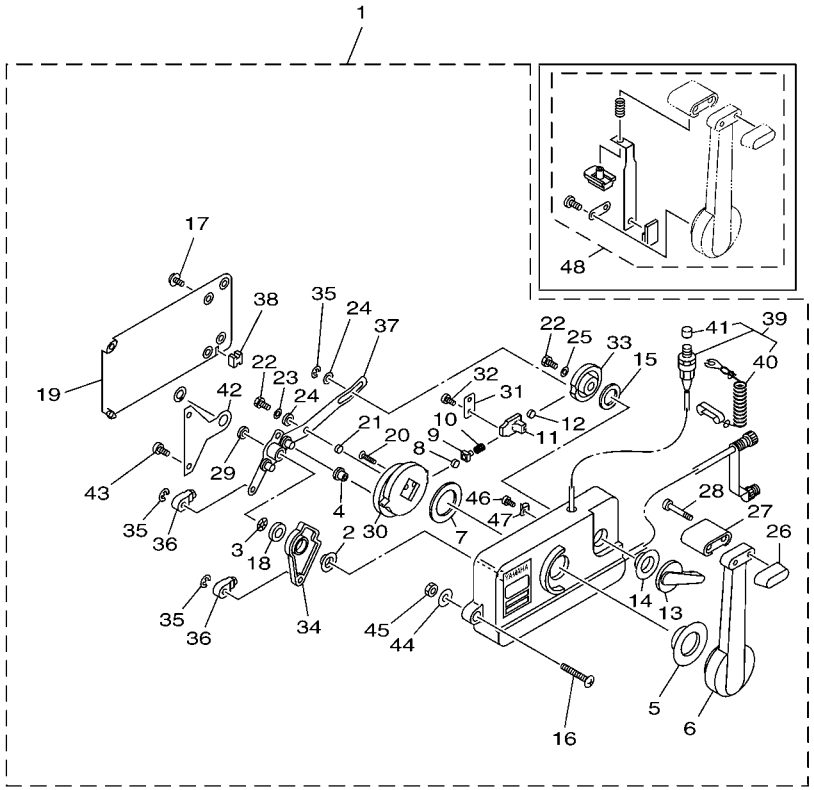

*1 : FOR 701-48130-E0/ 701-18140-E0

6011100-G060

FIG. 6 REMOTE CONTROL ASSY 2 BOITIER DE COMMANDE A DISTANCE

REF. NO.	PART NO. N° PIECES	DESCRIPTION DESCRIPTION	602R					REMARKS REMARQUES
25	92990–06300	.WASHER, INTERNAL TOOTH .RONDELLE, DENTURE INTERNE	1					
26	701–48229–00	.GRIP, CONTROL LEVER .POIGNEE, COMMANDE LEVIER	1					
27	701–48222–00	.GRIP, CONTROL LEVER .POIGNEE, COMMANDE LEVIER	1					
28	701–48282–00	.SCREW .VIS	2					
29	701–48266–00	.SPACER .ENTRETOISE	1					
30	701–48232–00	.GEAR .PIGNON	1					
31	701–48189–11	.RETAINER .FLASQUE	1					
32	98580–05010	.SCREW, PAN HEAD .VIS	2					
33	701–48153–12	.SHAFT, FREE ACCEL. .AXE	1					
34	701–48271–00	.ARM, SHIFT .BRAS	1					FOR RIGHT FOR RIGHT
	701–48271–10	.ARM, SHIFT .BRAS	1					FOR LEFT FOR LEFT
35	93430–06024	.CIRCLIP .CLIPS	3					
36	703–48345–01	.CABLE END, REMOTE CONTROL 2 .CHAPE CABLE	2					
37	701–48261–20	.ARM, THROTTLE .BRAS, ACCELERATION	1					
38	701–48358–00	.ANCHOR, CABLE .COLLIER	1					
39	701–82575–53	.ENGINE STOP SWITCH ASSY .COUPE CIRCUIT CPLT	1					
40	682–82556–00	..LANYARD, STOP SWITCH ..PLAQUETTE	1					
41	689–8257Y–00	..CAP ..COUVERCLE	1					
42	701–48133–00	.PLATE, LINK .PLAQUE, BIELLETTE	1					
43	98580–05020	.SCREW, PAN HEAD .VIS	2					
44	701–48287–00	.WASHER .RONDELLE	3					
45	95380–06600	.NUT, HEXAGON .ECROU	3					
46	701–48283–00	.SCREW .VIS	1					
47	701–82594–00	.CLAMP .BRIDE	1					
48	701–48280–00	NEUTRAL LOCK KIT KIT DE VERROU NEUTRAL	1					*1 *1

FIG. 7 REMOTE CONTROL ASSY 3 BOITIER DE COMMANDE A DISTANCE

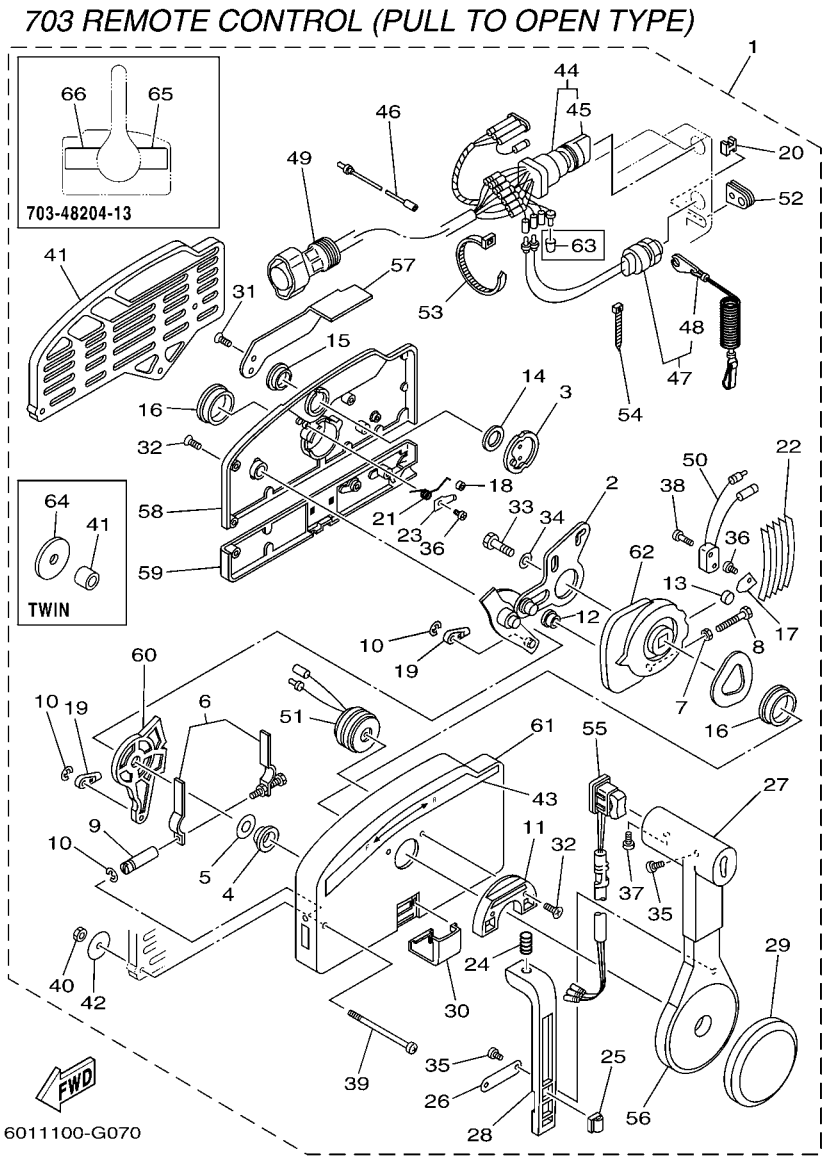

REF. NO.	PART NO. N° PIECES	DESCRIPTION DESCRIPTION	602R					REMARKS REMARQUES
1	703–48204–13	REMOTE CONTROL ASSY (7P) BOITIER DE COMMANDE A DISTANCE	1					UR WITHOUT PT/T SW. UR WITHOUT PT/T SW.
	703–48210–16	REMOTE CONTROL ASSY (10P) BOITIER DE COMMANDE A DISTANCE	1					UR WITHOUT PT/T SW. UR WITHOUT PT/T SW.
	703–48220–15	REMOTE CONTROL ASSY (7P) BOITIER DE COMMANDE A DISTANCE	1					UR FOR TWIN UR FOR TWIN
	703–48230–15	REMOTE CONTROL ASSY (7P) BOITIER DE COMMANDE A DISTANCE	1					UR WITHOUT PT/T SW. UR WITHOUT PT/T SW.
	703–48250–17	REMOTE CONTROL ASSY (10P) BOITIER DE COMMANDE A DISTANCE	1					UR WITH PT/T SW. UR WITH PT/T SW.
	703–48272–17	REMOTE CONTROL ASSY (10P) BOITIER DE COMMANDE A DISTANCE	1					UR WITH PT/T SW. UR WITH PT/T SW.
2	703–48261–11	.ARM, THROTTLE .BRAS, ACCELERATION	1					
3	703–48153–00	.SHAFT, FREE ACCEL. .AXE	1					
4	703–48235–00	.BUSHING .COUSSINET	1					
5	703–48268–00	.SPACER .ENTRETOISE	1					
6	703–48264–00	.FRICTION, THROTTLE .FRICTION, ACCELERATION	1					
7	95380–05600	.NUT .ECROU	1					
8	97380–05025	.BOLT .BOULON, HEXAGONAL	1					
9	703–48265–00	.SHAFT, FRICTION .AXE, COPILOTE	1					
10	93430–06024	.CIRCLIP .CLIPS	3					
11	703–48245–00	.PLATE, LOCK .PLAQUE, VERROU	1					
12	703–48252–00	.ROLLER, CAM .POULIE	1					
13	701–48248–00	.ROLLER, FREE ACCEL. .POULIE	1					
14	703–48198–00	.WASHER, WAVE .RONDELLE, ELASTIQUE ONDULEE	1					
15	703–48243–00	.BUSHING .COUSSINET	1					
16	703–48236–00	.BUSHING 1 .POULIE	2					
17	703–48189–00	.RETAINER .FLASQUE	1					
18	703–48234–00	.ROLLER, DETENT .POULIE	1					
19	703–48345–01	.CABLE END, REMOTE CONTROL 2 .CHAPE CABLE	2					
20	703–48358–00	.ANCHOR, CABLE .COLLIER	1					
21	703–48244–00	.SPRING, FREE ACCEL. .RESSORT	1					
22	703–48238–00	.SPRING, DETENT .RESSORT	5					

703 REMOTE CONTROL (PULL TO OPEN TYPE)

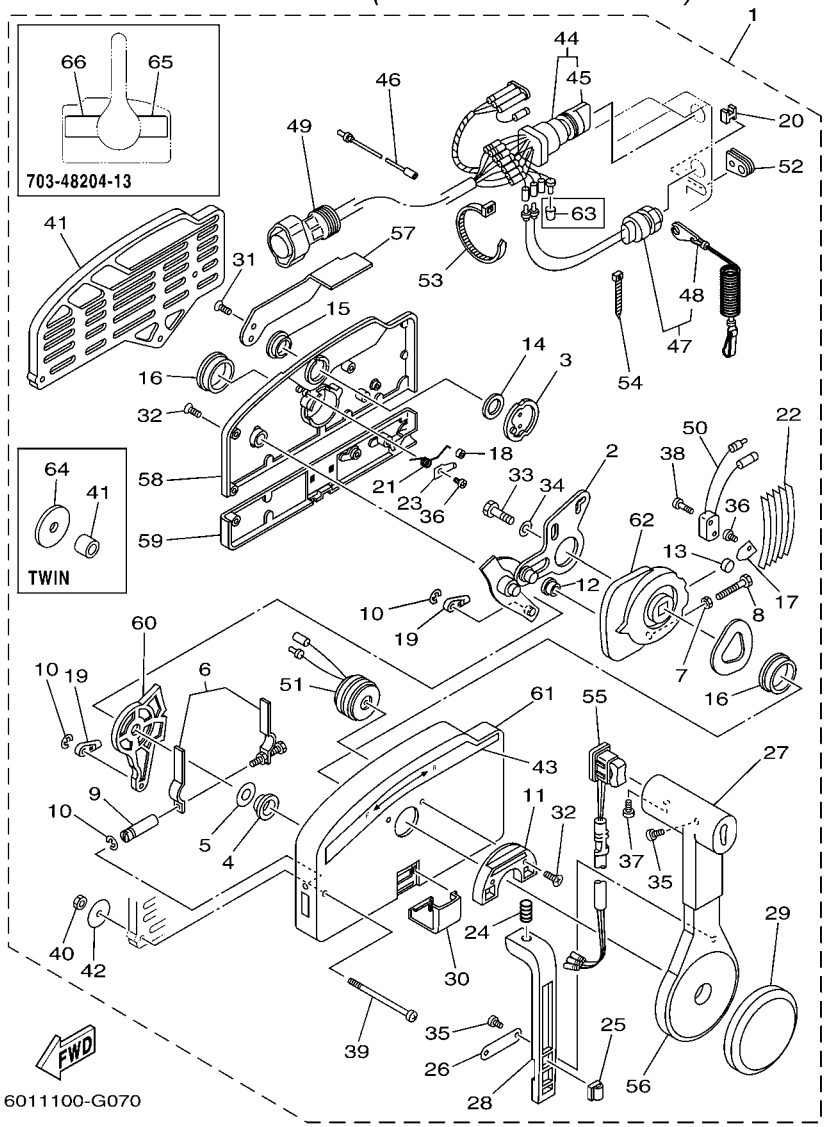

FIG. 7 REMOTE CONTROL ASSY 3 BOITIER DE COMMANDE A DISTANCE

REF. NO.	PART NO. N° PIECES	DESCRIPTION DESCRIPTION	602R					REMARKS REMARQUES
23	703–48246–00	.SPACER .ENTRETOISE	1					
24	703–48227–00	.SPRING, NEUTRAL LOCK .RESSORT	1					
25	703–82594–00	.CLAMP .BRIDE	1					WITH PT/T SW. WITH PT/T SW.
26	703–48226–00	.PLATE, STOPPER .PLAQUETTE	1					
27	703–48222–00	.GRIP, CONTROL LEVER .POIGNEE, COMMANDE LEVIER	1					FOR SINGLE FOR SINGLE
	703–48222–10	.GRIP, CONTROL LEVER .POIGNEE, COMMANDE LEVIER	1					FOR TWIN FOR TWIN
28	703–48223–00	.LOCK, NEUTRAL .VERROU, NEUTRAL	1					
29	703–48225–00	.COVER .COUVERCLE	1					
30	703–48219–00	.COVER, LEAD .COUVERCLE	1					
31	703–48281–00	.SCREW .VIS	2					
32	703–48282–00	.SCREW .VIS	7					
33	97380–08030	.BOLT .BOULON, HEXAGONAL	1					
34	92990–08600	.WASHER, PLATE .RONDELLE, PLATE	1					
35	98580–04010	.SCREW, PAN HEAD .VIS	3					FOR SINGLE FOR SINGLE
	98580–04010	.SCREW, PAN HEAD .VIS	2					FOR TWIN FOR TWIN
36	98580–04006	.SCREW, PAN HEAD .VIS	2					
37	98580–05010	.SCREW, PAN HEAD .VIS	1					
38	98580–03015	.SCREW, PAN HEAD .VIS	2					
39	703–48291–10	.SCREW (M6) .VIS (M6)	3					
40	95380–06600	.NUT, HEXAGON .ECROU	3					
41	703–48293–10	.SPACER, REMOTE CONTROL .ENTRETOISE	1					FOR SINGLE FOR SINGLE
	703–48293–00	.SPACER, REMOTE CONTROL .ENTRETOISE	3					FOR TWIN FOR TWIN
42	701–48287–00	.WASHER .RONDELLE	3					
43	703–48215–00	.GRAPHIC .ADHESIF	1					EXCEPT 703-48204-13 EXCEPT 703-48204-13
44	703–82510–33	.MAIN SWITCH ASSY .CONTACTEUR A CLEF COMPLET	1					(7P) (7P)
	703–82510–43	.MAIN SWITCH ASSY .CONTACTEUR A CLEF COMPLET	1					(10P) (10P)
45	703–82577–00	..CAP, KEY ..CABOCHON	1					

FIG. 7 REMOTE CONTROL ASSY 3 BOITIER DE COMMANDE A DISTANCE

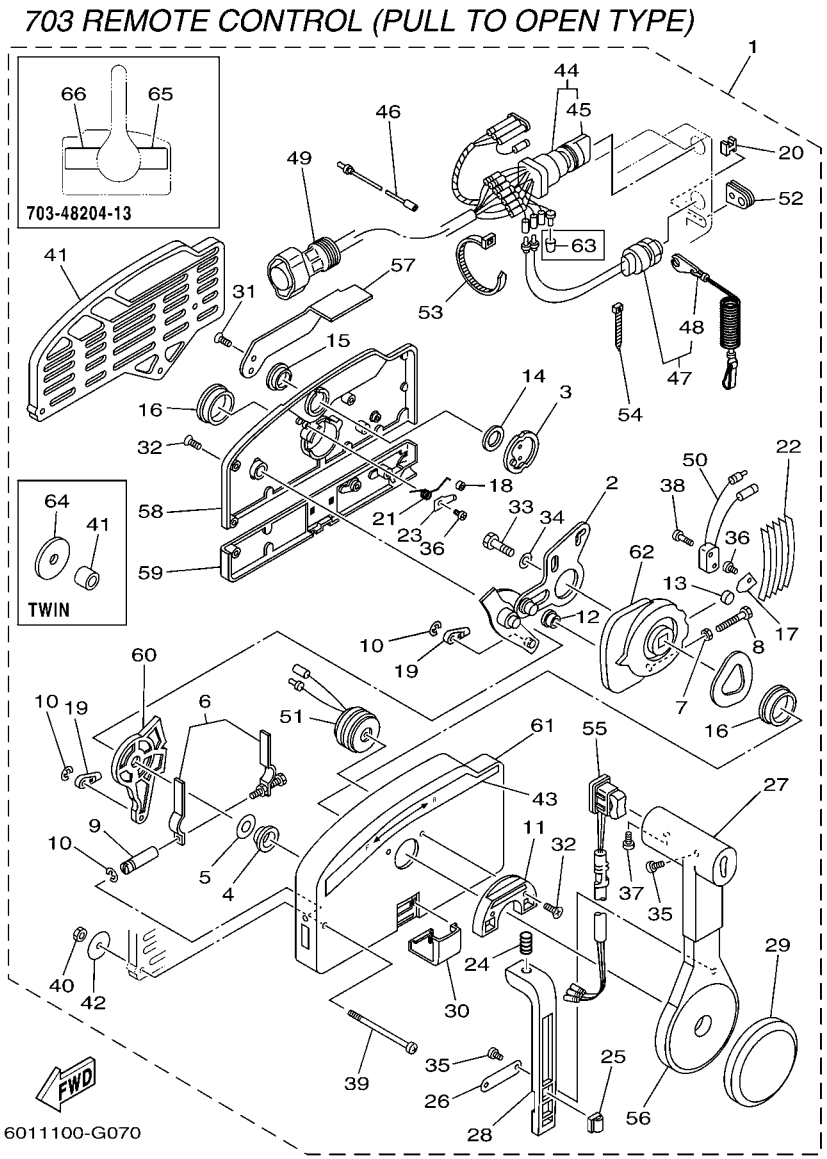

REF. NO.	PART NO. N° PIECES	DESCRIPTION DESCRIPTION	602R					REMARKS REMARQUES
46	703–82531–00	.WIRE, LEAD (L70) .FIL (L70)	1					
47	688–82575–01	.ENGINE STOP SWITCH ASSY .COUPE CIRCUIT CPLT	1					
48	682–82556–00	..LANYARD, STOP SWITCH ..PLAQUETTE	1					
49	688–82586–21	.EXTENSION, WIRE HARNESS (4.9M) .EXTENSION, FAISCEAU DE FILS (4	1					(7P) (7P)
	688–8258A–20	.EXTENSION, WIRE HARNESS (4.9M) .EXTENSION, FAISCEAU DE FILS (4	1					(10P) (10P)
50	703–82540–00	.NEUTRAL SWITCH ASSY .CONTACTEUR DE POINT-MORT	1					
51	703–83383–02	.BUZZER .RONFLEUR	1					
52	703–48284–00	.GROMMET .PASSE-FIL	1					
	703–48284–10	.GROMMET .PASSE-FIL	1					FOR 703-48272-17 FOR 703-48272-17
53	703–82591–00	.BAND .COLLIER	1					
	703–82591–00	.BAND .COLLIER	3					FOR 703-48272-17 FOR 703-48272-17
54	703–82592–00	.BAND .COLLIER	1					
55	703–48224–00	.COVER, CONTROL LEVER .COUVERCLE	1					WITHOUT PT/T SW. WITHOUT PT/T SW.
	703–82563–02	.TRIM & TILT SWITCH ASSY .INCLINER ET PARER COMMUTATEUR	1					FOR 703-48250-17 FOR 703-48250-17
	703–82563–12	.TRIM & TILT SWITCH ASSY .INCLINER ET PARER COMMUTATEUR	1					FOR 703-48272-17 FOR 703-48272-17
56	703–48221–00	.LEVER, CONTROL .LEVIER, COMMANDE	1					
57	703–48152–00	.KNOB, FREE ACCEL. .BOUTON	1					
58	703–48212–00	.BACK PLATE 1 .PLAQUETTE 1	1					
59	703–48213–00	.BACK PLATE 2 .PLAQUETTE 2	1					
60	703–48271–00	.ARM, SHIFT .BRAS	1					
61	703–48211–01	.HOUSING,1 .CORPS	1					
62	703–48232–00	.GEAR .PIGNON	1					
63	703–82542–00	.CAP .COUVERCLE	2					FOR 703-48210-16 FOR 703-48210-16
64	702–48287–00	.WASHER .RONDELLE	3					FOR TWIN FOR TWIN
65	703–48216–00	.GRAPHIC .ADHESIF 2 GAUCHE	1					FOR 703-48204-13 FOR 703-48204-13
66	703–48216–10	.GRAPHIC .ADHESIF 2 GAUCHE	1					FOR 703-48204-13 FOR 703-48204-13

703 REMOTE CONTROL (PUSH TO OPEN TYPE)

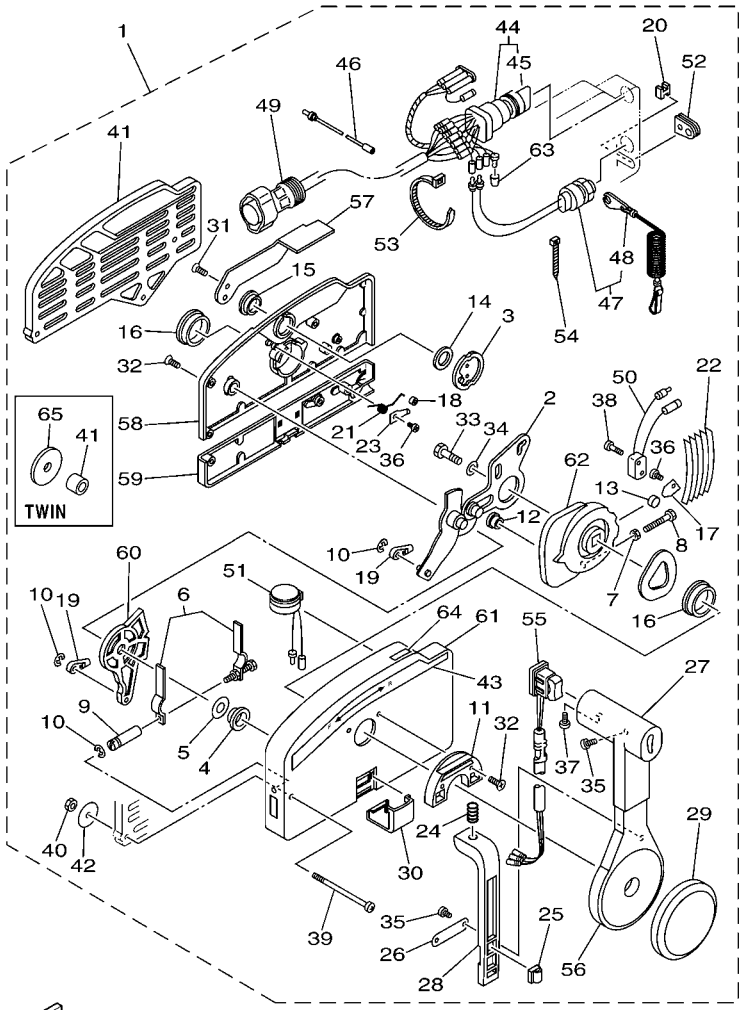

6011100-G080

*1: FOR 703-48201-16/ 703-48205-17/ 703-48207-17
*2: FOR 703-48201-A3/ 703-48205-A5/ 703-48207-A5/ 703-48208-A4
*3: FOR 703-48202-15/ 703-48203-15
*4: FOR 703-48201-16/ 703-48202-15/ 703-48203-15/ 703-48205-17/ 703-48207-17
*5: FOR 703-48201-A3/ 703-48203-A3/ 703-48205-A5/ 703-48207-A5/ 703-48208-A4
*6: FOR 703-48201-A3/ 703-48208-A4
*7: FOR 703-48203-A3/ 703-48205-A5/ 703-48207-A5

FIG. 8 REMOTE CONTROL ASSY 4 BOITIER DE COMMANDE A DISTANCE

REF. NO.	PART NO. N° PIECES	DESCRIPTION DESCRIPTION	602R					REMARKS REMARQUES
1	703–48201–16	REMOTE CONTROL ASSY (10P) BOITIER DE COMMANDE A DISTANCE	1					UR WITHOUT PT/T SW. UR WITHOUT PT/T SW.
	703–48201–A3	REMOTE CONTROL ASSY (10P) BOITIER DE COMMANDE A DISTANCE	1					UR WITHOUT PT/T SW. UR WITHOUT PT/T SW.
	703–48202–15	REMOTE CONTROL ASSY (7P) BOITIER DE COMMANDE A DISTANCE	1					UR FOR TWIN UR FOR TWIN
	703–48203–15	REMOTE CONTROL ASSY (7P) BOITIER DE COMMANDE A DISTANCE	1					UR WITHOUT PT/T SW. UR WITHOUT PT/T SW.
	703–48203–A3	REMOTE CONTROL ASSY (7P) BOITIER DE COMMANDE A DISTANCE	1					UR WITHOUT PT/T SW. UR WITHOUT PT/T SW.
	703–48205–17	REMOTE CONTROL ASSY (10P) BOITIER DE COMMANDE A DISTANCE	1					UR WITH PT/T SW. UR WITH PT/T SW.
	703–48205–A5	REMOTE CONTROL ASSY (10P) BOITIER DE COMMANDE A DISTANCE	1					UR WITH PT/T SW. UR WITH PT/T SW.
	703–48207–17	REMOTE CONTROL ASSY (10P) BOITIER DE COMMANDE A DISTANCE	1					UR WITH PT/T SW. UR WITH PT/T SW.
	703–48207–A5	REMOTE CONTROL ASSY (10P) BOITIER DE COMMANDE A DISTANCE	1					UR WITH PT/T SW. UR WITH PT/T SW.
	703–48208–A4	REMOTE CONTROL ASSY (10P) BOITIER DE COMMANDE A DISTANCE	1					UR FOR TWIN UR FOR TWIN
2	703–48261–01	.ARM, THROTTLE .BRAS, ACCELERATION	1					
3	703–48153–00	.SHAFT, FREE ACCEL. .AXE	1					
4	703–48235–00	.BUSHING .COUSSINET	1					
5	703–48268–00	.SPACER .ENTRETOISE	1					
6	703–48264–00	.FRICTION, THROTTLE .FRICTION, ACCELERATION	1					
7	95380–05600	.NUT .ECROU	1					
8	97380–05025	.BOLT .BOULON, HEXAGONAL	1					
9	703–48265–00	.SHAFT, FRICTION .AXE, COPILOTE	1					
10	93430–06024	.CIRCLIP .CLIPS	3					
11	703–48245–00	.PLATE, LOCK .PLAQUE, VERROU	1					
12	703–48252–00	.ROLLER, CAM .POULIE	1					
13	701–48248–00	.ROLLER, FREE ACCEL. .POULIE	1					
14	703–48198–00	.WASHER, WAVE .RONDELLE, ELASTIQUE ONDULEE	1					
15	703–48243–00	.BUSHING .COUSSINET	1					
16	703–48236–00	.BUSHING 1 .POULIE	2					
17	703–48189–00	.RETAINER .FLASQUE	1					
18	703–48234–00	.ROLLER, DETENT .POULIE	1					

703 REMOTE CONTROL (PUSH TO OPEN TYPE)

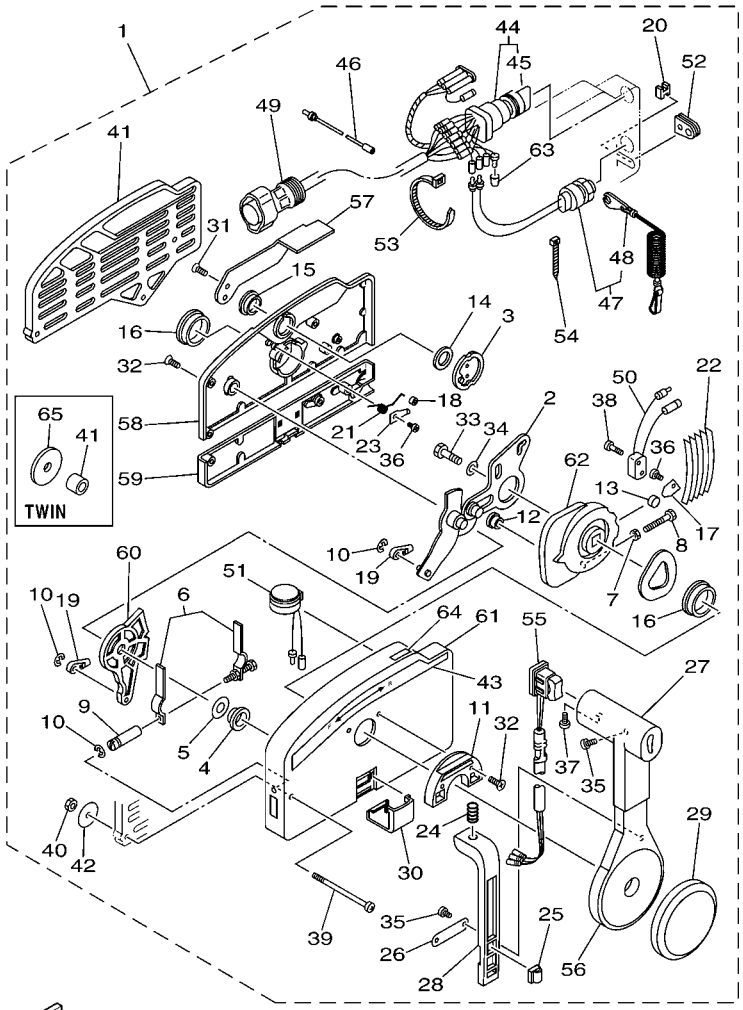

6011100-G080

*1: FOR 703-48201-16/ 703-48205-17/ 703-48207-17
*2: FOR 703-48201-A3/ 703-48205-A5/ 703-48207-A5/ 703-48208-A4
*3: FOR 703-48202-15/ 703-48203-15
*4: FOR 703-48201-16/ 703-48202-15/ 703-48203-15/ 703-48205-17/ 703-48207-17
*5: FOR 703-48201-A3/ 703-48203-A3/ 703-48205-A5/ 703-48207-A5/ 703-48208-A4
*6: FOR 703-48201-A3/ 703-48208-A4
*7: FOR 703-48203-A3/ 703-48205-A5/ 703-48207-A5

FIG. 8 REMOTE CONTROL ASSY 4 BOITIER DE COMMANDE A DISTANCE

REF. NO.	PART NO. N° PIECES	DESCRIPTION DESCRIPTION	602R					REMARKS REMARQUES
19	703–48345–01	.CABLE END, REMOTE CONTROL 2 .CHAPE CABLE	2					
20	703–48358–00	.ANCHOR, CABLE .COLLIER	1					
21	703–48244–00	.SPRING, FREE ACCEL. .RESSORT	1					
22	703–48238–00	.SPRING, DETENT .RESSORT	5					
23	703–48246–00	.SPACER .ENTRETOISE	1					
24	703–48227–00	.SPRING, NEUTRAL LOCK .RESSORT	1					
25	703–82594–00	.CLAMP .BRIDE	1					WITH PT/T SW. WITH PT/T SW.
26	703–48226–00	.PLATE, STOPPER .PLAQUETTE	1					
27	703–48222–00	.GRIP, CONTROL LEVER .POIGNEE, COMMANDE LEVIER	1					FOR SINGLE FOR SINGLE
	703–48222–10	.GRIP, CONTROL LEVER .POIGNEE, COMMANDE LEVIER	1					FOR TWIN FOR TWIN
28	703–48223–00	.LOCK, NEUTRAL .VERROU, NEUTRAL	1					
29	703–48225–00	.COVER .COUVERCLE	1					
30	703–48219–00	.COVER, LEAD .COUVERCLE	1					
31	703–48281–00	.SCREW .VIS	2					
32	703–48282–00	.SCREW .VIS	7					
33	97380–08030	.BOLT .BOULON, HEXAGONAL	1					
34	92990–08600	.WASHER, PLATE .RONDELLE, PLATE	1					
35	98580–04010	.SCREW, PAN HEAD .VIS	3					FOR SINGLE FOR SINGLE
	98580–04010	.SCREW, PAN HEAD .VIS	2					FOR TWIN FOR TWIN
36	98580–04006	.SCREW, PAN HEAD .VIS	2					
37	98580–05010	.SCREW, PAN HEAD .VIS	1					
38	98580–03015	.SCREW, PAN HEAD .VIS	2					
39	703–48291–10	.SCREW (M6) .VIS (M6)	3					
40	95380–06600	.NUT, HEXAGON .ECROU	3					
41	703–48293–10	.SPACER, REMOTE CONTROL .ENTRETOISE	1					FOR SINGLE FOR SINGLE
	703–48293–00	.SPACER, REMOTE CONTROL .ENTRETOISE	3					FOR TWIN FOR TWIN
42	701–48287–00	.WASHER .RONDELLE	3					

703 REMOTE CONTROL (PUSH TO OPEN TYPE)

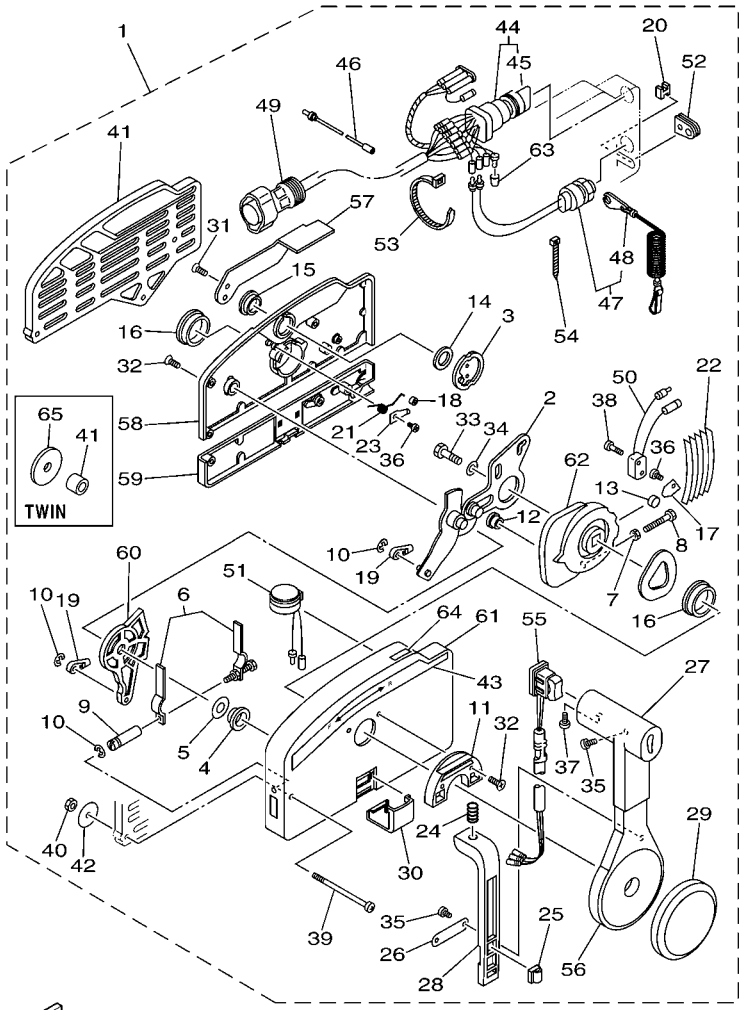

6011100-G080

*1: FOR 703-48201-16/ 703-48205-17/ 703-48207-17
*2: FOR 703-48201-A3/ 703-48205-A5/ 703-48207-A5/ 703-48208-A4
*3: FOR 703-48202-15/ 703-48203-15
*4: FOR 703-48201-16/ 703-48202-15/ 703-48203-15/ 703-48205-17/ 703-48207-17
*5: FOR 703-48201-A3/ 703-48203-A3/ 703-48205-A5/ 703-48207-A5/ 703-48208-A4
*6: FOR 703-48201-A3/ 703-48208-A4
*7: FOR 703-48203-A3/ 703-48205-A5/ 703-48207-A5

FIG. 8 REMOTE CONTROL ASSY 4 BOITIER DE COMMANDE A DISTANCE

REF. NO.	PART NO. N° PIECES	DESCRIPTION DESCRIPTION	602R					REMARKS REMARQUES
43	703–48215–00	.GRAPHIC .ADHESIF	1					
44	703–82510–43	.MAIN SWITCH ASSY .CONTACTEUR A CLEF COMPLET	1					*1 *1
	703–82510–12	.MAIN SWITCH ASSY .CONTACTEUR A CLEF COMPLET	1					*2 *2
	703–82510–33	.MAIN SWITCH ASSY .CONTACTEUR A CLEF COMPLET	1					*3 *3
	703–82510–03	.MAIN SWITCH ASSY .CONTACTEUR A CLEF COMPLET	1					FOR 703-48203-A3 FOR 703-48203-A3
45	703–82577–00	..CAP, KEY ..CABOCHON	1					FOR 703-82510-33/43 FOR 703-82510-33/43
	676–82577–00	..CAP, KEY ..CABOCHON	1					FOR 703-82510-03/12 FOR 703-82510-03/12
46	703–82531–00	.WIRE, LEAD (L70) .FIL (L70)	1					
47	688–82575–01	.ENGINE STOP SWITCH ASSY .COUPE CIRCUIT CPLT	1					
48	682–82556–00	..LANYARD, STOP SWITCH ..PLAQUETTE	1					
49	688–8258A–20	.EXTENSION, WIRE HARNESS (4.9M) .EXTENSION, FAISCEAU DE FILS (4	1					(10P) (10P)
	688–82586–21	.EXTENSION, WIRE HARNESS (4.9M) .EXTENSION, FAISCEAU DE FILS (4	1					(7P) (7P)
50	703–82540–00	.NEUTRAL SWITCH ASSY .CONTACTEUR DE POINT-MORT	1					
51	703–83383–02	.BUZZER .RONFLEUR	1					*4 *4
	703–83383–B0	.BUZZER .RONFLEUR	1					*5 *5
52	703–48284–00	.GROMMET .PASSE-FIL	1					
	703–48284–10	.GROMMET .PASSE-FIL	1					FOR 703-48207-17/A5 FOR 703-48207-17/A5
53	703–82591–00	.BAND .COLLIER	1					
	703–82591–00	.BAND .COLLIER	3					FOR 703-48207-17/A5 FOR 703-48207-17/A5
54	703–82592–00	.BAND .COLLIER	1					
55	703–48224–00	.COVER, CONTROL LEVER .COUVERCLE	1					WITHOUT PT/T SW. WITHOUT PT/T SW.
	703–82563–02	.TRIM & TILT SWITCH ASSY .INCLINER ET PARER COMMUTATEUR	1					FOR 703-48205-17/A5 FOR 703-48205-17/A5
	703–82563–12	.TRIM & TILT SWITCH ASSY .INCLINER ET PARER COMMUTATEUR	1					FOR 703-48207-17/A5 FOR 703-48207-17/A5
56	703–48221–00	.LEVER, CONTROL .LEVIER, COMMANDE	1					
57	703–48152–00	.KNOB, FREE ACCEL. .BOUTON	1					
58	703–48212–00	.BACK PLATE 1 .PLAQUETTE 1	1					
59	703–48213–00	.BACK PLATE 2 .PLAQUETTE 2	1					

703 REMOTE CONTROL (PUSH TO OPEN TYPE)

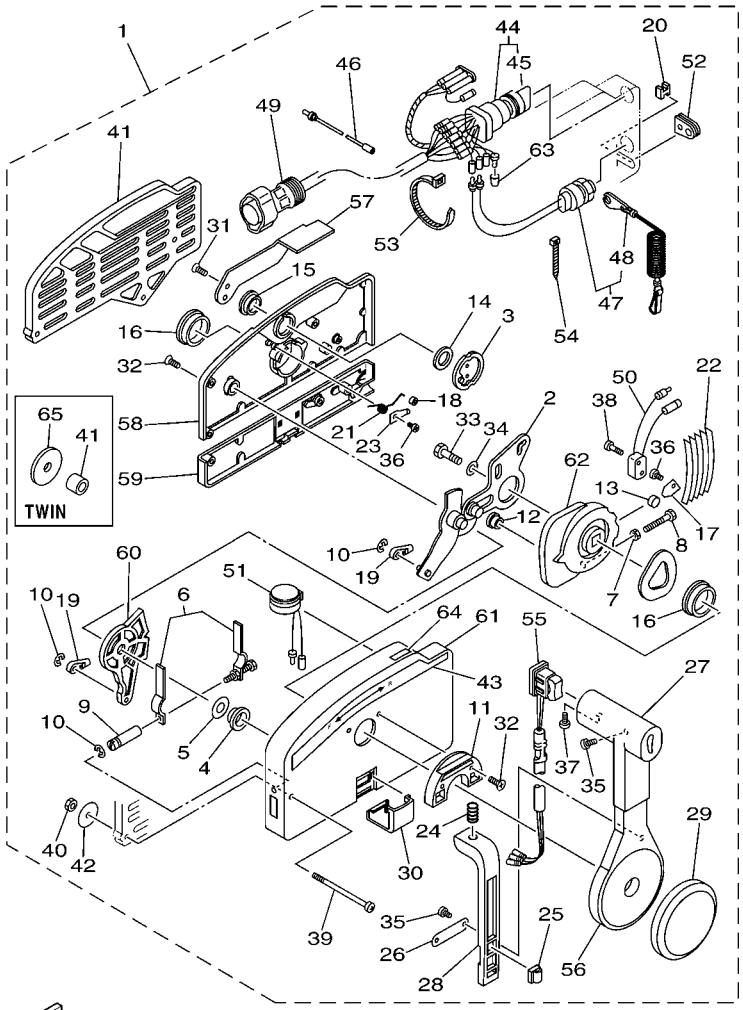

6011100-G080

*1: FOR 703-48201-16/ 703-48205-17/ 703-48207-17
*2: FOR 703-48201-A3/ 703-48205-A5/ 703-48207-A5/ 703-48208-A4
*3: FOR 703-48202-15/ 703-48203-15
*4: FOR 703-48201-16/ 703-48202-15/ 703-48203-15/ 703-48205-17/ 703-48207-17
*5: FOR 703-48201-A3/ 703-48203-A3/ 703-48205-A5/ 703-48207-A5/ 703-48208-A4
*6: FOR 703-48201-A3/ 703-48208-A4
*7: FOR 703-48203-A3/ 703-48205-A5/ 703-48207-A5

FIG. 8 REMOTE CONTROL ASSY 4 BOITIER DE COMMANDE A DISTANCE

REF. NO.	PART NO. N° PIECES	DESCRIPTION DESCRIPTION	602R					REMARKS REMARQUES
60	703–48271–00	.ARM, SHIFT .BRAS	1					
61	703–48211–01	.HOUSING,1 .CORPS	1					
62	703–48232–00	.GEAR .PIGNON	1					
63	703–82542–00	.CAP .COUVERCLE	2					FOR 703-48201-16 FOR 703-48201-16
	703–82542–00	.CAP .COUVERCLE	3					*6 *6
	703–82542–00	.CAP .COUVERCLE	1					*7 *7
64	703–48218–00	.GRAPHIC .ADHESIF	1					*5 *5
65	702–48287–00	.WASHER .RONDELLE	3					FOR TWIN FOR TWIN

704 REMOTE CONTROL (STANDARD SINGLE)

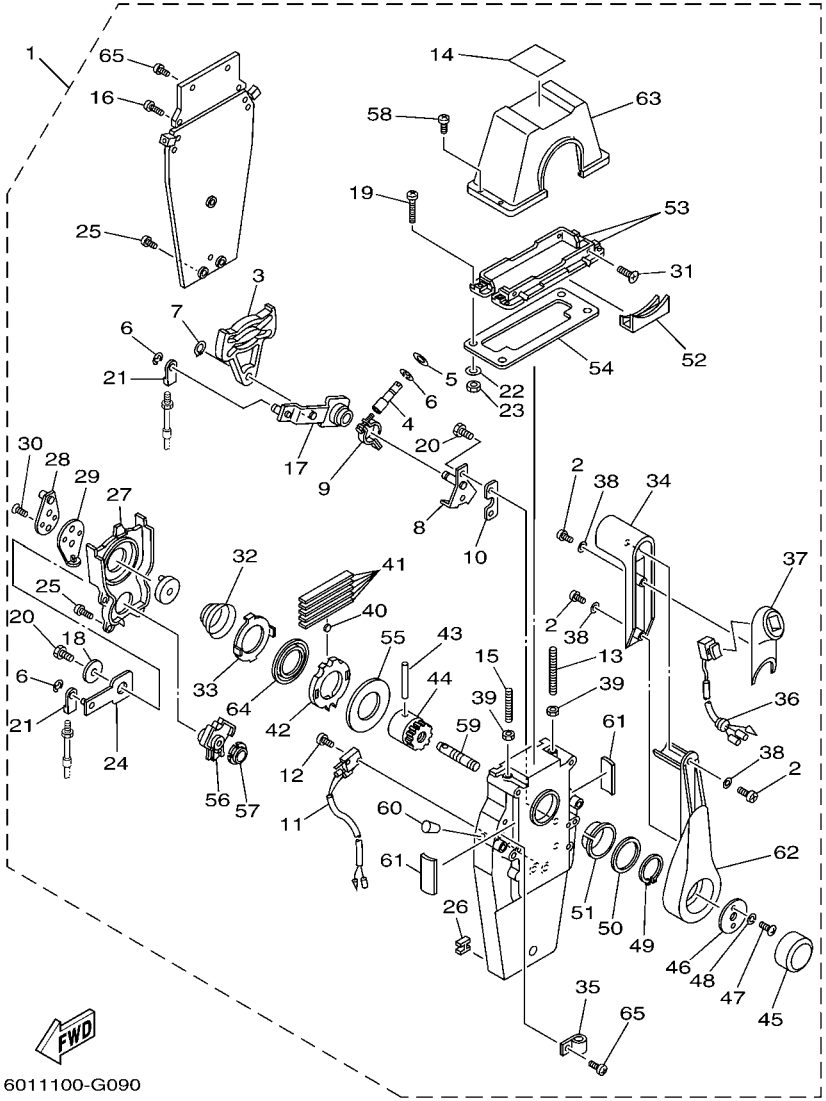

FIG. 9 REMOTE CONTROL ASSY 5 BOITIER DE COMMANDE A DISTANCE

REF. NO.	PART NO. N° PIECES	DESCRIPTION DESCRIPTION	602R					REMARKS REMARQUES
1	704–48205–B1	REMOTE CONTROL ASSY BOITIER DE COMMANDE A DISTANCE	1					WITH PT/T SW. WITH PT/T SW.
2	704–48128–00	.SCREW 2 .VIS 2	3					
3	EL8–48251–00	.PLATE, CAM .PLAQUE, CAME	1					
4	704–48265–00	.SHAFT, FRICTION .AXE, COPILOTE	1					
5	701–48246–00	.SPACER .ENTRETOISE	1					
6	93430–06024	.CIRCLIP .CLIPS	4					
7	EL8–48259–00	.CIRCLIP 1 .CIRCLIP	1					
8	704–48262–00	.SHAFT, THROTTLE .AXE, ACCELERATION	1					
9	704–48264–00	.THROTTLE, FRICTION .FRICTION, ACCELERATION	1					
10	704–48266–00	.SPACER .ENTRETOISE	1					
11	704–82540–20	.NEUTRAL SWITCH ASSY .CONTACTEUR DE POINT-MORT	1					
12	6A5–48129–10	.SCREW 3 .VIS 3	2					
13	EL8–48281–00	.SCREW .VIS	1					
14	704–48215–00	.GRAPHIC .ADHESIF	1					
15	704–48281–00	.SCREW .VIS	1					
16	97890–05025	.SCREW, PAN HEAD .VIS, CRUCIFORME	2					
17	704–48261–00	.ARM, THROTTLE .BRAS, ACCELERATION	1					
18	EL8–48191–00	.WASHER 1 .RONDELLE	1					
19	704–48283–00	.SCREW .VIS	4					
20	97380–06018	.BOLT .BOULON, HEXAGONAL	3					
21	703–48345–01	.CABLE END, REMOTE CONTROL 2 .CHAPE CABLE	2					
22	704–48287–00	.WASHER .RONDELLE	4					
23	95380–05600	.NUT .ECROU	4					
24	EL8–48271–10	.ARM, SHIFT .BRAS	1					
25	EL8–48127–00	.SCREW 1 .VIS 1	9					
26	703–48358–00	.ANCHOR, CABLE .COLLIER	1					
27	EL8–48231–00	.HOUSING, GEAR .CARTER, ENGRENAGE	1					

704 REMOTE CONTROL (STANDARD SINGLE)

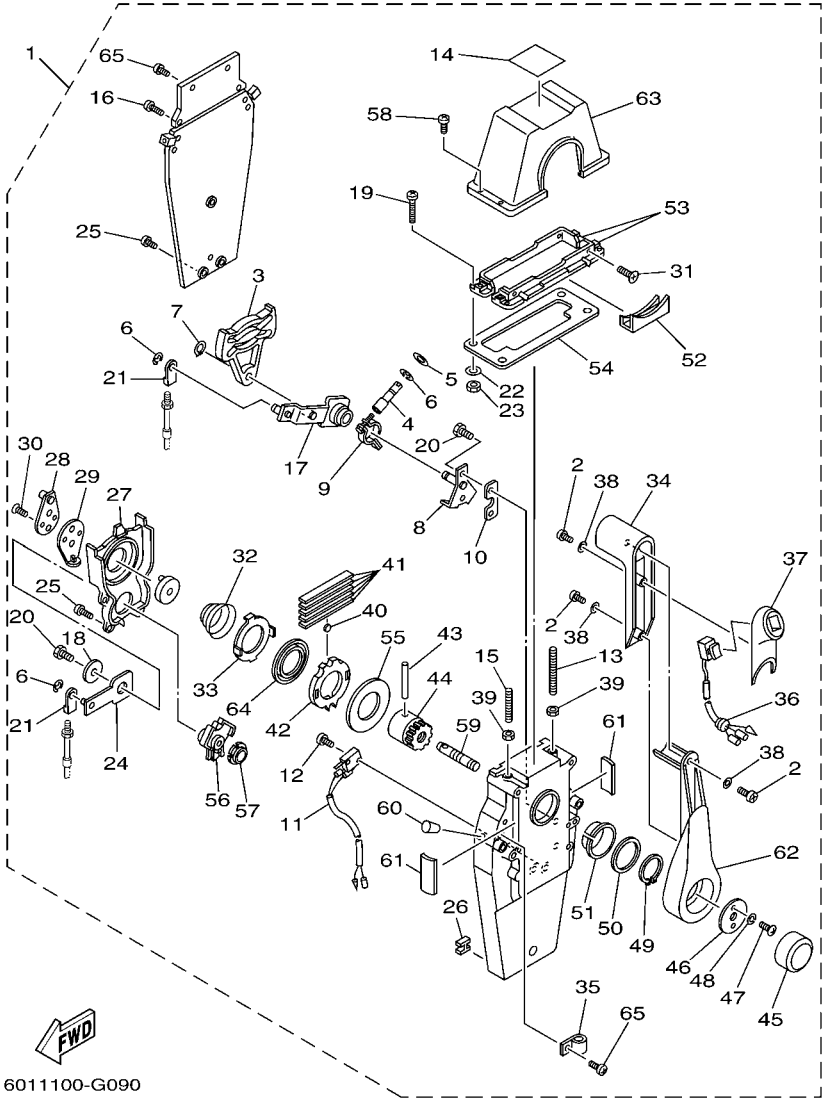

FIG. 9 REMOTE CONTROL ASSY 5 BOITIER DE COMMANDE A DISTANCE

REF. NO.	PART NO. N° PIECES	DESCRIPTION DESCRIPTION	602R					REMARKS REMARQUES
28	EL8–48241–10	.ARM, DRIVE .BRAS, COMMANDE	1					
29	EL8–48254–10	.STOPPER, THROTTLE ADJUST .BUTEE	1					
30	92780–06020	.SCREW, FLAT HEAD .VIS A TETE FRAISEE	2					
31	98780–05018	.SCREW, FLAT HEAD .VIS A TETE FRAISEE	4					
32	EL8–48244–00	.SPRING, FREE ACCEL. .RESSORT	1					
33	EL8–48245–00	.PLATE, LOCK .PLAQUE, VERROU	1					
34	704–48222–B0	.GRIP, CONTROL LEVER .POIGNEE, COMMANDE LEVIER	1					
35	704–82594–00	.CLAMP .BRIDE	1					
36	704–82563–41	.TRIM & TILT SWITCH ASSY .INCLINER ET PARER COMMUTATEUR	1					
37	704–48229–B1	.GRIP, CONTROL LEVER .POIGNEE, COMMANDE LEVIER	1					
38	92990–05300	.WASHER, INTERNAL TOOTH .RONDELLE, DENTURE INTERNE	3					
39	95380–06600	.NUT, HEXAGON .ECROU	2					
40	701–48248–00	.ROLLER, FREE ACCEL. .POULIE	1					
41	704–48238–00	.SPRING, DETENT .RESSORT	5					
42	EL8–48232–00	.GEAR 1 .PIGNON	1					
43	EL8–48164–00	.PIN 2 .PION 2	1					
44	704–48242–00	.SHAFT, DRIVE .ARBRE, MOTEUR	1					
45	6X3–48225–20	.COVER .COUVERCLE	1					
46	704–48192–00	.WASHER 2 .RONDELLE 2	1					
47	97890–06018	.SCREW, PAN HEAD .VIS, CRUCIFORME	2					
48	92990–06300	.WASHER, INTERNAL TOOTH .RONDELLE, DENTURE INTERNE	2					
49	EL8–48279–00	.CIRCLIP 2 .CIRCLIP 2	1					
50	704–48193–00	.WASHER 3 .RONDELLE 3	1					
51	EL8–48234–00	.BUSHING 1 .POULIE	1					
52	704–48219–B0	.COVER, LEAD .COUVERCLE	1					
53	704–48144–00	.PLATE, STOPPER 2 .PLAQUETTE 2	2					
54	704–48176–00	.GROMMET .PASSE-FIL	1					

FIG. 9 REMOTE CONTROL ASSY 5 BOITIER DE COMMANDE A DISTANCE

704 REMOTE CONTROL (STANDARD SINGLE)

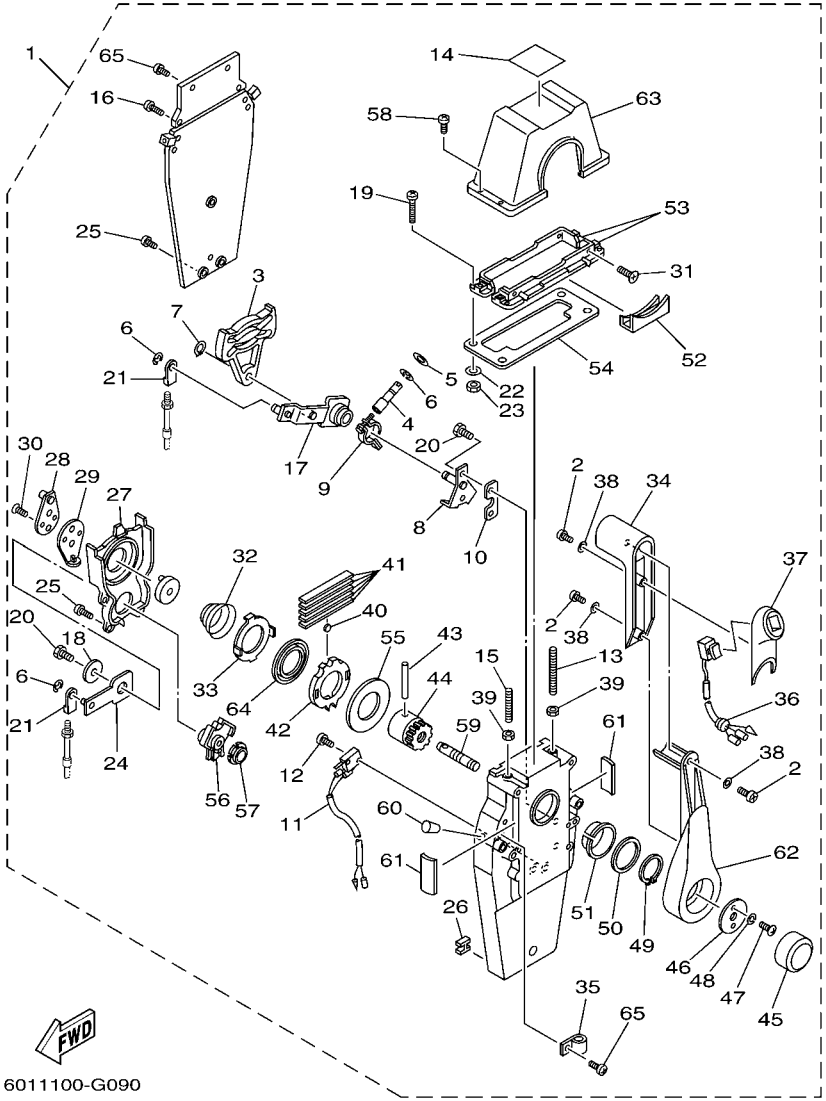

REF. NO.	PART NO. N° PIECES	DESCRIPTION DESCRIPTION	602R					REMARKS REMARQUES
55	703–48192–00	.WASHER 2 .RONDELLE 2	1					
56	EL8–48233–00	.GEAR 2 .PIGNON 2	1					
57	702–48235–00	.BUSHING .COUSSINET	1					
58	704–48282–00	.SCREW .VIS	4					
59	704–48153–00	.SHAFT, FREE ACCEL. .AXE	1					
60	704–48166–00	.PLUG .BOUCHON	1					
61	704–48284–00	.GROMMET .PASSE-FIL	2					
62	704–48221–B0	.LEVER, CONTROL .LEVIER, COMMANDE	1					
63	704–48119–B0	.COVER .COQUILLE	1					
64	704–48178–10	.PLATE, SHIFT .PLAQUETTE	1					
65	97890–05016	.SCREW, PAN HEAD .VIS, CRUCIFORME	3					

704 REMOTE CONTROL (PREMIUM SINGLE)

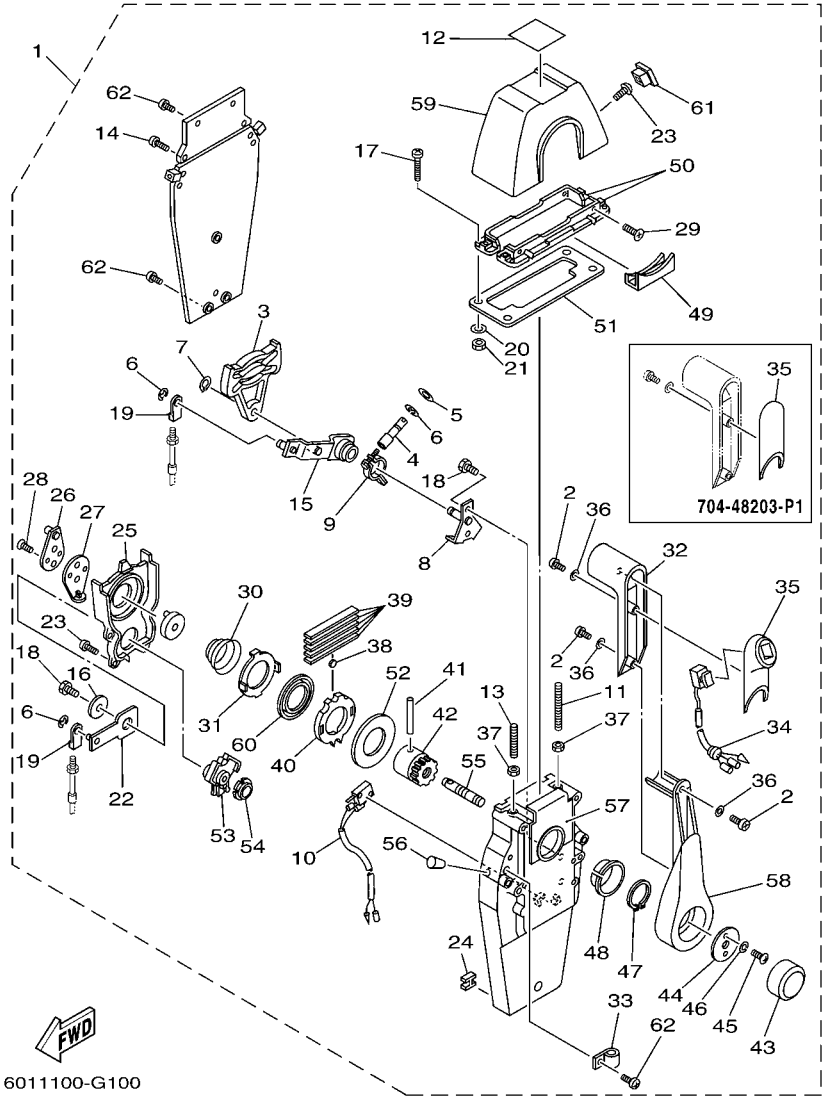

FIG. 10 REMOTE CONTROL ASSY 6 BOITIER DE COMMANDE A DISTANCE

REF. NO.	PART NO. N° PIECES	DESCRIPTION DESCRIPTION	602R					REMARKS REMARQUES
1	704–48203–P1	REMOTE CONTROL ASSY (RIGHT) BOITIER DE COMMANDE A DISTANCE	1					UR WITHOUT PT/T SW. UR WITHOUT PT/T SW.
	704–48205–P1	REMOTE CONTROL ASSY (RIGHT) BOITIER DE COMMANDE A DISTANCE	1					UR WITH PT/T SW. UR WITH PT/T SW.
	704–48206–P1	REMOTE CONTROL ASSY (LEFT) BOITIER DE COMMANDE A DISTANCE	1					UR WITH PT/T SW. UR WITH PT/T SW.
2	704–48128–00	.SCREW 2 .VIS 2	3					
3	EL8–48251–00	.PLATE, CAM .PLAQUE, CAME	1					
4	704–48265–00	.SHAFT, FRICTION .AXE, COPILOTE	1					
5	701–48246–00	.SPACER .ENTRETOISE	1					
6	93430–06024	.CIRCLIP .CLIPS	4					
7	EL8–48259–00	.CIRCLIP 1 .CIRCLIP	1					
8	704–48262–00	.SHAFT, THROTTLE .AXE, ACCELERATION	1					
9	704–48264–00	.THROTTLE, FRICTION .FRICTION, ACCELERATION	1					
10	704–82540–20	.NEUTRAL SWITCH ASSY .CONTACTEUR DE POINT-MORT	1					
11	EL8–48281–00	.SCREW .VIS	1					
12	704–48215–20	.GRAPHIC .ADHESIF	1					
13	704–48281–00	.SCREW .VIS	1					
14	97890–05025	.SCREW, PAN HEAD .VIS, CRUCIFORME	2					
15	704–48261–00	.ARM, THROTTLE .BRAS, ACCELERATION	1					
16	EL8–48191–00	.WASHER 1 .RONDELLE	1					
17	704–48283–00	.SCREW .VIS	4					
18	97380–06018	.BOLT .BOULON, HEXAGONAL	3					
19	703–48345–01	.CABLE END, REMOTE CONTROL 2 .CHAPE CABLE	2					
20	704–48287–00	.WASHER .RONDELLE	4					
21	95380–05600	.NUT .ECROU	4					
22	704–48271–00	.ARM, SHIFT .BRAS	1					
23	EL8–48127–00	.SCREW 1 .VIS 1	10					
24	703–48358–00	.ANCHOR, CABLE .COLLIER	1					
25	704–48231–00	.HOUSING, GEAR .CARTER, ENGRENAGE	1					

704 REMOTE CONTROL (PREMIUM SINGLE)

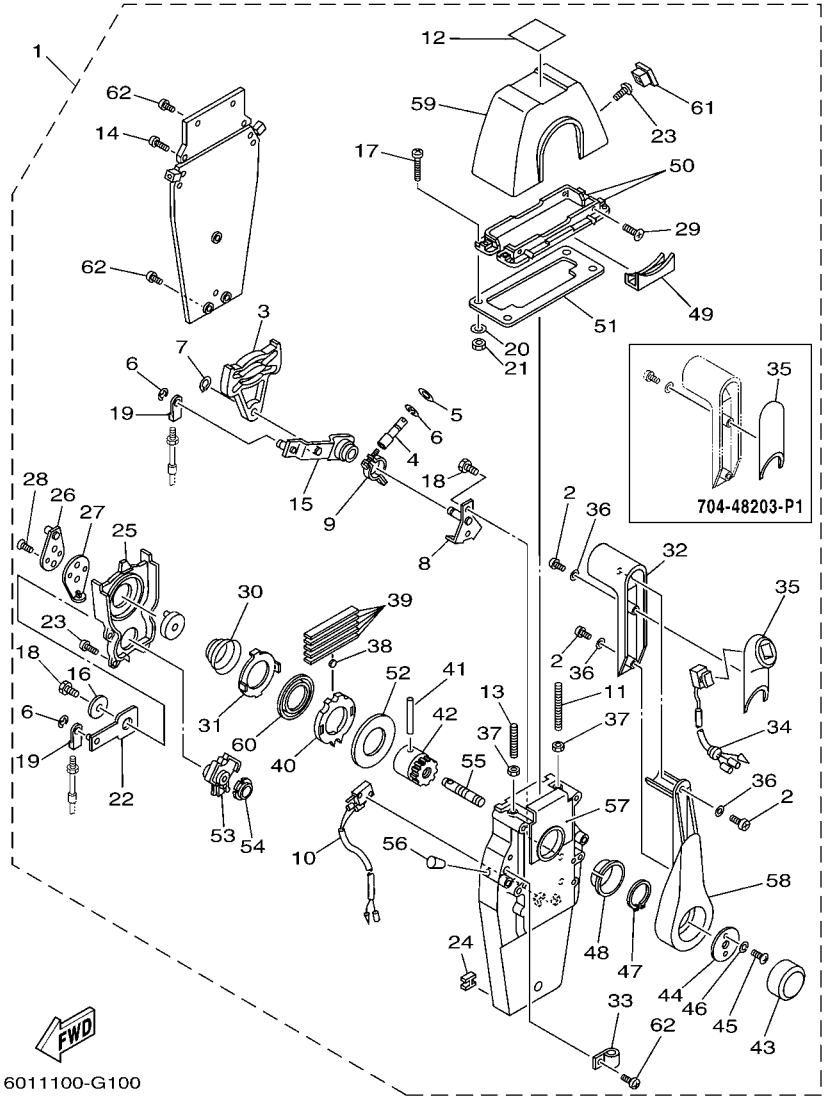

FIG. 10 REMOTE CONTROL ASSY 6 BOITIER DE COMMANDE A DISTANCE

REF. NO.	PART NO. N° PIECES	DESCRIPTION DESCRIPTION	602R					REMARKS REMARQUES
26	EL8–48241–00	.ARM, DRIVE .BRAS, COMMANDE	1					
27	EL8–48254–00	.STOPPER, THROTTLE ADJUSTING .BUTEE	1					
28	92780–06020	.SCREW, FLAT HEAD .VIS A TETE FRAISEE	2					
29	98780–05018	.SCREW, FLAT HEAD .VIS A TETE FRAISEE	4					
30	EL8–48244–00	.SPRING, FREE ACCEL. .RESSORT	1					
31	EL8–48245–00	.PLATE, LOCK .PLAQUE, VERROU	1					
32	704–48222–P0	.GRIP, CONTROL LEVER .POIGNEE, COMMANDE LEVIER	1					
33	704–82594–00	.CLAMP .BRIDE	1					
34	704–82563–41	.TRIM & TILT SWITCH ASSY .INCLINER ET PARER COMMUTATEUR	1					WITH PT/T SW. WITH PT/T SW.
35	704–48229–R0	.GRIP, CONTROL LEVER .POIGNEE, COMMANDE LEVIER	1					WITHOUT PT/T SW. WITHOUT PT/T SW.
	704–48229–P1	.GRIP, CONTROL LEVER .POIGNEE, COMMANDE LEVIER	1					WITH PT/T SW. WITH PT/T SW.
36	92990–05300	.WASHER, INTERNAL TOOTH .RONDELLE, DENTURE INTERNE	3					
37	95380–06600	.NUT, HEXAGON .ECROU	2					
38	701–48248–00	.ROLLER, FREE ACCEL. .POULIE	1					
39	704–48238–00	.SPRING, DETENT .RESSORT	5					
40	704–48232–P1	.GEAR .PIGNON	1					
41	EL8–48164–00	.PIN 2 .PION 2	1					
42	704–48242–10	.SHAFT, DRIVE .ARBRE, MOTEUR	1					
43	6X3–48225–20	.COVER .COUVERCLE	1					
44	704–48192–00	.WASHER 2 .RONDELLE 2	1					
45	97890–06018	.SCREW, PAN HEAD .VIS, CRUCIFORME	2					
46	92990–06300	.WASHER, INTERNAL TOOTH .RONDELLE, DENTURE INTERNE	2					
47	EL8–48279–00	.CIRCLIP 2 .CIRCLIP 2	1					
48	704–48234–00	.BUSHING 1 .POULIE	1					
49	704–48219–P0	.COVER, LEAD .COUVERCLE	1					
50	704–48144–10	.PLATE, STOPPER 2 .PLAQUETTE 2	2					
51	704–48176–00	.GROMMET .PASSE-FIL	1					

704 REMOTE CONTROL (PREMIUM SINGLE)

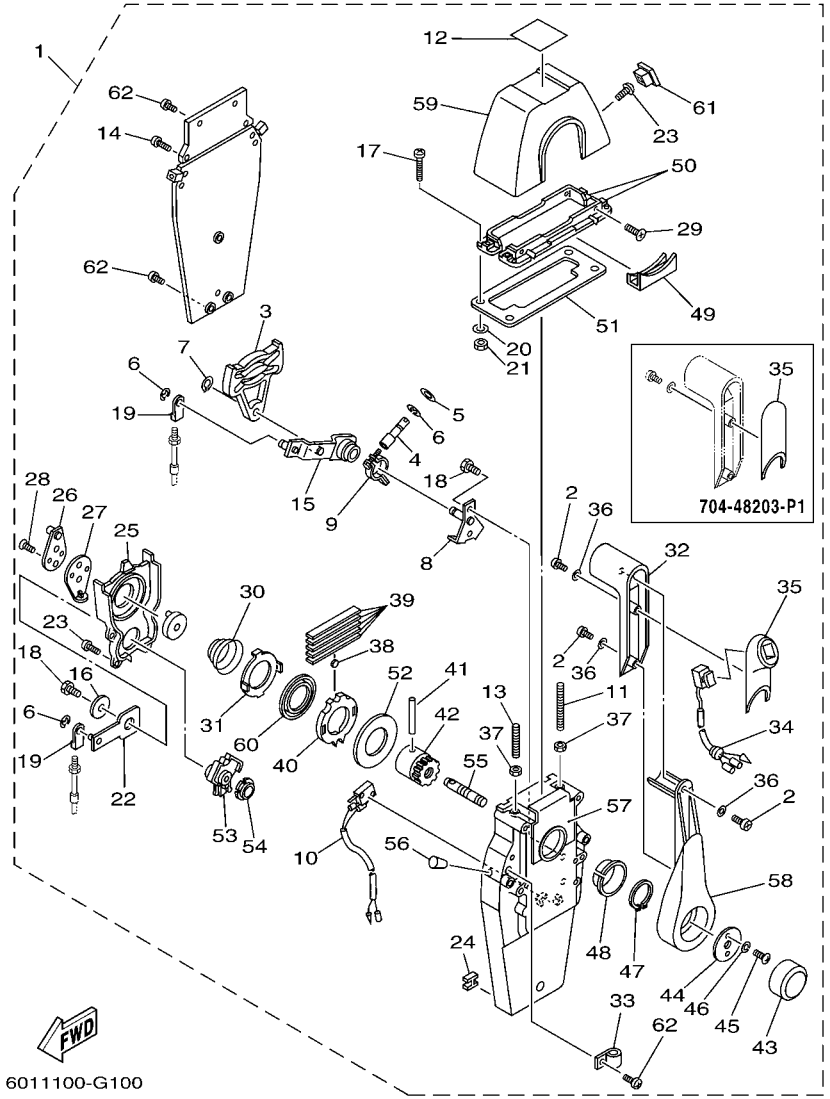

FIG. 10 REMOTE CONTROL ASSY 6 BOITIER DE COMMANDE A DISTANCE

REF. NO.	PART NO. N° PIECES	DESCRIPTION DESCRIPTION	602R					REMARKS REMARQUES
52	704–48192–P0	.WASHER 2 .RONDELLE 2	1					
53	704–48233–00	.GEAR 2 .PIGNON 2	1					
54	704–48235–00	.BUSHING .COUSSINET	1					
55	704–48153–00	.SHAFT, FREE ACCEL. .AXE	1					
56	704–48166–00	.PLUG .BOUCHON	1					
57	704–48284–P0	.GROMMET .PASSE-FIL	1					
58	704–48221–P0	.LEVER, CONTROL .LEVIER, COMMANDE	1					
59	704–48119–31	.COVER .COQUILLE	1					
60	704–48178–10	.PLATE, SHIFT .PLAQUETTE	1					
61	704–48167–01	.PLUG .BOUCHON	1					
62	97890–05016	.SCREW, PAN HEAD .VIS, CRUCIFORME	2					WITHOUT PT/T SW. WITHOUT PT/T SW.
	97890–05016	.SCREW, PAN HEAD .VIS, CRUCIFORME	3					WITH PT/T SW. WITH PT/T SW.

FIG. 11 REMOTE CONTROL ASSY 7 BOITIER DE COMMANDE A DISTANCE

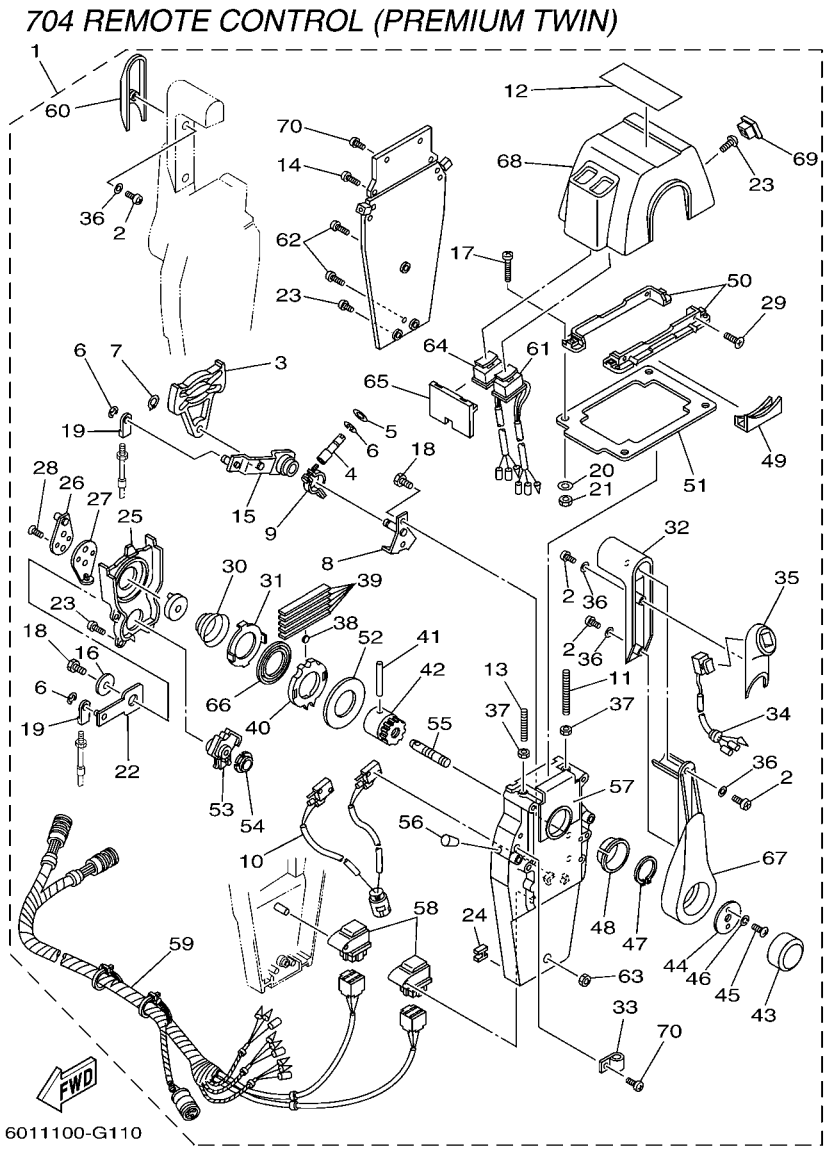

REF. NO.	PART NO. N° PIECES	DESCRIPTION DESCRIPTION	602R					REMARKS REMARQUES
1	704–48207–P1	REMOTE CONTROL ASSY BOITIER DE COMMANDE A DISTANCE	1					WITH PT/T SW. WITH PT/T SW.
2	704–48128–00	.SCREW 2 .VIS 2	6					
3	EL8–48251–00	.PLATE, CAM .PLAQUE, CAME	2					
4	704–48265–00	.SHAFT, FRICTION .AXE, COPILOTE	2					
5	701–48246–00	.SPACER .ENTRETOISE	2					
6	93430–06024	.CIRCLIP .CLIPS	8					
7	EL8–48259–00	.CIRCLIP 1 .CIRCLIP	2					
8	704–48262–00	.SHAFT, THROTTLE .AXE, ACCELERATION	2					
9	704–48264–00	.THROTTLE, FRICTION .FRICTION, ACCELERATION	2					
10	704–82540–30	.NEUTRAL SWITCH ASSY .CONTACTEUR DE POINT-MORT	1					
11	EL8–48281–00	.SCREW .VIS	2					
12	704–48215–30	.GRAPHIC .ADHESIF	1					
13	704–48281–00	.SCREW .VIS	2					
14	97890–05025	.SCREW, PAN HEAD .VIS, CRUCIFORME	4					
15	704–48261–00	.ARM, THROTTLE .BRAS, ACCELERATION	2					
16	EL8–48191–00	.WASHER 1 .RONDELLE	2					
17	704–48283–00	.SCREW .VIS	4					
18	97380–06018	.BOLT .BOULON, HEXAGONAL	6					
19	703–48345–01	.CABLE END, REMOTE CONTROL 2 .CHAPE CABLE	4					
20	704–48287–00	.WASHER .RONDELLE	4					
21	95380–05600	.NUT .ECROU	4					
22	704–48271–00	.ARM, SHIFT .BRAS	2					
23	EL8–48127–00	.SCREW 1 .VIS 1	18					
24	703–48358–00	.ANCHOR, CABLE .COLLIER	2					
25	704–48231–00	.HOUSING, GEAR .CARTER, ENGRENAGE	2					
26	EL8–48241–00	.ARM, DRIVE .BRAS, COMMANDE	2					
27	EL8–48254–00	.STOPPER, THROTTLE ADJUSTING .BUTEE	2					

FIG. 11 REMOTE CONTROL ASSY 7 BOITIER DE COMMANDE A DISTANCE

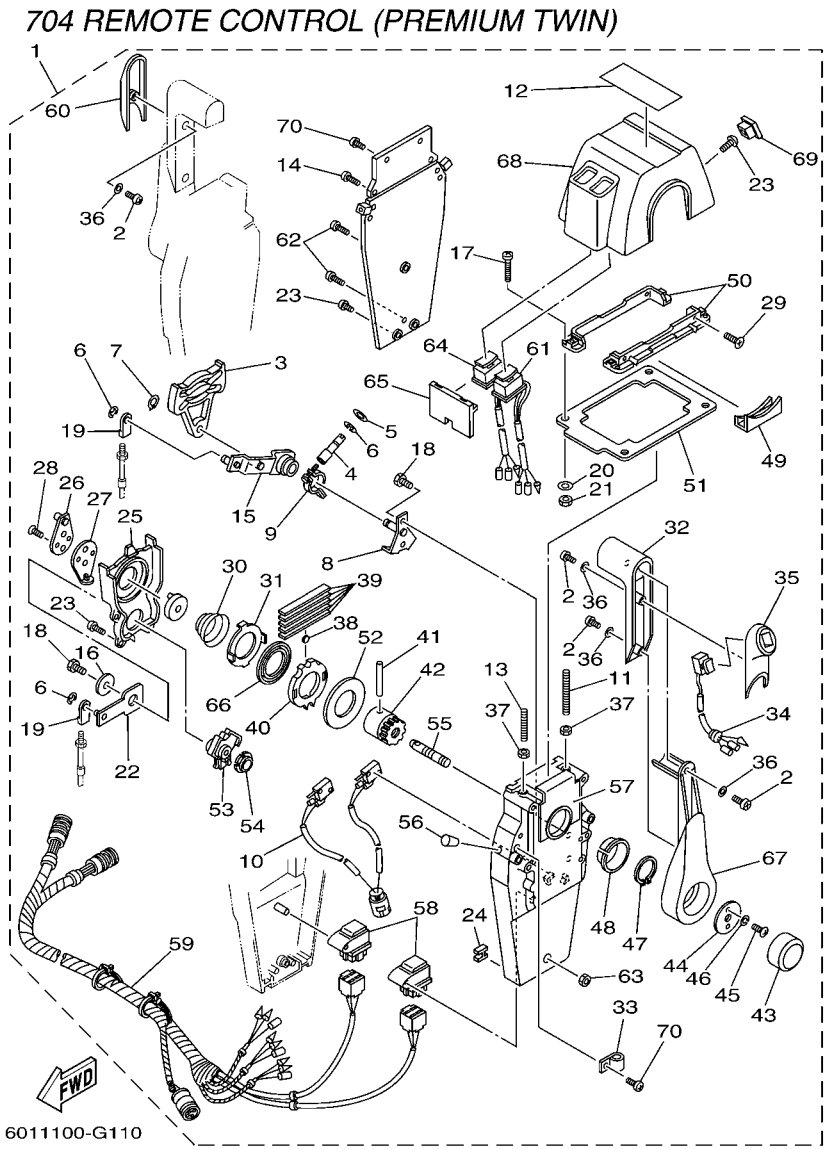

REF. NO.	PART NO. N° PIECES	DESCRIPTION DESCRIPTION	602R					REMARKS REMARQUES
28	92780–06020	.SCREW, FLAT HEAD .VIS A TETE FRAISEE	4					
29	98780–05018	.SCREW, FLAT HEAD .VIS A TETE FRAISEE	4					
30	EL8–48244–00	.SPRING, FREE ACCEL. .RESSORT	2					
31	EL8–48245–00	.PLATE, LOCK .PLAQUE, VERROU	2					
32	704–48222–P0	.GRIP, CONTROL LEVER .POIGNEE, COMMANDE LEVIER	2					
33	704–82594–00	.CLAMP .BRIDE	1					
34	704–82563–51	.TRIM & TILT SWITCH ASSY .INCLINER ET PARER COMMUTATEUR	1					
35	704–48229–P1	.GRIP, CONTROL LEVER .POIGNEE, COMMANDE LEVIER	1					
36	92990–05300	.WASHER, INTERNAL TOOTH .RONDELLE, DENTURE INTERNE	6					
37	95380–06600	.NUT, HEXAGON .ECROU	4					
38	701–48248–00	.ROLLER, FREE ACCEL. .POULIE	2					
39	704–48238–00	.SPRING, DETENT .RESSORT	10					
40	704–48232–P1	.GEAR .PIGNON	2					
41	EL8–48164–00	.PIN 2 .PION 2	2					
42	704–48242–10	.SHAFT, DRIVE .ARBRE, MOTEUR	2					
43	6X3–48225–20	.COVER .COUVERCLE	2					
44	704–48192–00	.WASHER 2 .RONDELLE 2	2					
45	97890–06018	.SCREW, PAN HEAD .VIS, CRUCIFORME	4					
46	92990–06300	.WASHER, INTERNAL TOOTH .RONDELLE, DENTURE INTERNE	4					
47	EL8–48279–00	.CIRCLIP 2 .CIRCLIP 2	2					
48	704–48234–00	.BUSHING 1 .POULIE	2					
49	704–48219–P0	.COVER, LEAD .COUVERCLE	2					
50	704–48144–20	.PLATE, STOPPER 2 .PLAQUETTE 2	2					
51	704–48176–10	.GROMMET .PASSE-FIL	1					
52	704–48192–P0	.WASHER 2 .RONDELLE 2	2					
53	704–48233–00	.GEAR 2 .PIGNON 2	2					
54	704–48235–00	.BUSHING .COUSSINET	2					

FIG. 11 REMOTE CONTROL ASSY 7 BOITIER DE COMMANDE A DISTANCE

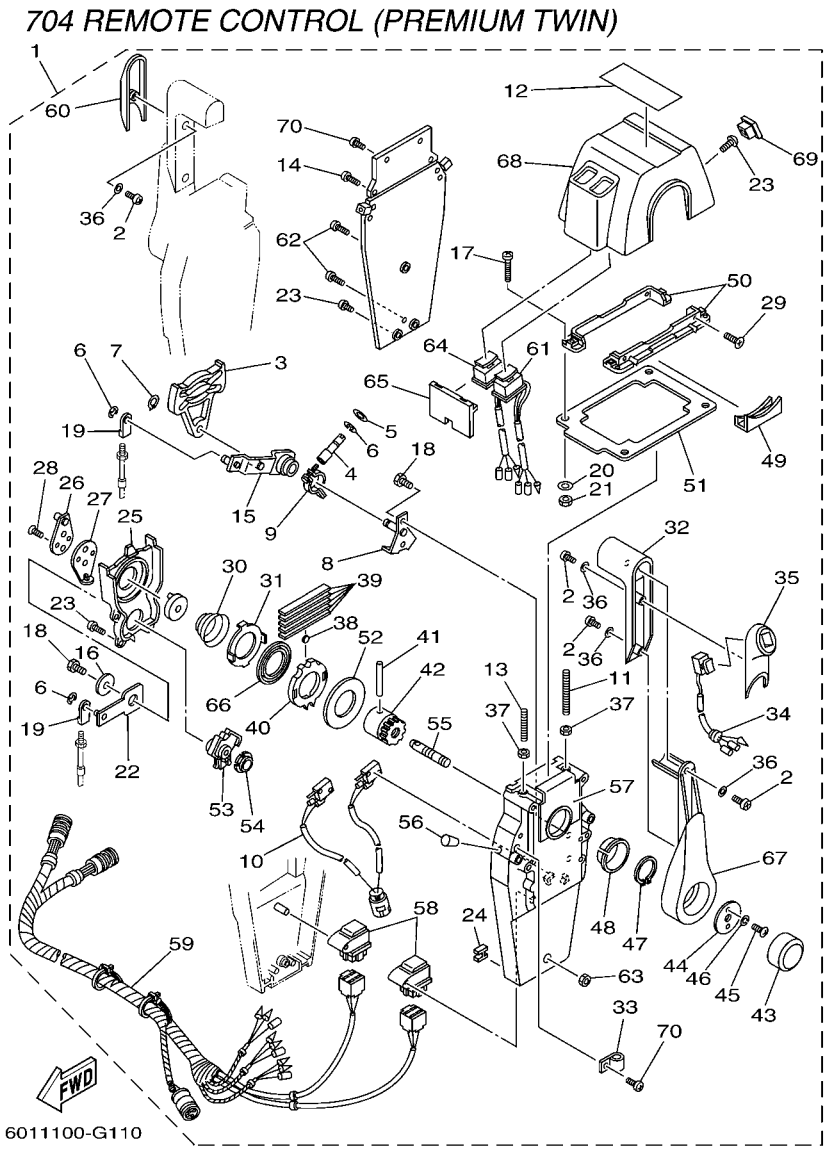

REF. NO.	PART NO. N° PIECES	DESCRIPTION DESCRIPTION	602R					REMARKS REMARQUES
55	704–48153–00	.SHAFT, FREE ACCEL. .AXE	2					
56	704–48166–00	.PLUG .BOUCHON	2					
57	704–48284–P0	.GROMMET .PASSE-FIL	2					
58	704–81950–10	.RELAY ASSY .RELAIS COMPLET	2					
59	704–82590–10	.WIRE HARNESS ASSY .FAISCEAU DE FILS COMPLET	1					
60	704–48229–R0	.GRIP, CONTROL LEVER .POIGNEE, COMMANDE LEVIER	1					
61	704–82563–H1	.TRIM & TILT SWITCH ASSY .INCLINER ET PARER COMMUTATEUR	1					
62	704–48128–00	.SCREW 2 .VIS 2	3					
63	704–48156–00	.NUT 1 .ECROU 1	1					
64	704–82563–J1	.TRIM & TILT SWITCH ASSY .INCLINER ET PARER COMMUTATEUR	1					
65	704–48285–10	.GROMMET 2 .PASSE-FIL 2	1					
66	704–48178–00	.PLATE, SHIFT .PLAQUETTE	2					
67	704–48221–P0	.LEVER, CONTROL .LEVIER, COMMANDE	2					
68	704–48119–41	.COVER .COQUILLE	1					
69	704–48167–11	.PLUG .BOUCHON	1					
70	97890–05016	.SCREW, PAN HEAD .VIS, CRUCIFORME	5					

6X3 REMOTE CONTROL

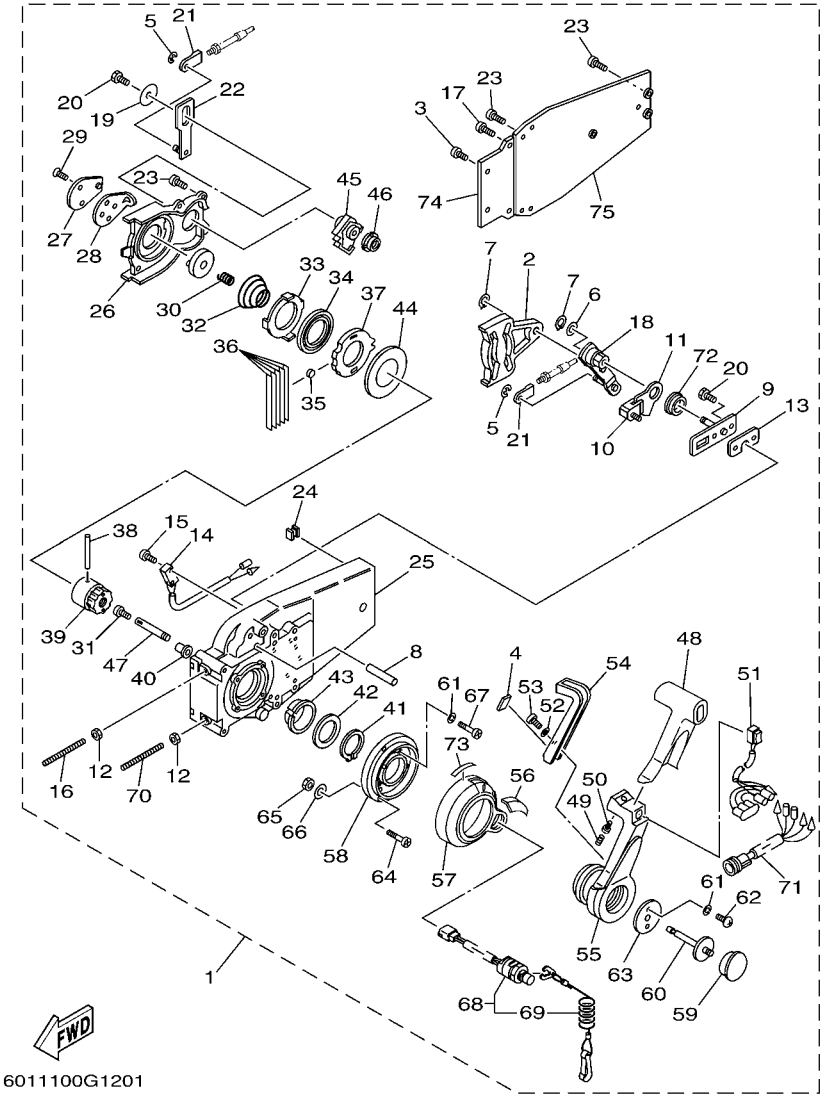

FIG. 12 REMOTE CONTROL ASSY 8 BOITIER DE COMMANDE A DISTANCE

REF. NO.	PART NO. N° PIECES	DESCRIPTION DESCRIPTION	602R					REMARKS REMARQUES
1	6X3–48206–01	REMOTE CONTROL ASSY MONO LEVIER GAUCHE AVEC TRIM	1					WITH PT/T SW. WITH PT/T SW.
2	EL8–48251–00	.PLATE, CAM .PLAQUE, CAME	1					
3	97890–05016	.SCREW, PAN HEAD .VIS, CRUCIFORME	2					
4	6X0–48138–00	.CAP, LOCK ARM .AMORTISSEUR	1					
5	93430–06024	.CIRCLIP .CLIPS	3					
6	92990–10600	.WASHER, PLATE .RONDELLE, PLATE	1					
7	EL8–48259–00	.CIRCLIP 1 .CIRCLIP	2					
8	6X0–48265–00	.SHAFT, FRICTION .AXE, COPILOTE	1					
9	6X0–48262–00	.SHAFT, THROTTLE .AXE, ACCELERATION	1					
10	6X0–48264–00	.THROTTLE, FRICTION .FRICTION, ACCELERATION	1					
11	6X0–48187–00	.PLATE, ADJUST .PLAQUE DE REGLAGE	1					
12	95380–06600	.NUT, HEXAGON .ECROU	2					
13	704–48266–00	.SPACER .ENTRETOISE	1					
14	704–82540–00	.NEUTRAL SWITCH ASSY .CONTACTEUR DE POINT-MORT	1					
15	98580–03015	.SCREW, PAN HEAD .VIS	2					
16	EL8–48281–00	.SCREW .VIS	1					
17	97890–05025	.SCREW, PAN HEAD .VIS, CRUCIFORME	2					
18	6X0–48261–00	.ARM, THROTTLE .BRAS, ACCELERATION	1					
19	EL8–48191–00	.WASHER 1 .RONDELLE	1					
20	97380–06018	.BOLT .BOULON, HEXAGONAL	3					
21	703–48345–01	.CABLE END, REMOTE CONTROL 2 .CHAPE CABLE	2					
22	EL8–48271–00	.ARM, SHIFT .BRAS	1					
23	EL8–48127–00	.SCREW 1 .VIS 1	11					
24	703–48358–00	.ANCHOR, CABLE .COLLIER	1					
25	6X0–48211–00	.HOUSING,1 .CORPS	1					
26	EL8–48231–00	.HOUSING, GEAR .CARTER, ENGRENAGE	1					
27	EL8–48241–00	.ARM, DRIVE .BRAS, COMMANDE	1					

6X3 REMOTE CONTROL

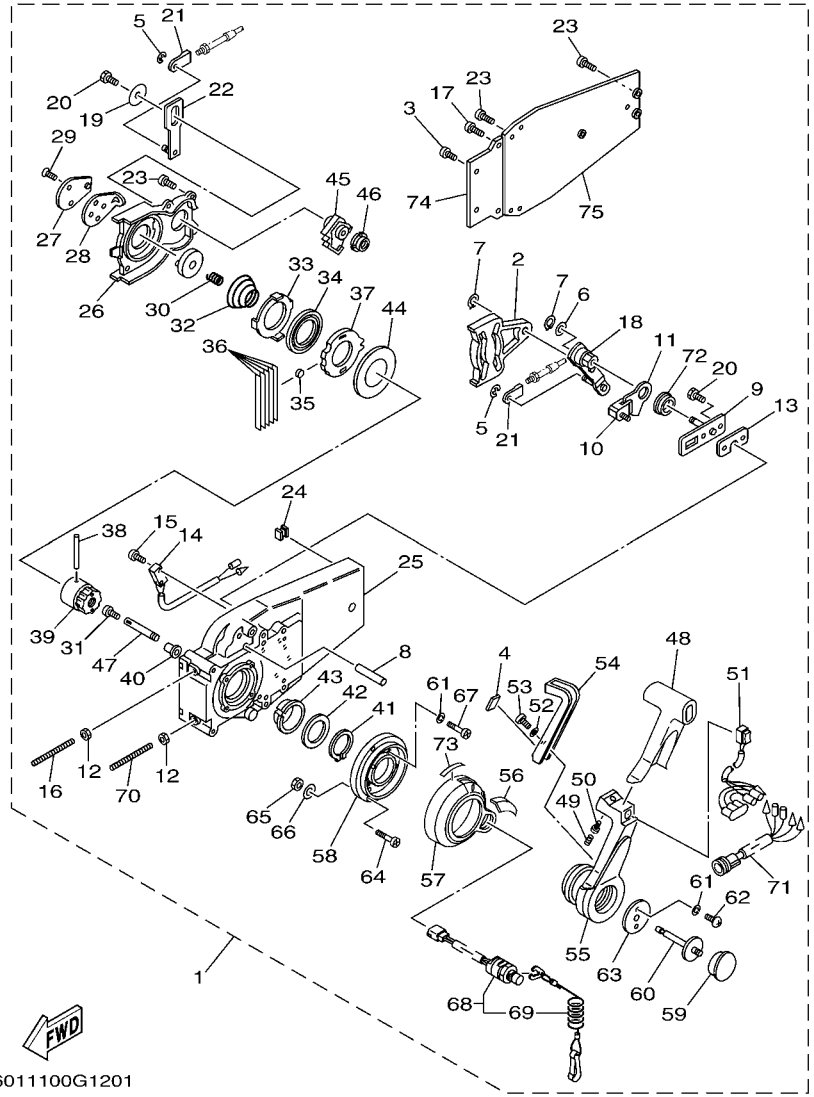

6011100G1201

FIG. 12 REMOTE CONTROL ASSY 8 BOITIER DE COMMANDE A DISTANCE

REF. NO.	PART NO. N° PIECES	DESCRIPTION DESCRIPTION	602R					REMARKS REMARQUES
28	EL8–48254–00	.STOPPER, THROTTLE ADJUSTING .BUTEE	1					
29	92780–06020	.SCREW, FLAT HEAD .VIS A TETE FRAISEE	2					
30	EL8–48158–00	.SPRING 1 .RESSORT 1	1					
31	98580–04006	.SCREW, PAN HEAD .VIS	1					
32	EL8–48244–00	.SPRING, FREE ACCEL. .RESSORT	1					
33	EL8–48245–00	.PLATE, LOCK .PLAQUE, VERROU	1					
34	704–48178–00	.PLATE, SHIFT .PLAQUETTE	1					
35	701–48248–00	.ROLLER, FREE ACCEL. .POULIE	1					
36	704–48238–00	.SPRING, DETENT .RESSORT	5					
37	6X0–48121–00	.GEAR 1 .PIGNON 1	1					
38	EL8–48164–00	.PIN 2 .PION 2	1					
39	EL8–48242–10	.SHAFT, DRIVE .ARBRE, MOTEUR	1					
40	702–48263–00	.BUSHING .COUSSINET	1					
41	EL8–48279–00	.CIRCLIP 2 .CIRCLIP 2	1					
42	704–48193–00	.WASHER 3 .RONDELLE 3	1					
43	EL8–48234–00	.BUSHING 1 .POULIE	1					
44	703–48192–00	.WASHER 2 .RONDELLE 2	1					
45	EL8–48233–00	.GEAR 2 .PIGNON 2	1					
46	702–48235–00	.BUSHING .COUSSINET	1					
47	6X0–48153–00	.SHAFT, FREE ACCEL. .AXE	1					
48	6X3–48222–01	.GRIP, CONTROL LEVER .POIGNEE, COMMANDE LEVIER	1					
49	703–48227–00	.SPRING, NEUTRAL LOCK .RESSORT	1					
50	98580–05008	.SCREW, PAN HEAD .VIS	1					
51	6X3–82563–01	.TRIM & TILT SWITCH ASSY .INCLINER ET PARER COMMUTATEUR	1					
52	6X0–48288–00	.WASHER, PLAIN .RONDELLE, PLATE	1					
53	6X0–48127–00	.SCREW 1 .VIS 1	1					
54	6X0–48223–00	.LOCK, NEUTRAL .VERROU, NEUTRAL	1					

6X3 REMOTE CONTROL

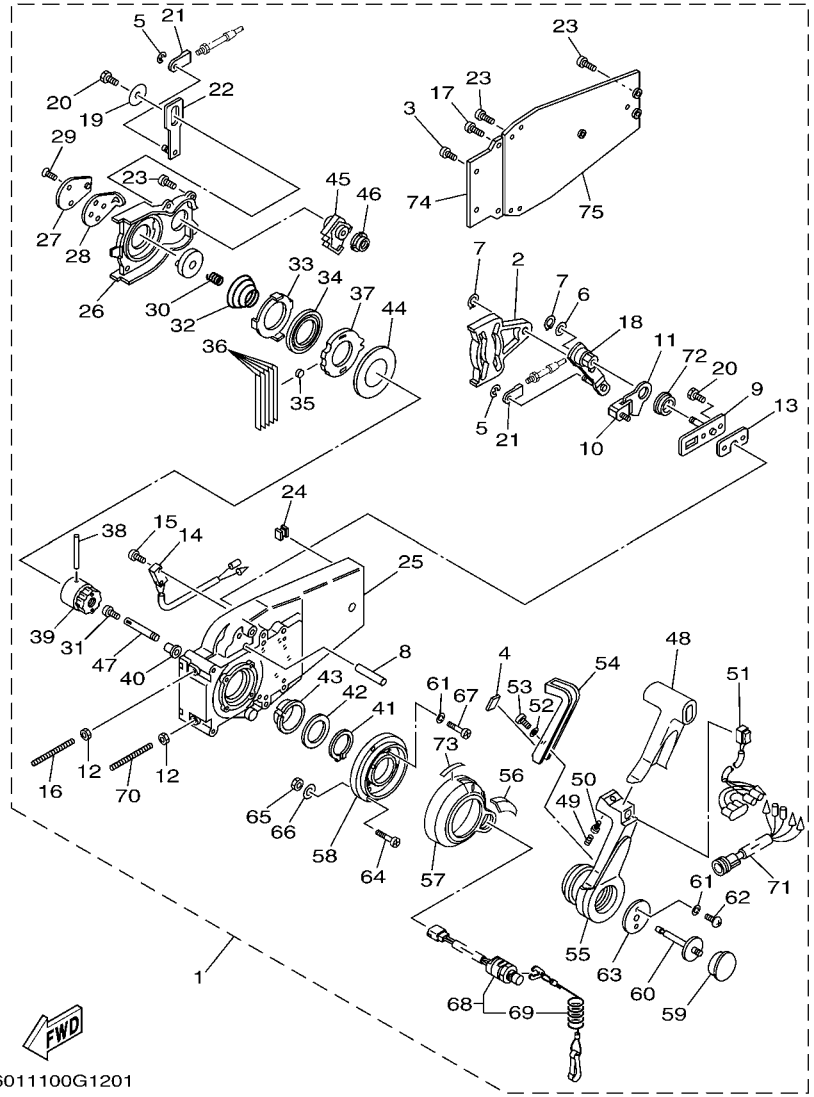

FIG. 12 REMOTE CONTROL ASSY 8 BOITIER DE COMMANDE A DISTANCE

REF. NO.	PART NO. N° PIECES	DESCRIPTION DESCRIPTION	602R					REMARKS REMARQUES
55	6X3–48221–00	.LEVER, CONTROL .LEVIER, COMMANDE	1					
56	6X3–48225–10	.COVER .COUVERCLE	1					
57	6X3–48225–00	.COVER .COUVERCLE	1					
58	6X3–48111–00	.BODY, REMOTE CONTROL 1 .CORPS, TELECOMMANDE 1	1					
59	6X3–48225–20	.COVER .COUVERCLE	1					
60	6X0–48155–00	.PLUNGER .POUSSOIR	1					
61	92990–05300	.WASHER, INTERNAL TOOTH .RONDELLE, DENTURE INTERNE	6					
62	6X0–48281–00	.SCREW .VIS	2					
63	6X0–48193–00	.WASHER 3 .RONDELLE 3	1					
64	97890–06035	.SCREW, PAN HEAD .VIS, CRUCIFORME	3					UR UR
	6X0–48128–00	.SCREW(M6X30) .VIS 2	3					UR UR
65	6X0–48156–00	.NUT 1 .ECROU 1	3					
66	701–48287–00	.WASHER .RONDELLE	3					
67	6X3–48129–00	.SCREW 3 .VIS 3	4					
68	6X3–82575–00	.ENGINE STOP SWITCH ASSY .COUPE CIRCUIT CPLT	1					
69	682–82556–00	..LANYARD, STOP SWITCH ..PLAQUETTE	1					
70	704–48281–00	.SCREW .VIS	1					
71	704–82541–10	.WIRE, LEAD .FIL	1					
72	6X0–48116–00	.BUSHING .COUSSINET	1					
73	6X3–44191–00	.INDICATOR, SHIFT .ETIQUETTE, EMBRAYAGE	1					
74	EL8–48212–00	.BACK PLATE 1 .PLAQUETTE 1	1					
75	EL8–48213–00	.BACK PLATE 2 .PLAQUETTE 2	1					

FIG. 13 REMOTE CONTROL ASSY 9 BOITIER DE COMMANDE A DISTANCE

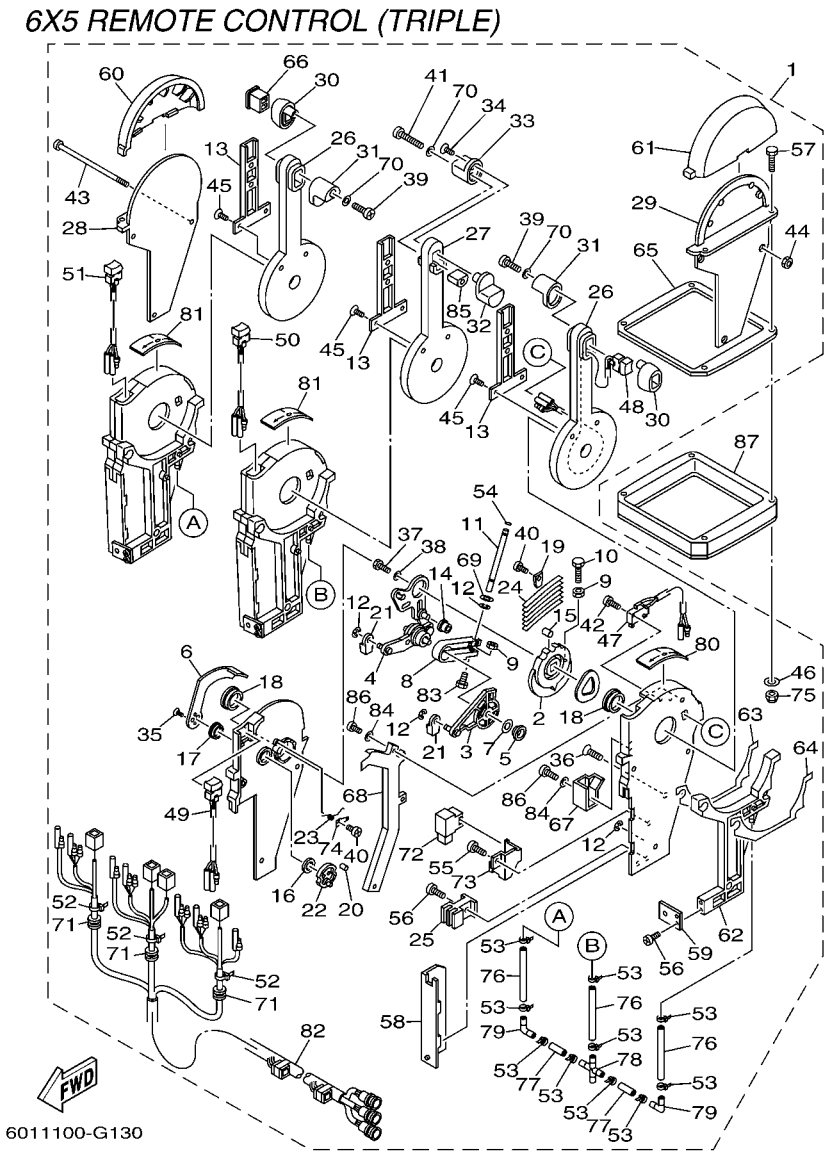

REF. NO.	PART NO. N° PIECES	DESCRIPTION DESCRIPTION	602R					REMARKS REMARQUES
1	6X5–48207–01	REMOTE CONTROL ASSY BOITIER DE COMMANDE A DISTANCE	1					WITH PT/T SW. WITH PT/T SW.
2	6X5–48232–00	.GEAR .PIGNON	3					
3	6X5–48271–00	.ARM, SHIFT .BRAS	3					
4	6X5–48261–00	.ARM, THROTTLE .BRAS, ACCELERATION	3					
5	703–48235–00	.BUSHING .COUSSINET	3					
6	6X5–48152–00	.KNOB, FREE ACCEL. .BOUTON	3					
7	703–48268–00	.SPACER .ENTRETOISE	3					
8	6X5–48264–00	.FRICTION, THROTTLE .FRICTION, ACCELERATION	3					
9	95380–05600	.NUT .ECROU	6					
10	97380–05025	.BOLT .BOULON, HEXAGONAL	3					
11	6X5–48265–00	.SHAFT, FRICTION .AXE, COPILOTE	3					
12	93430–06024	.CIRCLIP .CLIPS	12					
13	6X5–48224–00	.COVER, CONTROL LEVER .COUVERCLE	3					
14	703–48252–00	.ROLLER, CAM .POULIE	3					
15	701–48248–00	.ROLLER, FREE ACCEL. .POULIE	3					
16	703–48198–00	.WASHER, WAVE .RONDELLE, ELASTIQUE ONDULEE	3					
17	703–48243–00	.BUSHING .COUSSINET	3					
18	703–48236–00	.BUSHING 1 .POULIE	6					
19	703–48189–00	.RETAINER .FLASQUE	3					
20	703–48234–00	.ROLLER, DETENT .POULIE	3					
21	703–48345–01	.CABLE END, REMOTE CONTROL 2 .CHAPE CABLE	6					
22	703–48153–00	.SHAFT, FREE ACCEL. .AXE	3					
23	703–48244–00	.SPRING, FREE ACCEL. .RESSORT	3					
24	703–48238–00	.SPRING, DETENT .RESSORT	18					
25	6X5–48358–00	.ANCHOR, CABLE .COLLIER	3					
26	6X5–48221–00	.LEVER, CONTROL .LEVIER, COMMANDE	2					
27	6X5–48221–10	.LEVER, CONTROL .LEVIER, COMMANDE	1					

FIG. 13 REMOTE CONTROL ASSY 9 BOITIER DE COMMANDE A DISTANCE

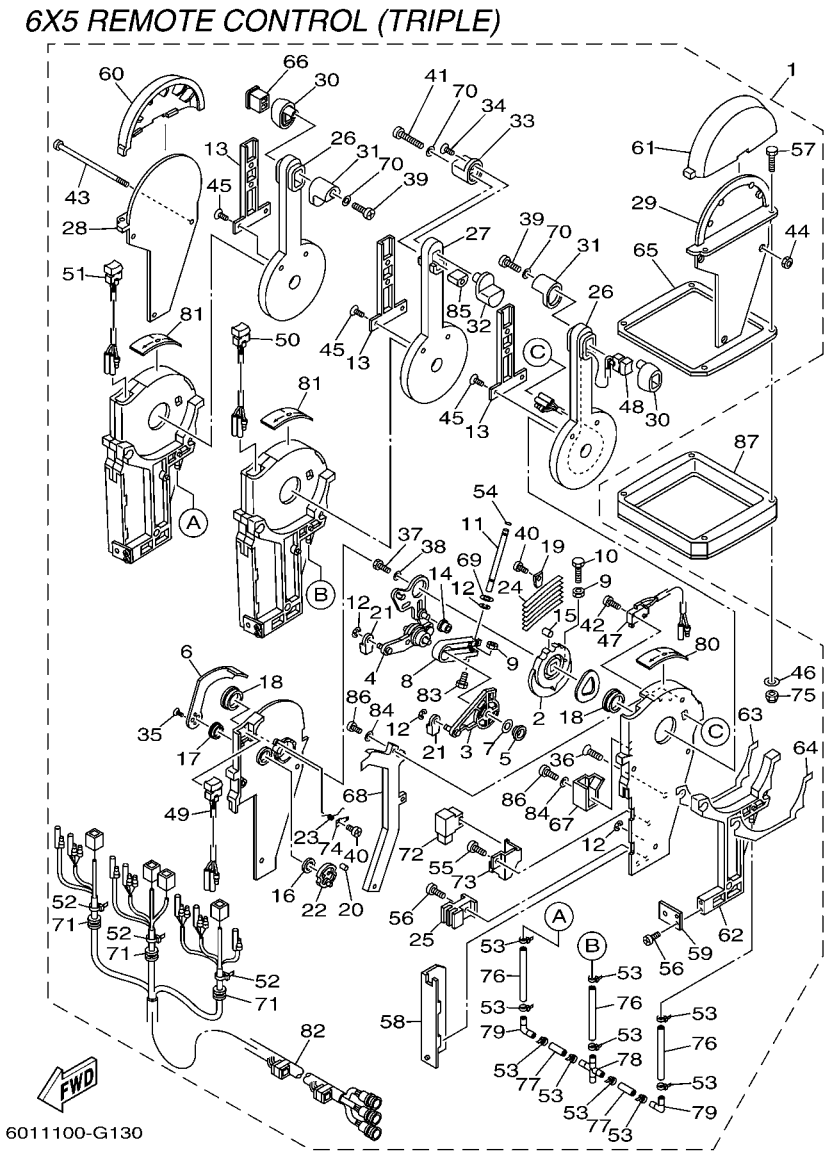

REF. NO.	PART NO. N° PIECES	DESCRIPTION DESCRIPTION	602R					REMARKS REMARQUES
28	6X5–48144–10	.PLATE, STOPPER 2 .PLAQUETTE 2	1					
29	6X5–48144–00	.PLATE, STOPPER 2 .PLAQUETTE 2	1					
30	6X5–48229–00	.GRIP, CONTROL LEVER .POIGNEE, COMMANDE LEVIER	2					
31	6X5–48222–00	.GRIP, CONTROL LEVER .POIGNEE, COMMANDE LEVIER	2					
32	6X5–48229–10	.GRIP, CONTROL LEVER .POIGNEE, COMMANDE LEVIER	1					
33	6X5–48222–10	.GRIP, CONTROL LEVER .POIGNEE, COMMANDE LEVIER	1					
34	6X5–48127–00	.SCREW 1 .VIS 1	1					
35	703–48128–00	.SCREW 2 .VIS 2	6					
36	6X5–48129–00	.SCREW 3 .VIS 3	9					
37	97380–08030	.BOLT .BOULON, HEXAGONAL	3					
38	92990–08200	.WASHER, PLAIN .RONDELLE, PLATE	3					
39	6X5–48127–10	.SCREW 1 .VIS 1	2					
40	98580–04006	.SCREW, PAN HEAD .VIS	6					
41	6X5–48127–20	.SCREW 1 .VIS 1	1					
42	98580–03015	.SCREW, PAN HEAD .VIS	6					
43	6X5–48267–00	.BOLT SET .BOULON ENS.	3					
44	95780–06300	.NUT, FLANGE .ECROU	3					
45	98780–04010	.SCREW, FLAT HEAD .VIS A TETE FRAISEE	6					
46	704–48287–00	.WASHER .RONDELLE	4					
47	6X5–82540–00	.NEUTRAL SWITCH ASSY .CONTACTEUR DE POINT-MORT	3					
48	6X5–82563–01	.TRIM & TILT SWITCH ASSY .INCLINER ET PARER COMMUTATEUR	1					
49	6X5–82563–11	.TRIM & TILT SWITCH ASSY .INCLINER ET PARER COMMUTATEUR	1					
50	6X5–82563–21	.TRIM & TILT SWITCH ASSY .INCLINER ET PARER COMMUTATEUR	1					
51	6X5–82563–31	.TRIM & TILT SWITCH ASSY .INCLINER ET PARER COMMUTATEUR	1					
52	703–82591–00	.BAND .COLLIER	3					
53	6X4–42821–00	.BAND, CLAMP .BRIDE, COLLIER	14					
54	6X5–48351–00	.SEAL, RUBBER .PASSE-FIL	3					

FIG. 13 REMOTE CONTROL ASSY 9 BOITIER DE COMMANDE A DISTANCE

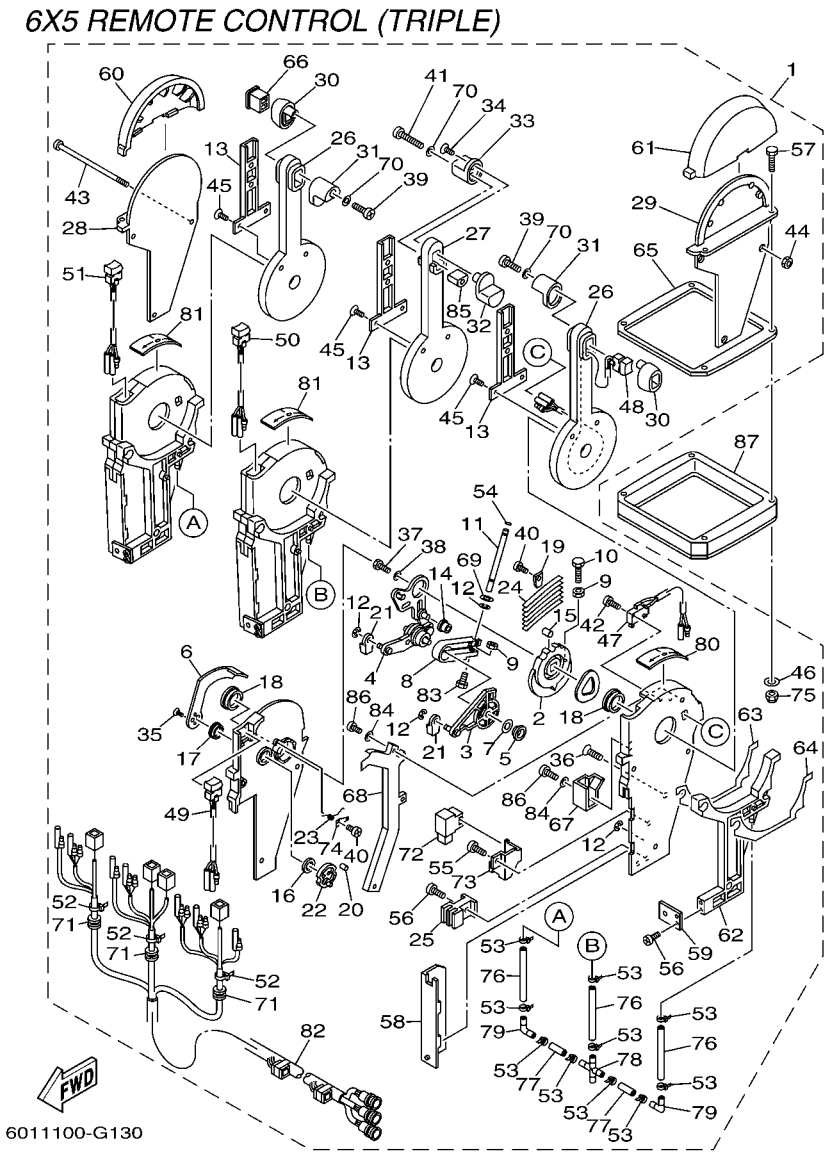

REF. NO.	PART NO. N° PIECES	DESCRIPTION DESCRIPTION	602R					REMARKS REMARQUES
55	98580–05010	.SCREW, PAN HEAD .VIS	3					
56	98580–05012	.SCREW, PAN HEAD .VIS	12					
57	98580–05040	.SCREW, PAN HEAD .VIS	4					UR UR
	97780–05130	.SCREW, TAPPING .VIS, TETE BOMBEE	4					UR UR
58	6X5–48213–00	.BACK PLATE 2 .PLAQUETTE 2	3					
59	6X5–48354–00	.SET-PLATE, CABLE .METTEZ LE CABLE DE LA PLAQUE	3					
60	6X5–48119–10	.COVER .COQUILLE	1					
61	6X5–48119–00	.COVER .COQUILLE	1					
62	6X5–48246–00	.SPACER .ENTRETOISE	3					
63	6X5–48214–00	.PAD .APPUI GAUCHE	3					
64	6X5–48214–10	.PAD .APPUI GAUCHE	3					
65	6X5–48176–00	.GROMMET .PASSE-FIL	1					
66	6X5–48222–20	.GRIP, CONTROL LEVER .POIGNEE, COMMANDE LEVIER	1					
67	6X5–48219–00	.COVER, LEAD .COUVERCLE	3					
68	6X5–48225–00	.COVER .COUVERCLE	3					
69	92990–08600	.WASHER, PLATE .RONDELLE, PLATE	3					
70	92990–05300	.WASHER, INTERNAL TOOTH .RONDELLE, DENTURE INTERNE	3					
71	6X5–48175–00	.BOOT .SOUFFLET	3					
72	704–81950–10	.RELAY ASSY .RELAIS COMPLET	4					
73	6X5–48228–00	.HOLDER, SWITCH .SUPPORT	3					
74	703–48246–00	.SPACER .ENTRETOISE	3					
75	95380–06600	.NUT, HEXAGON .ECROU	4					
76	6X5–48317–00	.TUBE .DURITE	3					
77	6X5–48317–10	.TUBE .DURITE	2					
78	6X5–48338–00	.CONNECTOR .CONNECTEUR	1					
79	6X5–48338–10	.CONNECTOR .CONNECTEUR	2					
80	6X5–48215–00	.GRAPHIC .ADHESIF	1					

FIG. 13 REMOTE CONTROL ASSY 9 BOITIER DE COMMANDE A DISTANCE

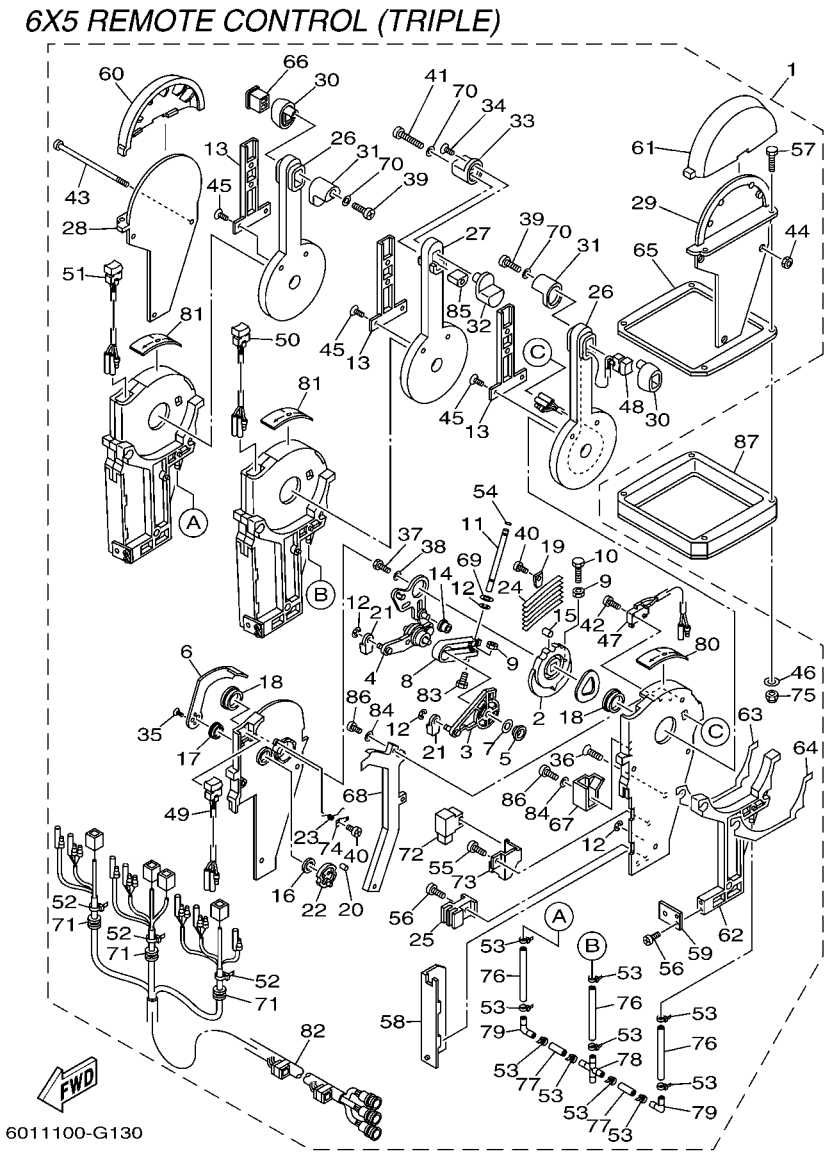

REF. NO.	PART NO. N° PIECES	DESCRIPTION DESCRIPTION	602R					REMARKS REMARQUES
81	6X5–48215–10	.GRAPHIC .ADHESIF	2					
82	6X5–82590–00	.WIRE HARNESS ASSY .FAISCEAU DE FILS COMPLET	1					
83	6X5–48267–00	.BOLT SET .BOULON ENS.	3					
84	92990–05200	.WASHER, PLAIN .RONDELLE, PLATE	15					
85	6X5–48222–30	.GRIP, CONTROL LEVER .POIGNEE, COMMANDE LEVIER	1					
86	98580–05012	.SCREW, PAN HEAD .VIS	15					
87	6X5–48293–00	SPACER, REMOTE CONTROL ENTRETOISE	1					LM LM

FIG. 14 REMOTE CONTROL CABLES CABLE COMMANDE A DISTANCE

REMOTE CONTROL CABLE

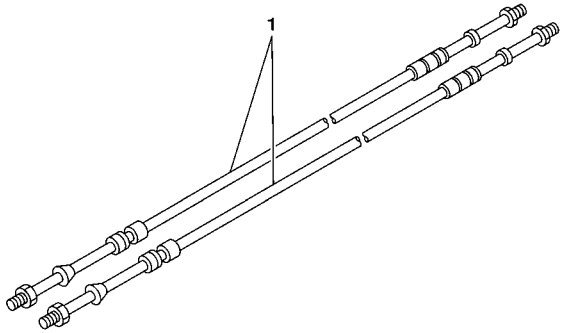

6011100-G140

REF. NO.	PART NO. N° PIECES	DESCRIPTION DESCRIPTION	602R					REMARKS REMARQUES
1	701–48310–10	CABLE, REMOTE CONTROL L=6F CABLE, COMMANDE A DISTANCE :6F	2					UR UR
	701–48310–20	CABLE, REMOTE CONTROL L=7F CABLE, COMMANDE A DISTANCE :7F	2					UR UR
	701–48310–40	CABLE, REMOTE CONTROL L=8F CABLE, COMMANDE A DISTANCE :8F	2					UR UR
	701–48310–60	CABLE, REMOTE CONTROL L=9F CABLE, COMMANDE A DISTANCE :9F	2					UR UR
	701–48310–80	CABLE, REMOTE CONTROL L=10F CABLE, COMMANDE A DISTANCE:10F	2					UR UR
	701–48310–90	CABLE, REMOTE CONTROL L=11F CABLE, COMMANDE A DISTANCE:11F	2					UR UR
	701–48320–00	CABLE, REMOTE CONTROL L=12F CABLE, COMMANDE A DISTANCE:12F	2					UR UR
	701–48320–20	CABLE, REMOTE CONTROL L=13F CABLE, COMMANDE A DISTANCE:13F	2					UR UR
	701–48320–30	CABLE, REMOTE CONTROL L=14F CABLE, COMMANDE A DISTANCE:14F	2					UR UR
	701–48320–50	CABLE, REMOTE CONTROL L=15F CABLE, COMMANDE A DISTANCE:15F	2					UR UR
	701–48320–60	CABLE, REMOTE CONTROL L=16F CABLE, COMMANDE A DISTANCE:16F	2					UR UR
	701–48320–80	CABLE, REMOTE CONTROL L=17F CABLE, COMMANDE A DISTANCE:17F	2					UR UR
	701–48320–90	CABLE, REMOTE CONTROL L=18F CABLE, COMMANDE A DISTANCE:18F	2					UR UR
	701–48320–40	CABLE, REMOTE CONTROL L=19F CABLE, COMMANDE A DISTANCE:19F	2					UR UR
	701–48320–70	CABLE, REMOTE CONTROL L=20F CABLE, COMMANDE A DISTANCE:20F	2					UR UR
	701–48350–00	CABLE, REMOTE CONTROL L=21F CABLE, COMMANDE A DISTANCE:21F	2					UR UR
	701–48350–10	CABLE, REMOTE CONTROL L=22F CABLE, COMMANDE A DISTANCE:22F	2					UR UR
	701–48350–20	CABLE, REMOTE CONTROL L=23F CABLE, COMMANDE A DISTANCE:23F	2					UR UR
	701–48350–30	CABLE, REMOTE CONTROL L=24F CABLE, COMMANDE A DISTANCE	2					UR UR
	701–48350–40	CABLE, REMOTE CONTROL L=25F CABLE, COMMANDE A DISTANCE	2					UR UR
	701–48350–50	CABLE, REMOTE CONTROL L=26F CABLE, COMMANDE A DISTANCE	2					UR UR
	701–48350–60	CABLE, REMOTE CONTROL L=27F CABLE, COMMANDE A DISTANCE:27F	2					UR UR

REMOTE CONTROL SPECIFICATION LIST (6X6 TYPE)

TYPE : 6X6	MECHANICAL SPECIFICATION								
TYPE : 6X6	LIST UP SEC.	TYPE CODE	SERIAL NO.	ENGINE			SINGLE STATION	DUAL STATION	
PART NO.	FIG.NO.-REF.NO.			SINGLE	TWIN	TRIPLE		MAIN	SUB
6X6-48205-00	15-1	A	6X6:0000001-	○	*	*	○	*	*
6X6-48205-10		C	6X6:1000001-	○	*	*	*	○	*
6X6-48205-20		G	6X6:3000001-	○	*	*	*	*	○
6X6-48207-00	16-1	B	6X6:0500001-	*	○	*	○	*	*
6X6-48207-10		D	6X6:1500001-	*	○	*	*	○	*
6X6-48207-20		H	6X6:3500001-	*	○	*	*	*	○
6X6-48208-20	17-1	F	6X6:2500001-	*	*	○	*	○	
6X6-48208-30		K	6X6:5000001-	*	*	○	*	*	○

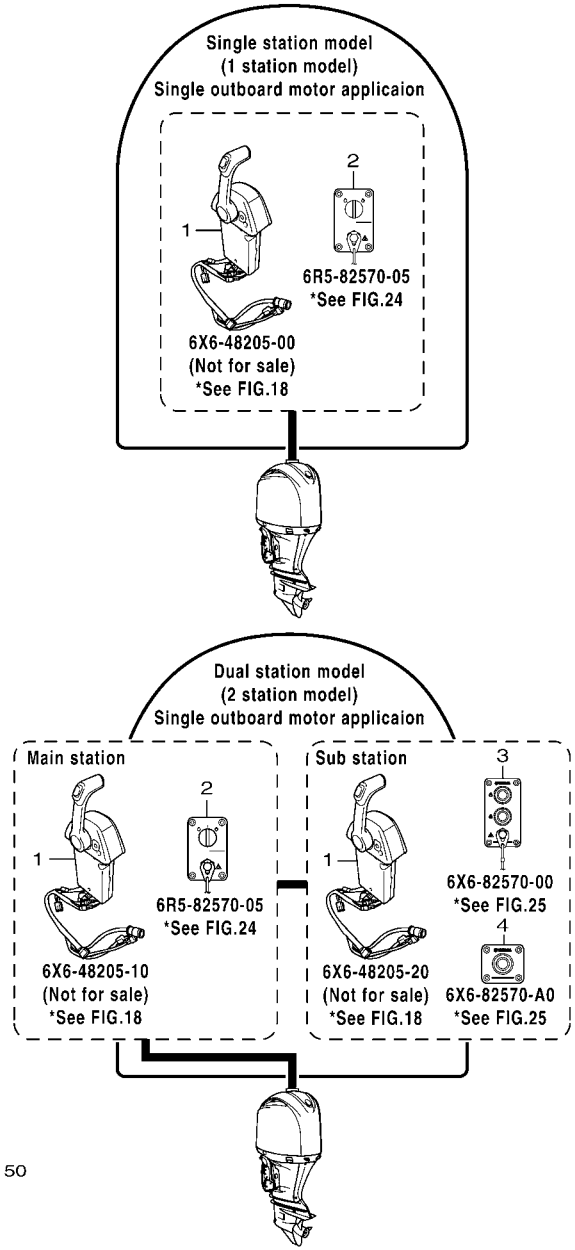

601R10R-H150

FIG. 15 LAYOUT CHART 1 (SINGLE) DIAGRAMME 1 (SIMPLE)

REF. NO.	PART NO. N° PIECES	DESCRIPTION DESCRIPTION	602R					REMARKS REMARQUES
1	6X6–48205–00	REMOTE CONTROL ASSY (SINGLE) BOITIER DE COMMANDE A DISTANCE	1					NOT FOR SALE NOT FOR SALE
	6X6–48205–10	REMOTE CONTROL ASSY BOITIER DE COMMANDE A DISTANCE	1					NOT FOR SALE NOT FOR SALE
	6X6–48205–20	REMOTE CONTROL ASSY BOITIER DE COMMANDE A DISTANCE	1					NOT FOR SALE NOT FOR SALE
2	6R5–82570–05	PANEL SWITCH ASSY PLATINE D'INTERRUPEUR CPLT	1					1 & 2 STATION MAIN 1 & 2 STATION MAIN
3	6X6–82570–00	PANEL SWITCH ASSY (SINGLE) PLATINE D'INTERRUPEUR CPLT	1					2 STATION SUB 2 STATION SUB
4	6X6–82570–A0	PANEL SWITCH ASSY PLATINE D'INTERRUPEUR CPLT	2					2 STATION SUB 2 STATION SUB

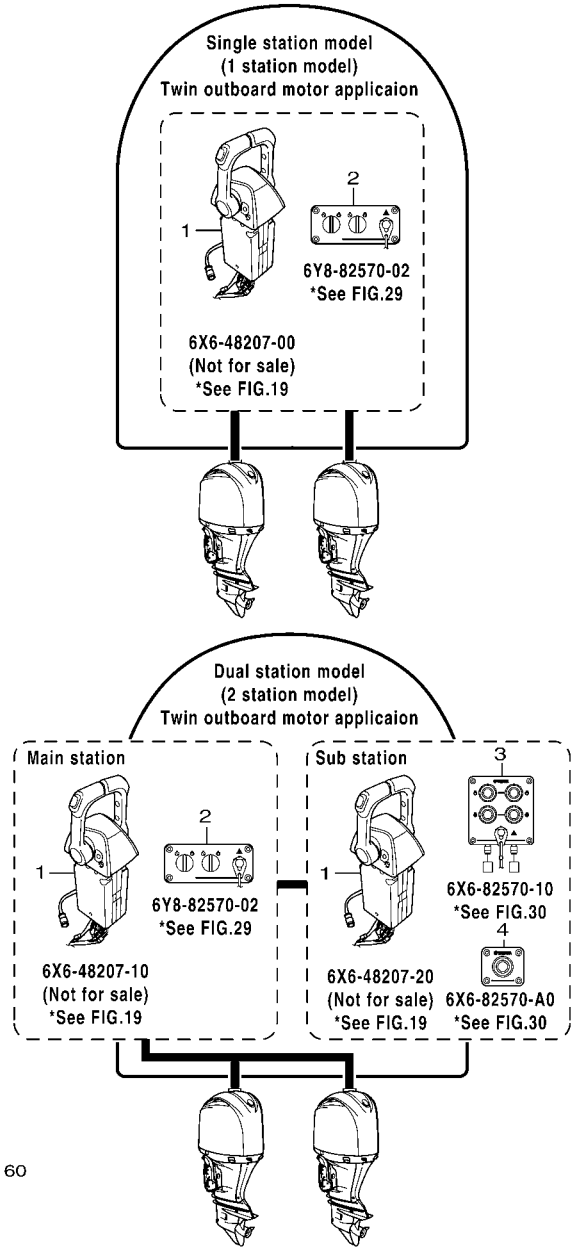

601R10R-H160

FIG. 16 LAYOUT CHART 2 (TWIN) DIAGRAMME 2 (DOUBLE)

REF. NO.	PART NO. N° PIECES	DESCRIPTION DESCRIPTION	602R					REMARKS REMARQUES
1	6X6–48207–00	REMOTE CONTROL ASSY (TWIN) BOITIER DE COMMANDE A DISTANCE	1					NOT FOR SALE NOT FOR SALE
	6X6–48207–10	REMOTE CONTROL ASSY BOITIER DE COMMANDE A DISTANCE	1					NOT FOR SALE NOT FOR SALE
	6X6–48207–20	REMOTE CONTROL ASSY BOITIER DE COMMANDE A DISTANCE	1					NOT FOR SALE NOT FOR SALE
2	6Y8–82570–02	PANEL SW., TWIN PLATINE D'INTERRUPEUR CPLT	1					1 & 2 STATION MAIN 1 & 2 STATION MAIN
3	6X6–82570–10	PANEL SWITCH ASSY (TWIN) PLATINE D'INTERRUPEUR CPLT	1					2 STATION SUB 2 STATION SUB
4	6X6–82570–A0	PANEL SWITCH ASSY PLATINE D'INTERRUPEUR CPLT	2					2 STATION SUB 2 STATION SUB

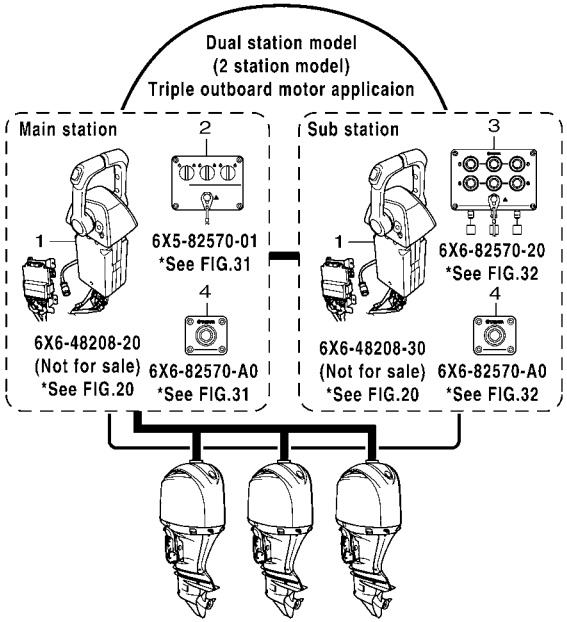

601R10R-H170

FIG. 17 LAYOUT CHART 3 (TRIPLE) DIAGRAMME 3 (TROIS)

REF. NO.	PART NO. N° PIECES	DESCRIPTION DESCRIPTION	602R					REMARKS REMARQUES
1	6X6–48208–20	REMOTE CONTROL ASSY BOITIER DE COMMANDE A DISTANCE	1					NOT FOR SALE NOT FOR SALE
	6X6–48208–30	REMOTE CONTROL ASSY BOITIER DE COMMANDE A DISTANCE	1					NOT FOR SALE NOT FOR SALE
2	6X5–82570–01	PANEL SWITCH ASSY PLATINE D'INTERRUPEUR CPLT	1					2 STATION MAIN 2 STATION MAIN
3	6X6–82570–20	PANEL SWITCH ASSY PLATINE D'INTERRUPEUR CPLT	1					2 STATION SUB 2 STATION SUB
4	6X6–82570–A0	PANEL SWITCH ASSY PLATINE D'INTERRUPEUR CPLT	2					

6X6 REMOTE CONTROL (SINGLE)

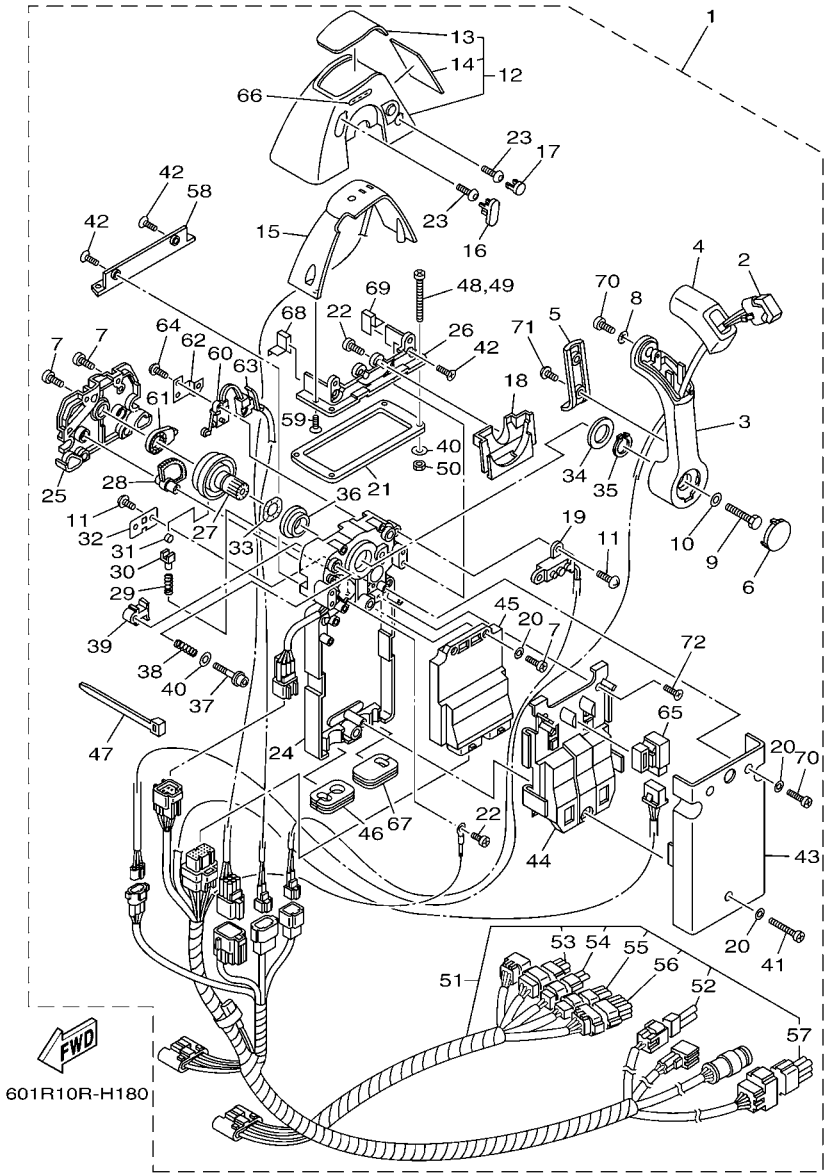

FIG. 18 DBW REMOTE CONTROL 1 (SINGLE) BOITIER COMMANDE 1 (SIMPLE)

REF. NO.	PART NO. N° PIECES	DESCRIPTION DESCRIPTION	602R					REMARKS REMARQUES
1	6X6–48205–00	REMOTE CONTROL ASSY (SINGLE) BOITIER DE COMMANDE A DISTANCE	1					NOT FOR SALE NOT FOR SALE
	6X6–48205–10	REMOTE CONTROL ASSY BOITIER DE COMMANDE A DISTANCE	1					NOT FOR SALE NOT FOR SALE
	6X6–48205–20	REMOTE CONTROL ASSY BOITIER DE COMMANDE A DISTANCE	1					NOT FOR SALE NOT FOR SALE
2	6X6–82563–00	.TRIM & TILT SWITCH ASSY .INCLINER ET PARER COMMUTATEUR	1					
3	6X6–48221–00	.LEVER, CONTROL .LEVIER, COMMANDE	1					
4	6X6–48222–00	.GRIP, CONTROL LEVER .POIGNEE, COMMANDE LEVIER	1					
5	6X6–48224–00	.COVER, CONTROL LEVER .COUVERCLE	1					
6	6X6–48224–10	.COVER, CONTROL LEVER .COUVERCLE	1					
7	98580–05014	.SCREW, PAN HEAD .VIS	6					
8	92990–05300	.WASHER, INTERNAL TOOTH .RONDELLE, DENTURE INTERNE	1					
9	6X6–48171–00	.BOLT .BOULON	1					
10	92990–08600	.WASHER, PLATE .RONDELLE, PLATE	1					
11	EL8–48127–00	.SCREW 1 .VIS 1	4					
12	6X6–48119–03	.COVER .COQUILLE	1					
13	6X6–48215–00	..GRAPHIC ..ADHESIF	1					
14	6X6–48216–00	..GRAPHIC ..ADHESIF 2 GAUCHE	1					
15	6X6–84301–00	.PILOT LIGHT ASSY 1 .LAMPE-TEMOIN 1	1					
16	6X6–48167–00	.PLUG .BOUCHON	1					
17	6X6–48167–50	.PLUG .BOUCHON	1					
18	6X6–48219–00	.COVER, LEAD .COUVERCLE	1					
19	6X6–8259E–00	.SWITCH ASSY .COMMUTATEUR COMPLET	1					
20	92990–05200	.WASHER, PLAIN .RONDELLE, PLATE	5					
21	6X6–48176–00	.GROMMET .PASSE-FIL	1					
22	98580–04010	.SCREW, PAN HEAD .VIS	3					
23	92D80–05016	.BOLT, SOCKET HEAD .BOULON	2					
24	6X6–481A0–01	.REMO-CON. CASE ASSY .BOITIER ENS.	1					
25	6X6–48212–00	.BACK PLATE 1 .PLAQUETTE 1	1					

6X6 REMOTE CONTROL (SINGLE)

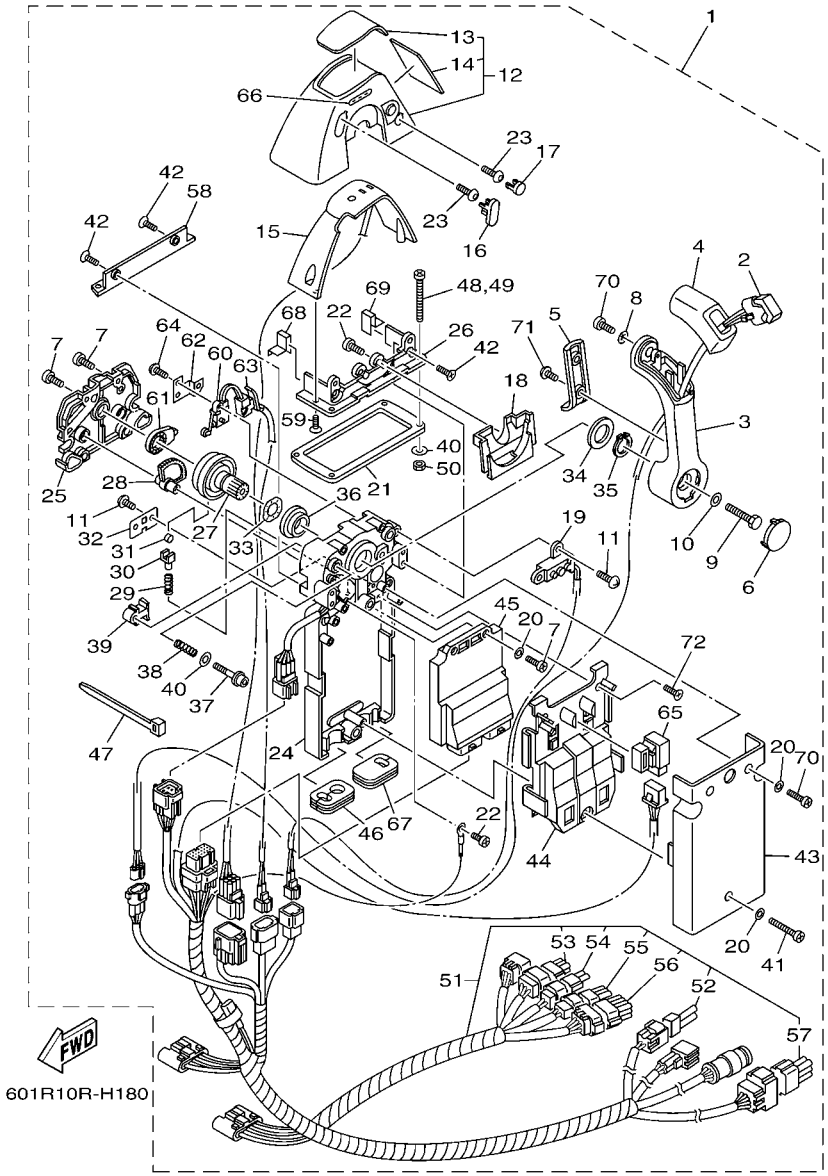

FIG. 18 DBW REMOTE CONTROL 1 (SINGLE) BOITIER COMMANDE 1 (SIMPLE)

REF. NO.	PART NO. N° PIECES	DESCRIPTION DESCRIPTION	602R					REMARKS REMARQUES
26	6X6–48144–10	.PLATE, STOPPER 2 .PLAQUETTE 2	1					
27	6X6–48242–01	.SHAFT, DRIVE .ARBRE, MOTEUR	1					
28	6X6–48233–01	.GEAR 2 .PIGNON 2	1					
29	6X6–48238–00	.SPRING, DETENT .RESSORT	1					
30	6X6–48237–00	.ADAPTOR .ADAPTEUR	1					
31	6X6–48236–00	.ROLLER, DETENT .POULIE	1					
32	6X6–48189–00	.RETAINER .FLASQUE	1					
33	703–48198–00	.WASHER, WAVE .RONDELLE, ELASTIQUE ONDULEE	1					
34	6X6–48193–00	.WASHER 3 .RONDELLE 3	1					
35	6X6–48118–00	.CLIP, SHIFT LEVER .ATTACHE, LEVIER DE CHANGER	1					
36	6X6–48234–00	.BUSHING 1 .POULIE	1					
37	6X6–48267–00	.BOLT SET .BOULON ENS.	1					
38	6X6–48158–00	.SPRING 1 .RESSORT 1	1					
39	6X6–48264–00	.FRICTION, THROTTLE .FRICTION, ACCELERATION	1					
40	704–48287–00	.WASHER .RONDELLE	5					
41	6X6–81145–00	.SCREW 1 .VIS 1	1					
42	98780–05014	.SCREW, FLAT HEAD .VIS A TETE FRAISEE	4					
43	6X6–48213–00	.BACK PLATE 2 .PLAQUETTE 2	1					
44	6X6–48228–00	.HOLDER, SWITCH .SUPPORT	1					
45	6X6–85590–10	.CONTROL UNIT ASSY .BLOC DE CONTROLE	1					1 STATION 1 STATION
	6X6–85590–00	.CONTROL UNIT ASSY .BLOC DE CONTROLE	1					2 STATION 2 STATION
46	6X6–48175–00	.BOOT .SOUFFLET	1					1 STATION 1 STATION
	6X6–48175–00	.BOOT .SOUFFLET	2					2 STATION 2 STATION
47	703–82591–00	.BAND .COLLIER	3					1 STATION 1 STATION
	703–82591–00	.BAND .COLLIER	4					2 STATION 2 STATION
48	97780–50145	.SCREW, TAPPING .VIS, TETE BOMBEE	4					
49	98580–05060	.SCREW, PAN HEAD .VIS	4					

6X6 REMOTE CONTROL (SINGLE)

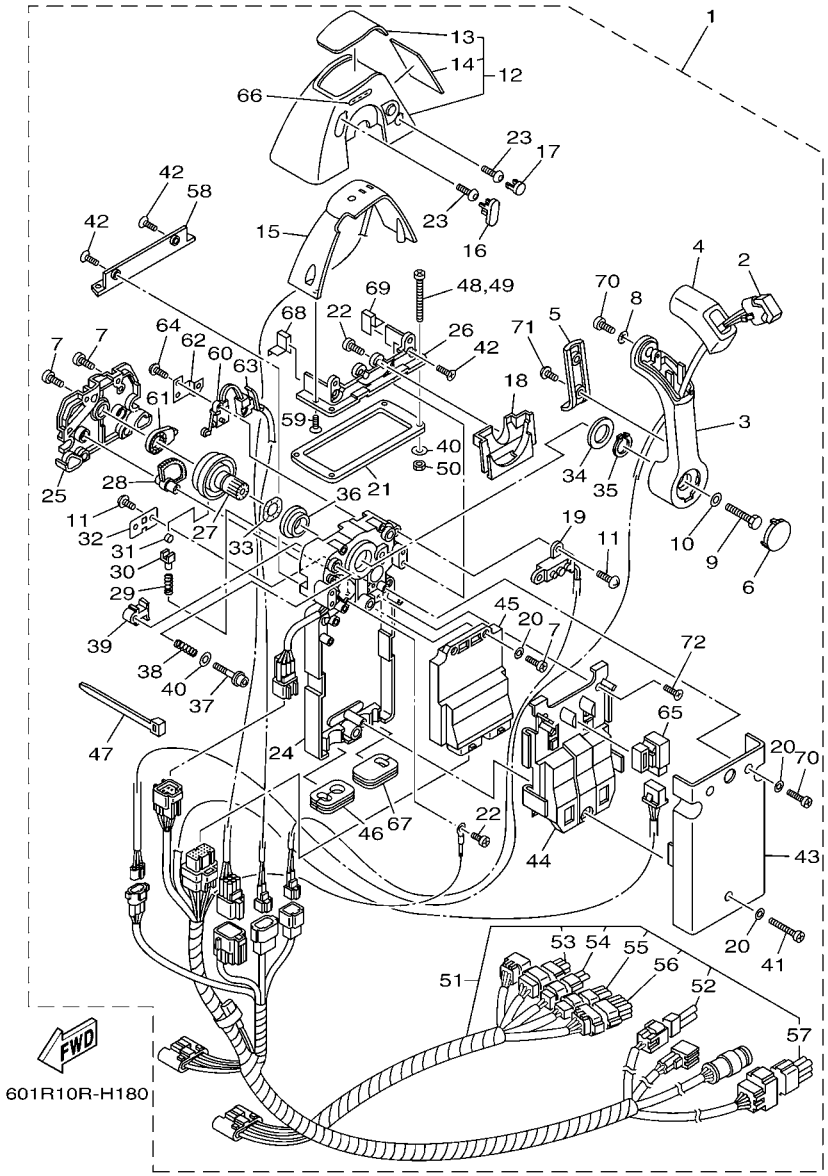

FIG. 18 DBW REMOTE CONTROL 1 (SINGLE) BOITIER COMMANDE 1 (SIMPLE)

REF. NO.	PART NO. N° PIECES	DESCRIPTION DESCRIPTION	602R					REMARKS REMARQUES
50	95380–05600	.NUT .ECROU	4					
51	6X6–82590–00	.WIRE HARNESS ASSY .FAISCEAU DE FILS COMPLET	1					1 STATION 1 STATION
	6X6–82590–20	.WIRE HARNESS ASSY .FAISCEAU DE FILS COMPLET	1					2 STATION MAIN 2 STATION MAIN
	6X6–82590–50	.WIRE HARNESS ASSY .FAISCEAU DE FILS COMPLET	1					2 STATION SUB 2 STATION SUB
52	6X6–82585–20	..CAP 2 (2P) ..COUVERCLE 2 (2P)	1					
53	6X6–82582–60	..CAP 1 (6P) ..BOUCHON 1 (6P)	1					FOR 6X6-82590-20 FOR 6X6-82590-20
54	6X6–82582–40	..CAP 1 (4P) ..BOUCHON 1 (4P)	1					FOR 6X6-82590-20 FOR 6X6-82590-20
55	6X6–82582–30	..CAP 1 (3P) ..BOUCHON 1 (3P)	1					FOR 6X6-82590-20 FOR 6X6-82590-20
56	6X6–82582–B0	..CAP 1 (12P) ..BOUCHON 1 (12P)	1					FOR 6X6-82590-20 FOR 6X6-82590-20
57	6X6–8257Y–60	..CAP (6P) ..COUVERCLE (6P)	1					FOR 6X6-82590-20 FOR 6X6-82590-20
58	6X6–48144–00	.PLATE, STOPPER 2 .PLAQUETTE 2	1					
59	6X6–48129–00	.SCREW 3 .VIS 3	2					
60	6X6–82540–00	.NEUTRAL SWITCH ASSY .CONTACTEUR DE POINT-MORT	1					
61	6X6–48241–00	.ARM, DRIVE .BRAS, COMMANDE	1					
62	6X6–48245–01	.PLATE, LOCK .PLAQUE, VERROU	1					
63	6X6–82545–00	.GROMMET .PASSE-FIL	1					
64	6X6–8252V–00	.SCREW, SPECIAL .VIS, SPECIALE	2					
65	704–81950–10	.RELAY ASSY .RELAIS COMPLET	1					
66	6X6–44191–00	.INDICATOR, SHIFT .ETIQUETTE, EMBRAYAGE	1					
67	6X6–48175–10	.BOOT .SOUFFLET	1					1 STATION ONLY 1 STATION ONLY
68	6X6–48176–50	.GROMMET .PASSE-FIL	1					
69	6X6–48176–60	.GROMMET .PASSE-FIL	1					
70	6X6–48127–00	.SCREW 1 .VIS 1	3					
71	6X6–48128–00	.SCREW 2 .VIS 2	2					
72	6X6–81146–00	.SCREW 2 .VIS 2	2					

6X6 REMOTE CONTROL (TWIN)

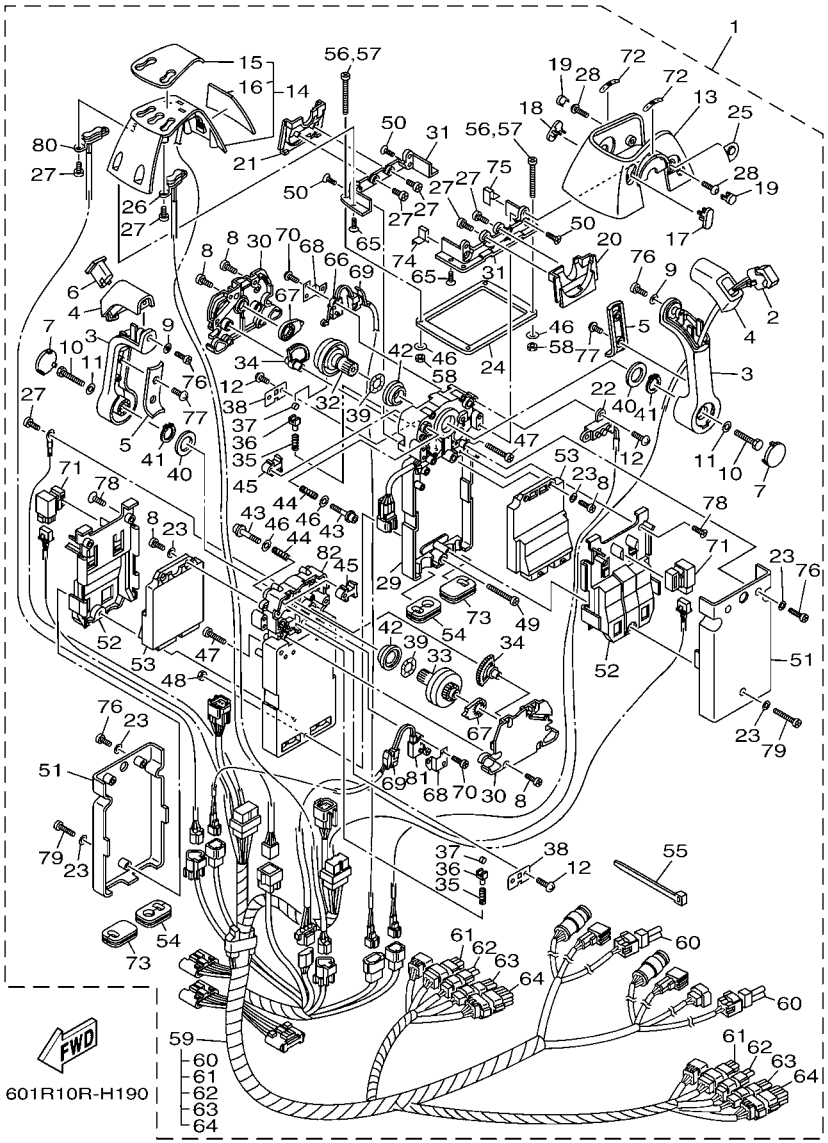

FIG. 19 DBW REMOTE CONTROL 2 (TWIN) BOITIER COMMANDE 2 (DOUBLE)

REF. NO.	PART NO. N° PIECES	DESCRIPTION DESCRIPTION	602R					REMARKS REMARQUES
1	6X6–48207–00	REMOTE CONTROL ASSY (TWIN) BOITIER DE COMMANDE A DISTANCE	1					NOT FOR SALE NOT FOR SALE
	6X6–48207–10	REMOTE CONTROL ASSY BOITIER DE COMMANDE A DISTANCE	1					NOT FOR SALE NOT FOR SALE
	6X6–48207–20	REMOTE CONTROL ASSY BOITIER DE COMMANDE A DISTANCE	1					NOT FOR SALE NOT FOR SALE
2	6X6–82563–00	.TRIM & TILT SWITCH ASSY .INCLINER ET PARER COMMUTATEUR	1					
3	6X6–48221–00	.LEVER, CONTROL .LEVIER, COMMANDE	2					
4	6X6–48222–00	.GRIP, CONTROL LEVER .POIGNEE, COMMANDE LEVIER	2					
5	6X6–48224–00	.COVER, CONTROL LEVER .COUVERCLE	2					
6	6X6–48222–10	.GRIP, CONTROL LEVER .POIGNEE, COMMANDE LEVIER	1					
7	6X6–48224–10	.COVER, CONTROL LEVER .COUVERCLE	2					
8	98580–05014	.SCREW, PAN HEAD .VIS	12					
9	92990–05300	.WASHER, INTERNAL TOOTH .RONDELLE, DENTURE INTERNE	2					
10	6X6–48171–00	.BOLT .BOULON	2					
11	92990–08600	.WASHER, PLATE .RONDELLE, PLATE	2					
12	EL8–48127–00	.SCREW 1 .VIS 1	6					
13	6X6–48119–10	.COVER .COQUILLE	1					
14	6X6–84301–12	.PILOT LIGHT ASSY 1 .LAMPE-TEMOIN 1	1					
15	6X6–48215–10	..GRAPHIC ..ADHESIF	1					
16	6X6–48216–10	..GRAPHIC ..ADHESIF 2 GAUCHE	1					
17	6X6–48167–10	.PLUG .BOUCHON	1					
18	6X6–48167–20	.PLUG .BOUCHON	1					
19	6X6–48167–60	.PLUG .BOUCHON	2					
20	6X6–48219–10	.COVER, LEAD .COUVERCLE	1					
21	6X6–48219–20	.COVER, LEAD .COUVERCLE	1					
22	6X6–8259E–00	.SWITCH ASSY .COMMUTATEUR COMPLET	1					
23	92990–05200	.WASHER, PLAIN .RONDELLE, PLATE	10					
24	6X6–48176–10	.GROMMET .PASSE-FIL	1					
25	6X6–48225–00	.COVER .COUVERCLE	1					

6X6 REMOTE CONTROL (TWIN)

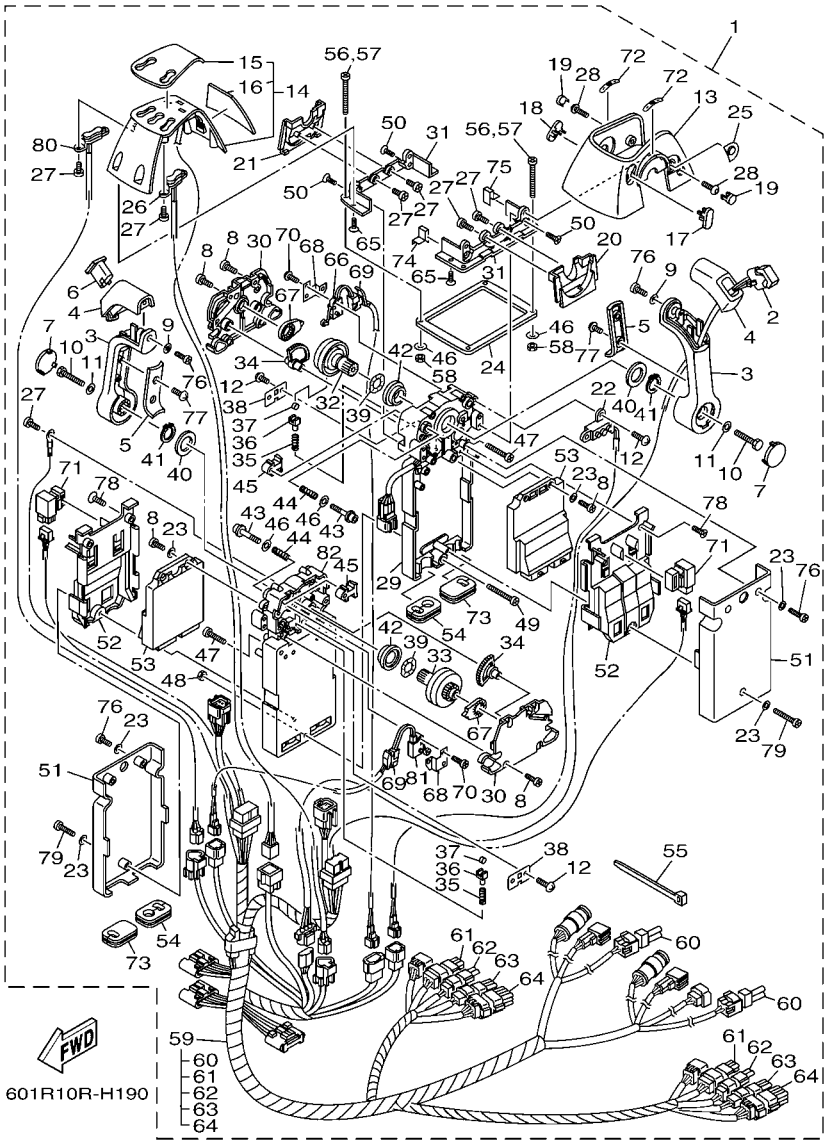

FIG. 19 DBW REMOTE CONTROL 2 (TWIN) BOITIER COMMANDE 2 (DOUBLE)

REF. NO.	PART NO. N° PIECES	DESCRIPTION DESCRIPTION	602R					REMARKS REMARQUES
26	6X6–82563–10	.TRIM & TILT SWITCH ASSY .INCLINER ET PARER COMMUTATEUR	1					
27	98580–04010	.SCREW, PAN HEAD .VIS	9					
28	92D80–05016	.BOLT, SOCKET HEAD .BOULON	2					
29	6X6–481A0–01	.REMO-CON. CASE ASSY .BOITIER ENS.	1					
30	6X6–48212–00	.BACK PLATE 1 .PLAQUETTE 1	2					
31	6X6–48144–10	.PLATE, STOPPER 2 .PLAQUETTE 2	2					
32	6X6–48242–01	.SHAFT, DRIVE .ARBRE, MOTEUR	1					
33	6X6–48242–11	.SHAFT, DRIVE .ARBRE, MOTEUR	1					
34	6X6–48233–01	.GEAR 2 .PIGNON 2	2					
35	6X6–48238–00	.SPRING, DETENT .RESSORT	2					
36	6X6–48237–00	.ADAPTOR .ADAPTEUR	2					
37	6X6–48236–00	.ROLLER, DETENT .POULIE	2					
38	6X6–48189–00	.RETAINER .FLASQUE	2					
39	703–48198–00	.WASHER, WAVE .RONDELLE, ELASTIQUE ONDULEE	2					
40	6X6–48193–00	.WASHER 3 .RONDELLE 3	2					
41	6X6–48118–00	.CLIP, SHIFT LEVER .ATTACHE, LEVIER DE CHANGER	2					
42	6X6–48234–00	.BUSHING 1 .POULIE	2					
43	6X6–48267–00	.BOLT SET .BOULON ENS.	2					
44	6X6–48158–00	.SPRING 1 .RESSORT 1	2					
45	6X6–48264–00	.FRICTION, THROTTLE .FRICTION, ACCELERATION	2					
46	704–48287–00	.WASHER .RONDELLE	6					
47	98580–05025	.SCREW, PAN HEAD .VIS	2					
48	704–48156–00	.NUT 1 .ECROU 1	1					
49	704–48283–00	.SCREW .VIS	1					
50	98780–05014	.SCREW, FLAT HEAD .VIS A TETE FRAISEE	4					
51	6X6–48213–00	.BACK PLATE 2 .PLAQUETTE 2	2					
52	6X6–48228–00	.HOLDER, SWITCH .SUPPORT	2					

FIG. 19 DBW REMOTE CONTROL 2 (TWIN) BOITIER COMMANDE 2 (DOUBLE)

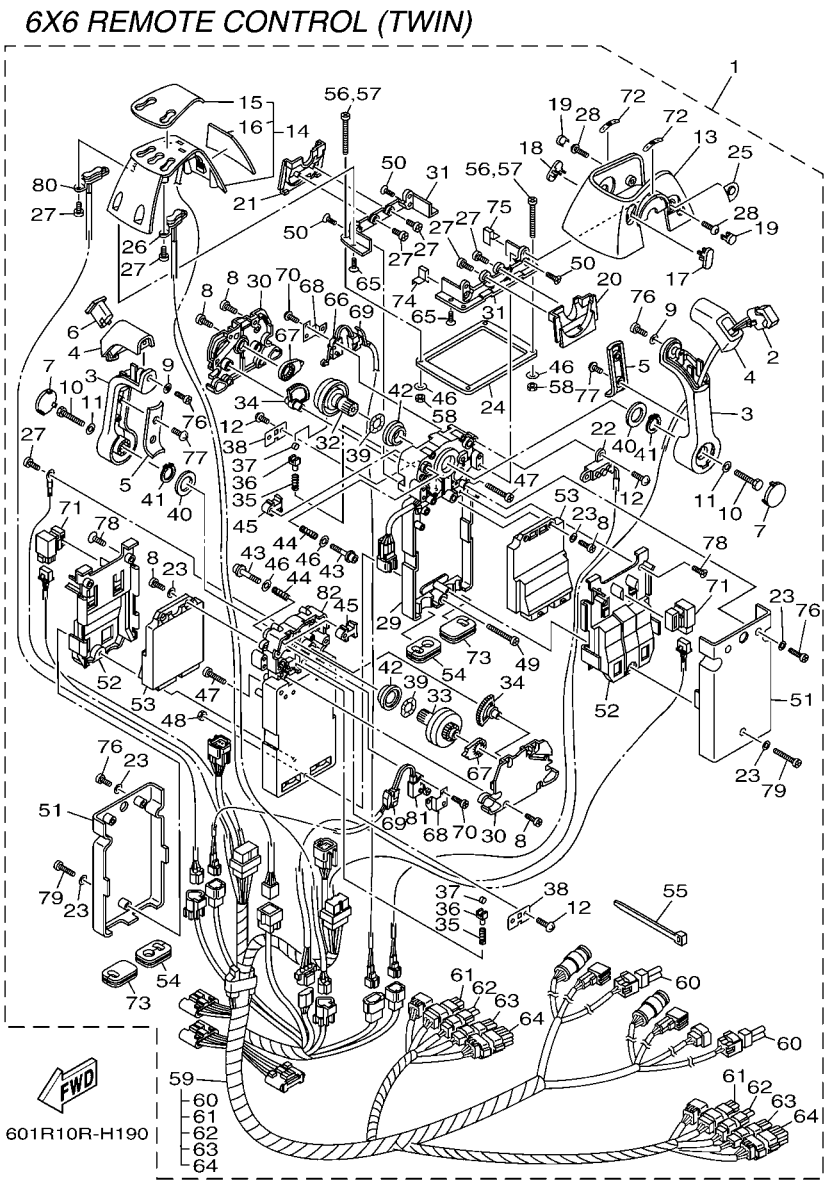

REF. NO.	PART NO. N° PIECES	DESCRIPTION DESCRIPTION	602R					REMARKS REMARQUES
53	6X6–85590–10	.CONTROL UNIT ASSY .BLOC DE CONTROLE	2					1 STATION 1 STATION
	6X6–85590–00	.CONTROL UNIT ASSY .BLOC DE CONTROLE	2					2 STATION 2 STATION
54	6X6–48175–00	.BOOT .SOUFFLET	2					1 STATION 1 STATION
	6X6–48175–00	.BOOT .SOUFFLET	4					2 STATION 2 STATION
55	703–82591–00	.BAND .COLLIER	6					1 STATION 1 STATION
	703–82591–00	.BAND .COLLIER	8					2 STATION 2 STATION
56	97780–50145	.SCREW, TAPPING .VIS, TETE BOMBEE	4					
57	98580–05060	.SCREW, PAN HEAD .VIS	4					
58	95380–05600	.NUT .ECROU	4					
59	6X6–82590–10	.WIRE HARNESS ASSY .FAISCEAU DE FILS COMPLET	1					1 STATION 1 STATION
	6X6–82590–30	.WIRE HARNESS ASSY .FAISCEAU DE FILS COMPLET	1					2 STATION MAIN 2 STATION MAIN
	6X6–82590–60	.WIRE HARNESS ASSY .FAISCEAU DE FILS COMPLET	1					2 STATION SUB 2 STATION SUB
60	6X6–82585–20	..CAP 2 (2P) ..COUVERCLE 2 (2P)	2					
61	6X6–82582–60	..CAP 1 (6P) ..BOUCHON 1 (6P)	2					FOR 6X6-82590-30 FOR 6X6-82590-30
62	6X6–82582–40	..CAP 1 (4P) ..BOUCHON 1 (4P)	2					FOR 6X6-82590-30 FOR 6X6-82590-30
63	6X6–82582–30	..CAP 1 (3P) ..BOUCHON 1 (3P)	2					FOR 6X6-82590-30 FOR 6X6-82590-30
64	6X6–82582–B0	..CAP 1 (12P) ..BOUCHON 1 (12P)	2					FOR 6X6-82590-30 FOR 6X6-82590-30
65	6X6–48129–00	.SCREW 3 .VIS 3	4					
66	6X6–82540–00	.NEUTRAL SWITCH ASSY .CONTACTEUR DE POINT-MORT	1					
67	6X6–48241–00	.ARM, DRIVE .BRAS, COMMANDE	2					
68	6X6–48245–01	.PLATE, LOCK .PLAQUE, VERROU	2					
69	6X6–82545–00	.GROMMET .PASSE-FIL	2					
70	6X6–8252V–00	.SCREW, SPECIAL .VIS, SPECIALE	4					
71	704–81950–10	.RELAY ASSY .RELAIS COMPLET	2					
72	6X6–44191–00	.INDICATOR, SHIFT .ETIQUETTE, EMBRAYAGE	2					
73	6X6–48175–10	.BOOT .SOUFFLET	2					1 STATION ONLY 1 STATION ONLY
74	6X6–48176–50	.GROMMET .PASSE-FIL	1					

FIG. 19 DBW REMOTE CONTROL 2 (TWIN) BOITIER COMMANDE 2 (DOUBLE)

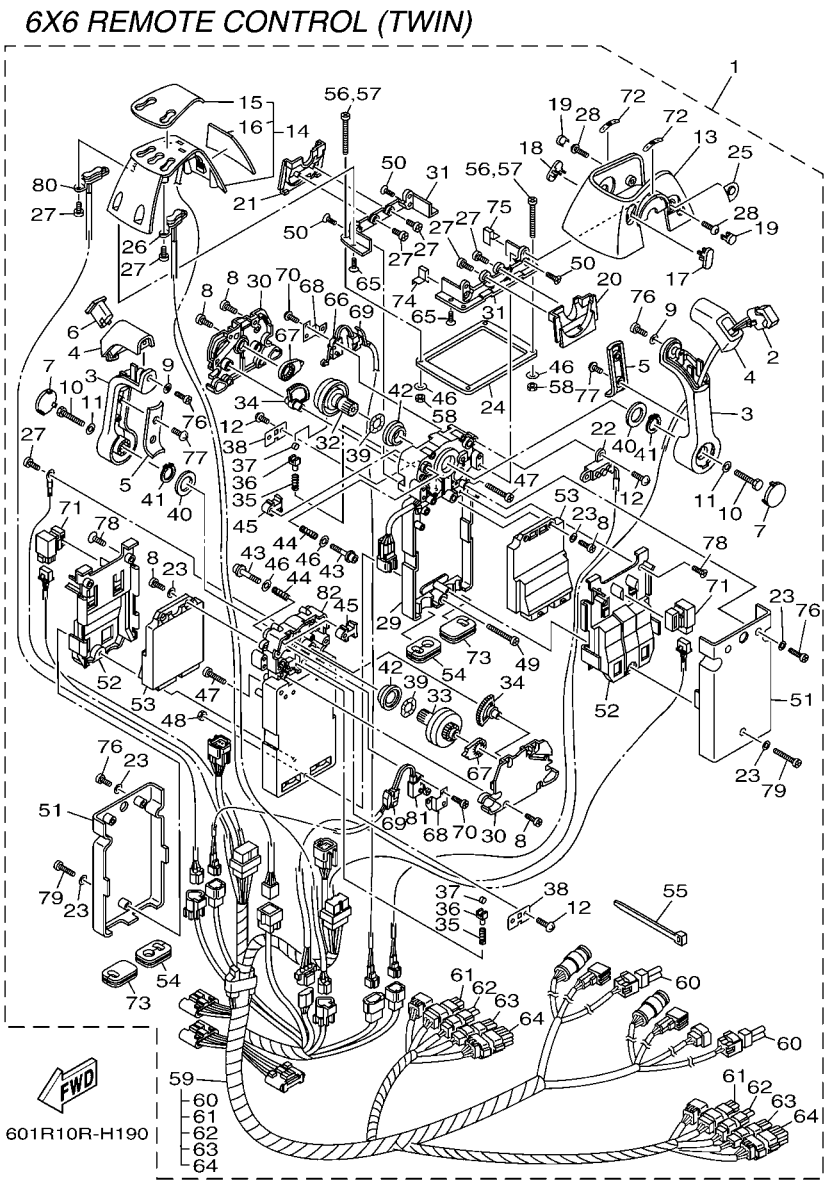

REF. NO.	PART NO. N° PIECES	DESCRIPTION DESCRIPTION	602R					REMARKS REMARQUES
75	6X6–48176–60	.GROMMET .PASSE-FIL	1					
76	6X6–48127–00	.SCREW 1 .VIS 1	6					
77	6X6–48128–00	.SCREW 2 .VIS 2	4					
78	6X6–81146–00	.SCREW 2 .VIS 2	4					
79	6X6–81145–00	.SCREW 1 .VIS 1	2					
80	6X6–82563–20	.TRIM & TILT SWITCH ASSY .INCLINER ET PARER COMMUTATEUR	1					
81	6X6–82540–10	.NEUTRAL SWITCH ASSY .CONTACTEUR DE POINT-MORT	1					
82	6X6–481A0–21	.REMO-CON. CASE ASSY .BOITIER ENS.	1					

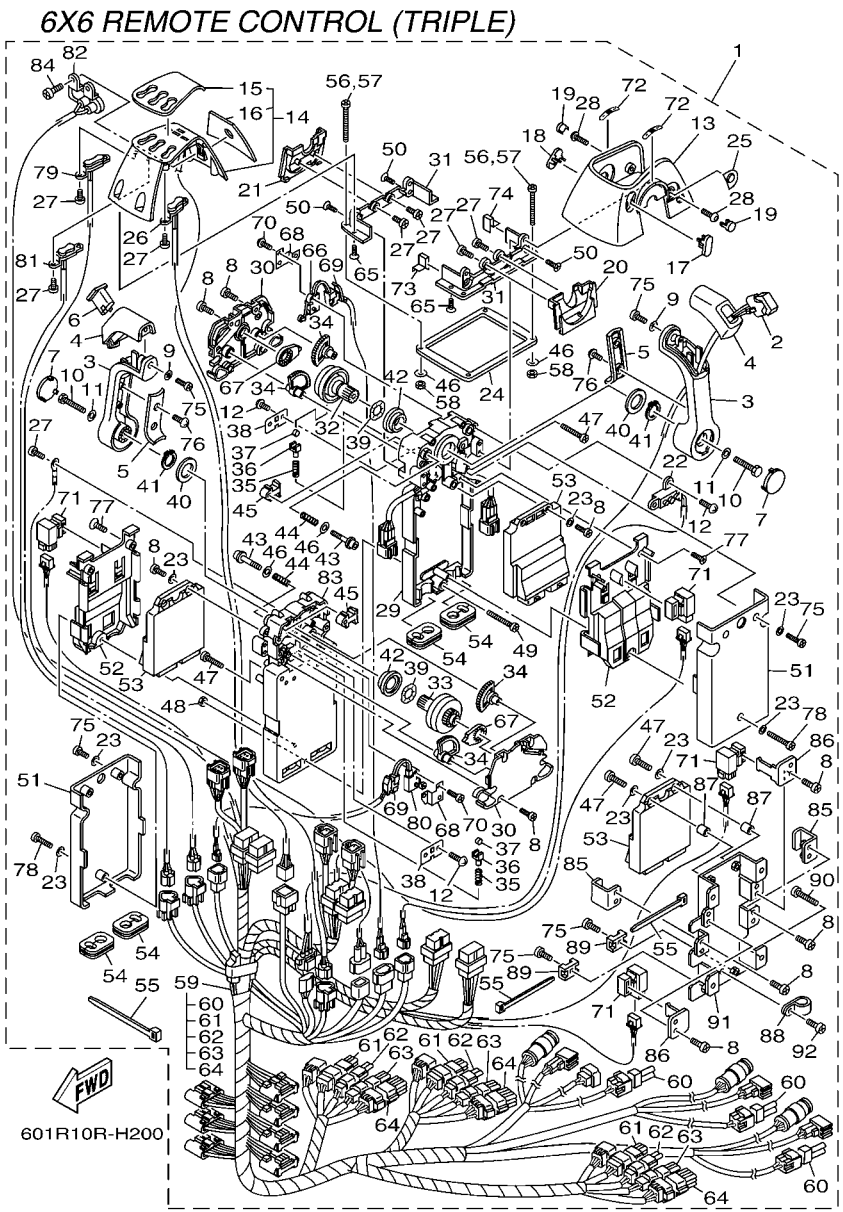

FIG. 20 DBW REMOTE CONTROL 3 (TRIPLE) BOITIER COMMANDE 3 (TROIS)

REF. NO.	PART NO. N° PIECES	DESCRIPTION DESCRIPTION	602R					REMARKS REMARQUES
1	6X6–48208–20	REMOTE CONTROL ASSY BOITIER DE COMMANDE A DISTANCE	1					NOT FOR SALE NOT FOR SALE
	6X6–48208–30	REMOTE CONTROL ASSY BOITIER DE COMMANDE A DISTANCE	1					NOT FOR SALE NOT FOR SALE
2	6X6–82563–00	.TRIM & TILT SWITCH ASSY .INCLINER ET PARER COMMUTATEUR	1					
3	6X6–48221–00	.LEVER, CONTROL .LEVIER, COMMANDE	2					
4	6X6–48222–00	.GRIP, CONTROL LEVER .POIGNEE, COMMANDE LEVIER	2					
5	6X6–48224–00	.COVER, CONTROL LEVER .COUVERCLE	2					
6	6X6–48222–10	.GRIP, CONTROL LEVER .POIGNEE, COMMANDE LEVIER	1					
7	6X6–48224–10	.COVER, CONTROL LEVER .COUVERCLE	2					
8	98580–05014	.SCREW, PAN HEAD .VIS	20					
9	92990–05300	.WASHER, INTERNAL TOOTH .RONDELLE, DENTURE INTERNE	2					
10	6X6–48171–00	.BOLT .BOULON	2					
11	92990–08600	.WASHER, PLATE .RONDELLE, PLATE	2					
12	EL8–48127–00	.SCREW 1 .VIS 1	6					
13	6X6–48119–10	.COVER .COQUILLE	1					
14	6X6–84301–22	.PILOT LIGHT ASSY 1 .LAMPE-TEMOIN 1	1					
15	6X6–48215–20	..GRAPHIC ..ADHESIF	1					
16	6X6–48216–20	..GRAPHIC ..ADHESIF 2 GAUCHE	1					
17	6X6–48167–10	.PLUG .BOUCHON	1					
18	6X6–48167–20	.PLUG .BOUCHON	1					
19	6X6–48167–60	.PLUG .BOUCHON	2					
20	6X6–48219–10	.COVER, LEAD .COUVERCLE	1					
21	6X6–48219–20	.COVER, LEAD .COUVERCLE	1					
22	6X6–8259E–00	.SWITCH ASSY .COMMUTATEUR COMPLET	1					
23	92990–05200	.WASHER, PLAIN .RONDELLE, PLATE	12					
24	6X6–48176–10	.GROMMET .PASSE-FIL	1					
25	6X6–48225–00	.COVER .COUVERCLE	1					
26	6X6–82563–10	.TRIM & TILT SWITCH ASSY .INCLINER ET PARER COMMUTATEUR	1					

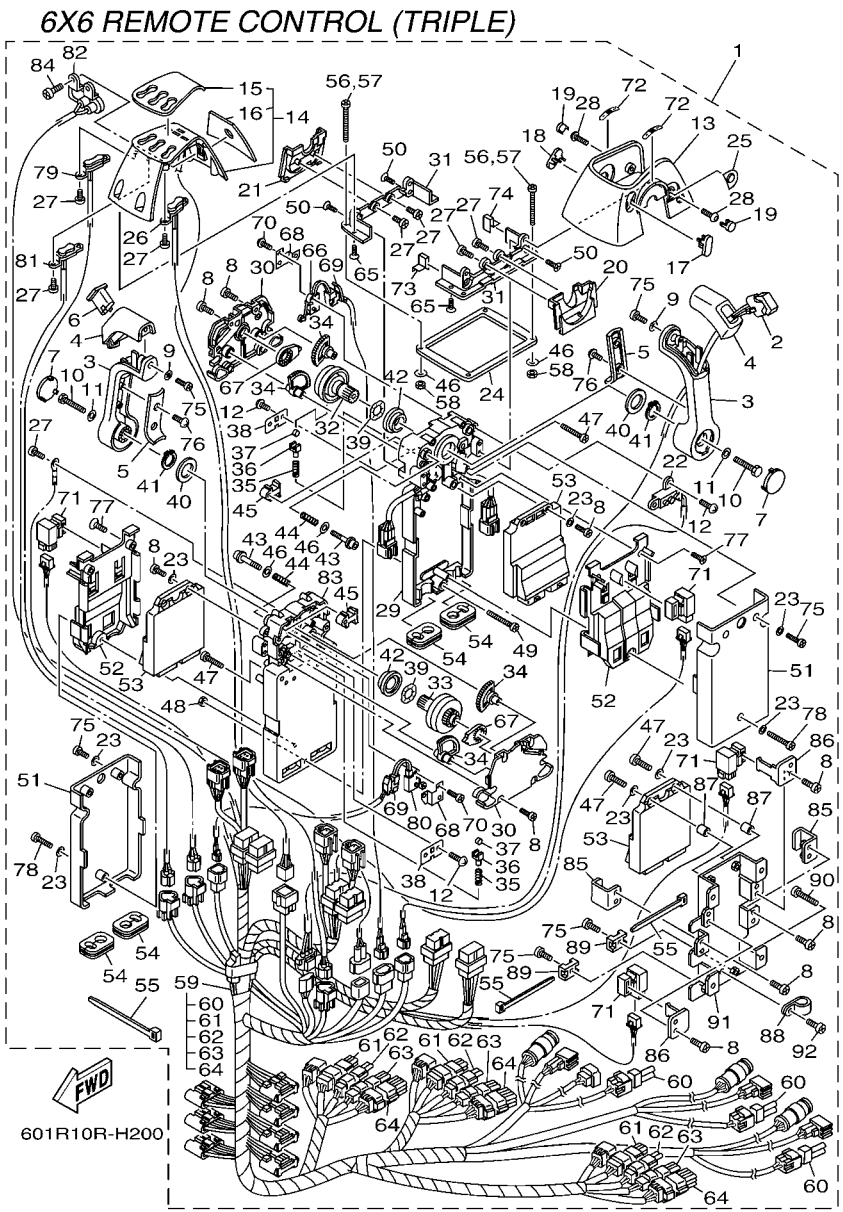

FIG. 20 DBW REMOTE CONTROL 3 (TRIPLE) BOITIER COMMANDE 3 (TROIS)

REF. NO.	PART NO. N° PIECES	DESCRIPTION DESCRIPTION	602R					REMARKS REMARQUES
27	98580–04010	.SCREW, PAN HEAD .VIS	11					
28	92D80–05016	.BOLT, SOCKET HEAD .BOULON	2					
29	6X6–481A0–11	.REMO-CON. CASE ASSY .BOITIER ENS.	1					
30	6X6–48212–00	.BACK PLATE 1 .PLAQUETTE 1	2					
31	6X6–48144–10	.PLATE, STOPPER 2 .PLAQUETTE 2	2					
32	6X6–48242–01	.SHAFT, DRIVE .ARBRE, MOTEUR	1					
33	6X6–48242–11	.SHAFT, DRIVE .ARBRE, MOTEUR	1					
34	6X6–48233–01	.GEAR 2 .PIGNON 2	4					
35	6X6–48238–00	.SPRING, DETENT .RESSORT	2					
36	6X6–48237–00	.ADAPTOR .ADAPTEUR	2					
37	6X6–48236–00	.ROLLER, DETENT .POULIE	2					
38	6X6–48189–00	.RETAINER .FLASQUE	2					
39	703–48198–00	.WASHER, WAVE .RONDELLE, ELASTIQUE ONDULEE	2					
40	6X6–48193–00	.WASHER 3 .RONDELLE 3	2					
41	6X6–48118–00	.CLIP, SHIFT LEVER .ATTACHE, LEVIER DE CHANGER	2					
42	6X6–48234–00	.BUSHING 1 .POULIE	2					
43	6X6–48267–00	.BOLT SET .BOULON ENS.	2					
44	6X6–48158–00	.SPRING 1 .RESSORT 1	2					
45	6X6–48264–00	.FRICTION, THROTTLE .FRICTION, ACCELERATION	2					
46	704–48287–00	.WASHER .RONDELLE	6					
47	98580–05025	.SCREW, PAN HEAD .VIS	4					
48	704–48156–00	.NUT 1 .ECROU 1	1					
49	704–48283–00	.SCREW .VIS	1					
50	98780–05014	.SCREW, FLAT HEAD .VIS A TETE FRAISEE	4					
51	6X6–48213–00	.BACK PLATE 2 .PLAQUETTE 2	2					
52	6X6–48228–00	.HOLDER, SWITCH .SUPPORT	2					
53	6X6–85590–00	.CONTROL UNIT ASSY .BLOC DE CONTROLE	3					

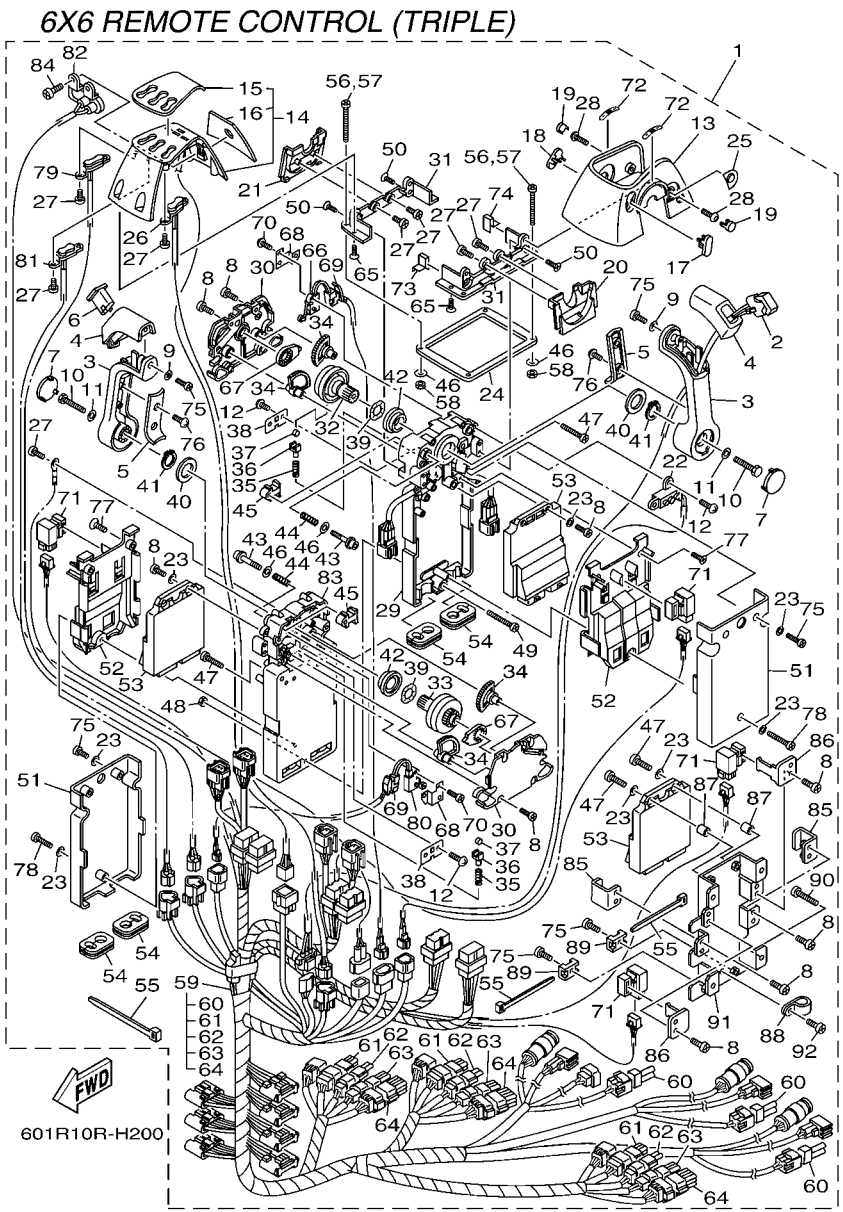

FIG. 20 DBW REMOTE CONTROL 3 (TRIPLE) BOITIER COMMANDE 3 (TROIS)

REF. NO.	PART NO. N° PIECES	DESCRIPTION DESCRIPTION	602R					REMARKS REMARQUES
54	6X6–48175–00	.BOOT .SOUFFLET	4					
55	703–82591–00	.BAND .COLLIER	10					
56	97780–50145	.SCREW, TAPPING .VIS, TETE BOMBEE	4					
57	98580–05060	.SCREW, PAN HEAD .VIS	4					
58	95380–05600	.NUT .ECROU	4					
59	6X6–82590–80	.WIRE HARNESS ASSY .FAISCEAU DE FILS COMPLET	1					2 STATION MAIN 2 STATION MAIN
	6X6–82590–90	.WIRE HARNESS ASSY .FAISCEAU DE FILS COMPLET	1					2 STATION SUB 2 STATION SUB
60	6X6–82585–20	..CAP 2 (2P) ..COUVERCLE 2 (2P)	3					
61	6X6–82582–60	..CAP 1 (6P) ..BOUCHON 1 (6P)	3					FOR 6X6-82590-80 FOR 6X6-82590-80
62	6X6–82582–40	..CAP 1 (4P) ..BOUCHON 1 (4P)	3					FOR 6X6-82590-80 FOR 6X6-82590-80
63	6X6–82582–30	..CAP 1 (3P) ..BOUCHON 1 (3P)	3					FOR 6X6-82590-80 FOR 6X6-82590-80
64	6X6–82582–B0	..CAP 1 (12P) ..BOUCHON 1 (12P)	3					FOR 6X6-82590-80 FOR 6X6-82590-80
65	6X6–48129–00	.SCREW 3 .VIS 3	4					
66	6X6–82540–00	.NEUTRAL SWITCH ASSY .CONTACTEUR DE POINT-MORT	1					
67	6X6–48241–00	.ARM, DRIVE .BRAS, COMMANDE	2					
68	6X6–48245–01	.PLATE, LOCK .PLAQUE, VERROU	2					
69	6X6–82545–00	.GROMMET .PASSE-FIL	2					
70	6X6–8252V–00	.SCREW, SPECIAL .VIS, SPECIALE	4					
71	704–81950–10	.RELAY ASSY .RELAIS COMPLET	4					
72	6X6–44191–00	.INDICATOR, SHIFT .ETIQUETTE, EMBRAYAGE	2					
73	6X6–48176–50	.GROMMET .PASSE-FIL	1					
74	6X6–48176–60	.GROMMET .PASSE-FIL	1					
75	6X6–48127–00	.SCREW 1 .VIS 1	8					
76	6X6–48128–00	.SCREW 2 .VIS 2	4					
77	6X6–81146–00	.SCREW 2 .VIS 2	4					
78	6X6–81145–00	.SCREW 1 .VIS 1	2					
79	6X6–82563–20	.TRIM & TILT SWITCH ASSY .INCLINER ET PARER COMMUTATEUR	1					

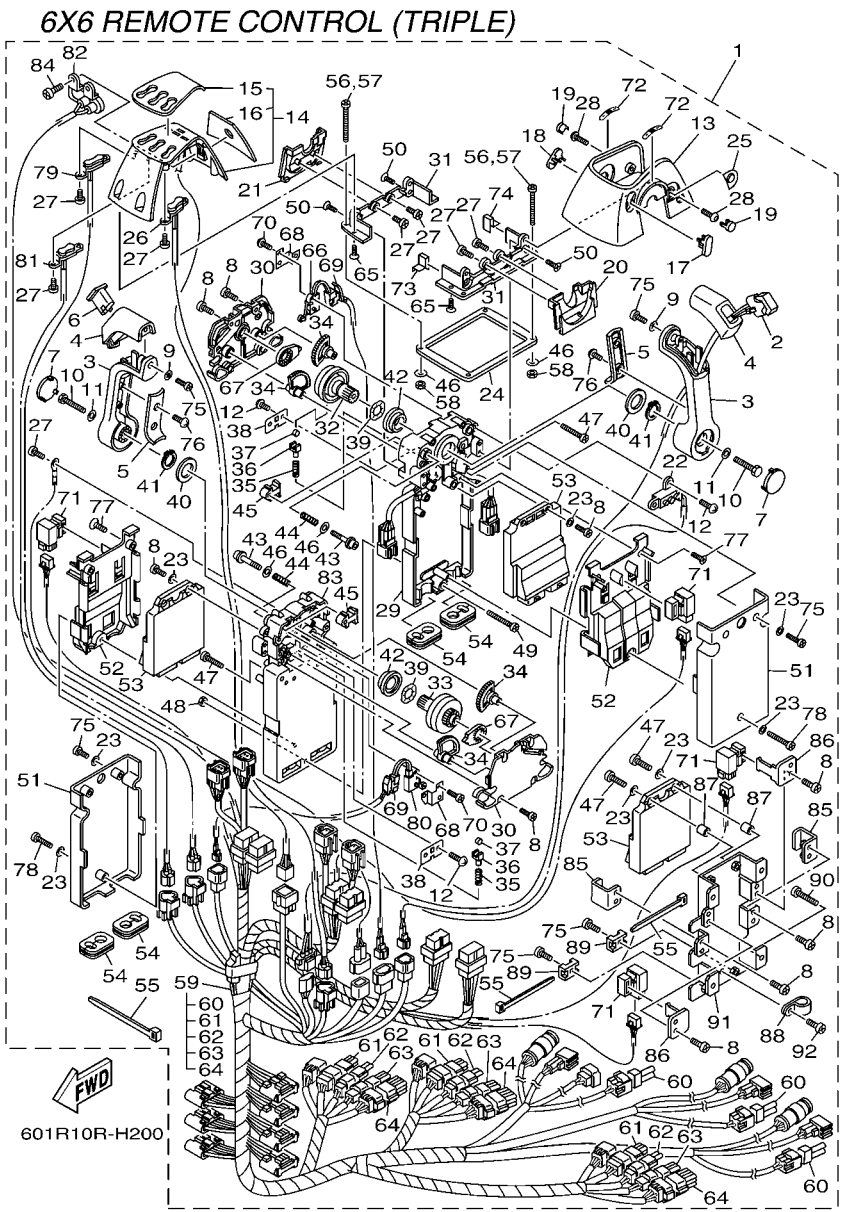

FIG. 20 DBW REMOTE CONTROL 3 (TRIPLE) BOITIER COMMANDE 3 (TROIS)

REF. NO.	PART NO. N° PIECES	DESCRIPTION DESCRIPTION	602R					REMARKS REMARQUES
80	6X6–82540–10	.NEUTRAL SWITCH ASSY .CONTACTEUR DE POINT-MORT	1					
81	6X6–82563–30	.TRIM & TILT SWITCH ASSY .INCLINER ET PARER COMMUTATEUR	1					
82	6X6–8259F–00	.SWITCH ASSY .COMMUTATEUR	1					
83	6X6–481A0–31	.REMO-CON. CASE ASSY .BOITIER ENS.	1					
84	98780–05010	.SCREW, FLAT HEAD .VIS A TETE FRAISEE	2					
85	6X6–85557–00	.HOLDER .SUPPORT	2					
86	6X6–82591–00	.BAND .COLLIER	2					
87	6X6–8252S–00	.SPACER, 1 .ENTRETOISE	2					
88	6X6–82584–00	.CLAMP .COLLIER	1					
89	6X6–82581–00	.STAY, CORD CLAMP .SUPPORT, COLLIER DE CORDON	2					
90	6X0–48128–00	.SCREW(M6X30) .VIS 2	4					
91	6X6–48211–10	.HOUSING,1 .CORPS	1					
92	6X7–48127–00	.SCREW 1 .VIS 1	1					

REMOTE CONTROL SPECIFICATION LIST (6X7 TYPE)

TYPE : 6X7	MECHANICAL SPECIFICATION							
TYPE : 6X7	LIST UP SEC.	TYPE CODE	SERIAL NO.	ENGINE			HANDLE POSITION	
PART NO.	FIG.NO.-REF.NO.			SINGLE	TWIN	TRIPLE	RIGHT	LEFT
6X7-48206-00	21-1	A	6X7:0000001-	○	*	*	○	*

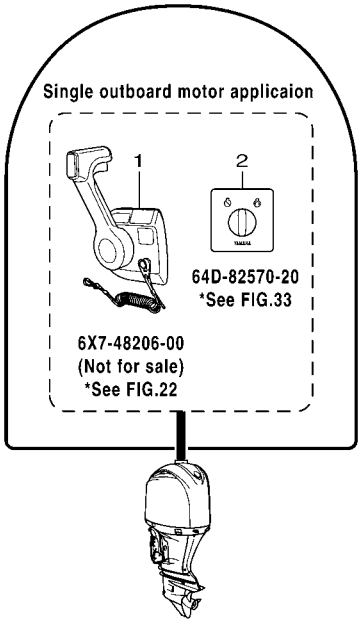

601R10R-H210

FIG. 21 LAYOUT CHART 4 (6X7) DIAGRAMME 4 (6X7)

REF. NO.	PART NO. N° PIECES	DESCRIPTION DESCRIPTION	602R					REMARKS REMARQUES
1	6X7–48206–00	REMOTE CONTROL ASSY MONO LEVIER GAUCHE AVEC TRIM	1					NOT FOR SALE NOT FOR SALE
2	64D–82570–20	PANEL SWITCH ASSY PLATINE D'INTERRUPEUR CPLT	1					

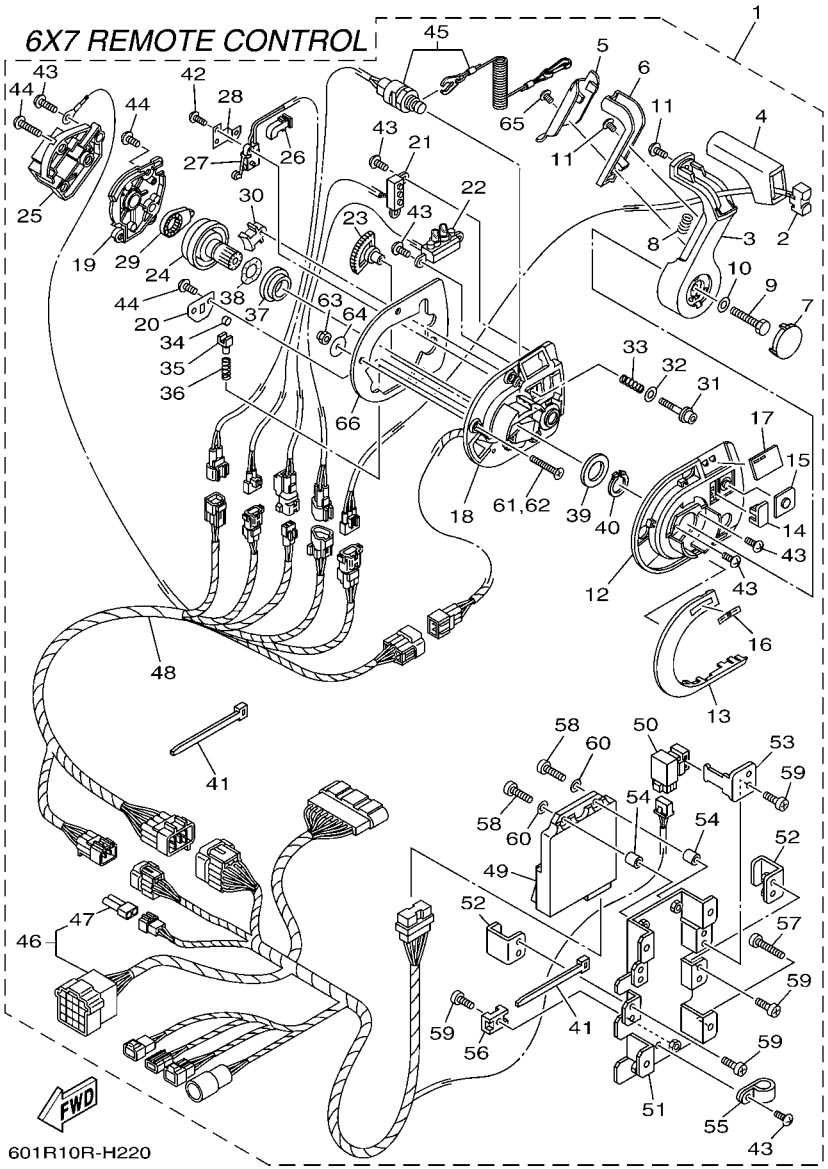

FIG. 22 DBW REMOTE CONTROL 4 (6X7) BOITIER COMMANDE 4 (6X7)

REF. NO.	PART NO. N° PIECES	DESCRIPTION DESCRIPTION	602R					REMARKS REMARQUES
1	6X7–48206–00	REMOTE CONTROL ASSY MONO LEVIER GAUCHE AVEC TRIM	1					NOT FOR SALE NOT FOR SALE
2	6X7–82563–00	.TRIM & TILT SWITCH ASSY .INCLINER ET PARER COMMUTATEUR	1					
3	6X7–48221–00	.LEVER, CONTROL .LEVIER, COMMANDE	1					
4	6X7–48222–00	.GRIP, CONTROL LEVER .POIGNEE, COMMANDE LEVIER	1					
5	6X7–48224–00	.COVER, CONTROL LEVER .COUVERCLE	1					
6	6X7–48223–00	.LOCK, NEUTRAL .VERROU, NEUTRAL	1					
7	6X7–48224–10	.COVER, CONTROL LEVER .COUVERCLE	1					
8	703–48227–00	.SPRING, NEUTRAL LOCK .RESSORT	1					
9	6X6–48171–00	.BOLT .BOULON	1					
10	92990–08600	.WASHER, PLATE .RONDELLE, PLATE	1					
11	6X6–48128–00	.SCREW 2 .VIS 2	2					
12	6X7–48119–00	.COVER .COQUILLE	1					
13	6X7–48167–10	.PLUG .BOUCHON	1					
14	6X7–48167–00	.PLUG .BOUCHON	1					
15	6X7–48225–00	.COVER .COUVERCLE	1					
16	6X7–44191–00	.INDICATOR, SHIFT .ETIQUETTE, EMBRAYAGE	1					
17	6X7–48215–00	.GRAPHIC .ADHESIF	1					
18	6X7–481A0–01	.REMO-CON. CASE ASSY .BOITIER ENS.	1					
19	6X7–48212–00	.BACK PLATE 1 .PLAQUETTE 1	1					
20	6X7–48189–00	.RETAINER .FLASQUE	1					
21	6X7–8259E–00	.SWITCH ASSY .COMMUTATEUR COMPLET	1					
22	6X7–84301–00	.PILOT LIGHT ASSY 1 .LAMPE-TEMOIN 1	1					
23	6X7–48233–00	.GEAR 2 .PIGNON 2	1					
24	6X7–48242–00	.SHAFT, DRIVE .ARBRE, MOTEUR	1					
25	6X7–48228–00	.HOLDER, SWITCH .SUPPORT	1					
26	6X7–82545–00	.GROMMET .PASSE-FIL	1					
27	6X6–82540–00	.NEUTRAL SWITCH ASSY .CONTACTEUR DE POINT-MORT	1					

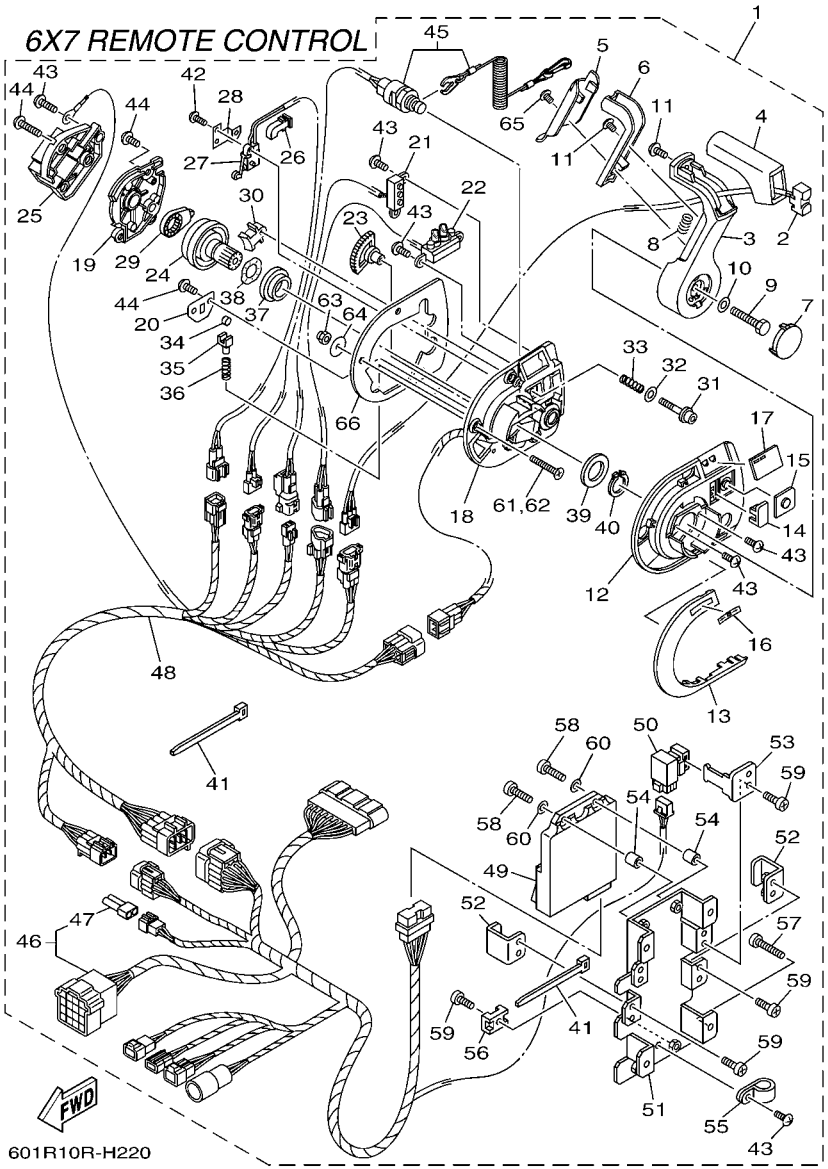

FIG. 22 DBW REMOTE CONTROL 4 (6X7) BOITIER COMMANDE 4 (6X7)

REF. NO.	PART NO. N° PIECES	DESCRIPTION DESCRIPTION	602R					REMARKS REMARQUES
28	6X6–48245–01	.PLATE, LOCK .PLAQUE, VERROU	1					
29	6X6–48241–00	.ARM, DRIVE .BRAS, COMMANDE	1					
30	6X6–48264–00	.FRICTION, THROTTLE .FRICTION, ACCELERATION	1					
31	6X6–48267–00	.BOLT SET .BOULON ENS.	1					
32	704–48287–00	.WASHER .RONDELLE	1					
33	6X6–48158–00	.SPRING 1 .RESSORT 1	1					
34	6X6–48236–00	.ROLLER, DETENT .POULIE	1					
35	6X6–48237–00	.ADAPTOR .ADAPTEUR	1					
36	6X6–48238–00	.SPRING, DETENT .RESSORT	1					
37	6X6–48234–00	.BUSHING 1 .POULIE	1					
38	703–48198–00	.WASHER, WAVE .RONDELLE, ELASTIQUE ONDULEE	1					
39	6X6–48193–00	.WASHER 3 .RONDELLE 3	1					
40	6X6–48118–00	.CLIP, SHIFT LEVER .ATTACHE, LEVIER DE CHANGER	1					
41	703–82591–00	.BAND .COLLIER	3					
42	6X6–8252V–00	.SCREW, SPECIAL .VIS, SPECIALE	2					
43	6X7–48127–00	.SCREW 1 .VIS 1	8					
44	EL8–48127–00	.SCREW 1 .VIS 1	8					
45	6X7–82575–00	.ENGINE STOP SWITCH ASSY .COUPE CIRCUIT CPLT	1					
46	6X7–82590–10	.WIRE HARNESS ASSY .FAISCEAU DE FILS COMPLET	1					
47	6X6–82585–20	..CAP 2 (2P) ..COUVERCLE 2 (2P)	1					
48	6X7–82590–00	.WIRE HARNESS ASSY .FAISCEAU DE FILS COMPLET	1					
49	6X6–85590–10	.CONTROL UNIT ASSY .BLOC DE CONTROLE	1					
50	704–81950–10	.RELAY ASSY .RELAIS COMPLET	1					
51	6X6–48211–10	.HOUSING,1 .CORPS	1					
52	6X6–85557–00	.HOLDER .SUPPORT	2					
53	6X6–82591–00	.BAND .COLLIER	1					
54	6X6–8252S–00	.SPACER, 1 .ENTRETOISE	2					

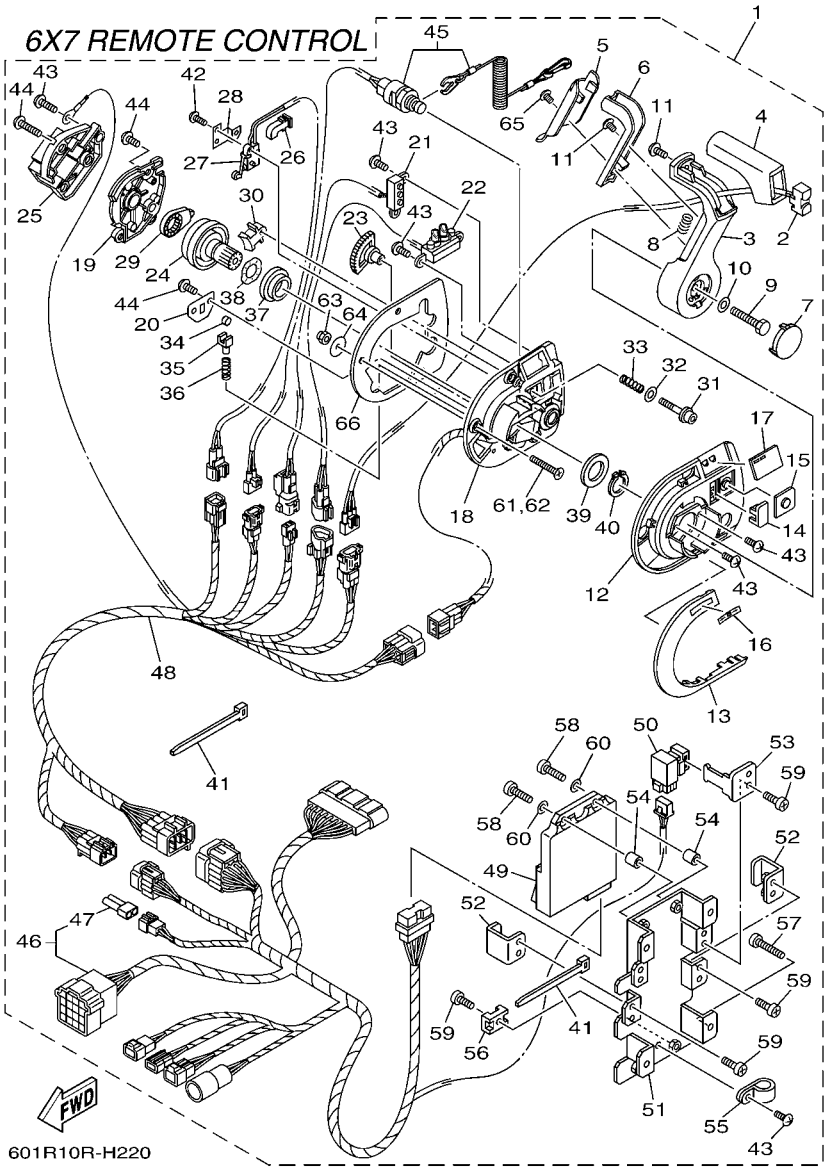

FIG. 22 DBW REMOTE CONTROL 4 (6X7) BOITIER COMMANDE 4 (6X7)

REF. NO.	PART NO. N° PIECES	DESCRIPTION DESCRIPTION	602R					REMARKS REMARQUES
55	6X6–82584–00	.CLAMP .COLLIER	1					
56	6X6–82581–00	.STAY, CORD CLAMP .SUPPORT, COLLIER DE CORDON	1					
57	6X0–48128–00	.SCREW(M6X30) .VIS 2	4					
58	98580–05025	.SCREW, PAN HEAD .VIS	2					
59	98580–05014	.SCREW, PAN HEAD .VIS	7					
60	92990–05200	.WASHER, PLAIN .RONDELLE, PLATE	2					
61	98780–06035	.SCREW, FLAT HEAD .VIS A TETE FRAISEE	3					
62	97780–06230	.SCREW, TAPPING .VIS, TETE BOMBEE	3					
63	6X0–48156–00	.NUT 1 .ECROU 1	3					
64	701–48287–00	.WASHER .RONDELLE	3					
65	6X7–48128–00	.SCREW 2 .VIS 2	1					
66	6X7–48176–10	.GROMMET .PASSE-FIL	1					

FIG. 23 SWITCH & PANEL 1 — TABLEAU DE CONTACTEUR 1

SINGLE IG SWITCH W/ PANEL

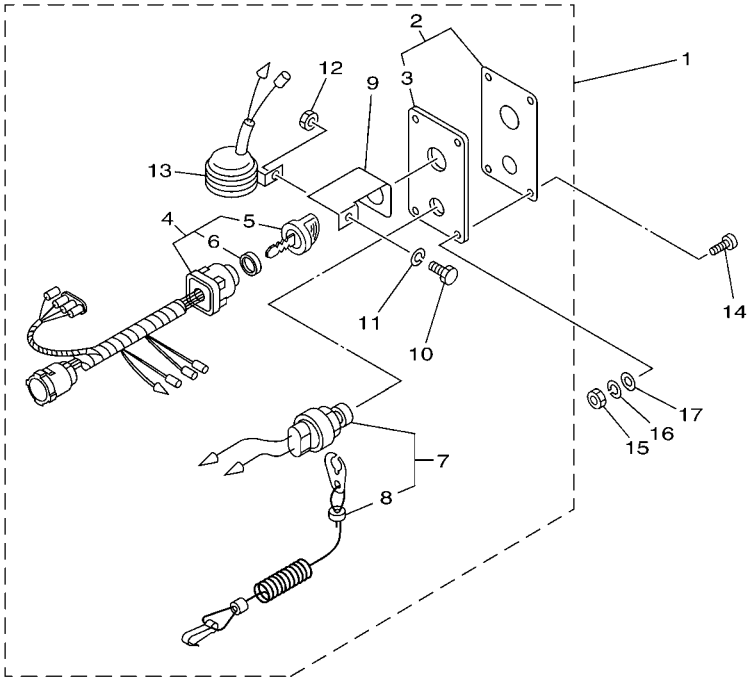

601R10R-H230

REF. NO.	PART NO. N° PIECES	DESCRIPTION DESCRIPTION	602R					REMARKS REMARQUES
1	704–82570–08	PANEL SWITCH ASSY PLATINE D'INTERRUPEUR CPLT	1					WITH CHOKE SW. WITH CHOKE SW.
2	704–82571–02	.PANEL, SWITCH .TABLEAU, CONTACTEUR	1					
3	6R5–82588–01	..PLATE ..PLAQUE	1					
4	704–82510–07	.MAIN SWITCH ASSY .CONTACTEUR A CLEF COMPLET	1					
5	703–82577–00	..CAP, KEY ..CABOCHON	1					
6	6K1–82532–00	..CAP ..COUVERCLE	1					
7	688–82575–01	.ENGINE STOP SWITCH ASSY .COUPE CIRCUIT CPLT	1					
8	682–82556–00	..LANYARD, STOP SWITCH ..PLAQUETTE	1					
9	64D–82581–00	.STAY, CORD CLAMP .SUPPORT, COLLIER DE CORDON	1					
10	97303–05012	.BOLT .BOULON	1					
11	92903–05100	.WASHER, SPRING .RONDELLE, GROWER	1					
12	95303–05700	.NUT .ECROU	1					
13	688–83383–11	.BUZZER .RONFLEUR	1					
14	90149–05M05	SCREW VIS	4					
15	95380–05600	NUT ECROU	4					
16	92990–05100	WASHER, SPRING RONDELLE, GROWER	4					
17	92990–05600	WASHER, PLATE RONDELLE, PLATE	4					

FIG. 24 SWITCH & PANEL 2 TABLEAU DE CONTACTEUR 2

SINGLE IG SWITCH W/ PANEL
(FOR PRIME START or DIGITAL NETWORK GAUGE)

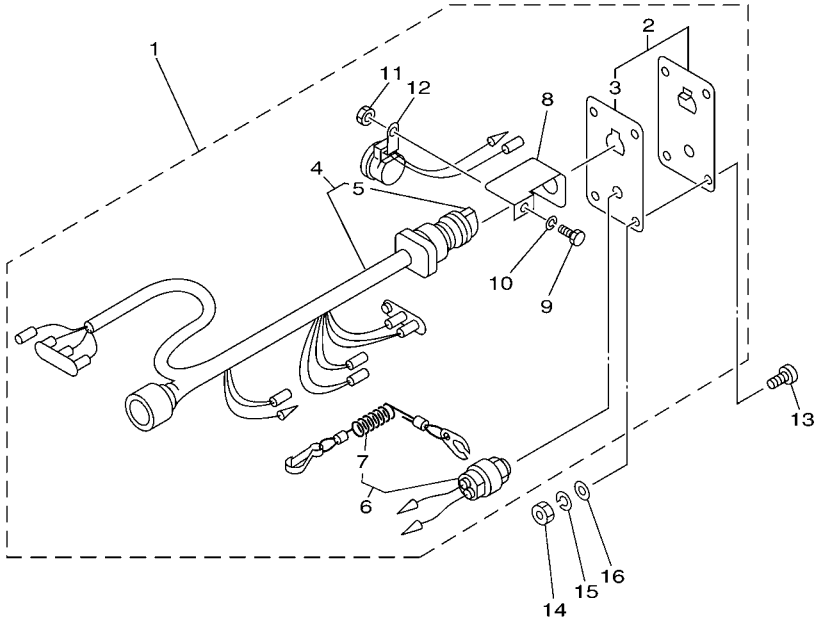

601R10R-H240

REF. NO.	PART NO. N° PIECES	DESCRIPTION DESCRIPTION	602R					REMARKS REMARQUES
1	6R5–82570–05	PANEL SWITCH ASSY PLATINE D'INTERRUPEUR CPLT	1					WITHOUT CHOKE SW. WITHOUT CHOKE SW.
2	704–82571–02	.PANEL, SWITCH .TABLEAU, CONTACTEUR	1					
3	6R5–82588–01	..PLATE ..PLAQUE	1					
4	6R5–82510–02	.MAIN SWITCH ASSY .CONTACTEUR A CLEF COMPLET	1					
5	676–82577–00	..CAP, KEY ..CABOCHON	1					
6	688–82575–01	.ENGINE STOP SWITCH ASSY .COUPE CIRCUIT CPLT	1					
7	682–82556–00	..LANYARD, STOP SWITCH ..PLAQUETTE	1					
8	64D–82581–00	.STAY, CORD CLAMP .SUPPORT, COLLIER DE CORDON	1					
9	97303–05012	.BOLT .BOULON	1					
10	92903–05100	.WASHER, SPRING .RONDELLE, GROWER	1					
11	95303–05700	.NUT .ECROU	1					
12	6R5–83383–00	.BUZZER .RONFLEUR	1					
13	90149–05M05	SCREW VIS	4					
14	95303–05600	NUT ECROU	4					
15	92903–05100	WASHER, SPRING RONDELLE, GROWER	4					
16	92903–05600	WASHER, PLATE RONDELLE, PLATE	4					

FIG. 25 SWITCH & PANEL 3 — TABLEAU DE CONTACTEUR 3

SINGLE IG SWITCH W/ PANEL
(FOR 6X6 DBW REMOTE CONTROL)

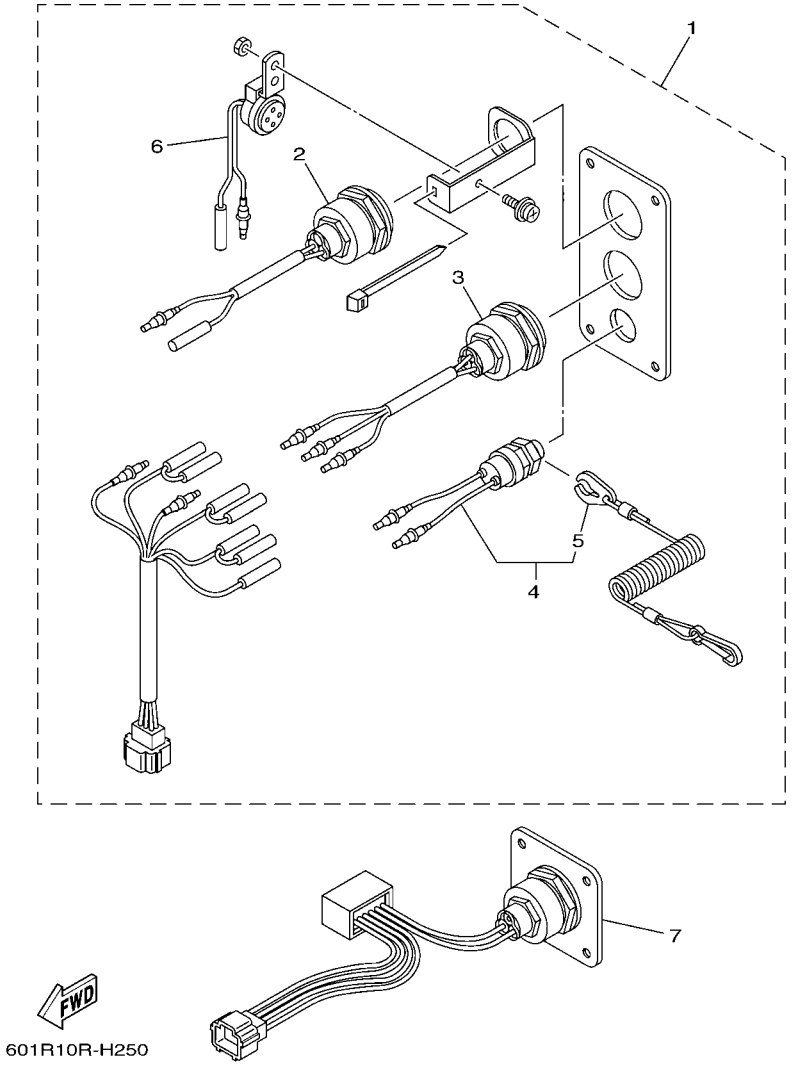

REF. NO.	PART NO. N° PIECES	DESCRIPTION DESCRIPTION	602R					REMARKS REMARQUES
1	6X6–82570–00	PANEL SWITCH ASSY (SINGLE) PLATINE D'INTERRUPEUR CPLT	1					2 STATION SUB 2 STATION SUB
2	6X1–81870–00	.STARTING SWITCH ASSY .CONTACT A CLEF	1					
3	6X1–82550–00	.ENGINE STOP SWITCH ASSY .COMMUTATEUR D'ARRET CPLT	1					
4	688–82575–01	.ENGINE STOP SWITCH ASSY .COUPE CIRCUIT CPLT	1					
5	682–82556–00	..LANYARD, STOP SWITCH ..PLAQUETTE	1					
6	6R5–83383–00	.BUZZER .RONFLEUR	1					
7	6X6–82570–A0	PANEL SWITCH ASSY PLATINE D'INTERRUPEUR CPLT	2					2 STATION SUB 2 STATION SUB

FIG. 26 SWITCH & PANEL 4 — TABLEAU DE CONTACTEUR 4

SINGLE IG SWITCH W/O PANEL

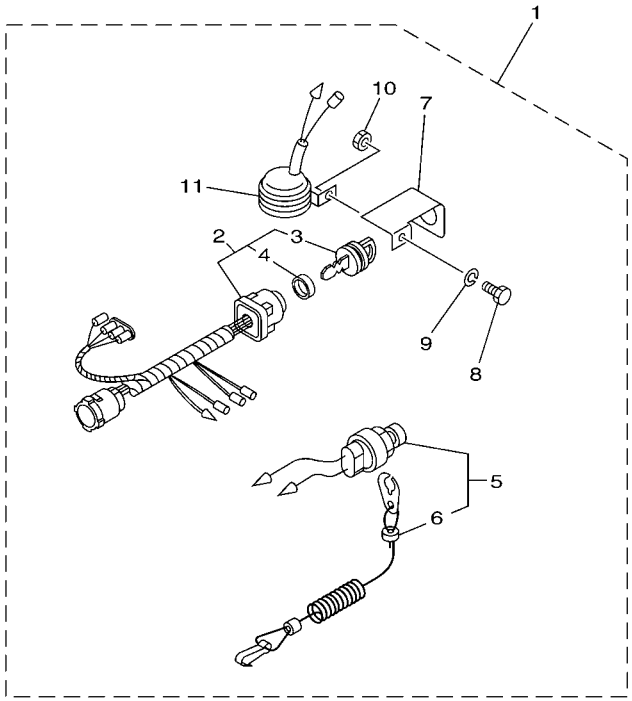

601R10R-H260

REF. NO.	PART NO. N° PIECES	DESCRIPTION DESCRIPTION	602R					REMARKS REMARQUES
1	704–8257C–00	PANEL SWITCH COMP. 2 PLATINE D'INTERRUPEUR CPLT 2	1					WITH CHOKE SW. WITH CHOKE SW.
2	704–82510–07	.MAIN SWITCH ASSY .CONTACTEUR A CLEF COMPLET	1					
3	703–82577–00	..CAP, KEY ..CABOCHON	1					
4	6K1–82532–00	..CAP ..COUVERCLE	1					
5	688–82575–01	.ENGINE STOP SWITCH ASSY .COUPE CIRCUIT CPLT	1					
6	682–82556–00	..LANYARD, STOP SWITCH ..PLAQUETTE	1					
7	64D–82581–00	.STAY, CORD CLAMP .SUPPORT, COLLIER DE CORDON	1					
8	97303–05012	.BOLT .BOULON	1					
9	92903–05100	.WASHER, SPRING .RONDELLE, GROWER	1					
10	95303–05700	.NUT .ECROU	1					
11	688–83383–11	.BUZZER .RONFLEUR	1					

FIG. 27 SWITCH & PANEL 5 — TABLEAU DE CONTACTEUR 5

TWIN IG SWITCH

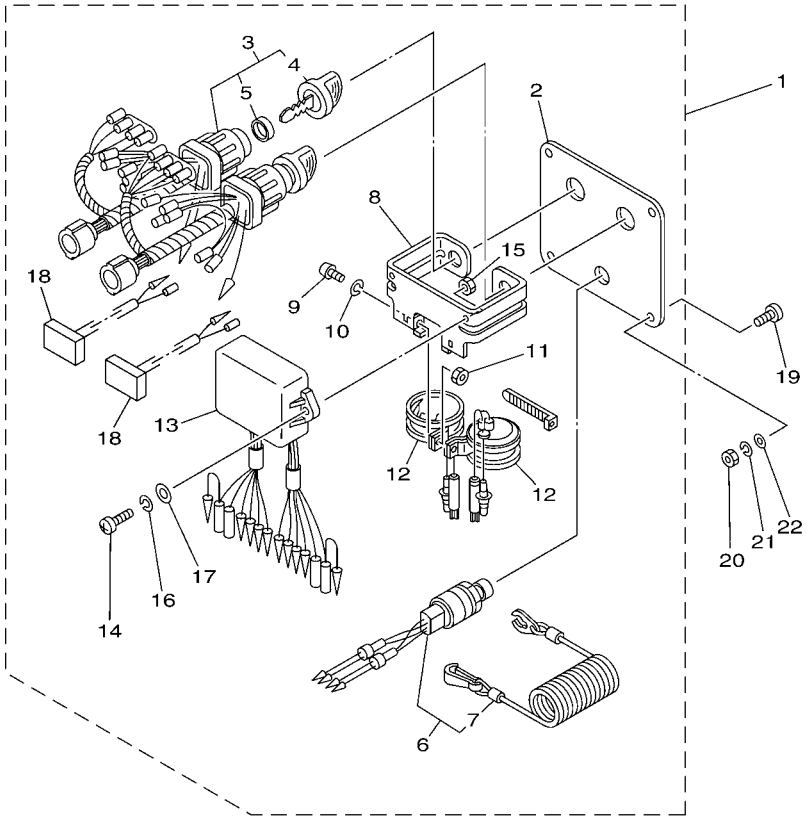

601R10R-H270

REF. NO.	PART NO. N° PIECES	DESCRIPTION DESCRIPTION	602R					REMARKS REMARQUES
1	6K1–82570–08	PANEL SWITCH ASSY PLATINE D'INTERRUPEUR CPLT	1					WITH CHOKE SW. WITH CHOKE SW.
2	6K1–82571–02	.PLATE, PANEL SWITCH .TABLEAU, CONTACTEUR	1					
3	6K1–82510–06	.MAIN SWITCH ASSY .CONTACTEUR A CLEF COMPLET	2					
4	703–82577–00	..CAP, KEY ..CABOCHON	1					
5	6K1–82532–00	..CAP ..COUVERCLE	1					
6	6K1–82575–00	.ENGINE STOP SWITCH ASSY .COUPE CIRCUIT CPLT	1					
7	682–82556–00	..LANYARD, STOP SWITCH ..PLAQUETTE	1					
8	6K1–83614–01	.BRACKET .SUPPORT	1					
9	98980–05010	.SCREW, BIND .VIS, DE PRESSION	2					
10	92990–05100	.WASHER, SPRING .RONDELLE, GROWER	2					
11	95380–05600	.NUT .ECROU	2					
12	688–83383–11	.BUZZER .RONFLEUR	2					
13	6K1–85830–01	.CONTROL UNIT ASSY .BLOC DE CONTROLE	1					
14	98980–06020	.SCREW, BIND .VIS, DE PRESSION	2					
15	95380–06600	.NUT, HEXAGON .ECROU	2					
16	92990–06100	.WASHER, SPRING .RONDELLE, GROWER	2					
17	92990–06600	.WASHER, PLATE .RONDELLE, PLATE	2					
18	6K1–81980–00	.DIODE ASSY .REDRESSEUR 2	2					
19	90149–05M05	SCREW VIS	4					
20	95380–05600	NUT ECROU	4					
21	92990–05100	WASHER, SPRING RONDELLE, GROWER	4					
22	92990–05600	WASHER, PLATE RONDELLE, PLATE	4					

FIG. 28 SWITCH & PANEL 6 — TABLEAU DE CONTACTEUR 6

TWIN IG SWITCH

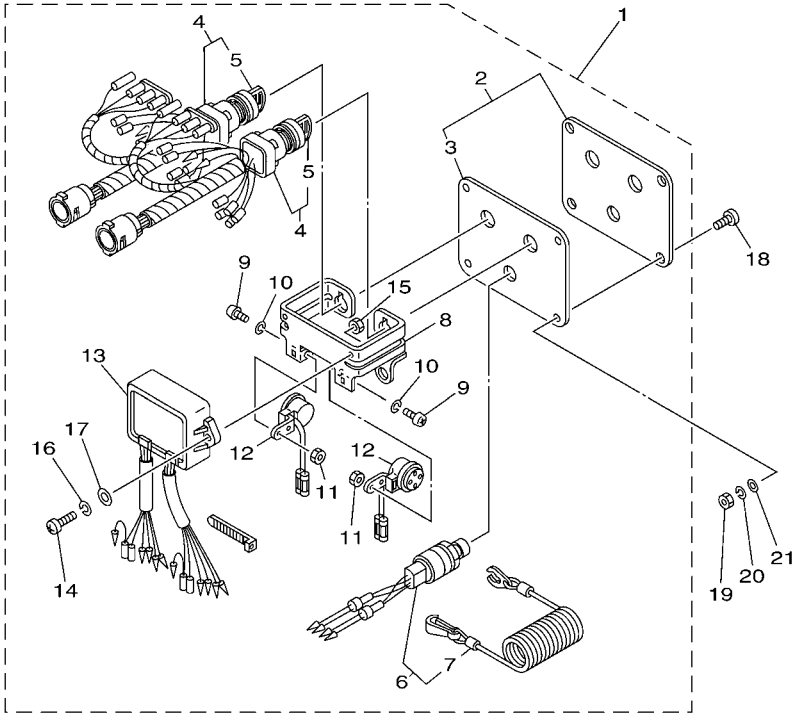

601R10R-H280

REF. NO.	PART NO. N° PIECES	DESCRIPTION DESCRIPTION	602R					REMARKS REMARQUES
1	61B–82570–03	PANEL SWITCH ASSY PLATINE D'INTERRUPEUR CPLT	1					WITHOUT CHOKE SW. WITHOUT CHOKE SW.
2	6K1–82571–02	.PLATE, PANEL SWITCH .TABLEAU, CONTACTEUR	1					
3	61B–82588–01	..PLATE ..PLAQUE	1					
4	61B–82510–01	.MAIN SWITCH ASSY .CONTACTEUR A CLEF COMPLET	2					
5	676–82577–00	..CAP, KEY ..CABOCHON	1					
6	6K1–82575–00	.ENGINE STOP SWITCH ASSY .COUPE CIRCUIT CPLT	1					
7	682–82556–00	..LANYARD, STOP SWITCH ..PLAQUETTE	1					
8	6K1–83614–01	.BRACKET .SUPPORT	1					
9	98980–05010	.SCREW, BIND .VIS, DE PRESSION	2					
10	92990–05100	.WASHER, SPRING .RONDELLE, GROWER	2					
11	95380–05600	.NUT .ECROU	2					
12	6R5–83383–00	.BUZZER .RONFLEUR	2					
13	61B–85830–00	.CONTROL UNIT ASSY .BLOC DE CONTROLE	1					
14	98980–06020	.SCREW, BIND .VIS, DE PRESSION	2					
15	95380–06600	.NUT, HEXAGON .ECROU	2					
16	92990–06100	.WASHER, SPRING .RONDELLE, GROWER	2					
17	92990–06600	.WASHER, PLATE .RONDELLE, PLATE	2					
18	90149–05M05	SCREW VIS	4					
19	95380–05600	NUT ECROU	4					
20	92990–05100	WASHER, SPRING RONDELLE, GROWER	4					
21	92990–05600	WASHER, PLATE RONDELLE, PLATE	4					

FIG. 29 SWITCH & PANEL 7 — TABLEAU DE CONTACTEUR 7

TWIN IG SWITCH
(FOR DIGITAL NETWORK GAUGE)

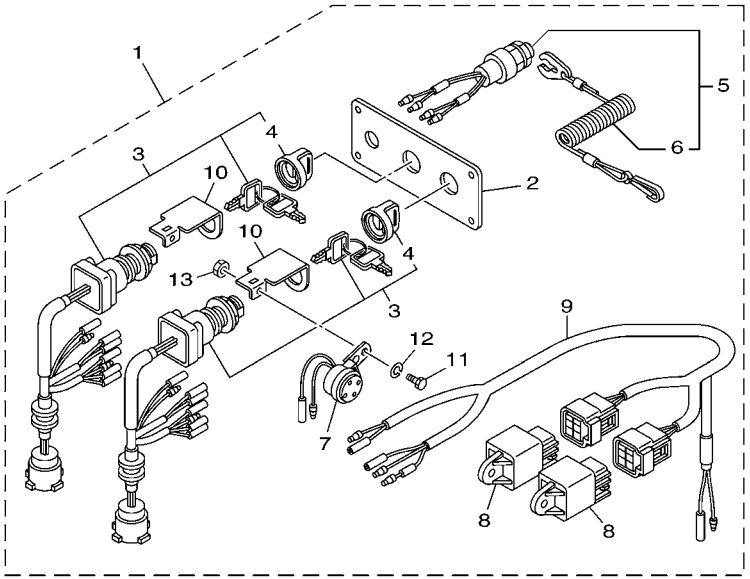

601R10R-H290

REF. NO.	PART NO. N° PIECES	DESCRIPTION DESCRIPTION	602R					REMARKS REMARQUES
1	6Y8–82570–02	PANEL SW., TWIN PLATINE D'INTERRUPEUR CPLT	1					1 & 2 STATION MAIN 1 & 2 STATION MAIN
2	6Y8–82571–01	.PLATE, PANEL SWITCH .TABLEAU, CONTACTEUR	1					
3	6Y8–82510–02	.MAIN SWITCH ASSY .CONTACTEUR A CLEF COMPLET	2					
4	676–82577–00	..CAP, KEY ..CABOCHON	1					
5	6K1–82575–00	.ENGINE STOP SWITCH ASSY .COUPE CIRCUIT CPLT	1					
6	682–82556–00	..LANYARD, STOP SWITCH ..PLAQUETTE	1					
7	6R5–83383–00	.BUZZER .RONFLEUR	2					
8	68V–81950–00	.RELAY ASSY .RELAIS COMPLET	2					
9	6Y8–82507–00	.LEAD, IGNITION SWITCH RELAY .FIL	1					
10	64D–82581–00	.STAY, CORD CLAMP .SUPPORT, COLLIER DE CORDON	2					
11	97303–05012	.BOLT .BOULON	2					
12	92903–05100	.WASHER, SPRING .RONDELLE, GROWER	2					
13	95303–05700	.NUT .ECROU	2					

FIG. 30 SWITCH & PANEL 8 — TABLEAU DE CONTACTEUR 8

TWIN IG SWITCH
(FOR 6X6 DBW REMOTE CONTROL)

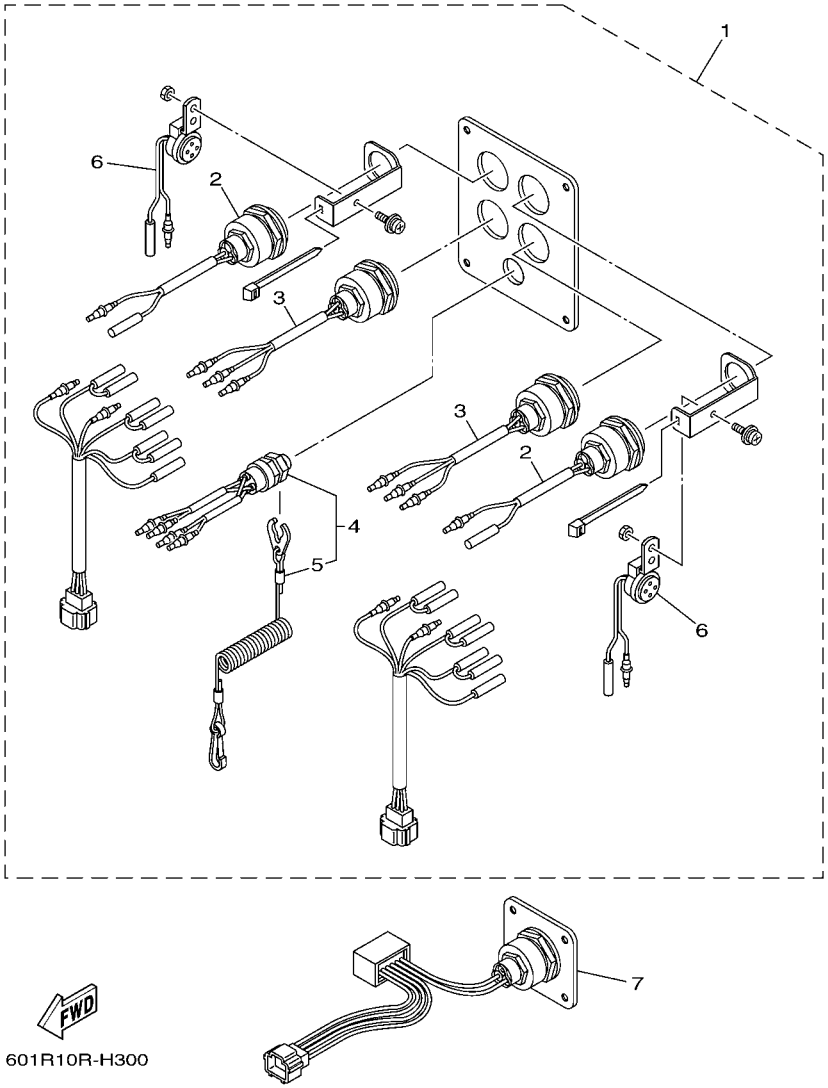

REF. NO.	PART NO. N° PIECES	DESCRIPTION DESCRIPTION	602R					REMARKS REMARQUES
1	6X6–82570–10	PANEL SWITCH ASSY (TWIN) PLATINE D'INTERRUPEUR CPLT	1					2 STATION SUB 2 STATION SUB
2	6X1–81870–00	.STARTING SWITCH ASSY .CONTACT A CLEF	2					
3	6X1–82550–00	.ENGINE STOP SWITCH ASSY .COMMUTATEUR D'ARRET CPLT	2					
4	6K1–82575–00	.ENGINE STOP SWITCH ASSY .COUPE CIRCUIT CPLT	1					
5	682–82556–00	..LANYARD, STOP SWITCH ..PLAQUETTE	1					
6	6R5–83383–00	.BUZZER .RONFLEUR	2					
7	6X6–82570–A0	PANEL SWITCH ASSY PLATINE D'INTERRUPEUR CPLT	2					2 STATION SUB 2 STATION SUB

FIG. 31 SWITCH & PANEL 9 — TABLEAU DE CONTACTEUR 9

TRIPLE IG SWITCH
(FOR DIGITAL NETWORK GAUGE)

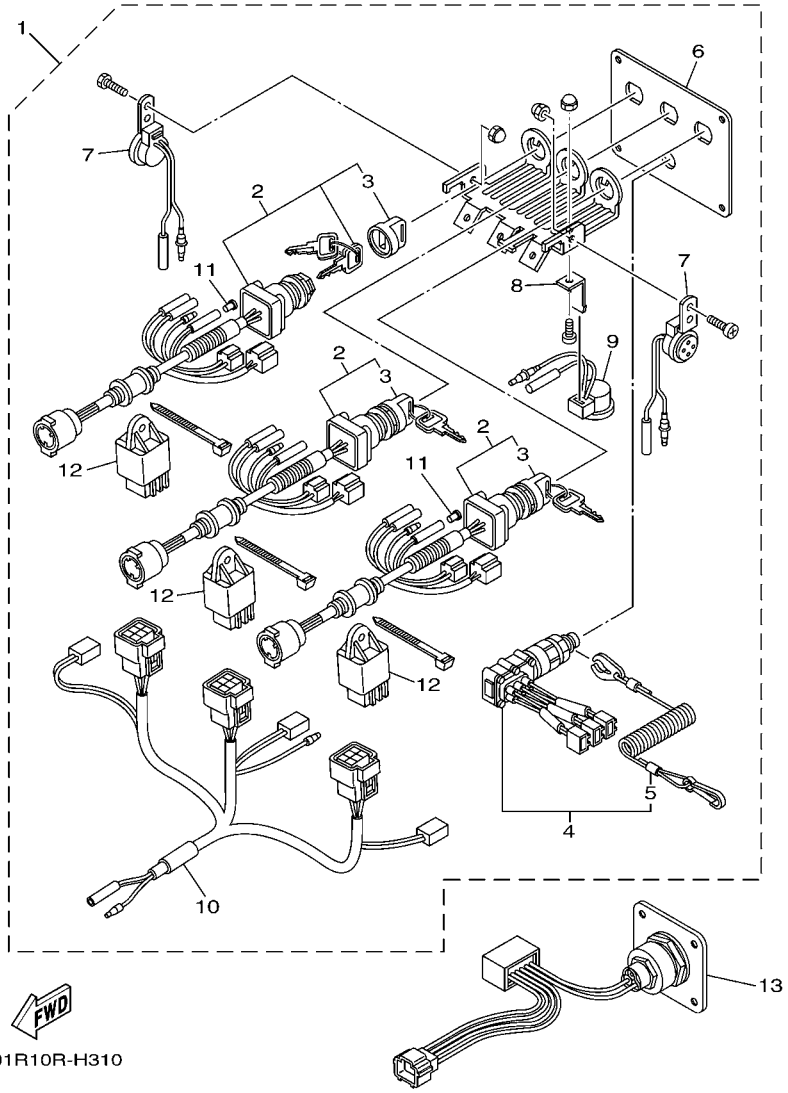

601R10R-H310

REF. NO.	PART NO. N° PIECES	DESCRIPTION DESCRIPTION	602R					REMARKS REMARQUES
1	6X5–82570–01	PANEL SWITCH ASSY PLATINE D'INTERRUPEUR CPLT	1					2 STATION MAIN 2 STATION MAIN
2	6X5–82510–01	.MAIN SWITCH ASSY .CONTACTEUR A CLEF COMPLET	3					
3	676–82577–00	..CAP, KEY ..CABOCHON	1					
4	6X5–82575–00	.ENGINE STOP SWITCH ASSY .COUPE CIRCUIT CPLT	1					
5	682–82556–00	..LANYARD, STOP SWITCH ..PLAQUETTE	1					
6	6X5–82571–00	.PANEL, SWITCH .TABLEAU, CONTACTEUR	1					
7	6X5–83383–00	.BUZZER .RONFLEUR	2					
8	6X5–82581–00	.STAY, CORD CLAMP .SUPPORT, COLLIER DE CORDON	1					
9	6X4–83383–00	.BUZZER .RONFLEUR	1					
10	6X5–82507–00	.WIRE, LEAD .FIL	1					
11	703–82119–00	.COVER, LEAD WIRE .GARNITURE, FIL	5					
12	68V–81950–00	.RELAY ASSY .RELAIS COMPLET	3					
13	6X6–82570–A0	PANEL SWITCH ASSY PLATINE D'INTERRUPEUR CPLT	1					2 STATION MAIN 2 STATION MAIN

FIG. 32 SWITCH & PANEL 10 — TABLEAU DE CONTACTEUR 10

TRIPLE IG SWITCH
(FOR 6X6 DBW REMOTE CONTROL)

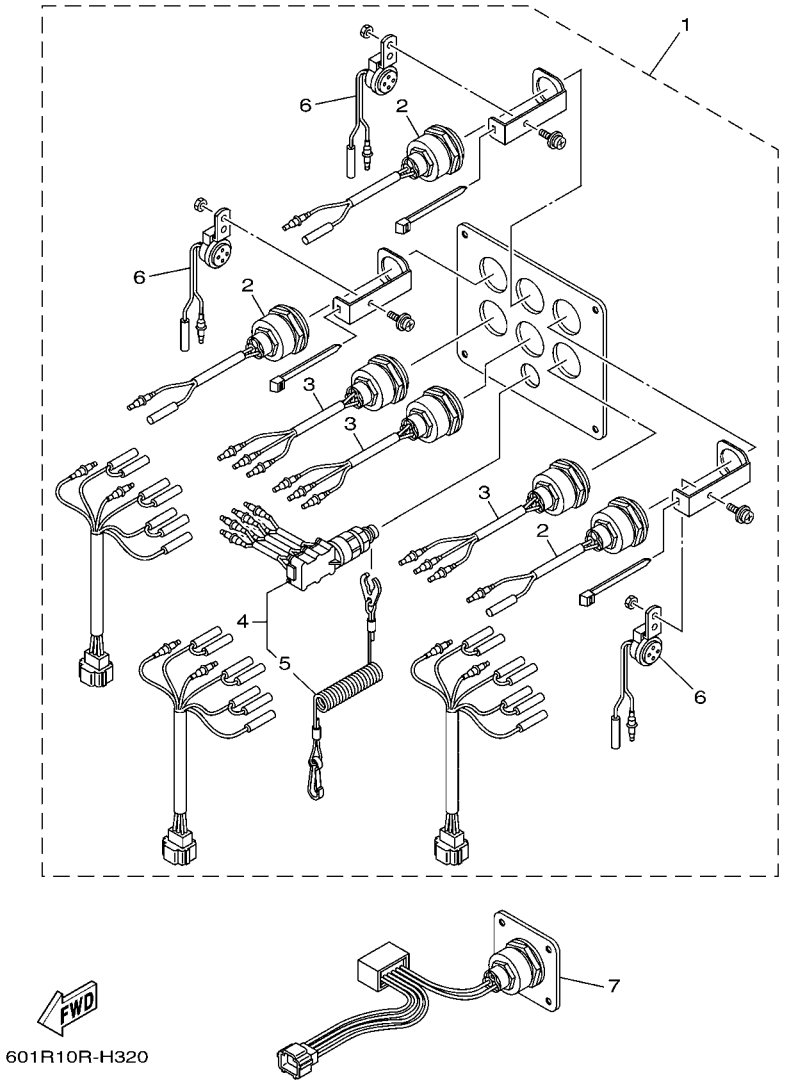

REF. NO.	PART NO. N° PIECES	DESCRIPTION DESCRIPTION	602R					REMARKS REMARQUES
1	6X6–82570–20	PANEL SWITCH ASSY PLATINE D'INTERRUPEUR CPLT	1					2 STATION SUB 2 STATION SUB
2	6X1–81870–00	.STARTING SWITCH ASSY .CONTACT A CLEF	3					
3	6X1–82550–00	.ENGINE STOP SWITCH ASSY .COMMUTATEUR D'ARRET CPLT	3					
4	6X6–82575–00	.ENGINE STOP SWITCH ASSY .COUPE CIRCUIT CPLT	1					
5	682–82556–00	..LANYARD, STOP SWITCH ..PLAQUETTE	1					
6	6R5–83383–00	.BUZZER .RONFLEUR	3					
7	6X6–82570–A0	PANEL SWITCH ASSY PLATINE D'INTERRUPEUR CPLT	2					2 STATION SUB 2 STATION SUB

IG SWITCH W/ PANEL

Part No.	Remarks
64D-82570-03	With bullet connectors for stop switch
64D-82570-20	With 2-pin coupler for stop switch, For 6X3 and 6X7 remote control

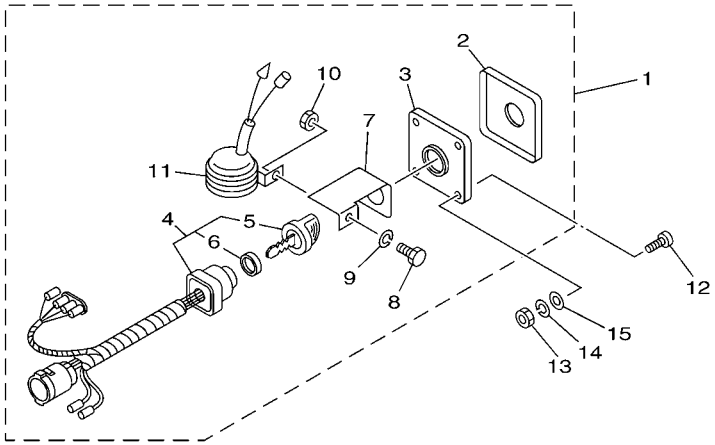

EMERGENCY STOP SWITCH W/ PANEL

Part No.	Remarks
64D-82570-10	With bullet connectors for stop switch
64D-82570-30	With 2-pin coupler for stop switch

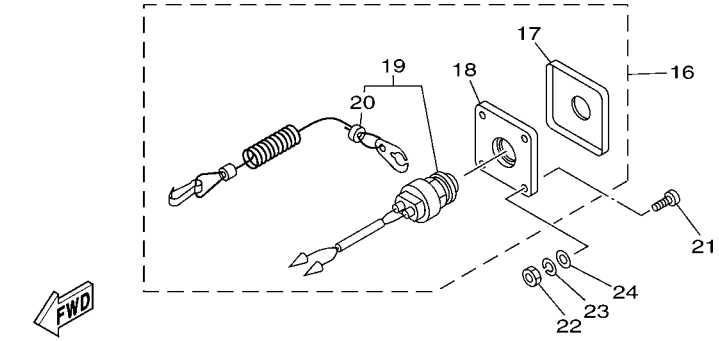

601R10R-H330

FIG. 33 SWITCH & PANEL 11 TABLEAU DE CONTACTEUR 11

REF. NO.	PART NO. N° PIECES	DESCRIPTION DESCRIPTION	602R					REMARKS REMARQUES
1	64D–82570–03	PANEL SWITCH ASSY PLATINE D'INTERRUPEUR CPLT	1					UR UR
	64D–82570–20	PANEL SWITCH ASSY PLATINE D'INTERRUPEUR CPLT	1					UR UR
2	64D–82571–00	.PANEL, SWITCH .TABLEAU, CONTACTEUR	1					
3	64D–82588–00	.PLATE .PLAQUE	1					
4	64D–82510–03	.MAIN SWITCH ASSY .CONTACTEUR A CLEF COMPLET	1					
5	703–82577–00	..CAP, KEY ..CABOCHON	1					
6	6K1–82532–00	..CAP ..COUVERCLE	1					
7	64D–82581–00	.STAY, CORD CLAMP .SUPPORT, COLLIER DE CORDON	1					
8	97303–05012	.BOLT .BOULON	1					
9	92903–05100	.WASHER, SPRING .RONDELLE, GROWER	1					
10	95303–05700	.NUT .ECROU	1					
11	688–83383–11	.BUZZER .RONFLEUR	1					
12	90149–05M05	SCREW VIS	4					
13	95380–05600	NUT ECROU	4					
14	92990–05100	WASHER, SPRING RONDELLE, GROWER	4					
15	92990–05600	WASHER, PLATE RONDELLE, PLATE	4					
16	64D–82570–10	PANEL SWITCH ASSY PLATINE D'INTERRUPEUR CPLT	1					UR UR
	64D–82570–30	PANEL SWITCH ASSY PLATINE D'INTERRUPEUR CPLT	1					UR UR
17	64D–82571–10	.PANEL, SWITCH .TABLEAU, CONTACTEUR	1					
18	64D–82588–10	.PLATE .PLAQUE	1					
19	64D–82575–00	.ENGINE STOP SWITCH ASSY .COUPE CIRCUIT CPLT	1					FOR 64D-82570-10 FOR 64D-82570-10
	64D–82575–10	.ENGINE STOP SWITCH ASSY .COUPE CIRCUIT CPLT	1					FOR 64D-82570-30 FOR 64D-82570-30
20	682–82556–00	..LANYARD, STOP SWITCH ..PLAQUETTE	1					
21	90149–05M05	SCREW VIS	4					
22	95380–05600	NUT ECROU	4					
23	92990–05100	WASHER, SPRING RONDELLE, GROWER	4					
24	92990–05600	WASHER, PLATE RONDELLE, PLATE	4					

IG SWITCH W/O PANEL

Ref. No.	Part No.	Remarks
1	704-82510-07	With bullet connectors for stop switch
4	6X3-8257B-00	With 2-pin coupler for stop switch, For 6X3 and 6X7 remote control

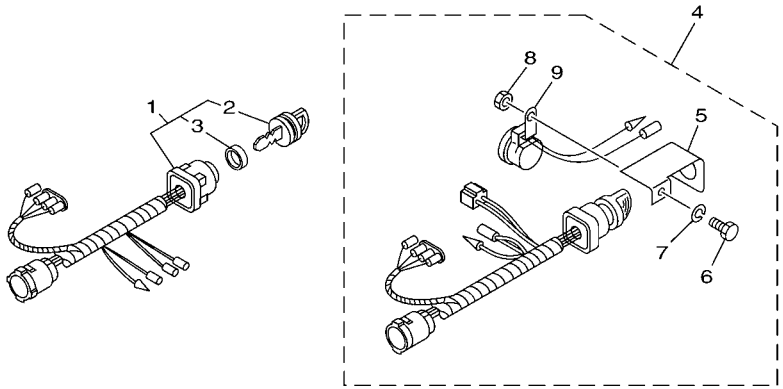

EMERGENCY STOP SWITCH W/O PANEL

Ref. No.	Part No.	Remarks
10	688-82575-01	With bullet connectors for stop switch
12	64D-82575-10	With 2-pin coupler for stop switch

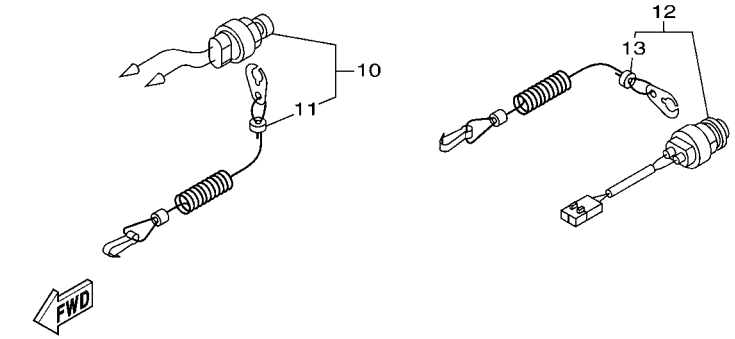

601R10R-H340

FIG. 34 SWITCH & PANEL 12 — TABLEAU DE CONTACTEUR 12

REF. NO.	PART NO. N° PIECES	DESCRIPTION DESCRIPTION	602R					REMARKS REMARQUES
1	704–82510–07	MAIN SWITCH ASSY CONTACTEUR A CLEF COMPLET	1					
2	703–82577–00	.CAP, KEY .CABOCHON	1					
3	6K1–82532–00	.CAP .COUVERCLE	1					
4	6X3–8257B–00	PANEL SWITCH COMP. PLATINE D'INTERRUPEUR CPLT	1					
5	64D–82581–00	.STAY, CORD CLAMP .SUPPORT, COLLIER DE CORDON	1					
6	97303–05012	.BOLT .BOULON	1					
7	92903–05100	.WASHER, SPRING .RONDELLE, GROWER	1					
8	95303–05700	.NUT .ECROU	1					
9	6R5–83383–00	.BUZZER .RONFLEUR	1					
10	688–82575–01	ENGINE STOP SWITCH ASSY COUPE CIRCUIT CPLT	1					
11	682–82556–00	.LANYARD, STOP SWITCH .PLAQUETTE	1					
12	64D–82575–10	ENGINE STOP SWITCH ASSY COUPE CIRCUIT CPLT	1					
13	682–82556–00	.LANYARD, STOP SWITCH .PLAQUETTE	1					

FIG. 35 SWITCH & PANEL 13 — TABLEAU DE CONTACTEUR 13

ADAPTER FOR EMERGENCY STOP SWITCH LEAD

ENGINE SHUT-OFF LANYARD (CORD)

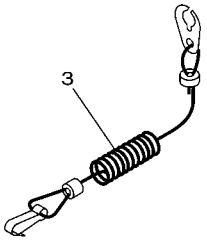

PT/T SWITCH PANEL
(FOR PTT MODELS)

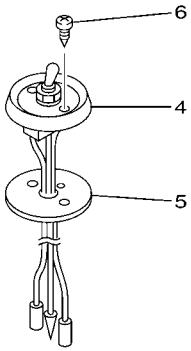

6011100-G330

REF. NO.	PART NO. N° PIECES	DESCRIPTION DESCRIPTION	602R					REMARKS REMARQUES
1	6X3–81971–00	WIRE, LEAD FIL	1					
2	6X3–81971–10	WIRE, LEAD FIL	1					
3	682–82556–00	LANYARD, STOP SWITCH PLAQUETTE	1					
4	688–82563–10	TRIM & TILT SWITCH ASSY INCLINER ET PARER COMMUTATEUR	1					
5	688–82388–00	PLATE PLAQUETTE	1					
6	97780–40116	SCREW, TAPPING VIS, TETE BOMBEE	2					

SWITCH PANEL HARNESS

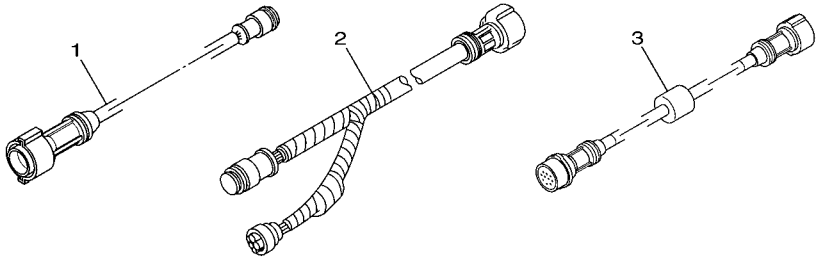

7-PIN MAIN HARNESS (Without PTT) | 10-PIN MAIN HARNESS | 7 TO 10-PIN ADAPTER

WIRE HARNESS

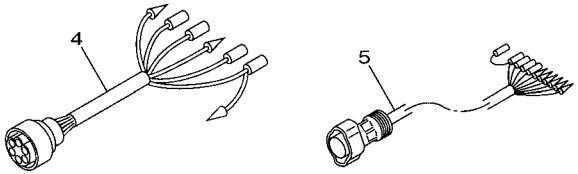

SUB WIRE LEAD (For 10-pin remote control main harness)

SUB WIRE LEAD (For 10-pin main harness of 703 remote control)

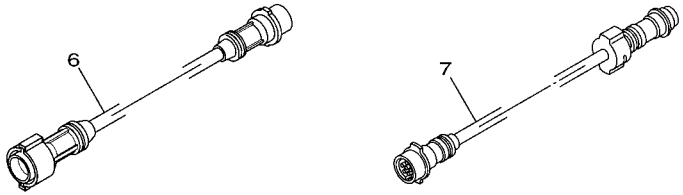

7-PIN EXTENSION HARNESS

10-PIN EXTENSION HARNESS

6011100-G340

FIG. 36 WIRE HARNESS 1 FAISCEAU DE FILS 1

REF. NO.	PART NO. N° PIECES	DESCRIPTION DESCRIPTION	602R					REMARKS REMARQUES
1	688–82586–50	EXTENSION, WIRE HARNESS (5M) EXTENSION, FAISCEAU DE FILS (5	1					(7P) (7P)
2	688–8258A–50	EXTENSION, WIRE HARNESS (5M) EXTENSION, FAISCEAU DE FILS (5	1					UR (10P) UR (10P)
	688–8258A–60	EXTENSION, WIRE HARNESS (6M) EXTENSION, FAISCEAU DE FILS (6	1					UR (10P) UR (10P)
	61B–8258A–01	EXTENSION, WIRE HARNESS (9.5M) EXTENSION, FAISCEAU DE FILS(9.	1					UR (10P) UR (10P)
	6K1–8258A–40	EXTENSION, WIRE HARNESS (8M) EXTENSION, FAISCEAU DE FILS(8M	1					UR (10P) UR (10P)
3	703–8258A–00	EXTENSION, WIRE HARNESS (0.5M) EXTENSION, FAISCEAU DE FILS (0	1					7P TO 10P ADAPTER 7P TO 10P ADAPTER
4	704–85721–00	WIRE, LEAD FIL, SECONDAIRE	1					
5	688–8258A–20	EXTENSION, WIRE HARNESS (4.9M) EXTENSION, FAISCEAU DE FILS (4	1					(10P) (10P)
6	688–82586–11	EXTENSION, WIRE HARNESS (2.0M) EXTENSION, FAISCEAU DE FILS (2	1					UR L:2M(7P) UR L:2M(7P)
	688–82586–31	EXTENSION, WIRE HARNESS (3.0M) EXTENSION, FAISCEAU DE FILS (3	1					UR L:3M(7P) UR L:3M(7P)
7	688–8258A–10	EXTENSION, WIRE HARNESS (2M) EXTENSION, FAISCEAU DE FILS (2	1					UR (10P) UR (10P)
	688–8258A–30	EXTENSION, WIRE HARNESS (3M) EXTENSION, FAISCEAU DE FILS (3	1					UR (10P) UR (10P)

FIG. 37 WIRE HARNESS 2 FAISCEAU DE FILS 2

DIGITAL ELECTRONIC CONTROL WIRE HARNESS

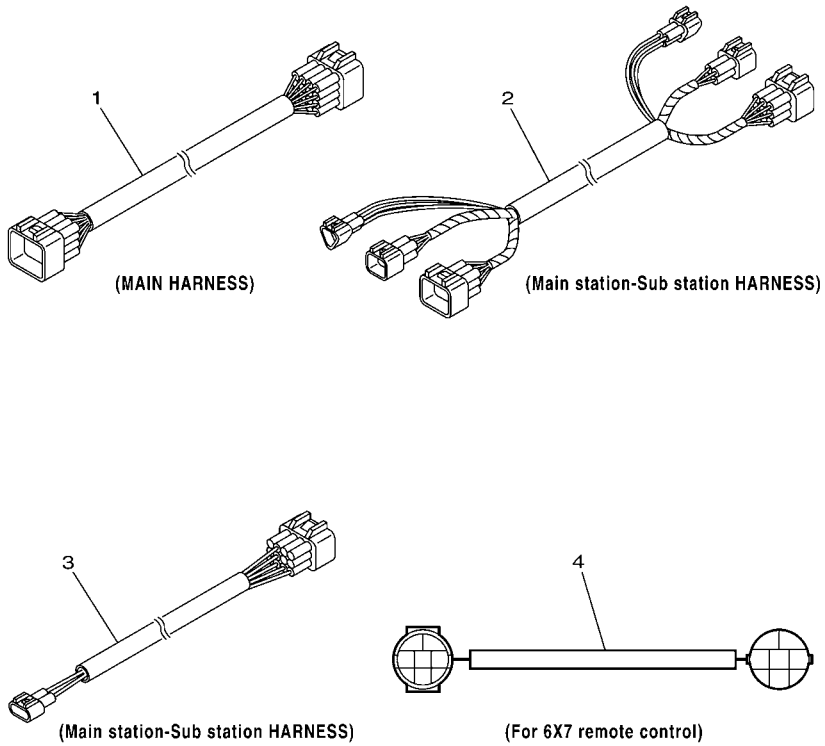

601R10R-H370

REF. NO.	PART NO. N° PIECES	DESCRIPTION DESCRIPTION	602R					REMARKS REMARQUES
1	6X6–8258A–00	EXTENSION, WIRE HARNESS (6.1M) EXTENSION, FIL FAISCEAU (6.1M)	1					UR UR
	6X6–8258A–10	EXTENSION, WIRE HARNESS (7M) EXTENSION, FIL FAISCEAU (7M)	1					UR UR
	6X6–8258A–20	EXTENSION, WIRE HARNESS (8M) EXTENSION, FIL FAISCEAU (8M)	1					UR UR
	6X6–8258A–30	EXTENSION, WIRE HARNESS (10M) EXTENSION, FIL FAISCEAU (10M)	1					UR UR
	6X6–8258A–40	EXTENSION, WIRE HARNESS (12M) EXTENSION, FIL FAISCEAU (12M)	1					UR UR
2	6X6–8258A–A0	EXTENSION, WIRE HARNESS (5M) EXTENSION, FIL FAISCEAU (5M)	1					UR 2 STATION UR 2 STATION
	6X6–8258A–C0	EXTENSION, WIRE HARNESS (8M) EXTENSION, FIL FAISCEAU (8M)	1					UR 2 STATION UR 2 STATION
	6X6–8258A–E0	EXTENSION, WIRE HARNESS (12.2M) EXTENSION, FIL FAISCEAU (12.2M)	1					UR 2 STATION UR 2 STATION
3	6X6–8258A–B0	EXTENSION, WIRE HARNESS (5M) EXTENSION, FIL FAISCEAU (5M)	1					UR 2 STATION UR 2 STATION
	6X6–8258A–D0	EXTENSION, WIRE HARNESS (8M) EXTENSION, FIL FAISCEAU (8M)	1					UR 2 STATION UR 2 STATION
	6X6–8258A–F0	EXTENSION, WIRE HARNESS (12.2M) EXTENSION, FIL FAISCEAU (12.2M)	1					UR 2 STATION UR 2 STATION
4	6X7–82590–30	WIRE HARNESS ASSY FAISCEAU DE FILS COMPLET	1					FOR 6X7 RC FOR 6X7 RC

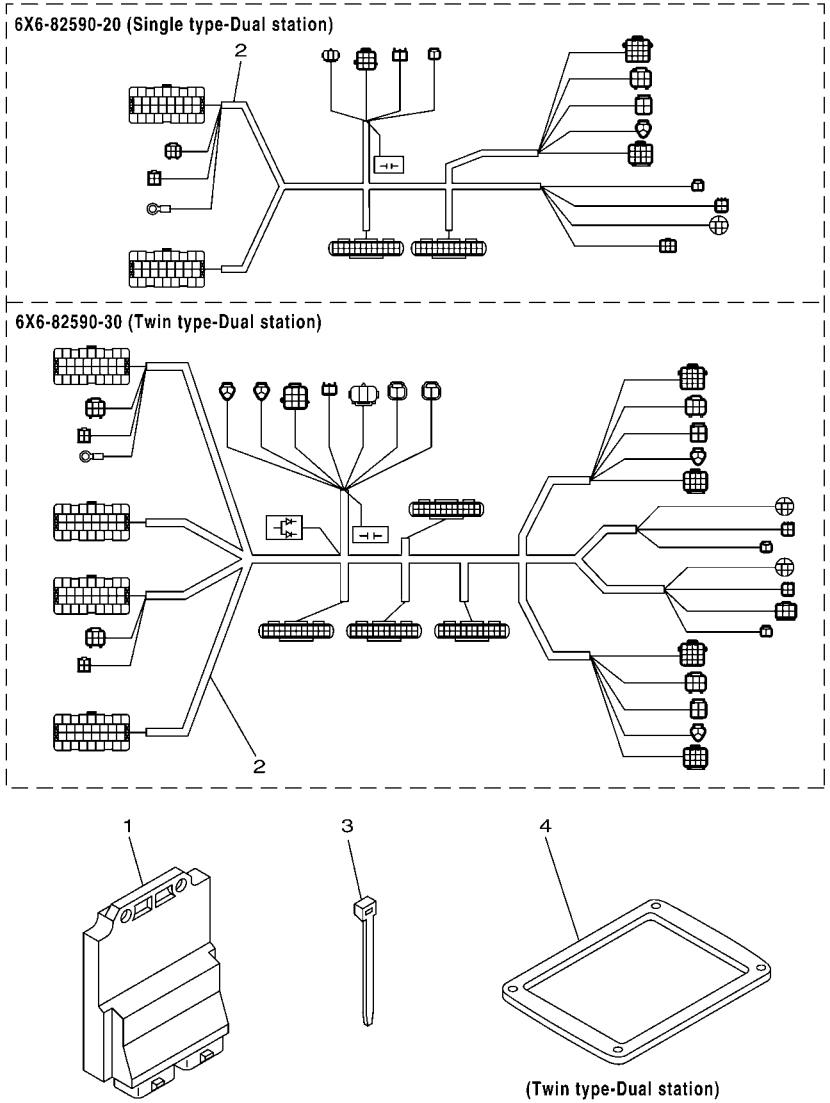

FIG. 38 ELECTRICAL DBW REMOTE CONTROL BOITIER COMMANDE

REF. NO.	PART NO. N° PIECES	DESCRIPTION DESCRIPTION	602R					REMARKS REMARQUES
1	6X6–85590–00	CONTROL UNIT ASSY BLOC DE CONTROLE	1					SINGLE, 2 STATION SINGLE, 2 STATION
	6X6–85590–00	CONTROL UNIT ASSY BLOC DE CONTROLE	2					TWIN, 2 STATION TWIN, 2 STATION
2	6X6–82590–20	WIRE HARNESS ASSY FAISCEAU DE FILS COMPLET	1					SINGLE, 2 STATION SINGLE, 2 STATION
	6X6–82590–30	WIRE HARNESS ASSY FAISCEAU DE FILS COMPLET	1					TWIN, 2 STATION TWIN, 2 STATION
3	703–82591–00	BAND COLLIER	4					SINGLE, 2 STATION SINGLE, 2 STATION
	703–82591–00	BAND COLLIER	8					TWIN, 2 STATION TWIN, 2 STATION
4	6X6–48176–10	GROMMET PASSE-FIL	1					TWIN, 2 STATION TWIN, 2 STATION

Part No.	Applicable model	Remarks
655-48501-02	E8D/EK8D	Rope type
655-48501-10	E8D/EK8D	Ball post type

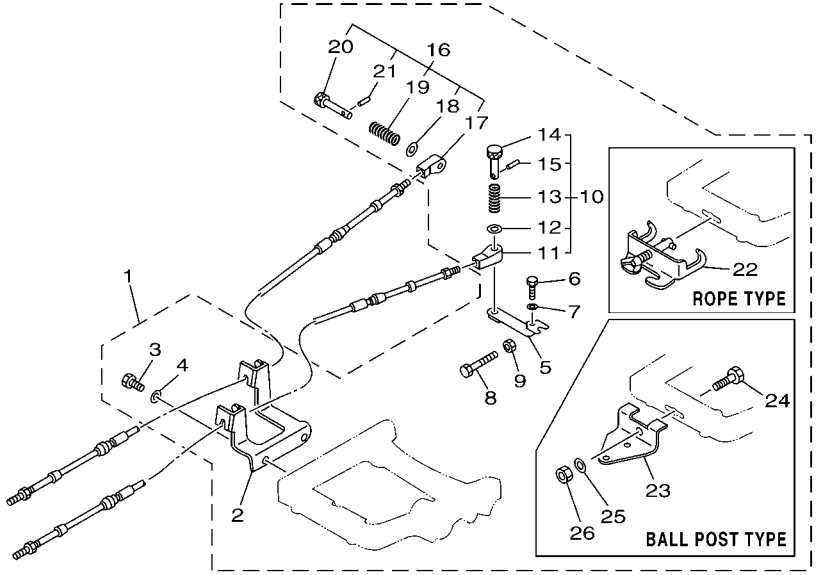

6011100-G370

FIG. 39 REMO CON ATTACHMENT 1 COMMANDE A DISTANCE 1

REF. NO.	PART NO. N° PIECES	DESCRIPTION DESCRIPTION	602R					REMARKS REMARQUES
1	655–48501–02	REMOTE CONT. ATTACHMENT ASSY. COMMANDE A DISTANCE (KIT)	1					UR ROPE TYPE UR ROPE TYPE
	655–48501–10	REMOTE CONT. ATTACHMENT ASSY. COMMANDE A DISTANCE (KIT)	1					UR BALL POST TYPE UR BALL POST TYPE
2	655–48531–51	.BRACKET, REMOTE CONTROL 1 .ETRIER 1, COMMANDE A DISTANCE	1					
3	97095–06018	.BOLT .BOULON	2					
4	92995–06600	.WASHER .RONDELLE	2					
5	647–48534–50	.THROTTLE LEVER, CONTROL .LEVIER D'ACCELERATION	1					
6	97095–05020	.BOLT .BOULON	1					
7	92995–05600	.WASHER .RONDELLE	1					
8	97090–06045	.BOLT .BOULON	1					
9	95380–06600	.NUT, HEXAGON .ECROU	1					
10	647–48330–50	.CABLE END ASSY .RACCORD DE CABLE	1					
11	617–48346–90	..CABLE END, REMOTE CONTROL ..CHAPE CABLE	1					
12	92990–08600	..WASHER, PLATE ..RONDELLE, PLATE	1					
13	90501–10071	..SPRING, COMPRESSION ..RESSORT, COMPRESSION	1					
14	617–48331–91	..HOOK, CABLE ..CROCHET, CABLE	1					
15	91690–30012	..PIN, SPRING ..AGRAFFE	1					
16	647–48340–50	.CABLE END ASSY .CHAPE CABLE	1					
17	647–48346–50	..CABLE END, REMOTE CONTROL ..CHAPE CABLE	1					
18	92990–08600	..WASHER, PLATE ..RONDELLE, PLATE	1					
19	90501–10264	..SPRING, COMPRESSION ..RESSORT, COMPRESSION	1					
20	617–48361–91	..HOOK, CABLE ..CROCHET, CABLE	1					
21	91690–30012	..PIN, SPRING ..AGRAFFE	1					
22	700–48510–12	.STEERING HOOK ASSY .ATTACHE DE DIRECTION (ENS.)	1					UR ROPE TYPE UR ROPE TYPE
23	676–48511–10	.HOOK, STEERING .ATTACHE, DIRECTION	1					UR BALL POST TYPE UR BALL POST TYPE
24	97075–10040	.BOLT .BOULON	1					
25	92990–10600	.WASHER, PLATE .RONDELLE, PLATE	1					
26	90185–10051	.NUT, SELF-LOCKING .ECROU,AUTO-BLOQUANT	1					

FIG. 40 REMO CON ATTACHMENT 2 COMMANDE A DISTANCE 2

Part No.	Applicable model
63V-48501-00	9.9F (9.9), 15F (15)

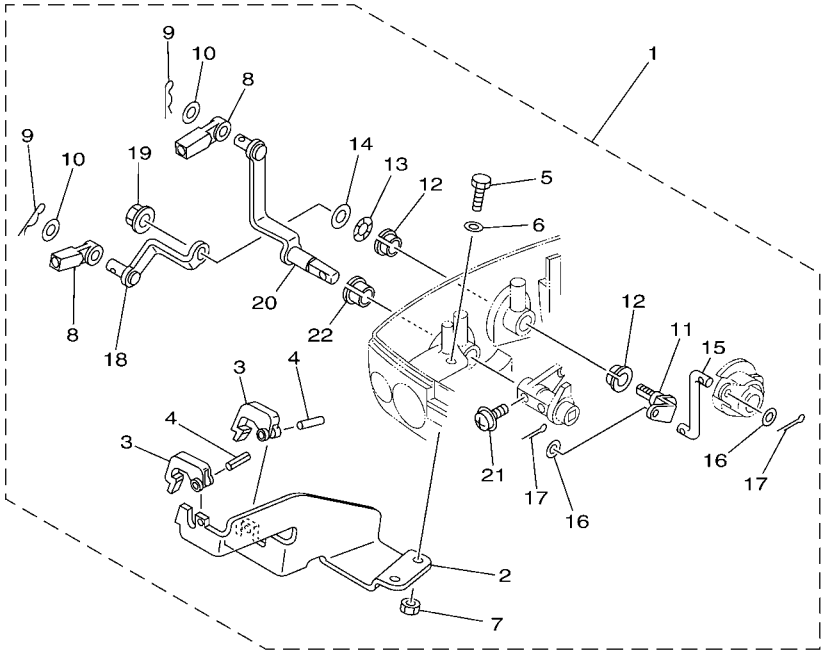

6011100-G380

REF. NO.	PART NO. N° PIECES	DESCRIPTION DESCRIPTION	602R					REMARKS REMARQUES
1	63V–48501–00	REMOTE CONT. ATTACHMENT ASSY. COMMANDE A DISTANCE (KIT)	1					
2	63V–48531–00	.BRACKET, REMOTE CONTROL 1 .ETRIER 1, COMMANDE A DISTANCE	1					
3	682–48538–50	.CLAMP, CABLE 1 .COLLIER	2					
4	91690–30012	.PIN, SPRING .AGRAFFE	2					
5	97095–06016	.BOLT .BOULON	2					
6	92995–06600	.WASHER .RONDELLE	2					
7	95380–06600	.NUT, HEXAGON .ECROU	2					
8	663–48344–00	.CABLE END, REMOTE CONTROL .CHAPE CABLE	2					
9	90468–18008	.CLIP .JONC	2					
10	90201–08M12	.WASHER, PLATE .RONDELLE, PLATE	2					
11	63V–42154–00	.LEVER, THROTTLE CONTROL .LEVIER DE COMMANDE D'AVANCE	1					
12	90386–10025	.BUSH .DOUILLE	2					
13	90206–10M04	.WASHER, WAVE .RONDELLE, ONDULEE	1					
14	90201–10M02	.WASHER, PLATE .RONDELLE, PLATE	1					
15	63V–42192–00	.ROD 2 .TRINGLE 2	1					
16	90201–04M06	.WASHER, PLATE .RONDELLE, PLATE	2					
17	91490–20010	.PIN. COTTER .GOUPILLE	2					
18	63V–48534–00	.THROTTLE LEVER, CONTROL .LEVIER D'ACCELERATION	1					
19	95780–08300	.NUT, FLANGE .ECROU	1					
20	63V–48544–00	.LEVER, SHIFTCONTROL .POIGNEE, INVERSION	1					
21	90159–05M25	.SCREW, WITH WASHER .VIS, AVEC RONDELLE	1					
22	90386–10009	.BUSH .DOUILLE	1					

Part No.	Applicable model
6L2-48501-11	20D (20), 25N (25)

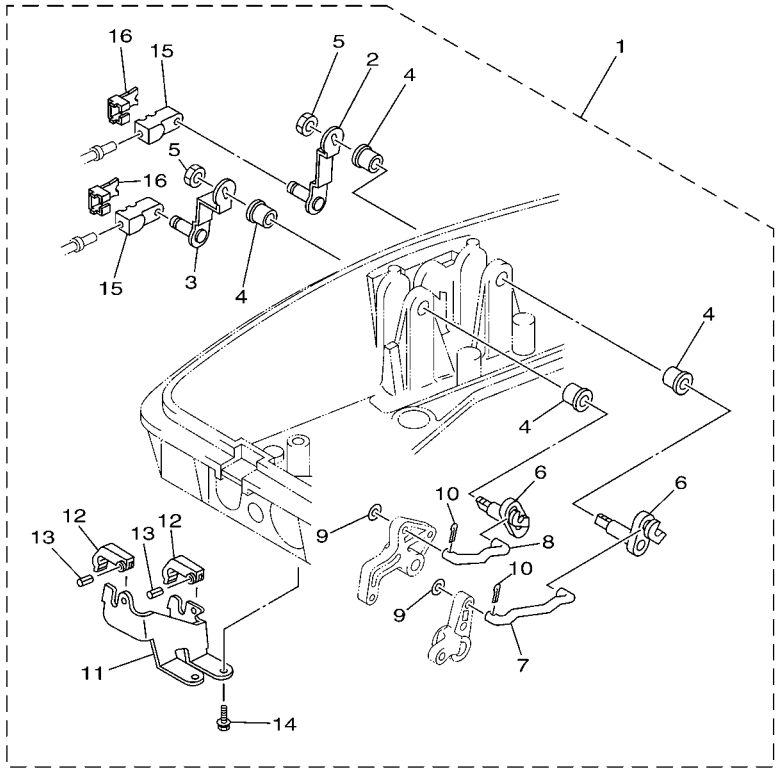

6011100-G390

FIG. 41 REMO CON ATTACHMENT 3 COMMANDE A DISTANCE 3

REF. NO.	PART NO. N° PIECES	DESCRIPTION DESCRIPTION	602R					REMARKS REMARQUES
1	6L2–48501–11	REMOTE CONT. ATTACHMENT ASSY. COMMANDE A DISTANCE (KIT)	1					
2	6L2–48544–01	.LEVER, SHIFTCONTROL .POIGNEE, INVERSION	1					
3	6L2–48534–01	.THROTTLE LEVER, CONTROL .LEVIER D'ACCELERATION	1					
4	90386–10009	.BUSH .DOUILLE	4					
5	95780–08300	.NUT, FLANGE .ECROU	4					
6	6L2–42154–01	.LEVER, THROTTLE CONTROL .LEVIER DE COMMANDE D'AVANCE	2					
7	6L2–42191–01	.ROD 1 .TRINGLE 2	1					
8	6L2–42192–20	.ROD 2 .TRINGLE 2	1					
9	90202–05088	.WASHER, PLATE .RONDELLE, PLATE	2					
10	91490–20010	.PIN. COTTER .GOUPILLE	2					
11	6L2–48531–00	.BRACKET, REMOTE CONTROL 1 .ETRIER 1, COMMANDE A DISTANCE	1					
12	682–48538–50	.CLAMP, CABLE 1 .COLLIER	2					
13	91690–30012	.PIN, SPRING .AGRAFFE	2					
14	90105–06M23	.BOLT FLANGE .BOULON	2					
15	6G8–26363–00	.END, WIRE 1 .EMBOUT DE CABLE	2					
16	6G8–26364–00	.END, CABLE .EMBOUT, DE CABLE	2					

Part No.	Applicable model	Remarks
689-48501-01-4D	25B, 25X, 30H	Rope type
689-48501-21-4D	E25B, E30H	Ball post/ Steering guide type

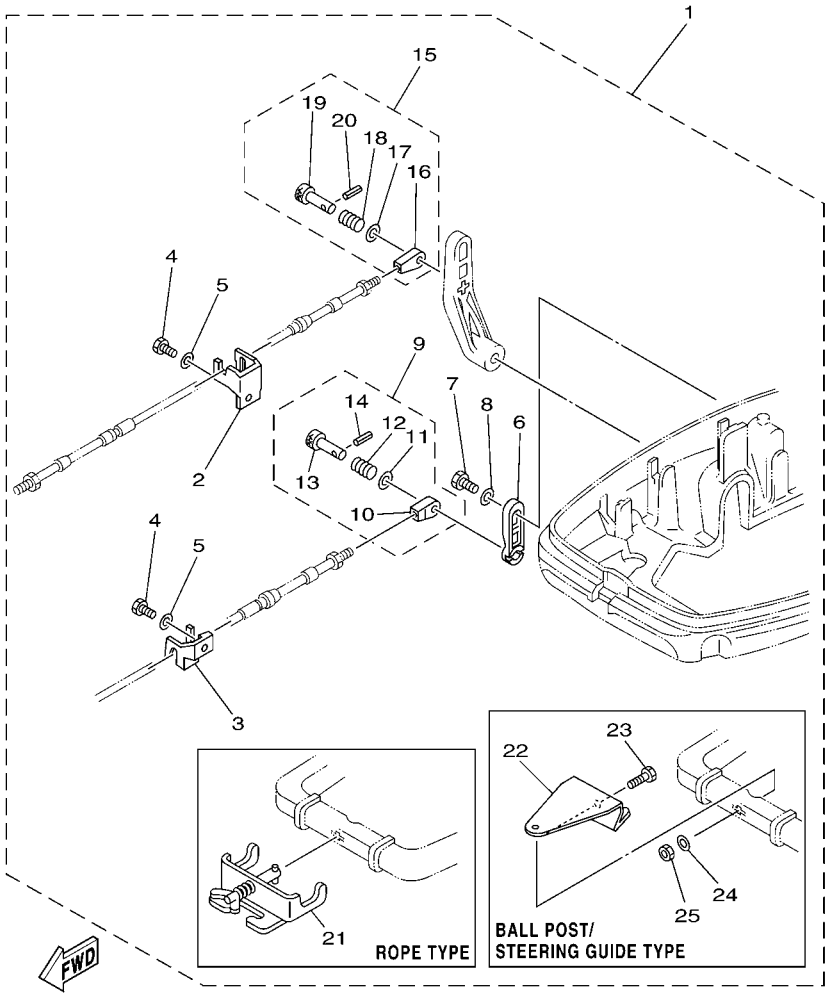

6011100-G400

FIG. 42 REMO CON ATTACHMENT 4 COMMANDE A DISTANCE 4

REF. NO.	PART NO. N° PIECES	DESCRIPTION DESCRIPTION	602R					REMARKS REMARQUES
1	689–48501–01–4D	REMOTE CONT. ATTACHMENT ASSY. COMMANDE A DISTANCE (KIT)	1					UR ROPE TYPE UR ROPE TYPE
	689–48501–21–4D	REMOTE CONT. ATTACHMENT ASSY. COMMANDE A DISTANCE (KIT)	1					UR UR
2	689–48531–50	.BRACKET, REMOTE CONTROL 1 .ETRIER 1, COMMANDE A DISTANCE	1					
3	689–48532–50	.BRACKET, REMOTE CONTROL 2 .ETRIER 2, COMMANDE A DISTANCE	1					
4	97095–06016	.BOLT .BOULON	2					
5	92995–06600	.WASHER .RONDELLE	2					
6	648–48534–50–4D	.THROTTLE LEVER, CONTROL .LEVIER D'ACCELERATION	1					
7	97095–06012	.BOLT .BOULON	1					
8	92995–06600	.WASHER .RONDELLE	1					
9	648–48340–50	.CABLE END ASSY .CHAPE CABLE	1					
10	617–48346–90	..CABLE END, REMOTE CONTROL ..CHAPE CABLE	1					
11	92990–08600	..WASHER, PLATE ..RONDELLE, PLATE	1					
12	90501–10264	..SPRING, COMPRESSION ..RESSORT, COMPRESSION	1					
13	617–48361–91	..HOOK, CABLE ..CROCHET, CABLE	1					
14	91690–30012	..PIN, SPRING ..AGRAFFE	1					
15	648–48330–50	.CABLE END ASSY .RACCORD DE CABLE	1					
16	648–48346–50	..CABLE END, REMOTE CONTROL ..CHAPE CABLE	1					
17	92990–08600	..WASHER, PLATE ..RONDELLE, PLATE	1					
18	90501–10071	..SPRING, COMPRESSION ..RESSORT, COMPRESSION	1					
19	617–48331–91	..HOOK, CABLE ..CROCHET, CABLE	1					
20	91690–30012	..PIN, SPRING ..AGRAFFE	1					
21	700–48510–12	.STEERING HOOK ASSY .ATTACHE DE DIRECTION (ENS.)	1					ROPE TYPE ROPE TYPE
22	689–48511–01	.HOOK, STEERING .ATTACHE, DIRECTION	1					
23	97075–10040	.BOLT .BOULON	1					
24	92990–10600	.WASHER, PLATE .RONDELLE, PLATE	1					
25	90185–10051	.NUT, SELF-LOCKING .ECROU,AUTO-BLOQUANT	1					

Part No.	Applicable model
6J8-48501-03-4D	30D
6J8-48501-11	30D

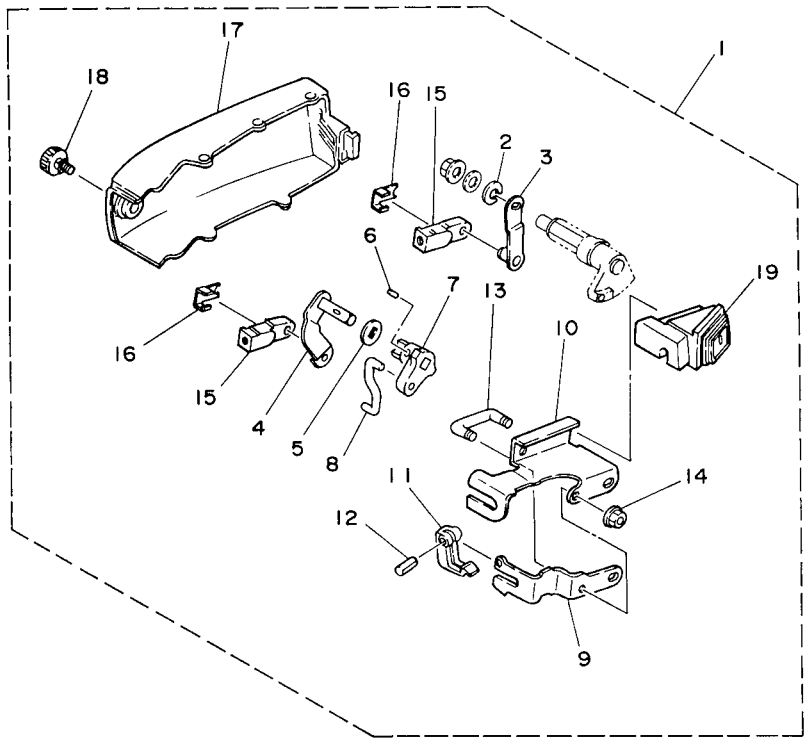

6011100-G410

FIG. 43 REMO CON ATTACHMENT 5 COMMANDE A DISTANCE 5

REF. NO.	PART NO. N° PIECES	DESCRIPTION DESCRIPTION	602R					REMARKS REMARQUES
1	6J8–48501–03–4D	REMOTE CONT. ATTACHMENT ASSY. COMMANDE A DISTANCE (KIT)	1					UR UR
	6J8–48501–11	REMOTE CONT. ATTACHMENT ASSY. COMMANDE A DISTANCE (KIT)	1					UR UR
2	92990–08100	.WASHER, SPRING .RONDELLE, GROWER	1					
3	6J8–48534–00	.THROTTLE LEVER, CONTROL .LEVIER D'ACCELERATION	1					
4	6J8–48544–01	.LEVER, SHIFTCONTROL .POIGNEE, INVERSION	1					
5	6J8–44177–00	.WASHER .RONDELLE	1					
6	90254–03M03	.PIN, SPRING .RIVET, TETE TRONCONIQUE	1					
7	6J8–44173–02	.LEVER, SHIFT CONTROL .POIGNEE, INVERSION	1					
8	6J8–42169–01	.JOINT .AXE	1					
9	6J8–48531–00	.BRACKET, REMOTE CONTROL 1 .ETRIER 1, COMMANDE A DISTANCE	1					
10	6J8–48532–00	.BRACKET, REMOTE CONTROL 2 .ETRIER 2, COMMANDE A DISTANCE	1					
11	682–48538–50	.CLAMP, CABLE 1 .COLLIER	1					
12	91690–30012	.PIN, SPRING .AGRAFFE	1					
13	90109–06M29	.BOLT .BOULON	1					
14	90179–06M24	.NUT .ECROU	2					
15	6G8–26363–00	.END, WIRE 1 .EMBOUT DE CABLE	2					
16	6G8–26364–00	.END, CABLE .EMBOUT, DE CABLE	2					
17	6J8–42723–51	.COVER, BOTTOM .COUVERCLE	1					
18	6J8–42846–00	.SCREW .VIS	1					
19	6J8–42724–10	.GROMMET .PASSE-FIL	1					

Part No.	Applicable model
66T-48501-01	40X, E40X

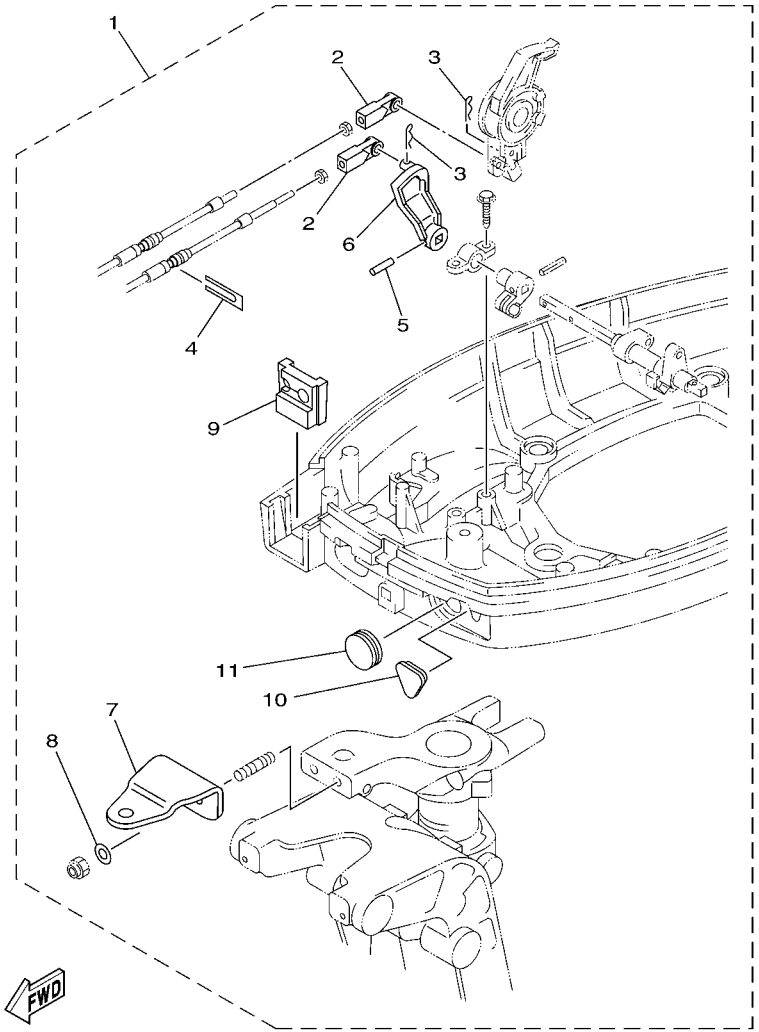

6011100-G420

FIG. 44 REMO CON ATTACHMENT 6 COMMANDE A DISTANCE 6

REF. NO.	PART NO. N° PIECES	DESCRIPTION DESCRIPTION	602R					REMARKS REMARQUES
1	66T–48501–01	REMOTE CONT. ATTACHMENT ASSY. COMMANDE A DISTANCE (KIT)	1					
2	663–48344–00	.CABLE END, REMOTE CONTROL .CHAPE CABLE	2					
3	90468–18008	.CLIP .JONC	2					
4	6H3–48538–00	.CLAMP, CABLE 1 .COLLIER	1					
5	90254–03M04	.PIN, SPRING .RIVET, TETE TRONCONIQUE	1					
6	66T–44125–01	.LEVER, SHIFT ROD .LEVIER, TIGE D'INVERSION	1					
7	65W–48511–00	.HOOK, STEERING .ATTACHE, DIRECTION	1					
8	90201–10120	.WASHER, PLATE .RONDELLE, PLATE	2					
9	66T–42725–30	.GROMMET .PASSE-FIL	1					
10	65W–26326–10	.GROMMET .RONDELLE CAOUTCHOUC	1					
11	65W–42726–10	.GROMMET .PASSE-FIL	1					

Part No.	Applicable model
60R-G8501-00	F6A (F6), F8C (F8), FT8D (T8)
6AU-48501-00	F9.9F (F9.9), FT9.9G (T9.9)

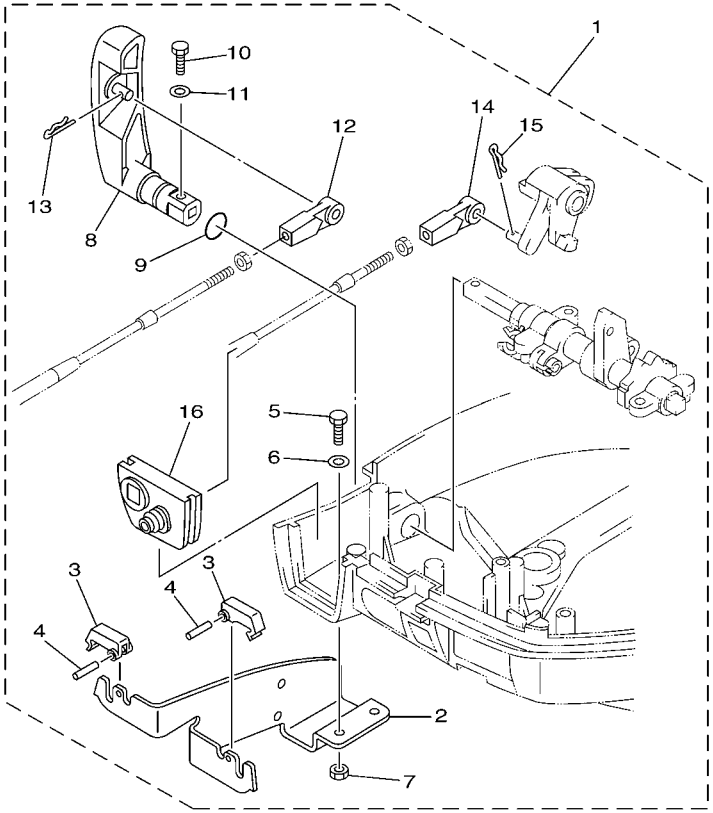

6011100-G430

FIG. 45 REMO CON ATTACHMENT 7 COMMANDE A DISTANCE 7

REF. NO.	PART NO. N° PIECES	DESCRIPTION DESCRIPTION	602R					REMARKS REMARQUES
1	60R–G8501–00	REMOTE CONT. ATTACHMENT ASSY. COMMANDE A DISTANCE (KIT)	1					UR UR
	6AU–48501–00	REMOTE CONT. ATTACHMENT ASSY. COMMANDE A DISTANCE (KIT)	1					UR UR
2	68T–48531–00	.BRACKET, REMOTE CONTROL 1 .ETRIER 1, COMMANDE A DISTANCE	1					
3	682–48538–50	.CLAMP, CABLE 1 .COLLIER	2					
4	91690–30012	.PIN, SPRING .AGRAFFE	2					
5	97095–06012	.BOLT .BOULON	2					
6	92995–06600	.WASHER .RONDELLE	2					
7	95380–06600	.NUT, HEXAGON .ECROU	2					
8	60R–G4111–10	.HANDLE, GEAR SHIFT .POIGNEE, LEVIER D'EMBRAYAGE	1					FOR 60R-G8501-00 FOR 60R-G8501-00
	6AU–44111–10	.HANDLE, GEAR SHIFT .POIGNEE, LEVIER D'EMBRAYAGE	1					FOR 6AU-48501-00 FOR 6AU-48501-00
9	93210–12327	.O-RING .JOINT TORIQUE	1					
10	97095–05016	.BOLT .BOULON	1					
11	92995–05600	.WASHER .RONDELLE	1					
12	663–48344–00	.CABLE END, REMOTE CONTROL .CHAPE CABLE	1					
13	90468–18008	.CLIP .JONC	1					
14	663–48344–00	.CABLE END, REMOTE CONTROL .CHAPE CABLE	1					
15	90468–18008	.CLIP .JONC	1					
16	68T–42725–10	.GROMMET .PASSE-FIL	1					

Part No.	Applicable model
6AH-48501-00	F9.9H, F13.5B, F15C (F15), F20B (F20)

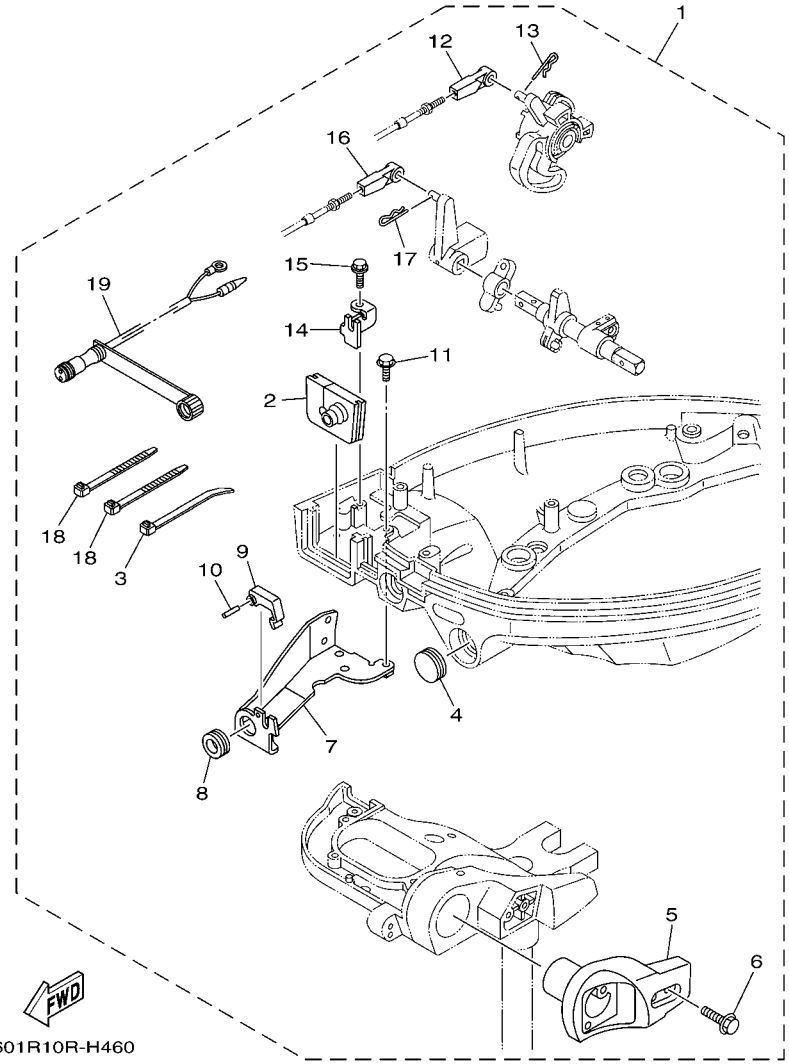

FIG. 46 REMO CON ATTACHMENT 8 COMMANDE A DISTANCE 8

REF. NO.	PART NO. N° PIECES	DESCRIPTION DESCRIPTION	602R					REMARKS REMARQUES
1	6AH–48501–00	REMOTE CONT. ATTACHMENT ASSY. COMMANDE A DISTANCE (KIT)	1					
2	6AH–42724–10	.GROMMET .PASSE-FIL	1					
3	90465–11M10	.CLAMP .BRIDE	1					
4	65W–42726–10	.GROMMET .PASSE-FIL	1					
5	6AH–83773–00	.BRACKET, SWITCH .JOINT TORIQUE, COMMUTATEUR	1					
6	97595–06530	.BOLT, WITH WASHER .VIS HEXAGONAL AVC RONDELLE	2					
7	6AH–48532–00	.BRACKET, REMOTE CONTROL 2 .ETRIER 2, COMMANDE A DISTANCE	1					
8	90480–19031	.GROMMET .PASSE-FIL	1					
9	682–48538–50	.CLAMP, CABLE 1 .COLLIER	1					
10	91690–30012	.PIN, SPRING .AGRAFFE	1					
11	97595–06514	.BOLT, WITH WASHER .VIS HEXAGONAL AVC RONDELLE	2					
12	663–48344–00	.CABLE END, REMOTE CONTROL .CHAPE CABLE	1					
13	90468–18008	.CLIP .JONC	1					
14	6AH–48531–00	.BRACKET, REMOTE CONTROL 1 .ETRIER 1, COMMANDE A DISTANCE	1					
15	90109–06M86	.BOLT .BOULON	1					
16	663–48344–00	.CABLE END, REMOTE CONTROL .CHAPE CABLE	1					
17	90468–18008	.CLIP .JONC	1					
18	90465–13M18	.CLAMP .BRIDE	2					
19	6D5–84340–00	.SOCKET CORD ASSY 1 .DOUILLE	1					

Part No.	Applicable model
65W-48501-00	F20A, F25A (F25), FT25B (T25)

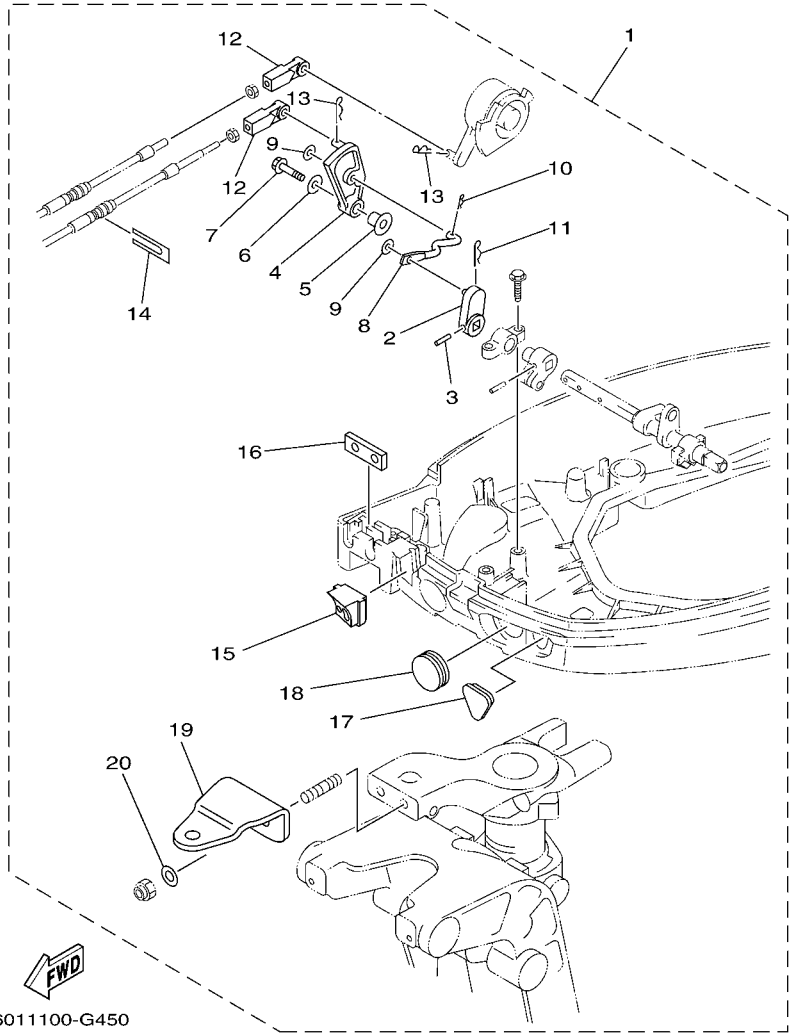

6011100-G450

FIG. 47 REMO CON ATTACHMENT 9 COMMANDE A DISTANCE 9

REF. NO.	PART NO. N° PIECES	DESCRIPTION DESCRIPTION	602R					REMARKS REMARQUES
1	65W–48501–00	REMOTE CONT. ATTACHMENT ASSY. COMMANDE A DISTANCE (KIT)	1					
2	65W–44142–00	.JOINT .AXE	1					
3	90254–03M05	.PIN, SPRING .RIVET, TETE TRONCONIQUE	1					
4	65W–44125–00	.LEVER, SHIFT ROD .LEVIER, TIGE D'INVERSION	1					
5	90387–06M29	.COLLAR .COLLERETTE	1					
6	90201–06M31	.WASHER, PLATE .RONDELLE, PLATE	1					
7	97595–06525	.BOLT, WITH WASHER .VIS HEXAGONAL AVC RONDELLE	1					
8	65W–44192–00	.JOINT, ROD 1 .RACCORD 1, BIELLETTE	1					
9	90201–05M06	.WASHER, PLATE .RONDELLE, PLATE	2					
10	90468–10005	.CLIP .JONC	1					
11	90468–18008	.CLIP .JONC	1					
12	663–48344–00	.CABLE END, REMOTE CONTROL .CHAPE CABLE	2					
13	90468–18008	.CLIP .JONC	2					
14	6H3–48538–00	.CLAMP, CABLE 1 .COLLIER	1					
15	65W–42725–21	.GROMMET .PASSE-FIL	1					
16	62Y–42727–00	.GROMMET .PASSE-FIL	1					
17	65W–26326–10	.GROMMET .RONDELLE CAOUTCHOUC	1					
18	65W–42726–10	.GROMMET .PASSE-FIL	1					
19	65W–48511–00	.HOOK, STEERING .ATTACHE, DIRECTION	1					
20	90201–10120	.WASHER, PLATE .RONDELLE, PLATE	2					

Part No.	Applicable model
6BL-48501-00	F25D (F25)

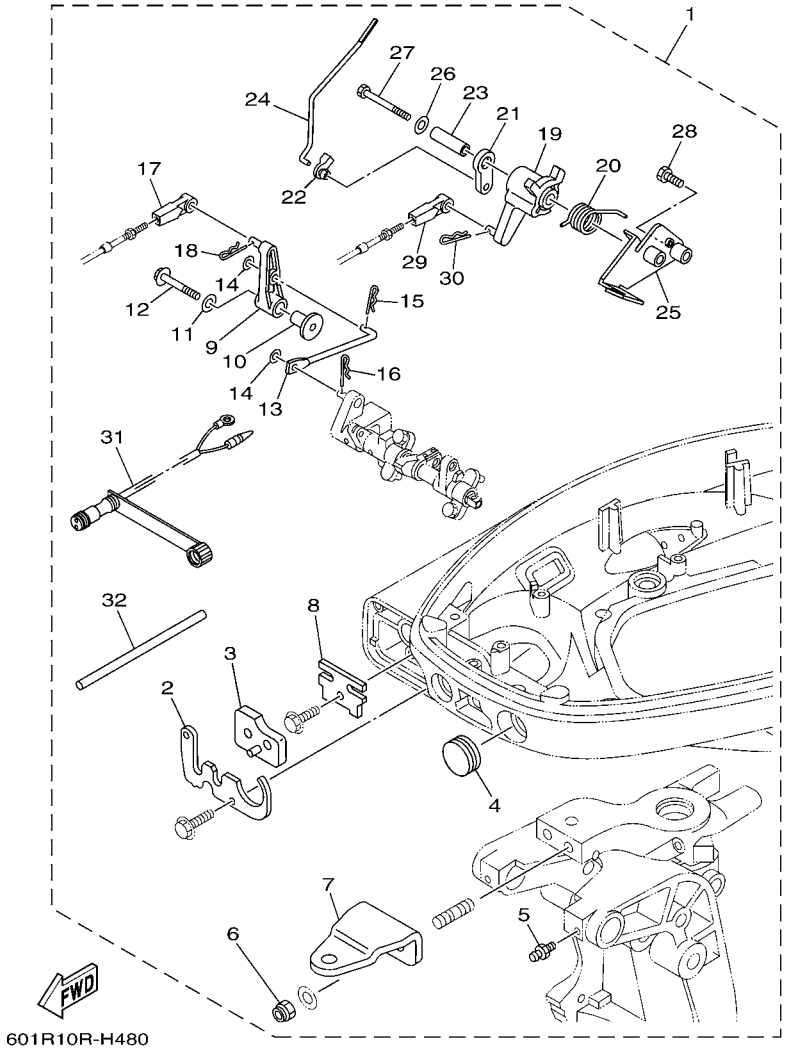

601R10R-H480

FIG. 48 REMO CON ATTACHMENT 10 COMMANDE A DISTANCE 10

REF. NO.	PART NO. N° PIECES	DESCRIPTION DESCRIPTION	602R					REMARKS REMARQUES
1	6BL–48501–00	REMOTE CONT. ATTACHMENT ASSY. COMMANDE A DISTANCE (KIT)	1					
2	6BL–42761–00	.STOPPER .PLAQUETTE	1					
3	6BL–42727–00	.GROMMET .PASSE-FIL	1					
4	65W–42726–10	.GROMMET .PASSE-FIL	1					
5	93700–06M03	.NIPPLE, GREASE .PION	2					
6	90185–10051	.NUT, SELF-LOCKING .ECROU,AUTO-BLOQUANT	2					
7	65W–48511–00	.HOOK, STEERING .ATTACHE, DIRECTION	1					
8	6BL–48538–00	.CLAMP, CABLE 1 .COLLIER	1					
9	6BL–44125–00	.LEVER, SHIFT ROD .LEVIER, TIGE D'INVERSION	1					
10	90387–06M86	.COLLAR .COLLERETTE	1					
11	90201–06M31	.WASHER, PLATE .RONDELLE, PLATE	1					
12	97595–06535	.BOLT, WITH WASHER .VIS HEXAGONAL AVC RONDELLE	1					
13	6BL–44192–00	.LINK, SHIFT ROD .BIELLETTE	1					
14	90201–05M06	.WASHER, PLATE .RONDELLE, PLATE	2					
15	90468–10005	.CLIP .JONC	1					
16	90468–18001	.CLIP .JONC	1					
17	663–48344–00	.CABLE END, REMOTE CONTROL .CHAPE CABLE	1					
18	90468–18008	.CLIP .JONC	1					
19	6BL–41638–00	.PULLEY .POULIE	1					
20	90508–20040	.SPRING, TORSION .RESSORT, TORSION	1					
21	65W–41283–00	.LEVER, FREE ACCEL. .LEVIER	1					
22	6J8–41262–00	.JOINT, CHOKE LEVER .RACCORD, LEVIER DE STARTER	1					
23	90387–06139	.COLLAR .COLLERETTE	1					
24	6BL–41211–00	.LINK, ACCEL. .BIELLETTE, ACCELERATION	1					
25	6BL–14571–10	.BRACKET, THROTTLE .SUPPORT, ACCELERATEUR	1					
26	90201–06M31	.WASHER, PLATE .RONDELLE, PLATE	1					
27	97095–06065	.BOLT .BOULON	1					

Part No.	Applicable model
6BL-48501-00	F25D (F25)

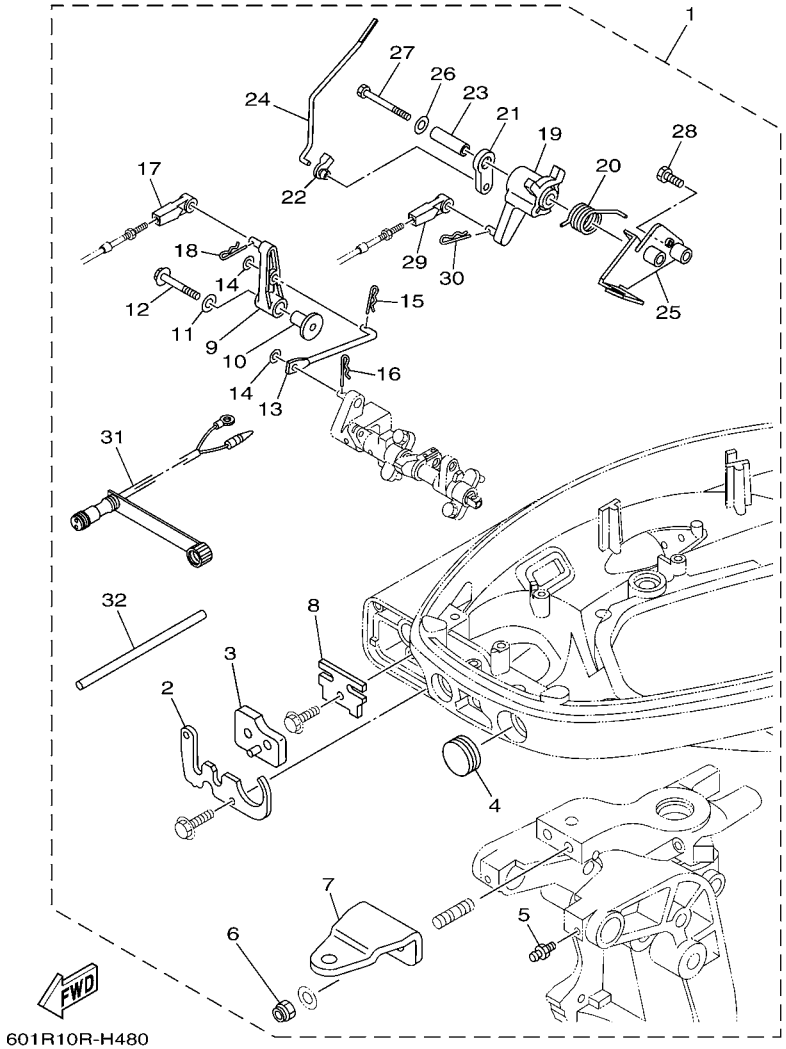

FIG. 48 REMO CON ATTACHMENT 10 COMMANDE A DISTANCE 10

REF. NO.	PART NO. N° PIECES	DESCRIPTION DESCRIPTION	602R					REMARKS REMARQUES
28	97095–06025	.BOLT .BOULON	1					
29	663–48344–00	.CABLE END, REMOTE CONTROL .CHAPE CABLE	1					
30	90468–18008	.CLIP .JONC	1					
31	6D5–84340–00	.SOCKET CORD ASSY 1 .DOUILLE	1					
32	90446–09M42	.HOSE (L160) .DURITE (L160)	2					

STEERING HOOK

Part No.	Applicable model	Remarks
6L2-48511-00	20D (20), 25N (25)	Steering guide type

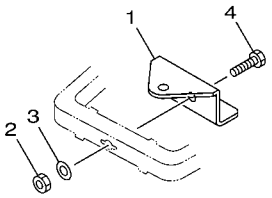

Part No.	Applicable model	Remarks
6J8-48511-51-4D	25N (25), 30D	Steering guide type

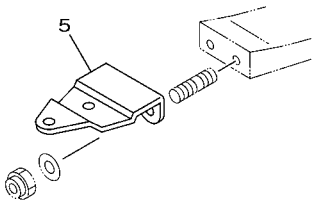

Part No.	Applicable model	Remarks
676-48511-01	40J, E40J, E40G EK40J, EK40G	Steering guide type

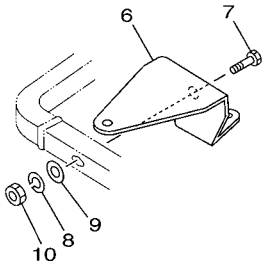

Part No.	Applicable model	Remarks
63D-48511-10	40V, 50H (50) 40Y FT50C, F50D	Steering guide type

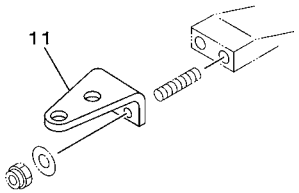

Part No.	Applicable model	Remarks
688-48511-11	75C, 90A (90) 75A, 85A	Steering guide type

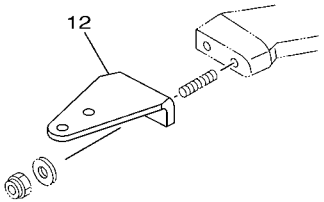

601R10R-H490

FIG. 49 STEERING HOOK 1 ATTACHE DIRECTION 1

REF. NO.	PART NO. N° PIECES	DESCRIPTION DESCRIPTION	602R					REMARKS REMARQUES
1	6L2–48511–00	HOOK, STEERING ATTACHE, DIRECTION	1					STEERING GUIDE STEERING GUIDE
2	90185–10051	NUT, SELF-LOCKING ECROU,AUTO-BLOQUANT	1					
3	92990–10600	WASHER, PLATE RONDELLE, PLATE	1					
4	97075–10040	BOLT BOULON	1					
5	6J8–48511–51–4D	HOOK, STEERING ATTACHE, DIRECTION	1					STEERING GUIDE STEERING GUIDE
6	676–48511–01	HOOK, STEERING ATTACHE, DIRECTION	1					STEERING GUIDE STEERING GUIDE
7	97075–10040	BOLT BOULON	1					
8	92990–10100	WASHER, SPRING RONDELLE, GROWER	1					
9	92990–10600	WASHER, PLATE RONDELLE, PLATE	1					
10	95380–10600	NUT ECROU	1					
11	63D–48511–10	HOOK, STEERING ATTACHE, DIRECTION	1					STEERING GUIDE STEERING GUIDE
12	688–48511–11	HOOK, STEERING ATTACHE, DIRECTION	1					STEERING GUIDE STEERING GUIDE

STEERING HOOK

Part No.	Applicable model	Remarks
63V-48511-01	F8C (F8), FT8D (T8) F9.9F (F9.9) FT9.9G (T9.9) 9.9F (9.9), 15F (15)	Steering guide type

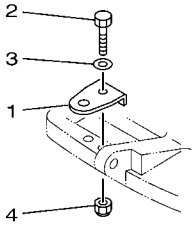

Part No.	Applicable model	Remarks
6AH-48511-00	F13.5B, F15C (F15), F20B (F20)	Steering guide type

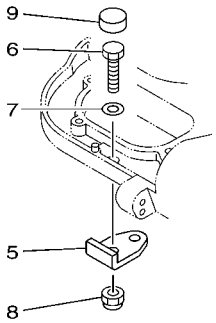

Part No.	Applicable model	Remarks
65W-48511-10	F20A, F25A (F25) F25C, FT25B (T25) F25D (F25) FT25F(T25) F30A (F30), F40B (F40) F30B (F30), F40F (F40) (E) 40X F40D F50F (F50), FT50G (T50) F60C (F60), FT60G (T60)	Steering guide type

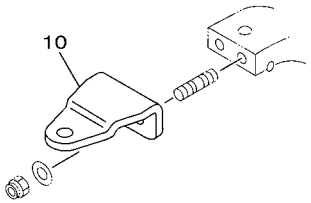

Part No.	Applicable model	Remarks
67F-48511-00	F75B (F75), F80B, F90B (F90) F100D	Steering guide type

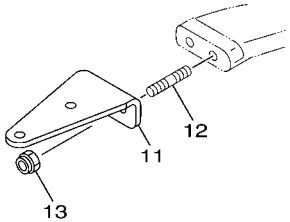

Part No.	Applicable model	Remarks
68V-48511-00	F75C, F80C, F95A, F100B, F115A (F115)	Steering guide type

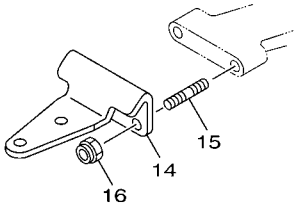

601R10R-H500

FIG. 50 STEERING HOOK 2 ATTACHE DIRECTION 2

REF. NO.	PART NO. N° PIECES	DESCRIPTION DESCRIPTION	602R					REMARKS REMARQUES
1	63V–48511–01	HOOK, STEERING ATTACHE, DIRECTION	1					STEERING GUIDE STEERING GUIDE
2	97075–08035	BOLT BOULON	1					
3	92995–08600	WASHER RONDELLE	1					
4	90185–08057	NUT, SELF-LOCKING ECROU,AUTO-BLOQUANT	1					
5	6AH–48511–00	HOOK, STEERING ATTACHE, DIRECTION	1					STEERING GUIDE STEERING GUIDE
6	97095–08025	BOLT BOULON	1					
7	92995–08600	WASHER RONDELLE	1					
8	90185–08057	NUT, SELF-LOCKING ECROU,AUTO-BLOQUANT	1					
9	6AH–44194–00	CAP CAPUCHON	1					
10	65W–48511–10	HOOK, STEERING ATTACHE, DIRECTION	1					STEERING GUIDE STEERING GUIDE
11	67F–48511–00	HOOK, STEERING ATTACHE, DIRECTION	1					STEERING GUIDE STEERING GUIDE
12	90116–10175	BOLT, STUD GOUJON	2					
13	90185–10051	NUT, SELF-LOCKING ECROU,AUTO-BLOQUANT	2					
14	68V–48511–00	HOOK, STEERING ATTACHE, DIRECTION	1					STEERING GUIDE STEERING GUIDE
15	90116–10175	BOLT, STUD GOUJON	2					
16	90185–10051	NUT, SELF-LOCKING ECROU,AUTO-BLOQUANT	2					

STEERING HOOK

Part No.	Applicable model	Remarks
676-48511-10	6C (6), 8C (8) E8D, EK8D	Ball post type

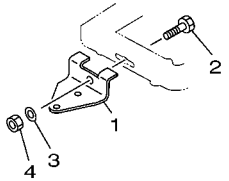

Part No.	Applicable model	Remarks
6G8-48511-10	9.9F (9.9) 15F (15), 30D	Ball post type

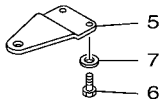

Part No.	Applicable model	Remarks
6J8-48511-01-4D	20D (20), 30D	Ball post type/ Steering guide type

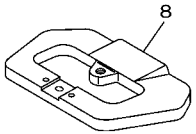

Part No.	Applicable model	Remarks
689-48511-01	25B, 25X, 30H E25B, E30H	Ball post type/ Steering guide type

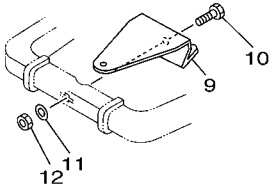

Part No.	Applicable model	Remarks
700-48510-12	6C (6), 8C (8) E8D, EK8D 25B, 25X, 30H E25B, E30H	Rope type

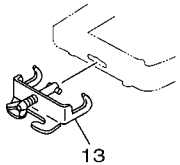

Part No.	Applicable model	Remarks
6G8-48511-00	30D	Rope type

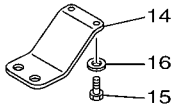

Part No.	Applicable model	Remarks
69G-48511-10	FT8D (T8) FT9.9G (T9.9)	For Linkage to main-engine

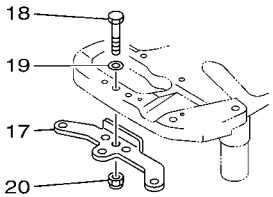

601R10R-H510

FIG. 51 STEERING HOOK 3 — ATTACHE DIRECTION 3

REF. NO.	PART NO. N° PIECES	DESCRIPTION DESCRIPTION	602R					REMARKS REMARQUES
1	676–48511–10	HOOK, STEERING ATTACHE, DIRECTION	1					BALL POST TYPE BALL POST TYPE
2	97075–10040	BOLT BOULON	1					
3	92990–10600	WASHER, PLATE RONDELLE, PLATE	1					
4	90185–10051	NUT, SELF-LOCKING ECROU,AUTO-BLOQUANT	1					
5	6G8–48511–10	HOOK, STEERING ATTACHE, DIRECTION	1					BALL POST TYPE BALL POST TYPE
6	97095–06016	BOLT BOULON	2					
7	92995–06600	WASHER RONDELLE	2					
8	6J8–48511–01–4D	HOOK, STEERING ATTACHE, DIRECTION	1					
9	689–48511–01	HOOK, STEERING ATTACHE, DIRECTION	1					
10	97075–10040	BOLT BOULON	1					
11	92990–10600	WASHER, PLATE RONDELLE, PLATE	1					
12	90185–10051	NUT, SELF-LOCKING ECROU,AUTO-BLOQUANT	1					
13	700–48510–12	STEERING HOOK ASSY ATTACHE DE DIRECTION (ENS.)	1					ROPE TYPE ROPE TYPE
14	6G8–48511–00	HOOK, STEERING ATTACHE, DIRECTION	1					ROPE TYPE ROPE TYPE
15	97095–06016	BOLT BOULON	2					
16	92995–06600	WASHER RONDELLE	2					
17	69G–48511–10	HOOK, STEERING ATTACHE, DIRECTION	1					
18	97075–08035	BOLT BOULON	1					
19	92995–08600	WASHER RONDELLE	1					
20	90185–08057	NUT, SELF-LOCKING ECROU,AUTO-BLOQUANT	1					

Part No.	Applicable model
63V-61350-00	9.9F (9.9), 15F (15), E9.9D, E15D

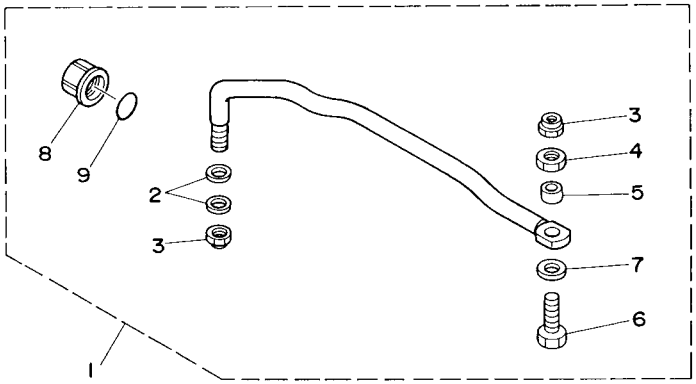

601R10R-H520

FIG. 52 STEERING GUIDE 1 — FIXATION DE DIRECTION 1

REF. NO.	PART NO. N° PIECES	DESCRIPTION DESCRIPTION	602R					REMARKS REMARQUES
1	63V–61350–00	STEERING GUIDE ATTACHMENT KIT FIXATIONS DE DIRECTION	1					
2	90201–10M20	.WASHER, PLATE .RONDELLE, PLATE	2					
3	90185–09M01	.NUT, SELF-LOCKING .ECROU,AUTO-BLOQUANT	2					
4	90170–09M03	.NUT .ECROU	1					
5	90387–10M42	.COLLAR .COLLERETTE	1					
6	6E5–61355–00	.BOLT .BOULON	1					
7	90201–10M63	.WASHER, PLATE .RONDELLE, PLATE	1					
8	6E5–43145–01	.CAP, CLAMP BRACKET .CAPUCHON, PRESSE	1					
9	93210–16275	.O-RING .JOINT TORIQUE	1					

Part No.	Applicable model
68T-61350-10	F6A (F6), F8C (F8), FT8D (T8) F9.9F (F9.9), FT9.9G (T9.9)

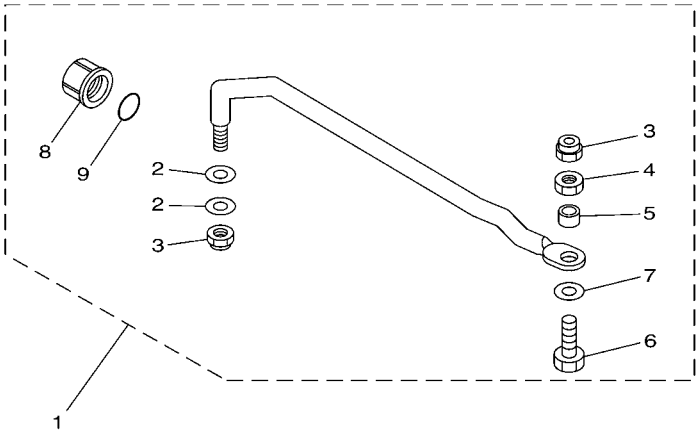

6011100-G500

FIG. 53 STEERING GUIDE 2 — FIXATION DE DIRECTION 2

REF. NO.	PART NO. N° PIECES	DESCRIPTION DESCRIPTION	602R					REMARKS REMARQUES
1	68T–61350–10	STEERING GUIDE ATTACHMENT KIT FIXATIONS DE DIRECTION	1					
2	90201–10M20	.WASHER, PLATE .RONDELLE, PLATE	2					
3	90185–09M01	.NUT, SELF-LOCKING .ECROU,AUTO-BLOQUANT	2					
4	90170–09M03	.NUT .ECROU	1					
5	90387–10M42	.COLLAR .COLLERETTE	1					
6	6E5–61355–00	.BOLT .BOULON	1					
7	90201–10M63	.WASHER, PLATE .RONDELLE, PLATE	1					
8	6E5–43145–01	.CAP, CLAMP BRACKET .CAPUCHON, PRESSE	1					
9	93210–16275	.O-RING .JOINT TORIQUE	1					

Part No.	Applicable model
6AH-61350-00	F13.5B, F15C (F15), F20B (F20)

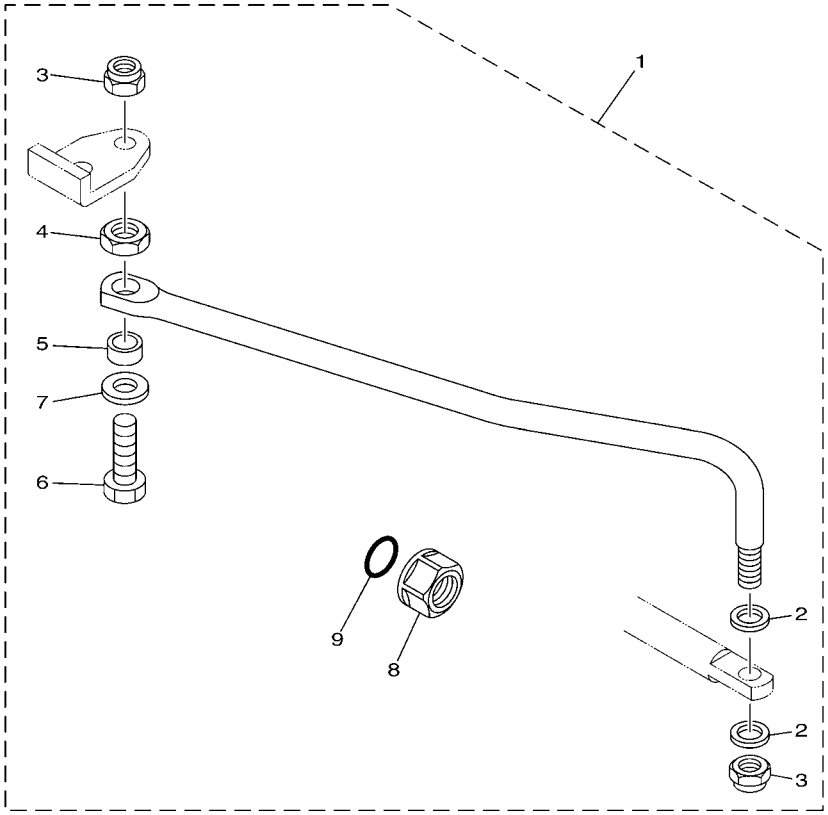

6011100-G510

FIG. 54 STEERING GUIDE 3 FIXATION DE DIRECTION 3

REF. NO.	PART NO. N° PIECES	DESCRIPTION DESCRIPTION	602R					REMARKS REMARQUES
1	6AH–61350–00	STEERING GUIDE ATTACHMENT KIT FIXATIONS DE DIRECTION	1					
2	90201–10M20	.WASHER, PLATE .RONDELLE, PLATE	2					
3	90185–09M01	.NUT, SELF-LOCKING .ECROU,AUTO-BLOQUANT	2					
4	90170–09M03	.NUT .ECROU	1					
5	90387–10M42	.COLLAR .COLLERETTE	1					
6	6E5–61355–00	.BOLT .BOULON	1					
7	90201–10M63	.WASHER, PLATE .RONDELLE, PLATE	1					
8	6E5–43145–01	.CAP, CLAMP BRACKET .CAPUCHON, PRESSE	1					
9	93210–16275	.O-RING .JOINT TORIQUE	1					

Part No.	Applicable model
689-61350-02	20D (20), 25N, 25B, 30H, 30D, 40J, E40G EK40J, E25B, E30H

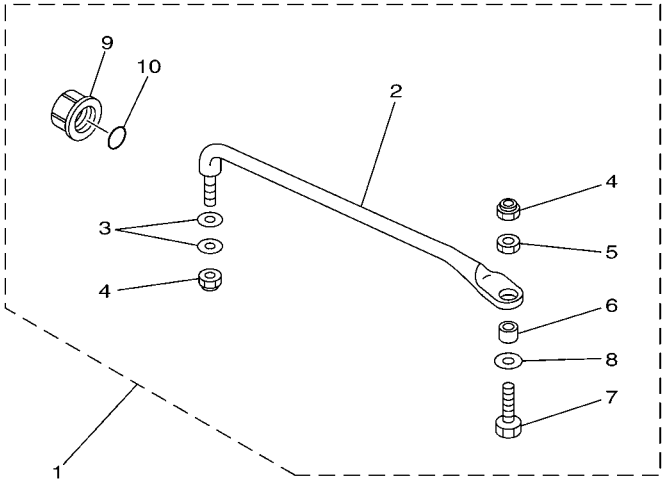

601R10R-H550

FIG. 55 STEERING GUIDE 4 — FIXATION DE DIRECTION 4

REF. NO.	PART NO. N° PIECES	DESCRIPTION DESCRIPTION	602R					REMARKS REMARQUES
1	689–61350–02	STEERING GUIDE ATTACHMENT KIT FIXATIONS DE DIRECTION	1					
2	689–61351–01	.ROD, STEERING LINK .RENVOI DE DIRECTION	1					
3	90201–10M20	.WASHER, PLATE .RONDELLE, PLATE	2					
4	90185–09M01	.NUT, SELF-LOCKING .ECROU,AUTO-BLOQUANT	2					
5	90170–09M03	.NUT .ECROU	1					
6	90387–10M42	.COLLAR .COLLERETTE	1					
7	6E5–61355–00	.BOLT .BOULON	1					
8	90201–10M63	.WASHER, PLATE .RONDELLE, PLATE	1					
9	6E5–43145–01	.CAP, CLAMP BRACKET .CAPUCHON, PRESSE	1					
10	93210–16275	.O-RING .JOINT TORIQUE	1					

Part No.	Applicable model
63D-61350-00	40V, 50H (50), 40Y, FT50C, F50D

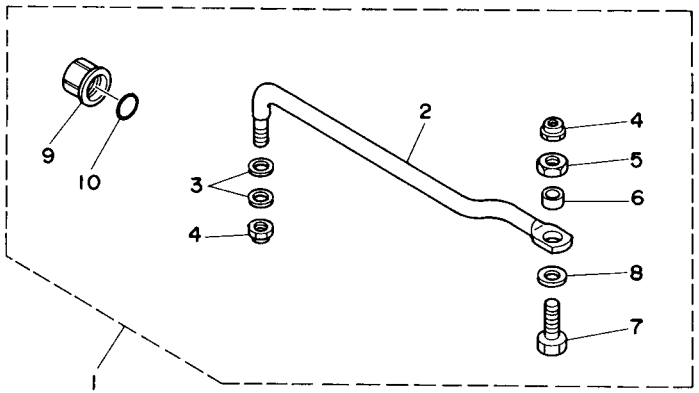

6011100-G530

FIG. 56 STEERING GUIDE 5 — FIXATION DE DIRECTION 5

REF. NO.	PART NO. N° PIECES	DESCRIPTION DESCRIPTION	602R					REMARKS REMARQUES
1	63D–61350–00	STEERING GUIDE ATTACHMENT KIT FIXATIONS DE DIRECTION	1					
2	63D–61351–00	.ROD, STEERING LINK .RENVOI DE DIRECTION	1					
3	90201–10M20	.WASHER, PLATE .RONDELLE, PLATE	2					
4	90185–09M01	.NUT, SELF-LOCKING .ECROU,AUTO-BLOQUANT	2					
5	90170–09M03	.NUT .ECROU	1					
6	90387–10M42	.COLLAR .COLLERETTE	1					
7	90101–09M01	.BOLT .BOULON	1					
8	90201–10M63	.WASHER, PLATE .RONDELLE, PLATE	1					
9	6E5–43145–01	.CAP, CLAMP BRACKET .CAPUCHON, PRESSE	1					
10	93210–16275	.O-RING .JOINT TORIQUE	1					

Part No.	Applicable model
65W-61350-00	E40X, 40X, F20A, F25A (F25), F25C, FT25B (T25), F30A (F30), F40B (F40), F50F (F50), FT50G (T50), F40D F60C (F60), FT60D (T60)

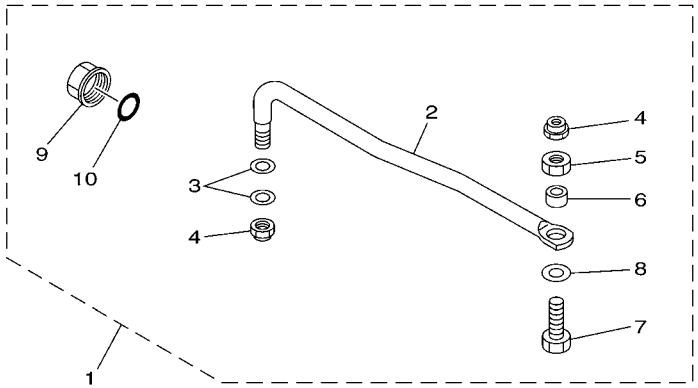

6011100-G540

FIG. 57 STEERING GUIDE 6 — FIXATION DE DIRECTION 6

REF. NO.	PART NO. N° PIECES	DESCRIPTION DESCRIPTION	602R					REMARKS REMARQUES
1	65W–61350–00	STEERING GUIDE ATTACHMENT KIT FIXATIONS DE DIRECTION	1					
2	65W–61351–00	.ROD, STEERING LINK .RENVOI DE DIRECTION	1					
3	90201–10M20	.WASHER, PLATE .RONDELLE, PLATE	2					
4	90185–09M01	.NUT, SELF-LOCKING .ECROU,AUTO-BLOQUANT	2					
5	90170–09M03	.NUT .ECROU	1					
6	90387–10M42	.COLLAR .COLLERETTE	1					
7	90101–09M01	.BOLT .BOULON	1					
8	90201–10M63	.WASHER, PLATE .RONDELLE, PLATE	1					
9	6E5–43145–01	.CAP, CLAMP BRACKET .CAPUCHON, PRESSE	1					
10	93210–16275	.O-RING .JOINT TORIQUE	1					

Part No.	Applicable model
697-61350-00	55B
688-61350-10	60F, 70B (70), 75C, 90A (90) 75A, 85A, E60H

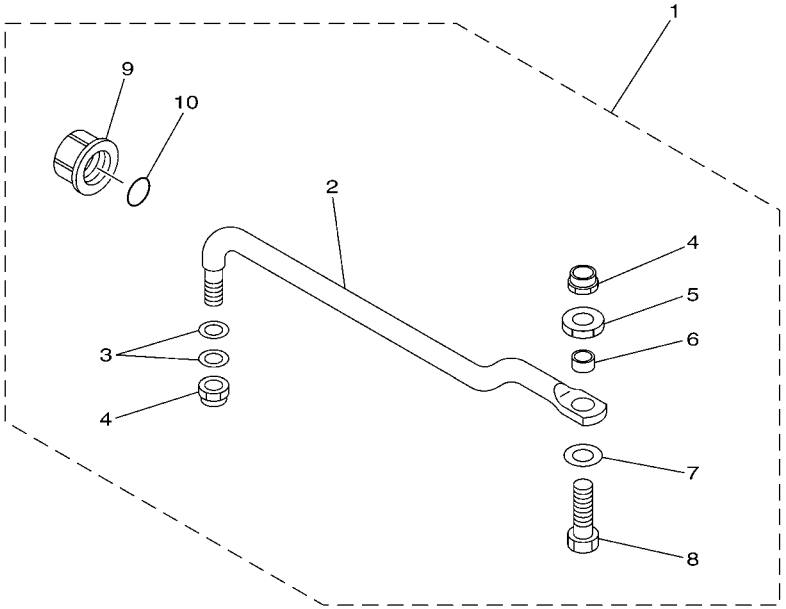

6011100-G550

FIG. 58 STEERING GUIDE 7 FIXATION DE DIRECTION 7

REF. NO.	PART NO. N° PIECES	DESCRIPTION DESCRIPTION	602R					REMARKS REMARQUES
1	697–61350–00	STEERING GUIDE ATTACHMENT KIT FIXATIONS DE DIRECTION	1					UR UR
	688–61350–10	STEERING GUIDE ATTACHMENT KIT FIXATIONS DE DIRECTION	1					UR UR
2	697–61351–00	.ROD, STEERING LINK .RENVOI DE DIRECTION	1					FOR 697-61350-00 FOR 697-61350-00
	688–61351–10	.ROD, STEERING LINK .RENVOI DE DIRECTION	1					FOR 688-61350-10 FOR 688-61350-10
3	90201–10M20	.WASHER, PLATE .RONDELLE, PLATE	2					
4	90185–09M01	.NUT, SELF-LOCKING .ECROU,AUTO-BLOQUANT	2					
5	90170–09M03	.NUT .ECROU	1					
6	90387–10M42	.COLLAR .COLLERETTE	1					
7	90201–10M63	.WASHER, PLATE .RONDELLE, PLATE	1					
8	6E5–61355–00	.BOLT .BOULON	1					
9	6E5–43145–01	.CAP, CLAMP BRACKET .CAPUCHON, PRESSE	1					
10	93210–16275	.O-RING .JOINT TORIQUE	1					

Part No.	Applicable model
67F-61350-00	F75B (F75), F80B F90B (F90), F100D

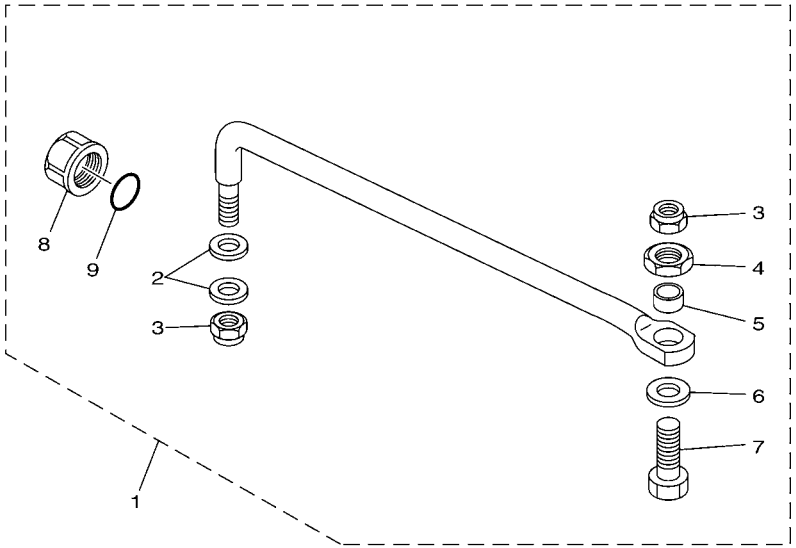

6011100-G560

FIG. 59 STEERING GUIDE 8 FIXATION DE DIRECTION 8

REF. NO.	PART NO. N° PIECES	DESCRIPTION DESCRIPTION	602R					REMARKS REMARQUES
1	67F–61350–00	STEERING GUIDE ATTACHMENT KIT FIXATIONS DE DIRECTION	1					
2	90201–10M20	.WASHER, PLATE .RONDELLE, PLATE	2					
3	90185–09M01	.NUT, SELF-LOCKING .ECROU,AUTO-BLOQUANT	2					
4	90170–09M03	.NUT .ECROU	1					
5	90387–10M42	.COLLAR .COLLERETTE	1					
6	90201–10M63	.WASHER, PLATE .RONDELLE, PLATE	1					
7	90101–09M01	.BOLT .BOULON	1					
8	6E5–43145–01	.CAP, CLAMP BRACKET .CAPUCHON, PRESSE	1					
9	93210–16275	.O-RING .JOINT TORIQUE	1					

Part No.	Applicable model
6E5-61350-02	F75C, F95A, F100B F115 – F250, 115 – 300

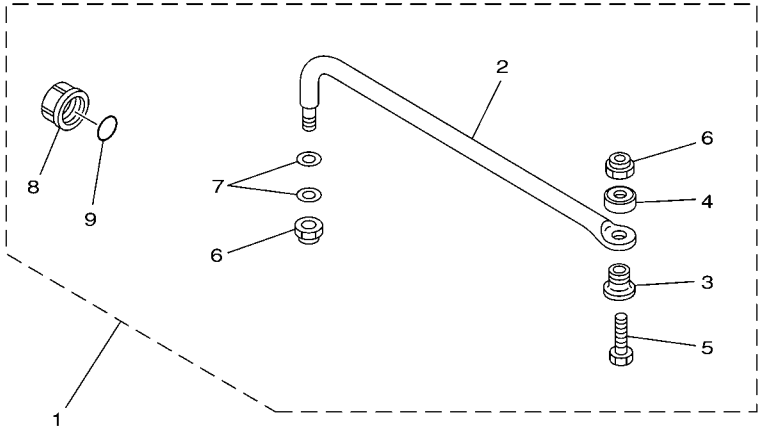

6011100-G570

FIG. 60 STEERING GUIDE 9 — FIXATION DE DIRECTION 9

REF. NO.	PART NO. N° PIECES	DESCRIPTION DESCRIPTION	602R					REMARKS REMARQUES
1	6E5–61350–02	STEERING GUIDE ATTACHMENT KIT FIXATIONS DE DIRECTION	1					
2	6E5–61351–01	.ROD, STEERING LINK .RENVOI DE DIRECTION	1					
3	90387–10M61	.COLLAR .COLLERETTE	1					
4	90560–12M01	.SPACER .ENTRETOISE	1					
5	6E5–61355–00	.BOLT .BOULON	1					
6	90185–09M01	.NUT, SELF-LOCKING .ECROU,AUTO-BLOQUANT	2					
7	90201–10M20	.WASHER, PLATE .RONDELLE, PLATE	2					
8	6E5–43145–01	.CAP, CLAMP BRACKET .CAPUCHON, PRESSE	1					
9	93210–16275	.O-RING .JOINT TORIQUE	1					

FIG. 61 STEERING GUIDE 10 FIXATION DE DIRECTION 10

Part No.	Applicable model
6E5-61301-01	40 – 300, F30 – F250

Twin engine tie-bar kit
Adjustable distance : 600 mm (23.6 in.) – 800 mm (31.5 in.)

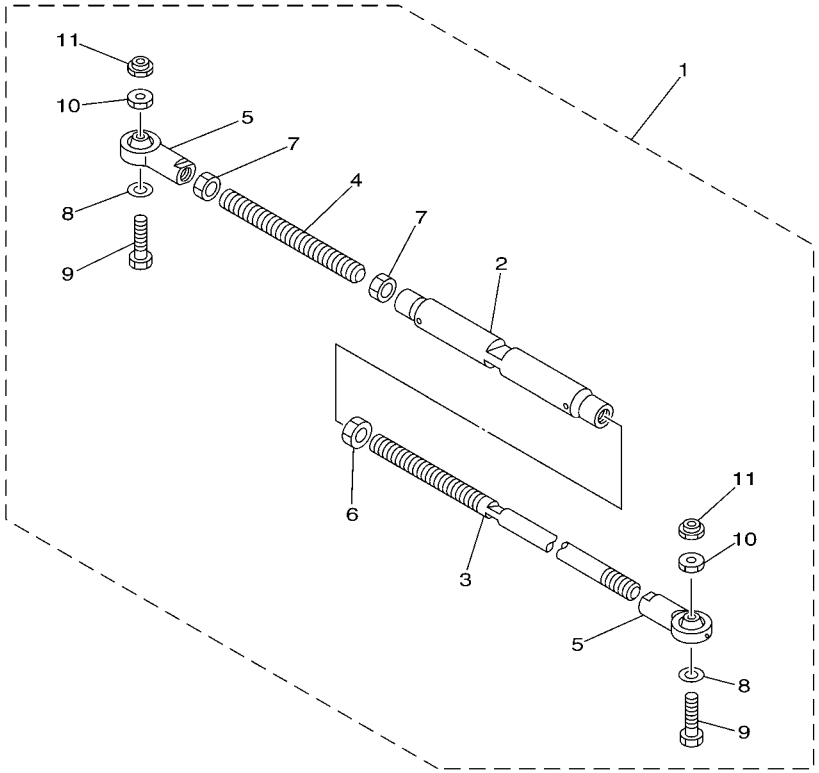

6011100-G580

REF. NO.	PART NO. N° PIECES	DESCRIPTION DESCRIPTION	602R					REMARKS REMARQUES
1	6E5–61301–01	TWIN KIT (L:600-800MM) JUMELE KIT (L:600-800MM)	1					
2	6E5–61313–00	.ADJUSTER .TENDEUR	1					
3	6E5–61311–11	.TIE BAR .BARRE D'ACCOUPLEMENT	1					
4	6E5–61315–00	.TIE BAR .BARRE D'ACCOUPLEMENT	1					
5	6E5–61303–00	.STEERING AXLE COMP. .AXLE COMP.	2					
6	90170–14M06	.NUT .ECROU	1					
7	95380–14700	.NUT .ECROU	2					
8	90201–10M76	.WASHER, PLATE .RONDELLE, PLATE	2					
9	90101–09M70	.BOLT .BOULON	2					
10	90170–09M05	.NUT .ECROU	2					
11	90185–09M01	.NUT, SELF-LOCKING .ECROU,AUTO-BLOQUANT	2					

Part No.	Applicable model
6BG-61350-00	F25D (F25), FT25F (T25) F30B (F30), F40F (F40)

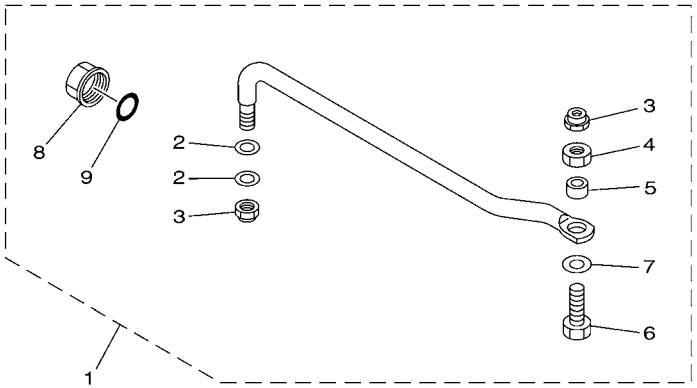

601R10R-H620

FIG. 62 STEERING GUIDE 11 FIXATION DE DIRECTION 11

REF. NO.	PART NO. N° PIECES	DESCRIPTION DESCRIPTION	602R					REMARKS REMARQUES
1	6BG–61350–00	STEERING GUIDE ATTACHMENT KIT FIXATIONS DE DIRECTION	1					
2	90201–10M20	.WASHER, PLATE .RONDELLE, PLATE	2					
3	90185–09M01	.NUT, SELF-LOCKING .ECROU,AUTO-BLOQUANT	2					
4	90170–09M03	.NUT .ECROU	1					
5	90387–10M42	.COLLAR .COLLERETTE	1					
6	90101–09M01	.BOLT .BOULON	1					
7	90201–10M63	.WASHER, PLATE .RONDELLE, PLATE	1					
8	6E5–43145–01	.CAP, CLAMP BRACKET .CAPUCHON, PRESSE	1					
9	93210–16275	.O-RING .JOINT TORIQUE	1					

NUMERICAL INDEX
INDEX NUMERIQUE

PART NO. N° PIECES	REF. NO.
6BL–14571–10	48 – 25
65W–26326–10	44 – 10
	47 – 17
6G8–26363–00	41 – 15
	43 – 15
6G8–26364–00	41 – 16
	43 – 16
6BL–41211–00	48 – 24
6J8–41262–00	48 – 22
65W–41283–00	48 – 21
6BL–41638–00	48 – 19
63V–42154–00	40 – 11
6L2–42154–01	41 – 6
6J8–42169–01	43 – 8
6L2–42191–01	41 – 7
63V–42192–00	40 – 15
6L2–42192–20	41 – 8
6J8–42723–51	43 – 17
6AH–42724–10	46 – 2
6J8–42724–10	43 – 19
68T–42725–10	45 – 16
65W–42725–21	47 – 15
66T–42725–30	44 – 9
65W–42726–10	44 – 11
	46 – 4
	47 – 18
	48 – 4
62Y–42727–00	47 – 16
6BL–42727–00	48 – 3
6BL–42761–00	48 – 2
6X4–42821–00	13 – 53
6J8–42846–00	43 – 18
6E5–43145–01	52 – 8
	53 – 8
	54 – 8
	55 – 9
	56 – 9
	57 – 9
	58 – 9
	59 – 8
	60 – 8
	62 – 8
6AU–44111–10	45 – 8
65W–44125–00	47 – 4
6BL–44125–00	48 – 9
66T–44125–01	44 – 6
65W–44142–00	47 – 2
6J8–44173–02	43 – 7

PART NO. N° PIECES	REF. NO.
6J8–44177–00	43 – 5
6X3–44191–00	12 – 73
6X6–44191–00	18 – 66
	19 – 72
	20 – 72
6X7–44191–00	22 – 16
65W–44192–00	47 – 8
6BL–44192–00	48 – 13
6AH–44194–00	50 – 9
701–48101–23	1 – 1
	5 – 1
701–48101–51	1 – 1
	5 – 1
701–48101–G1	1 – 1
	5 – 1
701–48102–23	1 – 1
	5 – 1
701–48102–51	1 – 1
	5 – 1
701–48102–G1	1 – 1
	5 – 1
6X3–48111–00	12 – 58
6X0–48116–00	12 – 72
6X6–48118–00	18 – 35
	19 – 41
	20 – 41
	22 – 40
6X5–48119–00	13 – 61
6X7–48119–00	22 – 12
6X6–48119–03	18 – 12
6X5–48119–10	13 – 60
6X6–48119–10	19 – 13
	20 – 13
704–48119–31	10 – 59
704–48119–41	11 – 68
704–48119–B0	9 – 63
6X0–48121–00	12 – 37
6X0–48127–00	12 – 53
6X5–48127–00	13 – 34
6X6–48127–00	18 – 70
	19 – 76
	20 – 75
6X7–48127–00	20 – 92
	22 – 43
EL8–48127–00	9 – 25
	10 – 23
	11 – 23
	12 – 23

PART NO. N° PIECES	REF. NO.
EL8–48127–00	18 – 11
	19 – 12
	20 – 12
	22 – 44
6X5–48127–10	13 – 39
6X5–48127–20	13 – 41
6X0–48128–00	12 – 64
	20 – 90
	22 – 57
6X6–48128–00	18 – 71
	19 – 77
	20 – 76
	22 – 11
6X7–48128–00	22 – 65
703–48128–00	13 – 35
704–48128–00	9 – 2
	10 – 2
	11 – 2
	11 – 62
6X3–48129–00	12 – 67
6X5–48129–00	13 – 36
6X6–48129–00	18 – 59
	19 – 65
	20 – 65
6A5–48129–10	9 – 12
701–48130–23	1 – 1
	6 – 1
701–48130–E0	1 – 1
	6 – 1
701–48133–00	5 – 42
	6 – 42
6X0–48138–00	12 – 4
701–48138–50	5 – 39
701–48140–E0	1 – 1
	6 – 1
6X5–48144–00	13 – 29
6X6–48144–00	18 – 58
704–48144–00	9 – 53
6X5–48144–10	13 – 28
6X6–48144–10	18 – 26
	19 – 31
	20 – 31
704–48144–10	10 – 50
704–48144–20	11 – 50
6X5–48152–00	13 – 6
703–48152–00	7 – 57
	8 – 57
701–48152–11	5 – 13

PART NO. N° PIECES	REF. NO.
701–48152–11	6 – 13
701–48152–20	5 – 13
	6 – 13
6X0–48153–00	12 – 47
703–48153–00	7 – 3
	8 – 3
	13 – 22
704–48153–00	9 – 59
	10 – 55
	11 – 55
701–48153–12	5 – 33
	6 – 33
6X0–48155–00	12 – 60
6X0–48156–00	12 – 65
	22 – 63
704–48156–00	11 – 63
	19 – 48
	20 – 48
6X6–48158–00	18 – 38
	19 – 44
	20 – 44
	22 – 33
EL8–48158–00	12 – 30
EL8–48164–00	9 – 43
	10 – 41
	11 – 41
	12 – 38
704–48166–00	9 – 60
	10 – 56
	11 – 56
6X6–48167–00	18 – 16
6X7–48167–00	22 – 14
704–48167–01	10 – 61
6X6–48167–10	19 – 17
	20 – 17
6X7–48167–10	22 – 13
704–48167–11	11 – 69
6X6–48167–20	19 – 18
	20 – 18
6X6–48167–50	18 – 17
6X6–48167–60	19 – 19
	20 – 19
6X6–48171–00	18 – 9
	19 – 10
	20 – 10
	22 – 9
6X5–48175–00	13 – 71
6X6–48175–00	18 – 46

PART NO. N° PIECES	REF. NO.
6X6–48175–00	18 – 46
	19 – 54
	19 – 54
	20 – 54
6X6–48175–10	18 – 67
	19 – 73
6X5–48176–00	13 – 65
6X6–48176–00	18 – 21
704–48176–00	9 – 54
	10 – 51
6X6–48176–10	19 – 24
	20 – 24
	38 – 4
6X7–48176–10	22 – 66
704–48176–10	11 – 51
6X6–48176–50	18 – 68
	19 – 74
	20 – 73
6X6–48176–60	18 – 69
	19 – 75
	20 – 74
704–48178–00	11 – 66
	12 – 34
704–48178–10	9 – 64
	10 – 60
6X0–48187–00	12 – 11
6X6–48189–00	18 – 32
	19 – 38
	20 – 38
6X7–48189–00	22 – 20
703–48189–00	7 – 17
	8 – 17
	13 – 19
701–48189–11	5 – 31
	6 – 31
EL8–48191–00	9 – 18
	10 – 16
	11 – 16
	12 – 19
703–48192–00	9 – 55
	12 – 44
704–48192–00	9 – 46
	10 – 44
	11 – 44
704–48192–P0	10 – 52
	11 – 52
6X0–48193–00	12 – 63
6X6–48193–00	18 – 34

PART NO. N° PIECES	REF. NO.
6X6–48193–00	19 – 40
	20 – 40
	22 – 39
704–48193–00	9 – 50
	12 – 42
701–48196–11	5 – 7
	6 – 7
701–48197–10	5 – 3
	6 – 3
703–48198–00	7 – 14
	8 – 14
	13 – 16
	18 – 33
	19 – 39
	20 – 39
	22 – 38
701–48198–10	5 – 15
	6 – 15
6X6–481A0–01	18 – 24
	19 – 29
6X7–481A0–01	22 – 18
6X6–481A0–11	20 – 29
6X6–481A0–21	19 – 82
6X6–481A0–31	20 – 83
703–48201–16	2 – 1
	8 – 1
703–48201–A3	2 – 1
	8 – 1
703–48202–15	2 – 1
	8 – 1
703–48203–15	2 – 1
	8 – 1
703–48203–A3	2 – 1
	8 – 1
704–48203–P1	3 – 2
	10 – 1
703–48204–13	2 – 1
	7 – 1
6X6–48205–00	15 – 1
	18 – 1
6X6–48205–10	15 – 1
	18 – 1
703–48205–17	2 – 1
	8 – 1
6X6–48205–20	15 – 1
	18 – 1
703–48205–A5	2 – 1
	8 – 1

PART NO. N° PIECES	REF. NO.
704–48205–B1	3 – 1
	9 – 1
704–48205–P1	3 – 2
	10 – 1
6X7–48206–00	21 – 1
	22 – 1
6X3–48206–01	4 – 1
	12 – 1
704–48206–P1	3 – 2
	10 – 1
6X6–48207–00	16 – 1
	19 – 1
6X5–48207–01	4 – 2
	13 – 1
6X6–48207–10	16 – 1
	19 – 1
703–48207–17	2 – 1
	8 – 1
6X6–48207–20	16 – 1
	19 – 1
703–48207–A5	2 – 1
	8 – 1
704–48207–P1	3 – 3
	11 – 1
6X6–48208–20	17 – 1
	20 – 1
6X6–48208–30	17 – 1
	20 – 1
703–48208–A4	2 – 1
	8 – 1
703–48210–16	2 – 1
	7 – 1
6X0–48211–00	12 – 25
703–48211–01	7 – 61
	8 – 61
6X6–48211–10	20 – 91
	22 – 51
6X6–48212–00	18 – 25
	19 – 30
	20 – 30
6X7–48212–00	22 – 19
703–48212–00	7 – 58
	8 – 58
EL8–48212–00	12 – 74
6X5–48213–00	13 – 58
6X6–48213–00	18 – 43
	19 – 51
	20 – 51

PART NO. N° PIECES	REF. NO.
701–48213–00	5 – 19
	6 – 19
703–48213–00	7 – 59
	8 – 59
EL8–48213–00	12 – 75
6X5–48214–00	13 – 63
6X5–48214–10	13 – 64
6X5–48215–00	13 – 80
6X6–48215–00	18 – 13
6X7–48215–00	22 – 17
703–48215–00	7 – 43
	8 – 43
704–48215–00	9 – 14
6X5–48215–10	13 – 81
6X6–48215–10	19 – 15
6X6–48215–20	20 – 15
704–48215–20	10 – 12
704–48215–30	11 – 12
6X6–48216–00	18 – 14
703–48216–00	7 – 65
6X6–48216–10	19 – 16
703–48216–10	7 – 66
6X6–48216–20	20 – 16
703–48218–00	8 – 64
6X5–48219–00	13 – 67
6X6–48219–00	18 – 18
703–48219–00	7 – 30
	8 – 30
6X6–48219–10	19 – 20
	20 – 20
6X6–48219–20	19 – 21
	20 – 21
704–48219–B0	9 – 52
704–48219–P0	10 – 49
	11 – 49
703–48220–15	2 – 1
	7 – 1
6X3–48221–00	12 – 55
6X5–48221–00	13 – 26
6X6–48221–00	18 – 3
	19 – 3
	20 – 3
6X7–48221–00	22 – 3
701–48221–00	5 – 6
	6 – 6
703–48221–00	7 – 56
	8 – 56
6X5–48221–10	13 – 27

PART NO. N° PIECES	REF. NO.
704–48221–B0	9 – 62
704–48221–P0	10 – 58
	11 – 67
6X5–48222–00	13 – 31
6X6–48222–00	18 – 4
	19 – 4
	20 – 4
6X7–48222–00	22 – 4
701–48222–00	5 – 27
	6 – 27
703–48222–00	7 – 27
	8 – 27
6X3–48222–01	12 – 48
6X5–48222–10	13 – 33
6X6–48222–10	19 – 6
	20 – 6
703–48222–10	7 – 27
	8 – 27
6X5–48222–20	13 – 66
6X5–48222–30	13 – 85
704–48222–B0	9 – 34
704–48222–P0	10 – 32
	11 – 32
6X0–48223–00	12 – 54
6X7–48223–00	22 – 6
703–48223–00	7 – 28
	8 – 28
6X5–48224–00	13 – 13
6X6–48224–00	18 – 5
	19 – 5
	20 – 5
6X7–48224–00	22 – 5
703–48224–00	7 – 55
	8 – 55
6X6–48224–10	18 – 6
	19 – 7
	20 – 7
6X7–48224–10	22 – 7
6X3–48225–00	12 – 57
6X5–48225–00	13 – 68
6X6–48225–00	19 – 25
	20 – 25
6X7–48225–00	22 – 15
703–48225–00	7 – 29
	8 – 29
6X3–48225–10	12 – 56
6X3–48225–20	9 – 45
	10 – 43

PART NO. N° PIECES	REF. NO.
6X3–48225–20	11 – 43
	12 – 59
703–48226–00	7 – 26
	8 – 26
703–48227–00	7 – 24
	8 – 24
	12 – 49
	22 – 8
6X5–48228–00	13 – 73
6X6–48228–00	18 – 44
	19 – 52
	20 – 52
6X7–48228–00	22 – 25
6X5–48229–00	13 – 30
701–48229–00	5 – 26
	6 – 26
6X5–48229–10	13 – 32
704–48229–B1	9 – 37
704–48229–P1	10 – 35
	11 – 35
704–48229–R0	10 – 35
	11 – 60
703–48230–15	2 – 1
	7 – 1
704–48231–00	10 – 25
	11 – 25
EL8–48231–00	9 – 27
	12 – 26
6X5–48232–00	13 – 2
701–48232–00	5 – 30
	6 – 30
703–48232–00	7 – 62
	8 – 62
EL8–48232–00	9 – 42
704–48232–P1	10 – 40
	11 – 40
6X7–48233–00	22 – 23
704–48233–00	10 – 53
	11 – 53
EL8–48233–00	9 – 56
	12 – 45
6X6–48233–01	18 – 28
	19 – 34
	20 – 34
6X6–48234–00	18 – 36
	19 – 42
	20 – 42
	22 – 37

PART NO. N° PIECES	REF. NO.
701–48234–00	5 – 5
	6 – 5
703–48234–00	7 – 18
	8 – 18
	13 – 20
704–48234–00	10 – 48
	11 – 48
EL8–48234–00	9 – 51
	12 – 43
701–48235–00	5 – 2
	6 – 2
702–48235–00	9 – 57
	12 – 46
703–48235–00	7 – 4
	8 – 4
	13 – 5
704–48235–00	10 – 54
	11 – 54
6X6–48236–00	18 – 31
	19 – 37
	20 – 37
	22 – 34
701–48236–00	5 – 8
	6 – 8
703–48236–00	7 – 16
	8 – 16
	13 – 18
6X6–48237–00	18 – 30
	19 – 36
	20 – 36
	22 – 35
702–48237–00	5 – 9
	6 – 9
6X6–48238–00	18 – 29
	19 – 35
	20 – 35
	22 – 36
702–48238–00	5 – 10
	6 – 10
703–48238–00	7 – 22
	8 – 22
	13 – 24
704–48238–00	9 – 41
	10 – 39
	11 – 39
	12 – 36
6X6–48241–00	18 – 61
	19 – 67

PART NO. N° PIECES	REF. NO.
6X6–48241–00	20 – 67
	22 – 29
EL8–48241–00	10 – 26
	11 – 26
	12 – 27
EL8–48241–10	9 – 28
6X7–48242–00	22 – 24
704–48242–00	9 – 44
6X6–48242–01	18 – 27
	19 – 32
	20 – 32
704–48242–10	10 – 42
	11 – 42
EL8–48242–10	12 – 39
6X6–48242–11	19 – 33
	20 – 33
701–48243–00	5 – 14
	6 – 14
703–48243–00	7 – 15
	8 – 15
	13 – 17
703–48244–00	7 – 21
	8 – 21
	13 – 23
EL8–48244–00	9 – 32
	10 – 30
	11 – 30
	12 – 32
703–48245–00	7 – 11
	8 – 11
EL8–48245–00	9 – 33
	10 – 31
	11 – 31
	12 – 33
6X6–48245–01	18 – 62
	19 – 68
	20 – 68
	22 – 28
6X5–48246–00	13 – 62
701–48246–00	5 – 24
	6 – 24
	9 – 5
	10 – 5
	11 – 5
703–48246–00	7 – 23
	8 – 23
	13 – 74
701–48248–00	5 – 12

PART NO. N° PIECES	REF. NO.
701–48248–00	6 – 12
	7 – 13
	8 – 13
	9 – 40
	10 – 38
	11 – 38
	12 – 35
	13 – 15
701–48249–00	5 – 11
	6 – 11
703–48250–17	2 – 1
	7 – 1
EL8–48251–00	9 – 3
	10 – 3
	11 – 3
	12 – 2
701–48252–00	5 – 4
	6 – 4
703–48252–00	7 – 12
	8 – 12
	13 – 14
EL8–48254–00	10 – 27
	11 – 27
	12 – 28
EL8–48254–10	9 – 29
701–48255–00	5 – 21
	6 – 21
EL8–48259–00	9 – 7
	10 – 7
	11 – 7
	12 – 7
6X0–48261–00	12 – 18
6X5–48261–00	13 – 4
701–48261–00	5 – 37
704–48261–00	9 – 17
	10 – 15
	11 – 15
703–48261–01	8 – 2
701–48261–10	5 – 37
703–48261–11	7 – 2
701–48261–20	6 – 37
6X0–48262–00	12 – 9
704–48262–00	9 – 8
	10 – 8
	11 – 8
702–48263–00	12 – 40
6X0–48264–00	12 – 10
6X5–48264–00	13 – 8

PART NO. N° PIECES	REF. NO.
6X6–48264–00	18 – 39
	19 – 45
	20 – 45
	22 – 30
703–48264–00	7 – 6
	8 – 6
704–48264–00	9 – 9
	10 – 9
	11 – 9
6X0–48265–00	12 – 8
6X5–48265–00	13 – 11
703–48265–00	7 – 9
	8 – 9
704–48265–00	9 – 4
	10 – 4
	11 – 4
701–48266–00	5 – 29
	6 – 29
704–48266–00	9 – 10
	12 – 13
6X5–48267–00	13 – 43
	13 – 83
6X6–48267–00	18 – 37
	19 – 43
	20 – 43
	22 – 31
701–48268–00	5 – 18
	6 – 18
703–48268–00	7 – 5
	8 – 5
	13 – 7
6X5–48271–00	13 – 3
701–48271–00	5 – 34
	6 – 34
703–48271–00	7 – 60
	8 – 60
704–48271–00	10 – 22
	11 – 22
EL8–48271–00	12 – 22
701–48271–10	5 – 34
	6 – 34
EL8–48271–10	9 – 24
703–48272–17	2 – 1
	7 – 1
EL8–48279–00	9 – 49
	10 – 47
	11 – 47
	12 – 41

PART NO. N° PIECES	REF. NO.
701–48280–00	5 – 48
	6 – 48
6X0–48281–00	12 – 62
703–48281–00	7 – 31
	8 – 31
704–48281–00	9 – 15
	10 – 13
	11 – 13
	12 – 70
EL8–48281–00	9 – 13
	10 – 11
	11 – 11
	12 – 16
701–48281–10	5 – 16
	6 – 16
701–48282–00	5 – 28
	6 – 28
703–48282–00	7 – 32
	8 – 32
704–48282–00	9 – 58
701–48283–00	5 – 46
	6 – 46
704–48283–00	9 – 19
	10 – 17
	11 – 17
	19 – 49
	20 – 49
703–48284–00	7 – 52
	8 – 52
704–48284–00	9 – 61
703–48284–10	7 – 52
	8 – 52
704–48284–P0	10 – 57
	11 – 57
704–48285–10	11 – 65
701–48287–00	5 – 44
	6 – 44
	7 – 42
	8 – 42
	12 – 66
	22 – 64
702–48287–00	7 – 64
	8 – 65
704–48287–00	9 – 22
	10 – 20
	11 – 20
	13 – 46
	18 – 40

PART NO. N° PIECES	REF. NO.
704–48287–00	19 – 46
	20 – 46
	22 – 32
6X0–48288–00	12 – 52
702–48288–00	5 – 23
	6 – 23
701–48289–00	5 – 17
	6 – 17
703–48291–10	7 – 39
	8 – 39
6X5–48293–00	13 – 87
703–48293–00	7 – 41
	8 – 41
704–48293–00	3 – 4
703–48293–10	7 – 41
	8 – 41
704–48293–20	3 – 4
704–48293–30	3 – 7
701–48310–10	14 – 1
701–48310–20	14 – 1
701–48310–40	14 – 1
701–48310–60	14 – 1
701–48310–80	14 – 1
701–48310–90	14 – 1
6X5–48317–00	13 – 76
6X5–48317–10	13 – 77
701–48320–00	14 – 1
701–48320–20	14 – 1
701–48320–30	14 – 1
701–48320–40	14 – 1
701–48320–50	14 – 1
701–48320–60	14 – 1
701–48320–70	14 – 1
701–48320–80	14 – 1
701–48320–90	14 – 1
647–48330–50	39 – 10
648–48330–50	42 – 15
617–48331–91	39 – 14
	42 – 19
6X5–48338–00	13 – 78
6X5–48338–10	13 – 79
647–48340–50	39 – 16
648–48340–50	42 – 9
663–48344–00	40 – 8
	44 – 2
	45 – 12
	45 – 14
	46 – 12

PART NO. N° PIECES	REF. NO.
663–48344–00	46 – 16
	47 – 12
	48 – 17
	48 – 29
703–48345–01	5 – 36
	6 – 36
	7 – 19
	8 – 19
	9 – 21
	10 – 19
	11 – 19
	12 – 21
	13 – 21
647–48346–50	39 – 17
648–48346–50	42 – 16
617–48346–90	39 – 11
	42 – 10
701–48350–00	14 – 1
701–48350–10	14 – 1
701–48350–20	14 – 1
701–48350–30	14 – 1
701–48350–40	14 – 1
701–48350–50	14 – 1
701–48350–60	14 – 1
6X5–48351–00	13 – 54
6X5–48354–00	13 – 59
6X5–48358–00	13 – 25
701–48358–00	5 – 38
	6 – 38
703–48358–00	7 – 20
	8 – 20
	9 – 26
	10 – 24
	11 – 24
	12 – 24
617–48361–91	39 – 20
	42 – 13
63V–48501–00	40 – 1
65W–48501–00	47 – 1
6AH–48501–00	46 – 1
6AU–48501–00	45 – 1
6BL–48501–00	48 – 1
66T–48501–01	44 – 1
689–48501–01–4D	42 – 1
655–48501–02	39 – 1
6J8–48501–03–4D	43 – 1
655–48501–10	39 – 1
6J8–48501–11	43 – 1

PART NO. N° PIECES	REF. NO.
6L2–48501–11	41 – 1
689–48501–21–4D	42 – 1
700–48510–12	39 – 22
	42 – 21
	51 – 13
65W–48511–00	44 – 7
	47 – 19
	48 – 7
67F–48511–00	50 – 11
68V–48511–00	50 – 14
6AH–48511–00	50 – 5
6G8–48511–00	51 – 14
6L2–48511–00	49 – 1
63V–48511–01	50 – 1
676–48511–01	49 – 6
689–48511–01	42 – 22
	51 – 9
6J8–48511–01–4D	51 – 8
63D–48511–10	49 – 11
65W–48511–10	50 – 10
676–48511–10	39 – 23
	51 – 1
69G–48511–10	51 – 17
6G8–48511–10	51 – 5
688–48511–11	49 – 12
6J8–48511–51–4D	49 – 5
63V–48531–00	40 – 2
68T–48531–00	45 – 2
6AH–48531–00	46 – 14
6J8–48531–00	43 – 9
6L2–48531–00	41 – 11
689–48531–50	42 – 2
655–48531–51	39 – 2
6AH–48532–00	46 – 7
6J8–48532–00	43 – 10
689–48532–50	42 – 3
63V–48534–00	40 – 18
6J8–48534–00	43 – 3
6L2–48534–01	41 – 3
647–48534–50	39 – 5
648–48534–50–4D	42 – 6
6BL–48538–00	48 – 8
6H3–48538–00	44 – 4
	47 – 14
682–48538–50	40 – 3
	41 – 12
	43 – 11
	45 – 3

NUMERICAL INDEX
INDEX NUMERIQUE

PART NO. N° PIECES	REF. NO.
682–48538–50	46 – 9
63V–48544–00	40 – 20
6J8–48544–01	43 – 4
6L2–48544–01	41 – 2
6E5–61301–01	61 – 1
6E5–61303–00	61 – 5
6E5–61311–11	61 – 3
6E5–61313–00	61 – 2
6E5–61315–00	61 – 4
63D–61350–00	56 – 1
63V–61350–00	52 – 1
65W–61350–00	57 – 1
67F–61350–00	59 – 1
697–61350–00	58 – 1
6AH–61350–00	54 – 1
6BG–61350–00	62 – 1
689–61350–02	55 – 1
6E5–61350–02	60 – 1
688–61350–10	58 – 1
68T–61350–10	53 – 1
63D–61351–00	56 – 2
65W–61351–00	57 – 2
697–61351–00	58 – 2
689–61351–01	55 – 2
6E5–61351–01	60 – 2
688–61351–10	58 – 2
6E5–61355–00	52 – 6
	53 – 6
	54 – 6
	55 – 7
	58 – 8
	60 – 5
6X6–81145–00	18 – 41
	19 – 79
	20 – 78
6X6–81146–00	18 – 72
	19 – 78
	20 – 77
6X1–81870–00	25 – 2
	30 – 2
	32 – 2
68V–81950–00	29 – 8
	31 – 12
704–81950–10	11 – 58
	13 – 72
	18 – 65
	19 – 71
	20 – 71

PART NO. N° PIECES	REF. NO.
704–81950–10	22 – 50
6X3–81971–00	35 – 1
6X3–81971–10	35 – 2
6K1–81980–00	27 – 18
703–82119–00	31 – 11
688–82388–00	35 – 5
6X5–82507–00	31 – 10
6Y8–82507–00	29 – 9
61B–82510–01	28 – 4
6X5–82510–01	31 – 2
6R5–82510–02	24 – 4
6Y8–82510–02	29 – 3
64D–82510–03	33 – 4
703–82510–03	8 – 44
6K1–82510–06	27 – 3
704–82510–07	23 – 4
	26 – 2
	34 – 1
703–82510–12	8 – 44
703–82510–33	7 – 44
	8 – 44
703–82510–43	7 – 44
	8 – 44
6X6–8252S–00	20 – 87
	22 – 54
6X6–8252V–00	18 – 64
	19 – 70
	20 – 70
	22 – 42
703–82531–00	7 – 46
	8 – 46
6K1–82532–00	23 – 6
	26 – 4
	27 – 5
	33 – 6
	34 – 3
6X5–82540–00	13 – 47
6X6–82540–00	18 – 60
	19 – 66
	20 – 66
	22 – 27
703–82540–00	7 – 50
	8 – 50
704–82540–00	12 – 14
6X6–82540–10	19 – 81
	20 – 80
704–82540–20	9 – 11
	10 – 10

PART NO. N° PIECES	REF. NO.
704–82540–30	11 – 10
704–82541–10	12 – 71
703–82542–00	7 – 63
	8 – 63
	8 – 63
	8 – 63
6X6–82545–00	18 – 63
	19 – 69
	20 – 69
6X7–82545–00	22 – 26
6X1–82550–00	25 – 3
	30 – 3
	32 – 3
682–82556–00	5 – 40
	6 – 40
	7 – 48
	8 – 48
	12 – 69
	23 – 8
	24 – 7
	25 – 5
	26 – 6
	27 – 7
	28 – 7
	29 – 6
	30 – 5
	31 – 5
	32 – 5
	33 – 20
	34 – 11
	34 – 13
	35 – 3
6X6–82563–00	18 – 2
	19 – 2
	20 – 2
6X7–82563–00	22 – 2
6X3–82563–01	12 – 51
6X5–82563–01	13 – 48
703–82563–02	7 – 55
	8 – 55
688–82563–10	35 – 4
6X6–82563–10	19 – 26
	20 – 26
6X5–82563–11	13 – 49
703–82563–12	7 – 55
	8 – 55
6X6–82563–20	19 – 80
	20 – 79

PART NO. N° PIECES	REF. NO.
6X5–82563–21	13 – 50
6X6–82563–30	20 – 81
6X5–82563–31	13 – 51
704–82563–41	9 – 36
	10 – 34
704–82563–51	11 – 34
704–82563–H1	11 – 61
704–82563–J1	11 – 64
6X6–82570–00	15 – 3
	25 – 1
6X5–82570–01	17 – 2
	31 – 1
6Y8–82570–02	16 – 2
	29 – 1
61B–82570–03	28 – 1
64D–82570–03	33 – 1
6R5–82570–05	15 – 2
	24 – 1
6K1–82570–08	27 – 1
704–82570–08	23 – 1
64D–82570–10	33 – 16
6X6–82570–10	16 – 3
	30 – 1
64D–82570–20	21 – 2
	33 – 1
6X6–82570–20	17 – 3
	32 – 1
64D–82570–30	33 – 16
6X6–82570–A0	15 – 4
	16 – 4
	17 – 4
	25 – 7
	30 – 7
	31 – 13
	32 – 7
64D–82571–00	33 – 2
6X5–82571–00	31 – 6
6Y8–82571–01	29 – 2
6K1–82571–02	27 – 2
	28 – 2
704–82571–02	23 – 2
	24 – 2
64D–82571–10	33 – 17
64D–82575–00	33 – 19
6K1–82575–00	27 – 6
	28 – 6
	29 – 5
	30 – 4

PART NO. N° PIECES	REF. NO.
6X3–82575–00	12 – 68
6X5–82575–00	31 – 4
6X6–82575–00	32 – 4
6X7–82575–00	22 – 45
688–82575–01	7 – 47
	8 – 47
	23 – 7
	24 – 6
	25 – 4
	26 – 5
	34 – 10
64D–82575–10	33 – 19
	34 – 12
701–82575–53	5 – 39
	6 – 39
676–82577–00	8 – 45
	24 – 5
	28 – 5
	29 – 4
	31 – 3
703–82577–00	7 – 45
	8 – 45
	23 – 5
	26 – 3
	27 – 4
	33 – 5
	34 – 2
6X3–8257B–00	34 – 4
704–8257C–00	26 – 1
689–8257Y–00	5 – 41
	6 – 41
6X6–8257Y–60	18 – 57
64D–82581–00	23 – 9
	24 – 8
	26 – 7
	29 – 10
	33 – 7
	34 – 5
6X5–82581–00	31 – 8
6X6–82581–00	20 – 89
	22 – 56
6X6–82582–30	18 – 55
	19 – 63
	20 – 63
6X6–82582–40	18 – 54
	19 – 62
	20 – 62
6X6–82582–60	18 – 53

PART NO. N° PIECES	REF. NO.
6X6–82582–60	19 – 61
	20 – 61
6X6–82582–B0	18 – 56
	19 – 64
	20 – 64
6X6–82584–00	20 – 88
	22 – 55
6X6–82585–20	18 – 52
	19 – 60
	20 – 60
	22 – 47
688–82586–11	36 – 6
688–82586–21	7 – 49
	8 – 49
688–82586–31	36 – 6
688–82586–50	36 – 1
64D–82588–00	33 – 3
61B–82588–01	28 – 3
6R5–82588–01	23 – 3
	24 – 3
64D–82588–10	33 – 18
703–8258A–00	36 – 3
61B–8258A–01	36 – 2
688–8258A–10	36 – 7
6X6–8258A–10	37 – 1
688–8258A–20	7 – 49
	8 – 49
	36 – 5
6X6–8258A–20	37 – 1
688–8258A–30	36 – 7
6X6–8258A–30	37 – 1
6K1–8258A–40	36 – 2
6X6–8258A–40	37 – 1
688–8258A–50	36 – 2
688–8258A–60	36 – 2
6X6–8258A–A0	37 – 2
6X6–8258A–B0	37 – 3
6X6–8258A–C0	37 – 2
6X6–8258A–D0	37 – 3
6X5–82590–00	13 – 82
6X6–82590–00	18 – 51
6X7–82590–00	22 – 48
6X6–82590–10	19 – 59
6X7–82590–10	22 – 46
704–82590–10	11 – 59
6X6–82590–20	18 – 51
	38 – 2
6X6–82590–30	19 – 59

PART NO. N° PIECES	REF. NO.
6X6–82590–30	38 – 2
6X7–82590–30	37 – 4
6X6–82590–50	18 – 51
6X6–82590–60	19 – 59
6X6–82590–80	20 – 59
6X6–82590–90	20 – 59
6X6–82591–00	20 – 86
	22 – 53
703–82591–00	7 – 53
	7 – 53
	8 – 53
	8 – 53
	13 – 52
	18 – 47
	18 – 47
	19 – 55
	19 – 55
	20 – 55
	22 – 41
	38 – 3
	38 – 3
703–82592–00	7 – 54
	8 – 54
701–82594–00	5 – 47
	6 – 47
703–82594–00	7 – 25
	8 – 25
704–82594–00	9 – 35
	10 – 33
	11 – 33
6X6–8259E–00	18 – 19
	19 – 22
	20 – 22
6X7–8259E–00	22 – 21
6X6–8259F–00	20 – 82
6R5–83383–00	24 – 12
	25 – 6
	28 – 12
	29 – 7
	30 – 6
	32 – 6
	34 – 9
6X4–83383–00	31 – 9
6X5–83383–00	31 – 7
703–83383–02	7 – 51
	8 – 51
688–83383–11	23 – 13
	26 – 11

PART NO. N° PIECES	REF. NO.
688–83383–11	27 – 12
	33 – 11
703–83383–B0	8 – 51
6K1–83614–01	27 – 8
	28 – 8
6AH–83773–00	46 – 5
6X6–84301–00	18 – 15
6X7–84301–00	22 – 22
6X6–84301–12	19 – 14
6X6–84301–22	20 – 14
6D5–84340–00	46 – 19
	48 – 31
6X6–85557–00	20 – 85
	22 – 52
6X6–85590–00	18 – 45
	19 – 53
	20 – 53
	38 – 1
	38 – 1
6X6–85590–10	18 – 45
	19 – 53
	22 – 49
704–85721–00	36 – 4
61B–85830–00	28 – 13
6K1–85830–01	27 – 13
60R–G4111–10	45 – 8
60R–G8501–00	45 – 1
90101–09M01	56 – 7
	57 – 7
	59 – 7
	62 – 6
90101–09M70	61 – 9
90105–06M23	41 – 14
90109–06M29	43 – 13
90109–06M86	46 – 15
90116–10175	50 – 12
	50 – 15
90149–05M05	23 – 14
	24 – 13
	27 – 19
	28 – 18
	33 – 12
	33 – 21
90159–05M25	40 – 21
90170–09M03	52 – 4
	53 – 4
	54 – 4
	55 – 5

PART NO. N° PIECES	REF. NO.
90170–09M03	56 – 5
	57 – 5
	58 – 5
	59 – 4
	62 – 4
90170–09M05	61 – 10
90170–14M06	61 – 6
90179–06M24	43 – 14
90185–08057	50 – 4
	50 – 8
	51 – 20
90185–09M01	52 – 3
	53 – 3
	54 – 3
	55 – 4
	56 – 4
	57 – 4
	58 – 4
	59 – 3
	60 – 6
	61 – 11
	62 – 3
90185–10051	39 – 26
	42 – 25
	48 – 6
	49 – 2
	50 – 13
	50 – 16
	51 – 4
	51 – 12
90201–04M06	40 – 16
90201–05M06	47 – 9
	48 – 14
90201–06M31	47 – 6
	48 – 11
	48 – 26
90201–08M12	40 – 10
90201–10120	44 – 8
	47 – 20
90201–10M02	40 – 14
90201–10M20	52 – 2
	53 – 2
	54 – 2
	55 – 3
	56 – 3
	57 – 3
	58 – 3
	59 – 2

PART NO. N° PIECES	REF. NO.
90201–10M20	60 – 7
	62 – 2
90201–10M63	52 – 7
	53 – 7
	54 – 7
	55 – 8
	56 – 8
	57 – 8
	58 – 7
	59 – 6
	62 – 7
90201–10M76	61 – 8
90202–05088	41 – 9
90206–10M04	40 – 13
90254–03M03	43 – 6
90254–03M04	44 – 5
90254–03M05	47 – 3
90386–10009	40 – 22
	41 – 4
90386–10025	40 – 12
90387–06139	48 – 23
90387–06M29	47 – 5
90387–06M86	48 – 10
90387–10M42	52 – 5
	53 – 5
	54 – 5
	55 – 6
	56 – 6
	57 – 6
	58 – 6
	59 – 5
	62 – 5
90387–10M61	60 – 3
90446–09M42	48 – 32
90465–11M10	46 – 3
90465–13M18	46 – 18
90468–10005	47 – 10
	48 – 15
90468–18001	48 – 16
90468–18008	40 – 9
	44 – 3
	45 – 13
	45 – 15
	46 – 13
	46 – 17
	47 – 11
	47 – 13
	48 – 18

PART NO. N° PIECES	REF. NO.
90468–18008	48 – 30
90480–19031	46 – 8
90501–10071	39 – 13
	42 – 18
90501–10264	39 – 19
	42 – 12
90508–20040	48 – 20
90560–12M01	60 – 4
91490–20010	40 – 17
	41 – 10
91690–30012	39 – 15
	39 – 21
	40 – 4
	41 – 13
	42 – 14
	42 – 20
	43 – 12
	45 – 4
	46 – 10
92780–06020	9 – 30
	10 – 28
	11 – 28
	12 – 29
92780–06025	5 – 20
	6 – 20
92903–05100	23 – 11
	24 – 10
	24 – 15
	26 – 9
	29 – 12
	33 – 9
	34 – 7
92903–05600	24 – 16
92990–05100	23 – 16
	27 – 10
	27 – 21
	28 – 10
	28 – 20
	33 – 14
	33 – 23
92990–05200	13 – 84
	18 – 20
	19 – 23
	20 – 23
	22 – 60
92990–05300	9 – 38
	10 – 36
	11 – 36

PART NO. N° PIECES	REF. NO.
92990–05300	12 – 61
	13 – 70
	18 – 8
	19 – 9
	20 – 9
92990–05600	23 – 17
	27 – 22
	28 – 21
	33 – 15
	33 – 24
92990–06100	27 – 16
	28 – 16
92990–06300	5 – 25
	6 – 25
	9 – 48
	10 – 46
	11 – 46
92990–06600	27 – 17
	28 – 17
92990–08100	43 – 2
92990–08200	13 – 38
92990–08600	7 – 34
	8 – 34
	13 – 69
	18 – 10
	19 – 11
	20 – 11
	22 – 10
	39 – 12
	39 – 18
	42 – 11
	42 – 17
92990–10100	49 – 8
92990–10600	12 – 6
	39 – 25
	42 – 24
	49 – 3
	49 – 9
	51 – 3
	51 – 11
92995–05600	39 – 7
	45 – 11
92995–06600	39 – 4
	40 – 6
	42 – 5
	42 – 8
	45 – 6
	51 – 7

NUMERICAL INDEX
INDEX NUMERIQUE

PART NO. N° PIECES	REF. NO.
92995–06600	51 – 16
92995–08600	50 – 3
	50 – 7
	51 – 19
92D80–05016	18 – 23
	19 – 28
	20 – 28
93210–12327	45 – 9
93210–16275	52 – 9
	53 – 9
	54 – 9
	55 – 10
	56 – 10
	57 – 10
	58 – 10
	59 – 9
	60 – 9
	62 – 9
93430–06024	5 – 35
	6 – 35
	7 – 10
	8 – 10
	9 – 6
	10 – 6
	11 – 6
	12 – 5
	13 – 12
93700–06M03	48 – 5
95303–05600	24 – 14
95303–05700	23 – 12
	24 – 11
	26 – 10
	29 – 13
	33 – 10
	34 – 8
95380–05600	7 – 7
	8 – 7
	9 – 23
	10 – 21
	11 – 21
	13 – 9
	18 – 50
	19 – 58
	20 – 58
	23 – 15
	27 – 11
	27 – 20
	28 – 11

PART NO. N° PIECES	REF. NO.
95380–05600	28 – 19
	33 – 13
	33 – 22
95380–06600	5 – 45
	6 – 45
	7 – 40
	8 – 40
	9 – 39
	10 – 37
	11 – 37
	12 – 12
	13 – 75
	27 – 15
	28 – 15
	39 – 9
	40 – 7
	45 – 7
95380–10600	49 – 10
95380–14700	61 – 7
95780–06300	13 – 44
95780–08300	40 – 19
	41 – 5
97075–08035	50 – 2
	51 – 18
97075–10040	39 – 24
	42 – 23
	49 – 4
	49 – 7
	51 – 2
	51 – 10
97090–06045	39 – 8
97095–05016	45 – 10
97095–05020	39 – 6
97095–06012	42 – 7
	45 – 5
97095–06016	40 – 5
	42 – 4
	51 – 6
	51 – 15
97095–06018	39 – 3
97095–06025	48 – 28
97095–06065	48 – 27
97095–08025	50 – 6
97303–05012	23 – 10
	24 – 9
	26 – 8
	29 – 11
	33 – 8

PART NO. N° PIECES	REF. NO.
97303–05012	34 – 6
97380–05025	7 – 8
	8 – 8
	13 – 10
97380–06018	9 – 20
	10 – 18
	11 – 18
	12 – 20
97380–08030	7 – 33
	8 – 33
	13 – 37
97390–06018	5 – 22
	6 – 22
97595–06514	46 – 11
97595–06525	47 – 7
97595–06530	46 – 6
97595–06535	48 – 12
97780–05130	13 – 57
97780–06230	22 – 62
97780–40116	35 – 6
97780–50145	3 – 6
	3 – 9
	18 – 48
	19 – 56
	20 – 56
97890–05016	9 – 65
	10 – 62
	10 – 62
	11 – 70
	12 – 3
97890–05025	9 – 16
	10 – 14
	11 – 14
	12 – 17
97890–06018	9 – 47
	10 – 45
	11 – 45
97890–06035	12 – 64
98580–03015	7 – 38
	8 – 38
	12 – 15
	13 – 42
98580–04006	7 – 36
	8 – 36
	12 – 31
	13 – 40
98580–04010	7 – 35
	7 – 35

PART NO. N° PIECES	REF. NO.
98580–04010	8 – 35
	8 – 35
	18 – 22
	19 – 27
	20 – 27
98580–05008	12 – 50
98580–05010	5 – 32
	6 – 32
	7 – 37
	8 – 37
	13 – 55
98580–05012	13 – 56
	13 – 86
98580–05014	18 – 7
	19 – 8
	20 – 8
	22 – 59
98580–05020	5 – 43
	6 – 43
98580–05025	19 – 47
	20 – 47
	22 – 58
98580–05040	13 – 57
98580–05060	3 – 5
	3 – 8
	18 – 49
	19 – 57
	20 – 57
98780–04010	13 – 45
98780–05010	20 – 84
98780–05014	18 – 42
	19 – 50
	20 – 50
98780–05018	9 – 31
	10 – 29
	11 – 29
98780–06035	22 – 61
98980–05010	27 – 9
	28 – 9
98980–06020	27 – 14
	28 – 14

PART NO. N° PIECES	REF. NO.

PART NO. N° PIECES	REF. NO.