YAMAHA

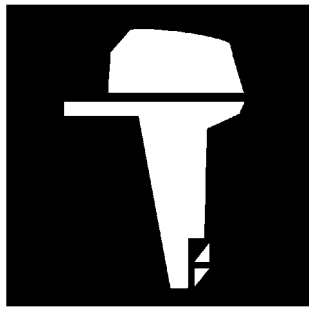

PARTS CATALOGUE

RIGGING-REMOCON

1H601-10RE1

( )

YAMAHA GENUINE Parts & Accessories

2009/10/1

NEWS NO.	DATE	COMMENT
PE0-OM-090045	Oct.,1,2009	MOD:FIG.37 EXTENSION, WIRE HARNESS ADDITION

RIGGING-REMOCON
PARTS CATALOGUE
©2009 by Yamaha Motor Co., Ltd.
1st edition, April 2009
All rights reserved.
Any reprinting or unauthorized use
without the written permission of
Yamaha Motor Co., Ltd.
is expressly prohibited.
Printed in Japan.

FOREWORD

This Parts Catalogue is related to the parts for the model(s) on the cover page. When you are ordering replacement parts, please refer to this Parts Catalogue and quote both part numbers and part names correctly.

1. Modifications or additions which have been made after the issue of the Parts Catalogue will be announced in the Parts News.
   It is advisable that you make the necessary corrections to the Parts Catalogue according to the Parts News.

2. Abbreviations
   The following abbreviations are used in this Parts Catalogue.

   “UR” Use specified parts number.
   “UN” Use as many as needed.
   “AP” Alternate Parts
   “LM” Locally Made (Parts need to be ordered locally)
   “F#” Frame No. (Applicable machine No.)
   “O/S” Over Size

3. The number of components for assembly
   - Parts, which are to be supplied in an assembly, are listed with a dot (.) in front of the part name as shown below.
   - The numeral appearing to the right of each component part indicates the quantity of parts for each assembly unit.

PART NO.	DESCRIPTION	Q’TY	REMARKS
2F5–83310–60	FRONT FLASHER LIGHT ASSY	2	
115–83311–60	.BULB (6V–18W)	1	

4. Applicable colours of graphics are represented in the “REMARKS” as shown below.

PART NO.	DESCRIPTION	Q’TY	REMARKS
2N4–24110–00–X5	FUEL TANK COMP.	2	MXR
3J1–24240–10	.GRAPHIC, FUEL TANK	1	FOR MXR

5. Note that the illustrations for reference in finding parts numbers are not to be used for assembling. When assembling, please use the applicable service manual.

6. The asterisk (*) before a reference number indicates modified items after the first edition.

CONTENTS

REMOTE CONTROL BOX 1 1
REMOTE CONTROL BOX 2 2
REMOTE CONTROL BOX 3 3
REMOTE CONTROL BOX 4 4
REMOTE CONTROL ASSY 1 5
REMOTE CONTROL ASSY 2 8
REMOTE CONTROL ASSY 3 10
REMOTE CONTROL ASSY 4 13
REMOTE CONTROL ASSY 5 17
REMOTE CONTROL ASSY 6 20
REMOTE CONTROL ASSY 7 23
REMOTE CONTROL ASSY 8 26
REMOTE CONTROL ASSY 9 29
REMOTE CONTROL CABLES 33
LAYOUT CHART 1 (SINGLE) 34
LAYOUT CHART 2 (TWIN) 35
LAYOUT CHART 3 (TRIPLE) 36
DBW REMOTE CONTROL 1 (SINGLE) 37
DBW REMOTE CONTROL 2 (TWIN) 40
DBW REMOTE CONTROL 3 (TRIPLE) 44
LAYOUT CHART 4 (6X7) 48
DBW REMOTE CONTROL 4 (6X7) 49
SWITCH & PANEL 1 52
SWITCH & PANEL 2 53
SWITCH & PANEL 3 54
SWITCH & PANEL 4 55
SWITCH & PANEL 5 56
SWITCH & PANEL 6 57
SWITCH & PANEL 7 58
SWITCH & PANEL 8 59
SWITCH & PANEL 9 60
SWITCH & PANEL 10 61
SWITCH & PANEL 11 62
SWITCH & PANEL 12 63
SWITCH & PANEL 13 64
WIRE HARNESS 1 65
WIRE HARNESS 2 66
ELECTRICAL DBW REMOTE CONTROL 67
REMO CON ATTACHMENT 1 68
REMO CON ATTACHMENT 2 69
REMO CON ATTACHMENT 3 70
REMO CON ATTACHMENT 4 71
REMO CON ATTACHMENT 5 72
REMO CON ATTACHMENT 6 73
REMO CON ATTACHMENT 7 74
REMO CON ATTACHMENT 8 75
REMO CON ATTACHMENT 9 76
REMO CON ATTACHMENT 10 77
STEERING HOOK 1 79
STEERING HOOK 2 80
STEERING HOOK 3 81
STEERING GUIDE 1 82
STEERING GUIDE 2 83
STEERING GUIDE 3 84
STEERING GUIDE 4 85
STEERING GUIDE 5 86
STEERING GUIDE 6 87
STEERING GUIDE 7 88
STEERING GUIDE 8 89
STEERING GUIDE 9 90
STEERING GUIDE 10 91
STEERING GUIDE 11 92

INDEX

NUMERICAL INDEX 93

REMOTE CONTROL BOX SPECIFICATION LIST (701 TYPE)

TYPE : 701	MECHANICAL SPECIFICATION									
PART NO.	LIST UP SEC.	THROTTLE MOTION		HANDLE POSITION		NEUTRAL LOCK	TIGHTENING		LEVER TYPE	
	FIG.NO-REF.NO.	PULL	PUSH	RIGHT	LEFT		BOLT,NUT	ROUND WOOD SCREW	SINGLE	TWIN
701-48101-23	1-1	○	*	○	*	*	○	*	○	*
701-48101-51		○	*	○	*	*	*	○	○	*
701-48101-G1		○	*	○	*	○	○	*	○	*
701-48102-23		○	*	*	○	*	○	*	○	*
701-48102-51		○	*	*	○	*	○	*	○	*
701-48102-G1		○	*	*	○	○	○	*	○	*
701-48130-23		*	○	○	*	*	○	*	○	*
701-48130-E0		*	○	○	*	○	○	*	○	*
701-48140-E0		*	○	*	○	○	○	*	○	*

REMOTE CONTROL BOX SPECIFICATION LIST (701 TYPE)

TYPE : 701	ELECTRICAL SPECIFICATION								
PART NO.	ENGINE STOP SW.		MAIN SWITCH		PT/T SW.	WIRE HARNESS COUPLER TYPE	BUZZER		NEUTRAL SW.
	PULL PLATE	PUSH BUTTON	CHOKE MODEL	PRIME START MODEL			ANALOG	DIGITAL	
701-48101-23	701-82575-53	*	*	*	*	*	*	*	*
701-48101-51	*	*	*	*	*	*	*	*	*
701-48101-G1	*	*	*	*	*	*	*	*	*
701-48102-23	701-82575-53	*	*	*	*	*	*	*	*
701-48102-51	*	*	*	*	*	*	*	*	*
701-48102-G1	*	*	*	*	*	*	*	*	*
701-48130-23	701-82575-53	*	*	*	*	*	*	*	*
701-48130-E0	701-82575-53	*	*	*	*	*	*	*	*
701-48140-E0	701-82575-53	*	*	*	*	*	*	*	*

701 REMOTE CONTROL

Part No.	Throttle		Lanyard stop S/W	N-lock	Mount		Remarks
	Push	Pull			R	L	
701-48101-23		1	1		1		
701-48101-51		1			1		
701-48101-G1		1		1	1		
701-48102-23		1	1			1	
701-48102-51		1				1	
701-48102-G1		1		1		1	
701-48130-23	1		1		1		
701-48130-E0	1		1	1	1		
701-48140-E0	1		1	1		1	

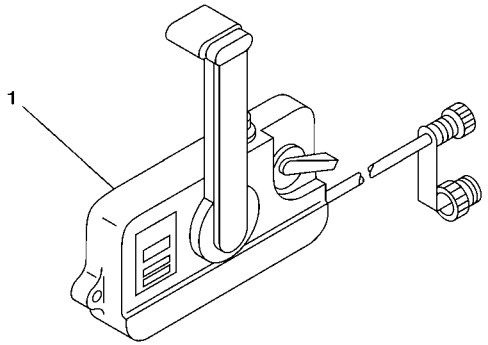

6011100-G010

FIG. 1 REMOTE CONTROL BOX 1

REF. NO.	PART NO.	DESCRIPTION	601R					REMARKS
1	701–48101–23	REMOTE CONTROL ASSY (RIGHT)	1					UR
	701–48101–51	REMOTE CONTROL ASSY (RIGHT)	1					UR
	701–48101–G1	REMOTE CONTROL ASSY (RIGHT)	1					UR
	701–48102–23	REMOTE CONTROL ASSY (LEFT)	1					UR
	701–48102–51	REMOTE CONTROL ASSY (LEFT)	1					UR
	701–48102–G1	REMOTE CONTROL ASSY (LEFT)	1					UR
	701–48130–23	REMOTE CONTROL ASSY (RIGHT)	1					UR
	701–48130–E0	REMOTE CONTROL ASSY (RIGHT)	1					UR
	701–48140–E0	REMOTE CONTROL ASSY (LEFT)	1					UR

REMOTE CONTROL BOX SPECIFICATION LIST (703 TYPE)

TYPE : 703	MECHANICAL SPECIFICATION										
PART NO.	LIST UP SEC.	THROTTLE MOTION		HANDLE POSITION		NEUTRAL LOCK	TIGHTENING		LEVER TYPE	
	FIG.NO-REF.NO.	PULL	PUSH	RIGHT	LEFT		BOLT,NUT	ROUND WOOD SCREW	SINGLE	TWIN
703-48204-13	2-1	○	*	*	○	○	○	*	○	*
703-48210-16		○	*	○	*	○	○	*	○	*
703-48220-15		○	*	○	*	○	○	*	*	○
703-48230-15		○	*	○	*	○	○	*	○	*
703-48250-17		○	*	○	*	○	○	*	○	*
703-48272-17		○	*	○	*	○	○	*	○	*
703-48201-16		*	○	○	*	○	○	*	○	*
703-48201-A3		*	○	○	*	○	○	*	○	*
703-48202-15		*	○	○	*	○	○	*	*	○
703-48203-15		*	○	○	*	○	○	*	○	*
703-48203-A3		*	○	○	*	○	○	*	○	*
703-48205-17		*	○	○	*	○	○	*	○	*
703-48205-A5		*	○	○	*	○	○	*	○	*
703-48207-17		*	○	○	*	○	○	*	○	*
703-48207-A5		*	○	○	*	○	○	*	○	*
703-48208-A4		*	○	○	*	○	○	*	*	○

REMOTE CONTROL BOX SPECIFICATION LIST (703 TYPE)

TYPE : 703	ELECTRICAL SPECIFICATION								
PART NO.	ENGINE STOP SW.		MAIN SWITCH		PT/T SW.	WIRE HARNESS COUPLER TYPE	BUZZER		NEUTRAL SW.
	PULL PLATE	PUSH BUTTON	CHOKE MODEL	PRIME START MODEL			ANALOG	DIGITAL	
703-48204-13	688-82575-01	*	705-82510-33	*	*	7P	703-83383-02	*	703-82540-00
703-48210-16	688-82575-01	*	703-82510-43	*	*	10P	703-83383-02	*	703-82540-00
703-48220-15	688-82575-01	*	703-82510-33	*	*	7P	703-83383-02	*	703-82540-00
703-48230-15	688-82575-01	*	703-82510-33	*	*	7P	703-83383-02	*	703-82540-00
703-48250-17	688-82575-01	*	703-82510-43	*	703-82563-02	10P	703-83383-02	*	703-82540-00
703-48272-17	688-82575-01	*	703-82510-43	*	703-82563-12	10P	703-83383-02	*	703-82540-00
703-48201-16	688-82575-01	*	703-82510-43	*	*	10P	703-83383-02	*	703-82540-00
703-48201-A3	688-82575-01	*	*	703-82510-12	*	10P	*	703-83383-B0	703-82540-00
703-48202-15	688-82575-01	*	703-82510-33	*	*	7P	703-83383-02	*	703-82540-00
703-48203-15	688-82575-01	*	703-82510-33	*	*	7P	703-83383-02	*	703-82540-00
703-48203-A3	688-82575-01	*	*	703-82510-03	*	7P	*	703-83383-B0	703-82540-00
703-48205-17	688-82575-01	*	703-82510-43	*	703-82563-02	10P	703-83383-02	*	703-82540-00
703-48205-A5	688-82575-01	*	*	703-82510-12	703-82563-02	10P	*	703-83383-B0	703-82540-00
703-48207-17	688-82575-01	*	703-82510-43	*	703-82563-12	10P	703-83383-02	*	703-82540-00
703-48207-A5	688-82575-01	*	*	703-82510-12	703-82563-12	10P	*	703-83383-B0	703-82540-00
703-48208-A4	688-82575-01	*	*	703-82510-12	*	10P	*	703-83383-B0	703-82540-00

703 REMOTE CONTROL

Part No.	Throttle		Choke	PT/T	Wire-harness		Mount		Remarks
	Push	Pull			7pin	10pin	R	L	
703-48204-13		1	1		1			1	
703-48210-16		1	1			1	1		
703-48220-15		1	1		1		1		For Twin-application
703-48230-15		1	1		1		1		For analog gauge only
703-48250-17		1	1	1		1	1		
703-48272-17		1	1	1		1	1		For additional tilt switch
703-48201-16	1		1			1	1		
703-48201-A3	1					1	1		
703-48202-15	1		1		1		1		For Twin-application
703-48203-15	1		1		1		1		
703-48203-A3	1				1		1		For analog gauge only
703-48205-17	1		1	1		1	1		
703-48205-A5	1			1		1	1		
703-48207-17	1		1	1		1	1		For additional tilt switch
703-48207-A5	1			1		1	1		
703-48208-A4	1					1	1		For Twin-application

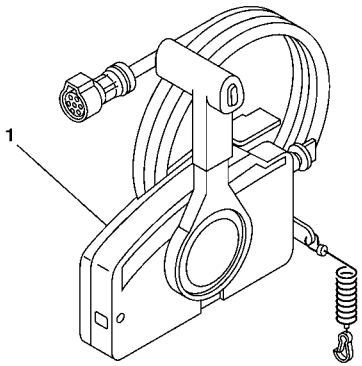

601R10R-H020

FIG. 2 REMOTE CONTROL BOX 2

REF. NO.	PART NO.	DESCRIPTION	601R					REMARKS
1	703–48204–13	REMOTE CONTROL ASSY (7P)	1					UR WITHOUT PT/T SW.
	703–48210–16	REMOTE CONTROL ASSY (10P)	1					UR WITHOUT PT/T SW.
	703–48220–15	REMOTE CONTROL ASSY (7P)	1					UR FOR TWIN
	703–48230–15	REMOTE CONTROL ASSY (7P)	1					UR WITHOUT PT/T SW.
	703–48250–17	REMOTE CONTROL ASSY (10P)	1					UR WITH PT/T SW.
	703–48272–17	REMOTE CONTROL ASSY (10P)	1					UR WITH PT/T SW.
	703–48201–16	REMOTE CONTROL ASSY (10P)	1					UR WITHOUT PT/T SW.
	703–48201–A3	REMOTE CONTROL ASSY (10P)	1					UR WITHOUT PT/T SW.
	703–48202–15	REMOTE CONTROL ASSY (7P)	1					UR FOR TWIN
	703–48203–15	REMOTE CONTROL ASSY (7P)	1					UR WITHOUT PT/T SW.
	703–48203–A3	REMOTE CONTROL ASSY (7P)	1					UR WITHOUT PT/T SW.
	703–48205–17	REMOTE CONTROL ASSY (10P)	1					UR WITH PT/T SW.
	703–48205–A5	REMOTE CONTROL ASSY (10P)	1					UR WITH PT/T SW.
	703–48207–17	REMOTE CONTROL ASSY (10P)	1					UR WITH PT/T SW.
	703–48207–A5	REMOTE CONTROL ASSY (10P)	1					UR WITH PT/T SW.
	703–48208–A4	REMOTE CONTROL ASSY (10P)	1					UR FOR TWIN

REMOTE CONTROL BOX SPECIFICATION LIST (704 TYPE)

TYPE : 704	MECHANICAL SPECIFICATION								
TYPE : 704 (SINGLE)	LIST UP SEC.	HANDLE POSITION		SHIFT MOTION		THROTTLE MOTION		LEVER TYPE	
PART NO.	FIG.NO.-REF.NO.	RIGHT	LEFT	PULL	PUSH	PULL	PUSH	SINGLE	TWIN
704-48205-B1	3-1	*	○	○	*	*	○	○	*
704-48203-P1	3-2	*	○	○	*	*	○	○	*
704-48205-P1		*	○	○	*	*	○	○	*
704-48206-P1		○	*	○	*	*	○	○	*
TYPE : 704 (TWIN)	LIST UP SEC.	HANDLE POSITION		SHIFT MOTION		THROTTLE MOTION		LEVER TYPE	
PART NO.	FIG.NO.-REF.NO.	RIGHT	LEFT	PULL	PUSH	PULL	PUSH	SINGLE	TWIN
704-48207-P1	3-3	*	*	○	*	*	○	*	○

REMOTE CONTROL BOX SPECIFICATION LIST (704 TYPE)

TYPE : 704	ELECTRICAL SPECIFICATION					
TYPE : 704 (SINGLE)	PT/T SW.			NEUTRAL SW.	CABLE TERMINAL	
PART NO.	BODY SW.	BODY SW.	GRIP SW.		MM	INCH
704-48205-B1	*	*	704-82563-41	704-82540-20	*	○
704-48203-P1	*	*	*	704-82540-20	*	○
704-48205-P1	*	*	704-82563-41	704-82540-20	*	○
704-48206-P1	*	*	704-82563-41	704-82540-20	*	○
TYPE : 704 (TWIN)	PT/T SW.			NEUTRAL SW.	CABLE TERMINAL	
PART NO.	BODY SW.	BODY SW.	GRIP SW.		MM	INCH
704-48207-P1	704-82563-H1	704-82563-J1	704-82563-51	704-82540-30	*	○

704 REMOTE CONTROL

Part No.	Throttle		PTT	Lever			Remarks
	Push	Pull		R	L	Twin	
704-48205-B1	1		1		1		Standard
704-48203-P1	1				1		Premium
704-48205-P1	1		1		1		Premium
704-48206-P1	1		1	1			Premium
704-48207-P1	1		1			1	Premium

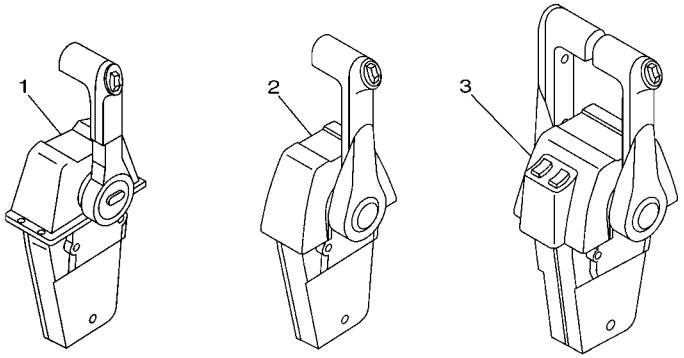

Standard single　　Premium single　　Premium twin

Part No.	Remarks
704-48293-00	For Single lever, Standard
704-48293-20	For Single lever, Premium
704-48293-30	For Twin lever, Premium

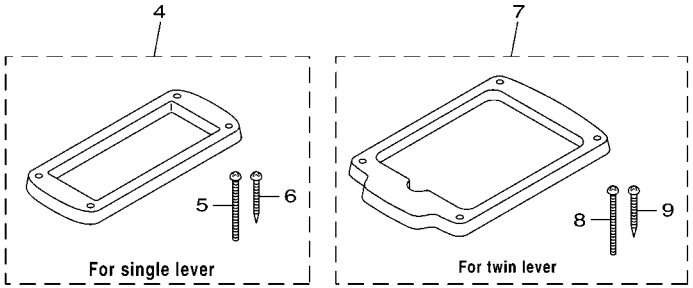

6011100-G030

FIG. 3 REMOTE CONTROL BOX 3

REF. NO.	PART NO.	DESCRIPTION	601R					REMARKS
1	704–48205–B1	REMOTE CONTROL ASSY	1					WITH PT/T SW.
2	704–48203–P1	REMOTE CONTROL ASSY (RIGHT)	1					UR WITHOUT PT/T SW.
	704–48205–P1	REMOTE CONTROL ASSY (RIGHT)	1					UR WITH PT/T SW.
	704–48206–P1	REMOTE CONTROL ASSY (LEFT)	1					UR WITH PT/T SW.
3	704–48207–P1	REMOTE CONTROL ASSY	1					WITH PT/T SW.
4	704–48293–00	SPACER, REMOTE CONTROL	1					UR FOR SINGLE
	704–48293–20	SPACER, REMOTE CONTROL	1					UR FOR SINGLE
5	98580–05060	.SCREW, PAN HEAD	4					
6	97780–50145	.SCREW, TAPPING	4					
7	704–48293–30	SPACER, REMOTE CONTROL	1					FOR TWIN
8	98580–05060	.SCREW, PAN HEAD	4					
9	97780–50145	.SCREW, TAPPING	4					

REMOTE CONTROL BOX SPECIFICATION LIST (6X3/6X5 TYPE)

SIDE MOUNT	MECHANICAL SPECIFICATION									
TYPE : 6X3 (SINGLE)	LIST UP SEC.	HANDLE POSITION		SHIFT MOTION		THROTTLE MOTION		LEVER TYPE		
PART NO.	FIG.NO.-REF.NO.	RIGHT	LEFT	PULL	PUSH	PULL	PUSH	SINGLE	TWIN	TRIPLE
6X3-48206-01	4-1	○	*	○	*	*	○	○	*	*

TOP MOUNT	MECHANICAL SPECIFICATION									
TYPE : 6X5	LIST UP SEC.	HANDLE POSITION		SHIFT MOTION		THROTTLE MOTION		LEVER TYPE		
PART NO.	FIG.NO.-REF.NO.	RIGHT	LEFT	PULL	PUSH	PULL	PUSH	SINGLE	TWIN	TRIPLE
6X5-48207-01	4-2	○	*	*	○	○	*	*	*	○

REMOTE CONTROL BOX SPECIFICATION LIST (6X3/6X5 TYPE)

SIDE MOUNT	ELECTRICAL SPECIFICATION						
TYPE : 6X3 (SINGLE)	PT/T SW.				NEUTRAL SW.	CABLE TERMINAL	
PART NO.	BODY SW.	BODY SW.	BODY SW.	GRIP SW.		MM	INCH
6X3-48206-01	*	*	*	6X3-82563-01	704-82540-00	*	○
TOP MOUNT	ELECTRICAL SPECIFICATION						
TYPE : 6X5	PT/T SW.				NEUTRAL SW.	CABLE TERMINAL	
PART NO.	BODY SW.	BODY SW.	BODY SW.	GRIP SW.		MM	INCH
6X5-48207-01	6X5-82563-11	6X5-82563-21	6X5-82563-31	6X5-82563-01	6X5-82540-00	*	○

6X3 REMOTE CONTROL

Part No.	Throttle		PTT	Mount		Remarks
	Push	Pull		R	L	
6X3-48206-01	1		1	1		With emergency shut-off cord

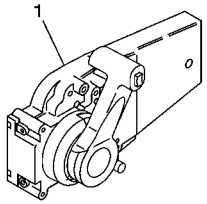

6X5 REMOTE CONTROL

Part No.	Throttle		PTT	Mount		Remarks
	Push	Pull		R	L	
6X5-48207-01	1		1	1		Triple

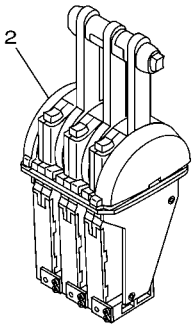

601R10R-H040

FIG. 4 REMOTE CONTROL BOX 4

REF. NO.	PART NO.	DESCRIPTION	601R					REMARKS
1	6X3–48206–01	REMOTE CONTROL ASSY	1					WITH PT/T SW.
2	6X5–48207–01	REMOTE CONTROL ASSY	1					WITH PT/T SW.

701 REMOTE CONTROL (PULL TO OPEN TYPE)

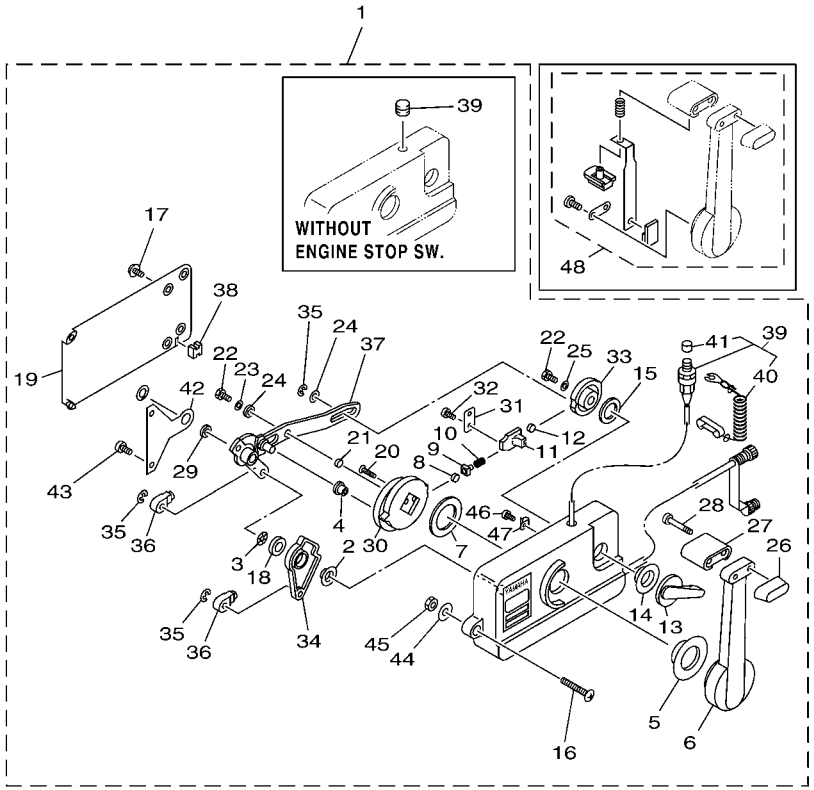

*1 : FOR 701-48101-23/ 701-48102-23
*2 : FOR 701-48101-51/ 701-48101-G1/ 701-48102-51/ 701-48102-G1
*3 : FOR 701-48101-G1/ 701-48102-G1

6011100-G050

FIG. 5 REMOTE CONTROL ASSY 1

REF. NO.	PART NO.	DESCRIPTION	601R					REMARKS
1	701–48101–23	REMOTE CONTROL ASSY (RIGHT)	1					UR
	701–48101–51	REMOTE CONTROL ASSY (RIGHT)	1					UR
	701–48101–G1	REMOTE CONTROL ASSY (RIGHT)	1					UR
	701–48102–23	REMOTE CONTROL ASSY (LEFT)	1					UR
	701–48102–51	REMOTE CONTROL ASSY (LEFT)	1					UR
	701–48102–G1	REMOTE CONTROL ASSY (LEFT)	1					UR
2	701–48235–00	.BUSHING	1					
3	701–48197–10	.WASHER, WAVE	1					
4	701–48252–00	.ROLLER, CAM	1					
5	701–48234–00	.BUSHING 1	1					
6	701–48221–00	.LEVER, CONTROL	1					
7	701–48196–11	.WASHER, WAVE	1					
8	701–48236–00	.ROLLER, DETENT	1					
9	702–48237–00	.ADAPTOR	1					
10	702–48238–00	.SPRING, DETENT	1					
11	701–48249–00	.ADAPTOR, SPRING	1					
12	701–48248–00	.ROLLER, FREE ACCEL.	1					
13	701–48152–11	.KNOB, FREE ACCEL.	1					FOR RIGHT
	701–48152–20	.KNOB, FREE ACCEL.	1					FOR LEFT
14	701–48243–00	.BUSHING	1					
15	701–48198–10	.WASHER, WAVE	1					
16	701–48281–10	.SCREW	3					
17	701–48289–00	.SCREW	4					
18	701–48268–00	.SPACER	1					
19	701–48213–00	.BACK PLATE 2	1					
20	92780–06025	.SCREW, FLAT HEAD	2					
21	701–48255–00	.COLLAR	1					

701 REMOTE CONTROL (PULL TO OPEN TYPE)

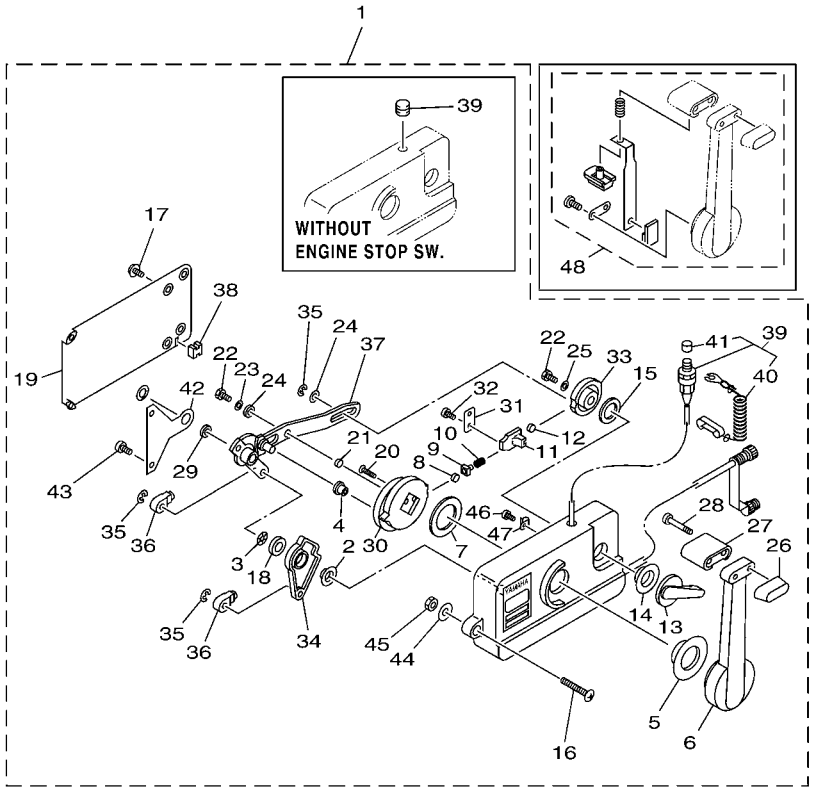

*1 : FOR 701-48101-23/ 701-48102-23
*2 : FOR 701-48101-51/ 701-48101-G1/ 701-48102-51/ 701-48102-G1
*3 : FOR 701-48101-G1/ 701-48102-G1

6011100-G050

FIG. 5 REMOTE CONTROL ASSY 1

REF. NO.	PART NO.	DESCRIPTION	601R					REMARKS
22	97390–06018	.BOLT	2					
23	702–48288–00	.WASHER, PLAIN	1					
24	701–48246–00	.SPACER	2					
25	92990–06300	.WASHER, INTERNAL TOOTH	1					
26	701–48229–00	.GRIP, CONTROL LEVER	1					
27	701–48222–00	.GRIP, CONTROL LEVER	1					
28	701–48282–00	.SCREW	2					
29	701–48266–00	.SPACER	1					
30	701–48232–00	.GEAR	1					
31	701–48189–11	.RETAINER	1					
32	98580–05010	.SCREW, PAN HEAD	2					
33	701–48153–12	.SHAFT, FREE ACCEL.	1					
34	701–48271–00	.ARM, SHIFT	1					FOR RIGHT
	701–48271–10	.ARM, SHIFT	1					FOR LEFT
35	93430–06024	.CIRCLIP	3					
36	703–48345–01	.CABLE END, REMOTE CONTROL 2	2					
37	701–48261–00	.ARM, THROTTLE	1					FOR RIGHT
	701–48261–10	.ARM, THROTTLE	1					FOR LEFT
38	701–48358–00	.ANCHOR, CABLE	1					
39	701–82575–53	.ENGINE STOP SWITCH ASSY	1					*1
	701–48138–50	.CAP, LOCK ARM	1					*2
40	682–82556–00	..LANYARD, STOP SWITCH	1					FOR 701-82575-53
41	689–8257Y–00	..CAP	1					FOR 701-82575-53
42	701–48133–00	.PLATE, LINK	1					
43	98580–05020	.SCREW, PAN HEAD	2					
44	701–48287–00	.WASHER	3					
45	95380–06600	.NUT, HEXAGON	3					

701 REMOTE CONTROL (PULL TO OPEN TYPE)

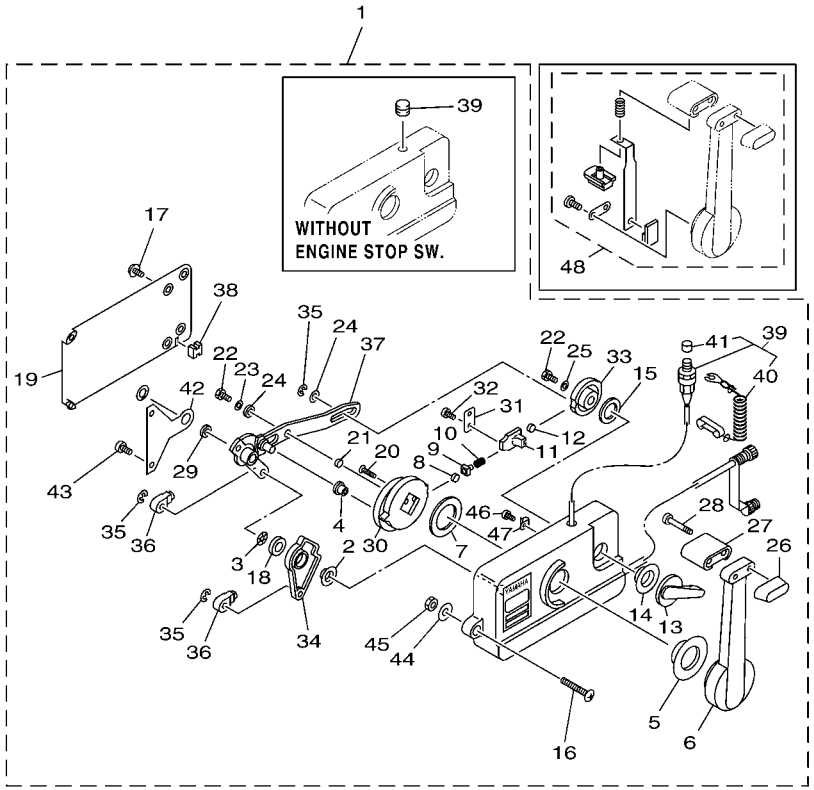

*1 : FOR 701-48101-23/ 701-48102-23
*2 : FOR 701-48101-51/ 701-48101-G1/ 701-48102-51/ 701-48102-G1
*3 : FOR 701-48101-G1/ 701-48102-G1

6011100-G050

FIG. 5 REMOTE CONTROL ASSY 1

REF. NO.	PART NO.	DESCRIPTION	601R					REMARKS
46	701–48283–00	.SCREW	1					*1
47	701–82594–00	.CLAMP	1					*1
48	701–48280–00	NEUTRAL LOCK KIT	1					*3

701 REMOTE CONTROL (PUSH TO OPEN TYPE)

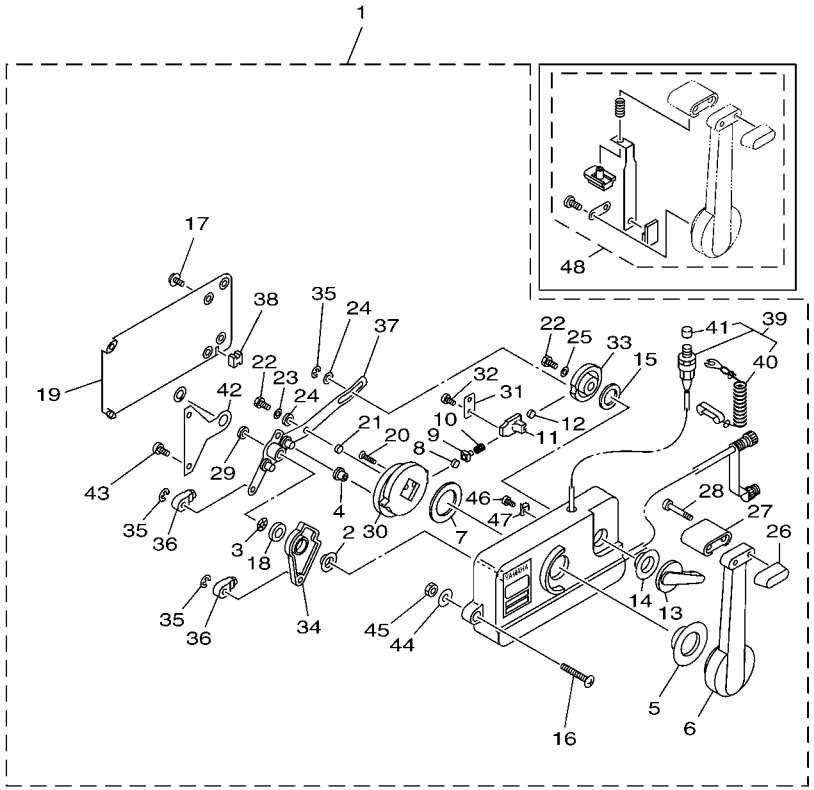

*1 : FOR 701-48130-E0/ 701-18140-E0

6011100-G060

FIG. 6 REMOTE CONTROL ASSY 2

REF. NO.	PART NO.	DESCRIPTION	601R					REMARKS
1	701–48130–23	REMOTE CONTROL ASSY (RIGHT)	1					UR
	701–48130–E0	REMOTE CONTROL ASSY (RIGHT)	1					UR
	701–48140–E0	REMOTE CONTROL ASSY (LEFT)	1					UR
2	701–48235–00	.BUSHING	1					
3	701–48197–10	.WASHER, WAVE	1					
4	701–48252–00	.ROLLER, CAM	1					
5	701–48234–00	.BUSHING 1	1					
6	701–48221–00	.LEVER, CONTROL	1					
7	701–48196–11	.WASHER, WAVE	1					
8	701–48236–00	.ROLLER, DETENT	1					
9	702–48237–00	.ADAPTOR	1					
10	702–48238–00	.SPRING, DETENT	1					
11	701–48249–00	.ADAPTOR, SPRING	1					
12	701–48248–00	.ROLLER, FREE ACCEL.	1					
13	701–48152–11	.KNOB, FREE ACCEL.	1					FOR RIGHT
	701–48152–20	.KNOB, FREE ACCEL.	1					FOR LEFT
14	701–48243–00	.BUSHING	1					
15	701–48198–10	.WASHER, WAVE	1					
16	701–48281–10	.SCREW	3					
17	701–48289–00	.SCREW	4					
18	701–48268–00	.SPACER	1					
19	701–48213–00	.BACK PLATE 2	1					
20	92780–06025	.SCREW, FLAT HEAD	2					
21	701–48255–00	.COLLAR	1					
22	97390–06018	.BOLT	2					
23	702–48288–00	.WASHER, PLAIN	1					
24	701–48246–00	.SPACER	2					

701 REMOTE CONTROL (PUSH TO OPEN TYPE)

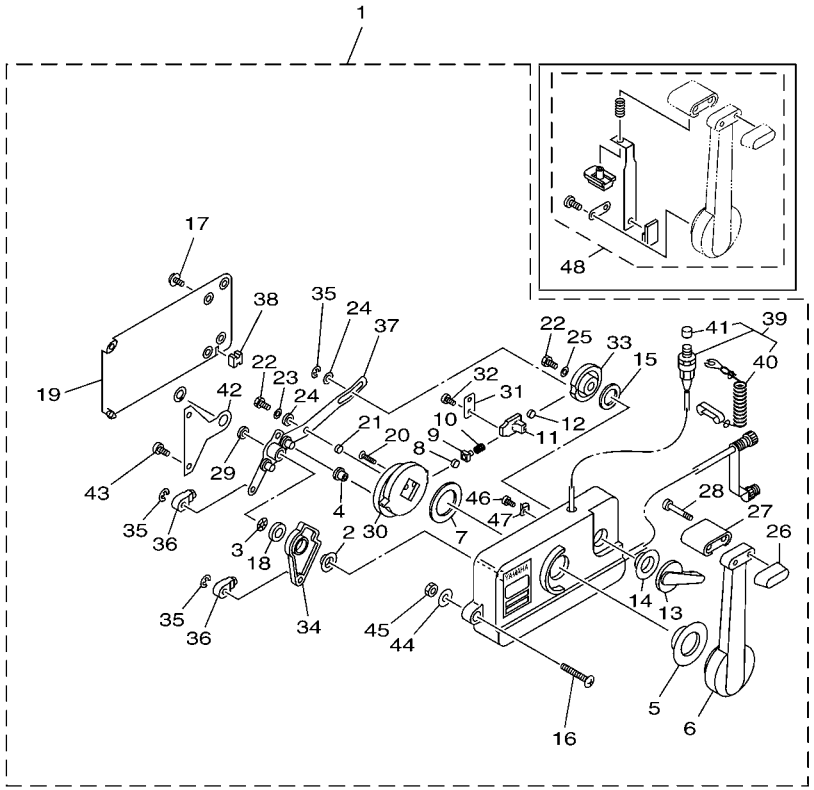

*1 : FOR 701-48130-E0/ 701-18140-E0

6011100-G060

FIG. 6 REMOTE CONTROL ASSY 2

REF. NO.	PART NO.	DESCRIPTION	601R					REMARKS
25	92990–06300	.WASHER, INTERNAL TOOTH	1					
26	701–48229–00	.GRIP, CONTROL LEVER	1					
27	701–48222–00	.GRIP, CONTROL LEVER	1					
28	701–48282–00	.SCREW	2					
29	701–48266–00	.SPACER	1					
30	701–48232–00	.GEAR	1					
31	701–48189–11	.RETAINER	1					
32	98580–05010	.SCREW, PAN HEAD	2					
33	701–48153–12	.SHAFT, FREE ACCEL.	1					
34	701–48271–00	.ARM, SHIFT	1					FOR RIGHT
	701–48271–10	.ARM, SHIFT	1					FOR LEFT
35	93430–06024	.CIRCLIP	3					
36	703–48345–01	.CABLE END, REMOTE CONTROL 2	2					
37	701–48261–20	.ARM, THROTTLE	1					
38	701–48358–00	.ANCHOR, CABLE	1					
39	701–82575–53	.ENGINE STOP SWITCH ASSY	1					
40	682–82556–00	..LANYARD, STOP SWITCH	1					
41	689–8257Y–00	..CAP	1					
42	701–48133–00	.PLATE, LINK	1					
43	98580–05020	.SCREW, PAN HEAD	2					
44	701–48287–00	.WASHER	3					
45	95380–06600	.NUT, HEXAGON	3					
46	701–48283–00	.SCREW	1					
47	701–82594–00	.CLAMP	1					
48	701–48280–00	NEUTRAL LOCK KIT	1					*1

703 REMOTE CONTROL (PULL TO OPEN TYPE)

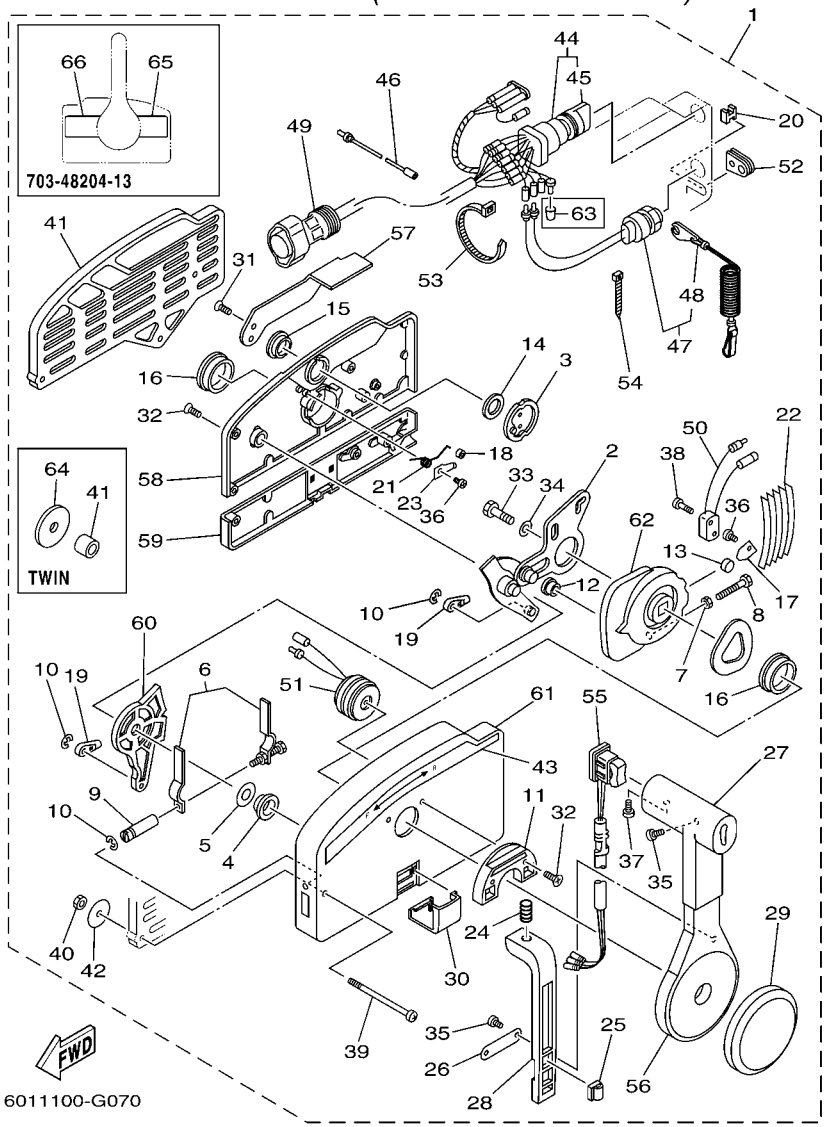

FIG. 7 REMOTE CONTROL ASSY 3

REF. NO.	PART NO.	DESCRIPTION	601R					REMARKS
1	703–48204–13	REMOTE CONTROL ASSY (7P)	1					UR WITHOUT PT/T SW.
	703–48210–16	REMOTE CONTROL ASSY (10P)	1					UR WITHOUT PT/T SW.
	703–48220–15	REMOTE CONTROL ASSY (7P)	1					UR FOR TWIN
	703–48230–15	REMOTE CONTROL ASSY (7P)	1					UR WITHOUT PT/T SW.
	703–48250–17	REMOTE CONTROL ASSY (10P)	1					UR WITH PT/T SW.
	703–48272–17	REMOTE CONTROL ASSY (10P)	1					UR WITH PT/T SW.
2	703–48261–11	.ARM, THROTTLE	1					
3	703–48153–00	.SHAFT, FREE ACCEL.	1					
4	703–48235–00	.BUSHING	1					
5	703–48268–00	.SPACER	1					
6	703–48264–00	.FRICTION, THROTTLE	1					
7	95380–05600	.NUT	1					
8	97380–05025	.BOLT	1					
9	703–48265–00	.SHAFT, FRICTION	1					
10	93430–06024	.CIRCLIP	3					
11	703–48245–00	.PLATE, LOCK	1					
12	703–48252–00	.ROLLER, CAM	1					
13	701–48248–00	.ROLLER, FREE ACCEL.	1					
14	703–48198–00	.WASHER, WAVE	1					
15	703–48243–00	.BUSHING	1					
16	703–48236–00	.BUSHING 1	2					
17	703–48189–00	.RETAINER	1					
18	703–48234–00	.ROLLER, DETENT	1					
19	703–48345–01	.CABLE END, REMOTE CONTROL 2	2					
20	703–48358–00	.ANCHOR, CABLE	1					
21	703–48244–00	.SPRING, FREE ACCEL.	1					
22	703–48238–00	.SPRING, DETENT	5					

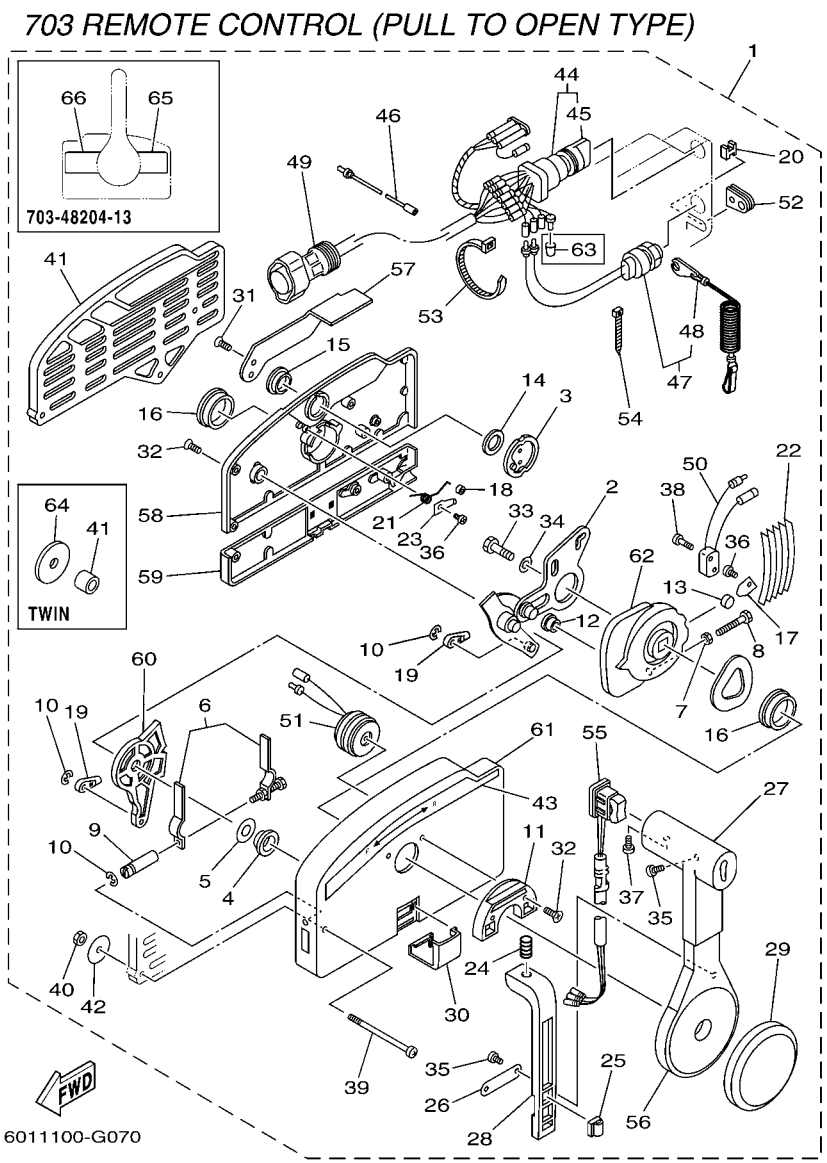

FIG. 7 REMOTE CONTROL ASSY 3

REF. NO.	PART NO.	DESCRIPTION	601R					REMARKS
23	703–48246–00	.SPACER	1					
24	703–48227–00	.SPRING, NEUTRAL LOCK	1					
25	703–82594–00	.CLAMP	1					WITH PT/T SW.
26	703–48226–00	.PLATE, STOPPER	1					
27	703–48222–00	.GRIP, CONTROL LEVER	1					FOR SINGLE
	703–48222–10	.GRIP, CONTROL LEVER	1					FOR TWIN
28	703–48223–00	.LOCK, NEUTRAL	1					
29	703–48225–00	.COVER	1					
30	703–48219–00	.COVER, LEAD	1					
31	703–48281–00	.SCREW	2					
32	703–48282–00	.SCREW	7					
33	97380–08030	.BOLT	1					
34	92990–08600	.WASHER, PLATE	1					
35	98580–04010	.SCREW, PAN HEAD	3					FOR SINGLE
	98580–04010	.SCREW, PAN HEAD	2					FOR TWIN
36	98580–04006	.SCREW, PAN HEAD	2					
37	98580–05010	.SCREW, PAN HEAD	1					
38	98580–03015	.SCREW, PAN HEAD	2					
39	703–48291–10	.SCREW (M6)	3					
40	95380–06600	.NUT, HEXAGON	3					
41	703–48293–10	.SPACER, REMOTE CONTROL	1					FOR SINGLE
	703–48293–00	.SPACER, REMOTE CONTROL	3					FOR TWIN
42	701–48287–00	.WASHER	3					
43	703–48215–00	.GRAPHIC	1					EXCEPT 703-48204-13
44	703–82510–33	.MAIN SWITCH ASSY	1					(7P)
	703–82510–43	.MAIN SWITCH ASSY	1					(10P)
45	703–82577–00	..CAP, KEY	1					

703 REMOTE CONTROL (PULL TO OPEN TYPE)

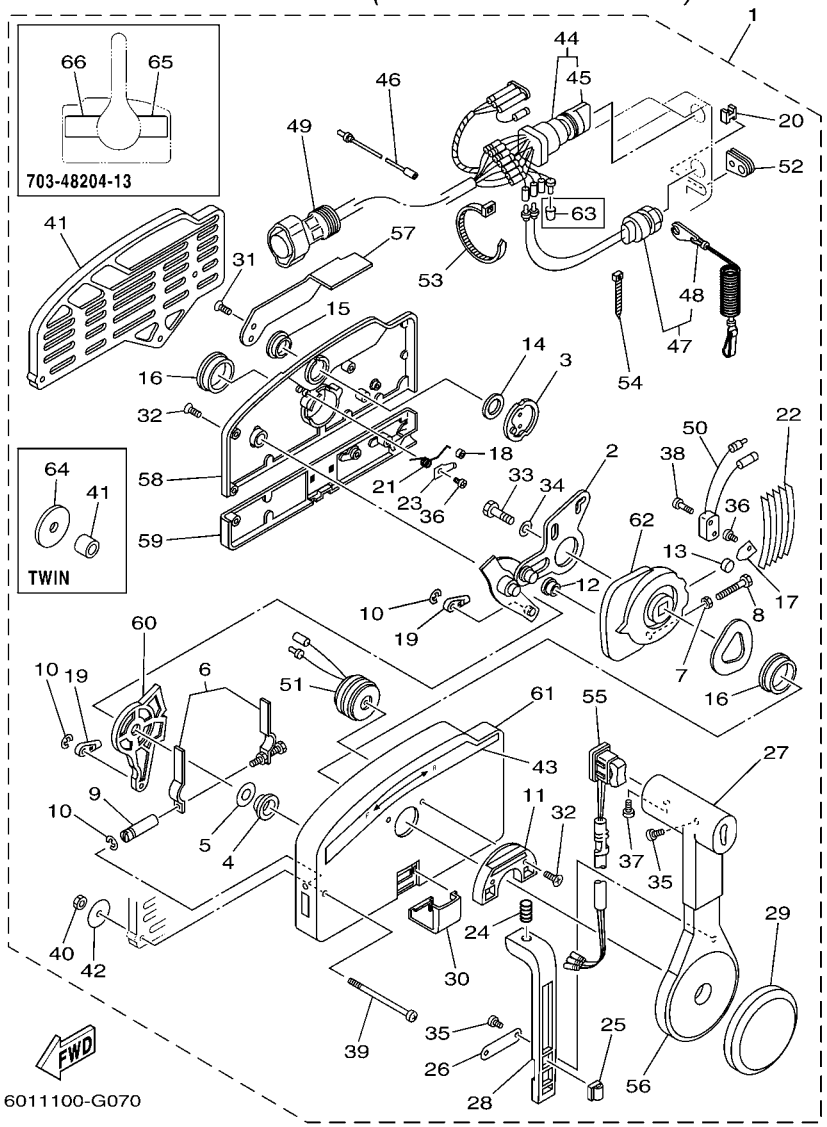

FIG. 7 REMOTE CONTROL ASSY 3

REF. NO.	PART NO.	DESCRIPTION	601R					REMARKS
46	703–82531–00	.WIRE, LEAD (L70)	1					
47	688–82575–01	.ENGINE STOP SWITCH ASSY	1					
48	682–82556–00	..LANYARD, STOP SWITCH	1					
49	688–82586–21	.EXTENSION, WIRE HARNESS (4.9M)	1					(7P)
	688–8258A–20	.EXTENSION, WIRE HARNESS (4.9M)	1					(10P)
50	703–82540–00	.NEUTRAL SWITCH ASSY	1					
51	703–83383–02	.BUZZER	1					
52	703–48284–00	.GROMMET	1					
	703–48284–10	.GROMMET	1					FOR 703-48272-17
53	703–82591–00	.BAND	1					
	703–82591–00	.BAND	3					FOR 703-48272-17
54	703–82592–00	.BAND	1					
55	703–48224–00	.COVER, CONTROL LEVER	1					WITHOUT PT/T SW.
	703–82563–02	.TRIM & TILT SWITCH ASSY	1					FOR 703-48250-17
	703–82563–12	.TRIM & TILT SWITCH ASSY	1					FOR 703-48272-17
56	703–48221–00	.LEVER, CONTROL	1					
57	703–48152–00	.KNOB, FREE ACCEL.	1					
58	703–48212–00	.BACK PLATE 1	1					
59	703–48213–00	.BACK PLATE 2	1					
60	703–48271–00	.ARM, SHIFT	1					
61	703–48211–01	.HOUSING,1	1					
62	703–48232–00	.GEAR	1					
63	703–82542–00	.CAP	2					FOR 703-48210-16
64	702–48287–00	.WASHER	3					FOR TWIN
65	703–48216–00	.GRAPHIC	1					FOR 703-48204-13
66	703–48216–10	.GRAPHIC	1					FOR 703-48204-13

703 REMOTE CONTROL (PUSH TO OPEN TYPE)

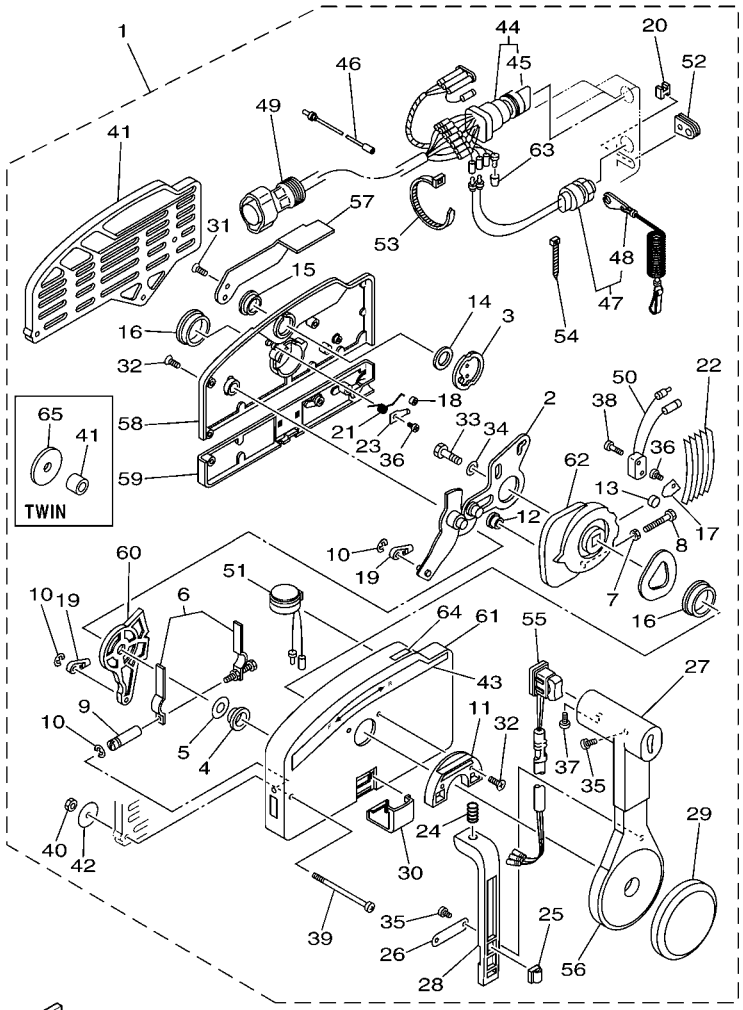

6011100-G080

*1: FOR 703-48201-16/ 703-48205-17/ 703-48207-17
*2: FOR 703-48201-A3/ 703-48205-A5/ 703-48207-A5/ 703-48208-A4
*3: FOR 703-48202-15/ 703-48203-15
*4: FOR 703-48201-16/ 703-48202-15/ 703-48203-15/ 703-48205-17/ 703-48207-17
*5: FOR 703-48201-A3/ 703-48203-A3/ 703-48205-A5/ 703-48207-A5/ 703-48208-A4
*6: FOR 703-48201-A3/ 703-48208-A4
*7: FOR 703-48203-A3/ 703-48205-A5/ 703-48207-A5

FIG. 8 REMOTE CONTROL ASSY 4

REF. NO.	PART NO.	DESCRIPTION	601R					REMARKS
1	703–48201–16	REMOTE CONTROL ASSY (10P)	1					UR WITHOUT PT/T SW.
	703–48201–A3	REMOTE CONTROL ASSY (10P)	1					UR WITHOUT PT/T SW.
	703–48202–15	REMOTE CONTROL ASSY (7P)	1					UR FOR TWIN
	703–48203–15	REMOTE CONTROL ASSY (7P)	1					UR WITHOUT PT/T SW.
	703–48203–A3	REMOTE CONTROL ASSY (7P)	1					UR WITHOUT PT/T SW.
	703–48205–17	REMOTE CONTROL ASSY (10P)	1					UR WITH PT/T SW.
	703–48205–A5	REMOTE CONTROL ASSY (10P)	1					UR WITH PT/T SW.
	703–48207–17	REMOTE CONTROL ASSY (10P)	1					UR WITH PT/T SW.
	703–48207–A5	REMOTE CONTROL ASSY (10P)	1					UR WITH PT/T SW.
	703–48208–A4	REMOTE CONTROL ASSY (10P)	1					UR FOR TWIN
2	703–48261–01	.ARM, THROTTLE	1					
3	703–48153–00	.SHAFT, FREE ACCEL.	1					
4	703–48235–00	.BUSHING	1					
5	703–48268–00	.SPACER	1					
6	703–48264–00	.FRICTION, THROTTLE	1					
7	95380–05600	.NUT	1					
8	97380–05025	.BOLT	1					
9	703–48265–00	.SHAFT, FRICTION	1					
10	93430–06024	.CIRCLIP	3					
11	703–48245–00	.PLATE, LOCK	1					
12	703–48252–00	.ROLLER, CAM	1					
13	701–48248–00	.ROLLER, FREE ACCEL.	1					
14	703–48198–00	.WASHER, WAVE	1					
15	703–48243–00	.BUSHING	1					
16	703–48236–00	.BUSHING 1	2					
17	703–48189–00	.RETAINER	1					
18	703–48234–00	.ROLLER, DETENT	1					

703 REMOTE CONTROL (PUSH TO OPEN TYPE)

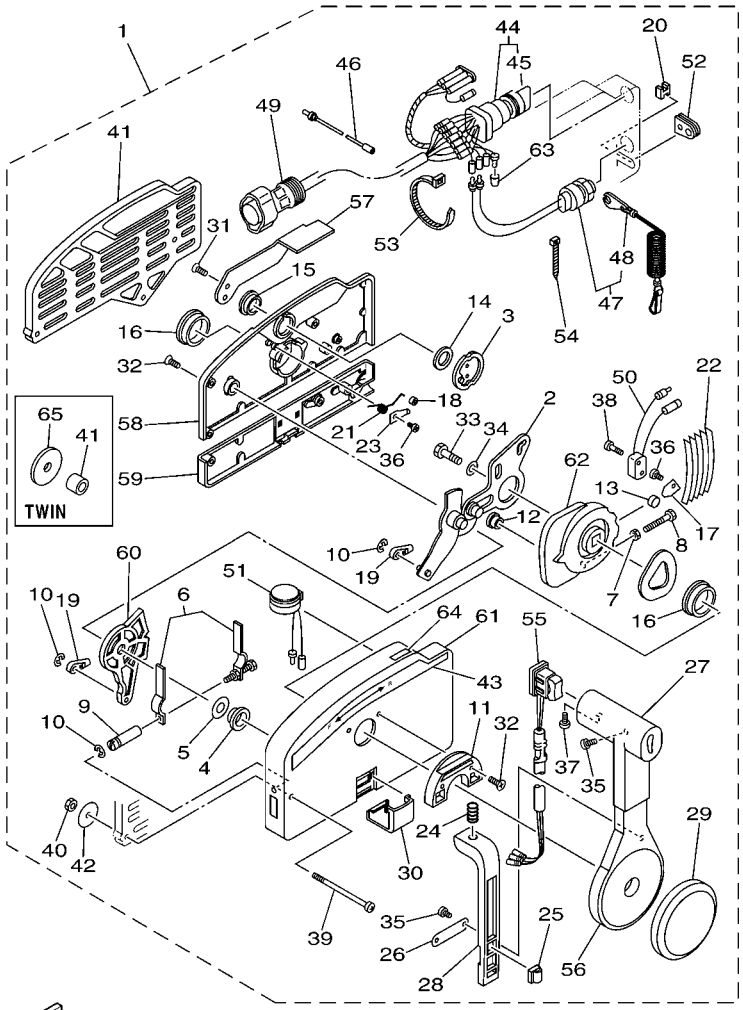

6011100-G080

*1: FOR 703-48201-16/ 703-48205-17/ 703-48207-17
*2: FOR 703-48201-A3/ 703-48205-A5/ 703-48207-A5/ 703-48208-A4
*3: FOR 703-48202-15/ 703-48203-15
*4: FOR 703-48201-16/ 703-48202-15/ 703-48203-15/ 703-48205-17/ 703-48207-17
*5: FOR 703-48201-A3/ 703-48203-A3/ 703-48205-A5/ 703-48207-A5/ 703-48208-A4
*6: FOR 703-48201-A3/ 703-48208-A4
*7: FOR 703-48203-A3/ 703-48205-A5/ 703-48207-A5

FIG. 8 REMOTE CONTROL ASSY 4

REF. NO.	PART NO.	DESCRIPTION	601R					REMARKS
19	703–48345–01	.CABLE END, REMOTE CONTROL 2	2					
20	703–48358–00	.ANCHOR, CABLE	1					
21	703–48244–00	.SPRING, FREE ACCEL.	1					
22	703–48238–00	.SPRING, DETENT	5					
23	703–48246–00	.SPACER	1					
24	703–48227–00	.SPRING, NEUTRAL LOCK	1					
25	703–82594–00	.CLAMP	1					WITH PT/T SW.
26	703–48226–00	.PLATE, STOPPER	1					
27	703–48222–00	.GRIP, CONTROL LEVER	1					FOR SINGLE
	703–48222–10	.GRIP, CONTROL LEVER	1					FOR TWIN
28	703–48223–00	.LOCK, NEUTRAL	1					
29	703–48225–00	.COVER	1					
30	703–48219–00	.COVER, LEAD	1					
31	703–48281–00	.SCREW	2					
32	703–48282–00	.SCREW	7					
33	97380–08030	.BOLT	1					
34	92990–08600	.WASHER, PLATE	1					
35	98580–04010	.SCREW, PAN HEAD	3					FOR SINGLE
	98580–04010	.SCREW, PAN HEAD	2					FOR TWIN
36	98580–04006	.SCREW, PAN HEAD	2					
37	98580–05010	.SCREW, PAN HEAD	1					
38	98580–03015	.SCREW, PAN HEAD	2					
39	703–48291–10	.SCREW (M6)	3					
40	95380–06600	.NUT, HEXAGON	3					
41	703–48293–10	.SPACER, REMOTE CONTROL	1					FOR SINGLE
	703–48293–00	.SPACER, REMOTE CONTROL	3					FOR TWIN
42	701–48287–00	.WASHER	3					

703 REMOTE CONTROL (PUSH TO OPEN TYPE)

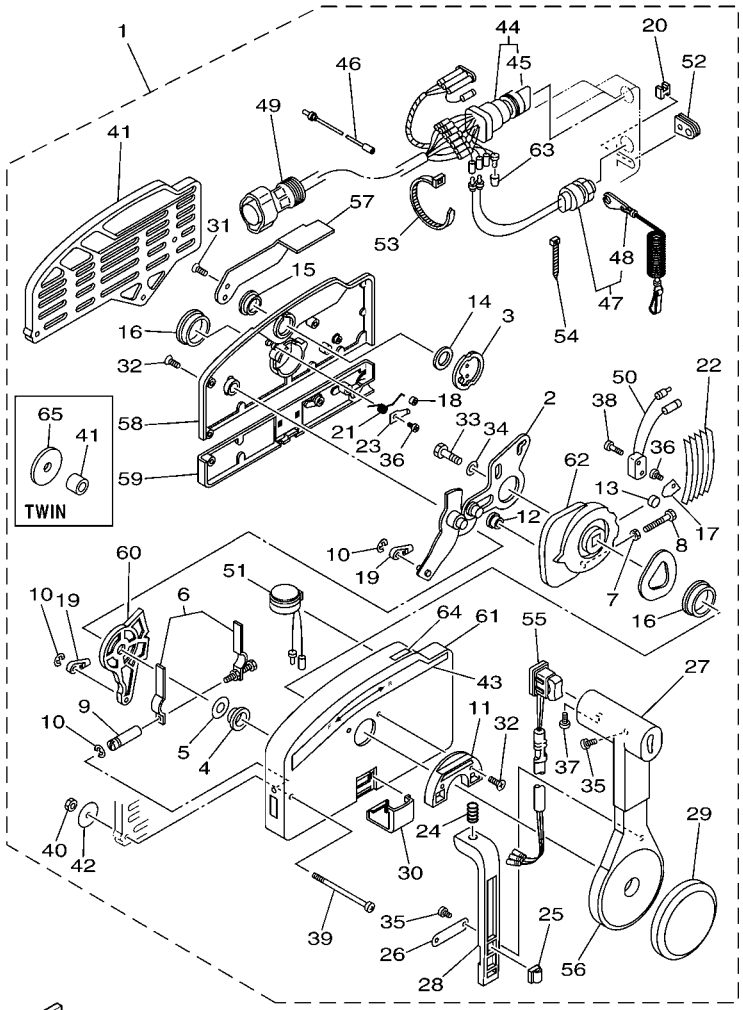

6011100-G080

*1: FOR 703-48201-16/ 703-48205-17/ 703-48207-17
*2: FOR 703-48201-A3/ 703-48205-A5/ 703-48207-A5/ 703-48208-A4
*3: FOR 703-48202-15/ 703-48203-15
*4: FOR 703-48201-16/ 703-48202-15/ 703-48203-15/ 703-48205-17/ 703-48207-17
*5: FOR 703-48201-A3/ 703-48203-A3/ 703-48205-A5/ 703-48207-A5/ 703-48208-A4
*6: FOR 703-48201-A3/ 703-48208-A4
*7: FOR 703-48203-A3/ 703-48205-A5/ 703-48207-A5

FIG. 8 REMOTE CONTROL ASSY 4

REF. NO.	PART NO.	DESCRIPTION	601R					REMARKS
43	703–48215–00	.GRAPHIC	1					
44	703–82510–43	.MAIN SWITCH ASSY	1					*1
	703–82510–12	.MAIN SWITCH ASSY	1					*2
	703–82510–33	.MAIN SWITCH ASSY	1					*3
	703–82510–03	.MAIN SWITCH ASSY	1					FOR 703-48203-A3
45	703–82577–00	..CAP, KEY	1					FOR 703-82510-33/43
	676–82577–00	..CAP, KEY	1					FOR 703-82510-03/12
46	703–82531–00	.WIRE, LEAD (L70)	1					
47	688–82575–01	.ENGINE STOP SWITCH ASSY	1					
48	682–82556–00	..LANYARD, STOP SWITCH	1					
49	688–8258A–20	.EXTENSION, WIRE HARNESS (4.9M)	1					(10P)
	688–82586–21	.EXTENSION, WIRE HARNESS (4.9M)	1					(7P)
50	703–82540–00	.NEUTRAL SWITCH ASSY	1					
51	703–83383–02	.BUZZER	1					*4
	703–83383–B0	.BUZZER	1					*5
52	703–48284–00	.GROMMET	1					
	703–48284–10	.GROMMET	1					FOR 703-48207-17/A5
53	703–82591–00	.BAND	1					
	703–82591–00	.BAND	3					FOR 703-48207-17/A5
54	703–82592–00	.BAND	1					
55	703–48224–00	.COVER, CONTROL LEVER	1					WITHOUT PT/T SW.
	703–82563–02	.TRIM & TILT SWITCH ASSY	1					FOR 703-48205-17/A5
	703–82563–12	.TRIM & TILT SWITCH ASSY	1					FOR 703-48207-17/A5
56	703–48221–00	.LEVER, CONTROL	1					
57	703–48152–00	.KNOB, FREE ACCEL.	1					
58	703–48212–00	.BACK PLATE 1	1					
59	703–48213–00	.BACK PLATE 2	1					

703 REMOTE CONTROL (PUSH TO OPEN TYPE)

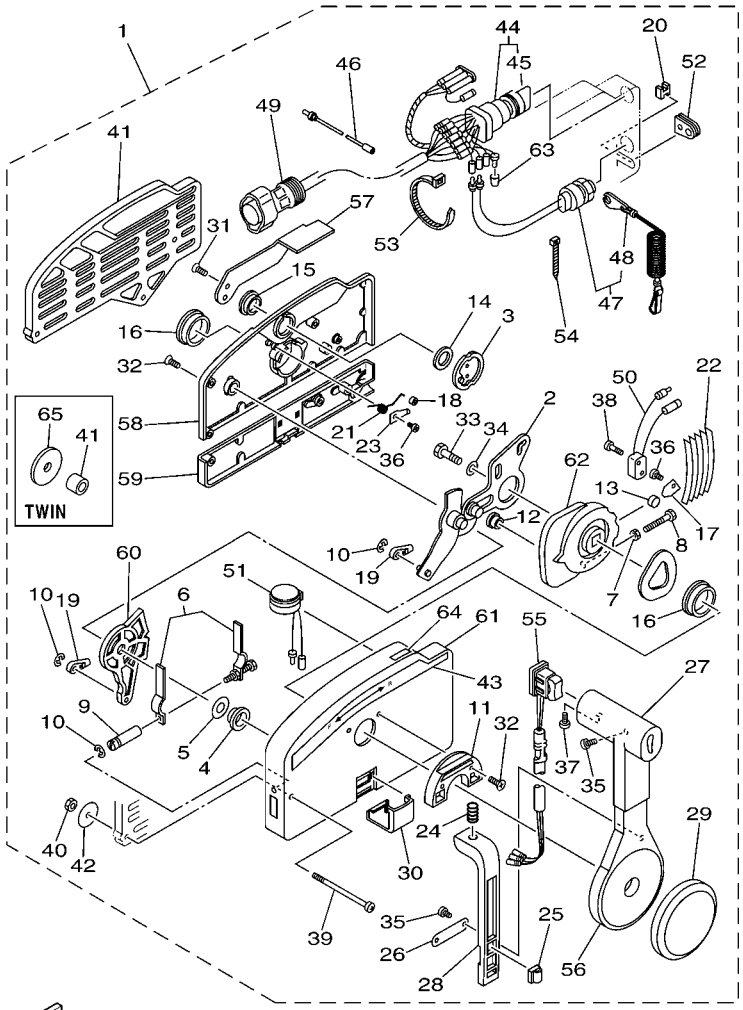

6011100-G080

*1: FOR 703-48201-16/ 703-48205-17/ 703-48207-17
*2: FOR 703-48201-A3/ 703-48205-A5/ 703-48207-A5/ 703-48208-A4
*3: FOR 703-48202-15/ 703-48203-15
*4: FOR 703-48201-16/ 703-48202-15/ 703-48203-15/ 703-48205-17/ 703-48207-17
*5: FOR 703-48201-A3/ 703-48203-A3/ 703-48205-A5/ 703-48207-A5/ 703-48208-A4
*6: FOR 703-48201-A3/ 703-48208-A4
*7: FOR 703-48203-A3/ 703-48205-A5/ 703-48207-A5

FIG. 8 REMOTE CONTROL ASSY 4

REF. NO.	PART NO.	DESCRIPTION	601R					REMARKS
60	703–48271–00	.ARM, SHIFT	1					
61	703–48211–01	.HOUSING,1	1					
62	703–48232–00	.GEAR	1					
63	703–82542–00	.CAP	2					FOR 703-48201-16
	703–82542–00	.CAP	3					*6
	703–82542–00	.CAP	1					*7
64	703–48218–00	.GRAPHIC	1					*5
65	702–48287–00	.WASHER	3					FOR TWIN

704 REMOTE CONTROL (STANDARD SINGLE)

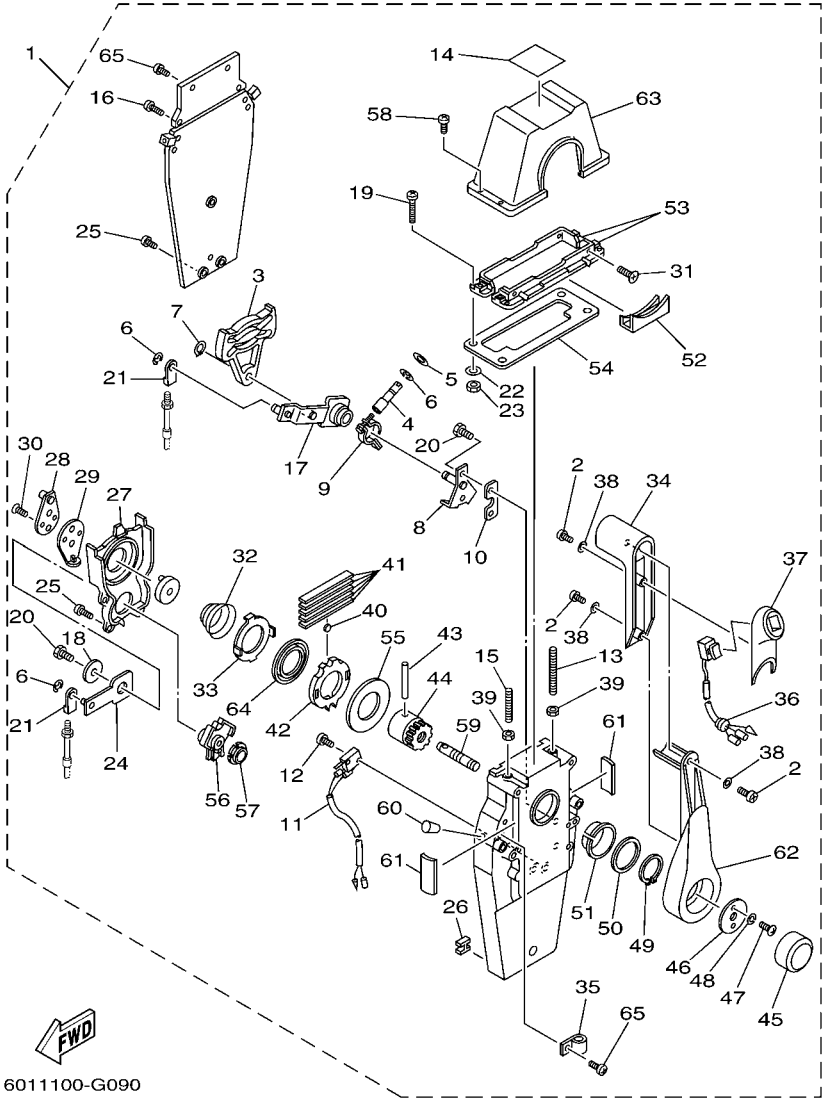

FIG. 9 REMOTE CONTROL ASSY 5

REF. NO.	PART NO.	DESCRIPTION	601R					REMARKS
1	704–48205–B1	REMOTE CONTROL ASSY	1					WITH PT/T SW.
2	704–48128–00	.SCREW 2	3					
3	EL8–48251–00	.PLATE, CAM	1					
4	704–48265–00	.SHAFT, FRICTION	1					
5	701–48246–00	.SPACER	1					
6	93430–06024	.CIRCLIP	4					
7	EL8–48259–00	.CIRCLIP 1	1					
8	704–48262–00	.SHAFT, THROTTLE	1					
9	704–48264–00	.THROTTLE, FRICTION	1					
10	704–48266–00	.SPACER	1					
11	704–82540–20	.NEUTRAL SWITCH ASSY	1					
12	6A5–48129–10	.SCREW 3	2					
13	EL8–48281–00	.SCREW	1					
14	704–48215–00	.GRAPHIC	1					
15	704–48281–00	.SCREW	1					
16	97890–05025	.SCREW, PAN HEAD	2					
17	704–48261–00	.ARM, THROTTLE	1					
18	EL8–48191–00	.WASHER 1	1					
19	704–48283–00	.SCREW	4					
20	97380–06018	.BOLT	3					
21	703–48345–01	.CABLE END, REMOTE CONTROL 2	2					
22	704–48287–00	.WASHER	4					
23	95380–05600	.NUT	4					
24	EL8–48271–10	.ARM, SHIFT	1					
25	EL8–48127–00	.SCREW 1	9					
26	703–48358–00	.ANCHOR, CABLE	1					
27	EL8–48231–00	.HOUSING, GEAR	1					

704 REMOTE CONTROL (STANDARD SINGLE)

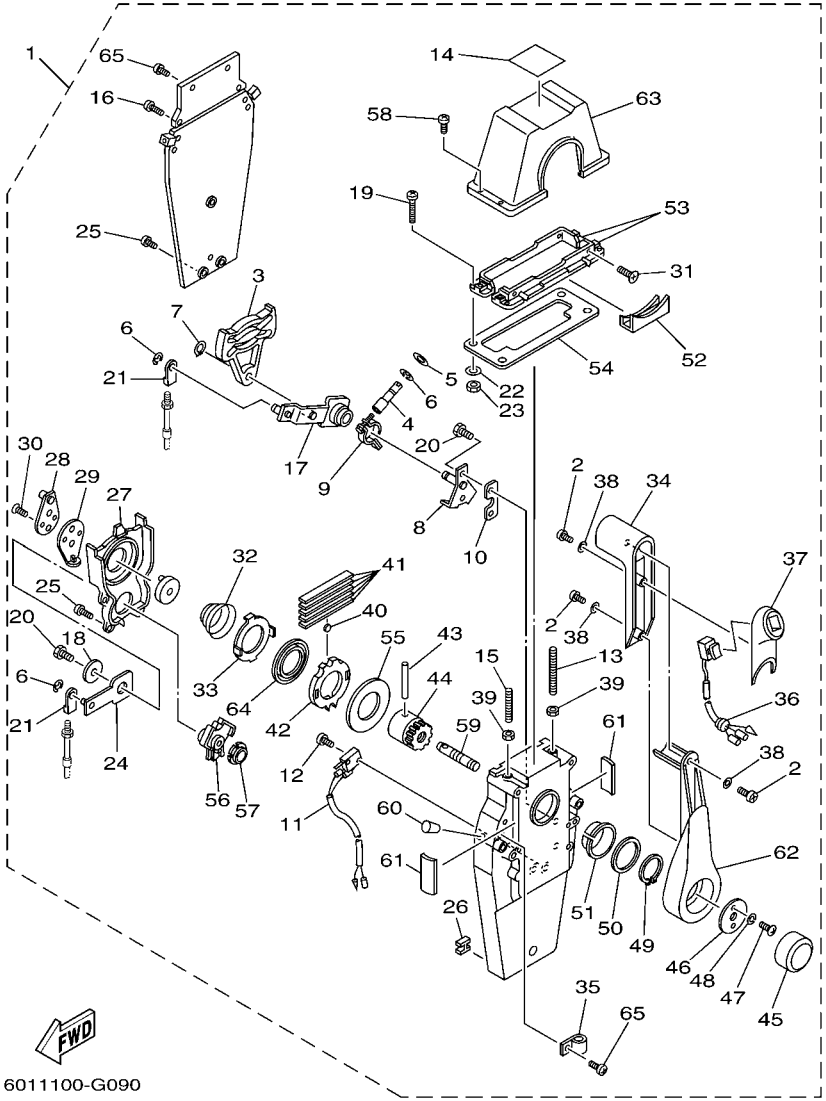

FIG. 9 REMOTE CONTROL ASSY 5

REF. NO.	PART NO.	DESCRIPTION	601R					REMARKS
28	EL8–48241–10	.ARM, DRIVE	1					
29	EL8–48254–10	.STOPPER, THROTTLE ADJUST	1					
30	92780–06020	.SCREW, FLAT HEAD	2					
31	98780–05018	.SCREW, FLAT HEAD	4					
32	EL8–48244–00	.SPRING, FREE ACCEL.	1					
33	EL8–48245–00	.PLATE, LOCK	1					
34	704–48222–B0	.GRIP, CONTROL LEVER	1					
35	704–82594–00	.CLAMP	1					
36	704–82563–41	.TRIM & TILT SWITCH ASSY	1					
37	704–48229–B1	.GRIP, CONTROL LEVER	1					
38	92990–05300	.WASHER, INTERNAL TOOTH	3					
39	95380–06600	.NUT, HEXAGON	2					
40	701–48248–00	.ROLLER, FREE ACCEL.	1					
41	704–48238–00	.SPRING, DETENT	5					
42	EL8–48232–00	.GEAR 1	1					
43	EL8–48164–00	.PIN 2	1					
44	704–48242–00	.SHAFT, DRIVE	1					
45	6X3–48225–20	.COVER	1					
46	704–48192–00	.WASHER 2	1					
47	97890–06018	.SCREW, PAN HEAD	2					
48	92990–06300	.WASHER, INTERNAL TOOTH	2					
49	EL8–48279–00	.CIRCLIP 2	1					
50	704–48193–00	.WASHER 3	1					
51	EL8–48234–00	.BUSHING 1	1					
52	704–48219–B0	.COVER, LEAD	1					
53	704–48144–00	.PLATE, STOPPER 2	2					
54	704–48176–00	.GROMMET	1					

704 REMOTE CONTROL (STANDARD SINGLE)

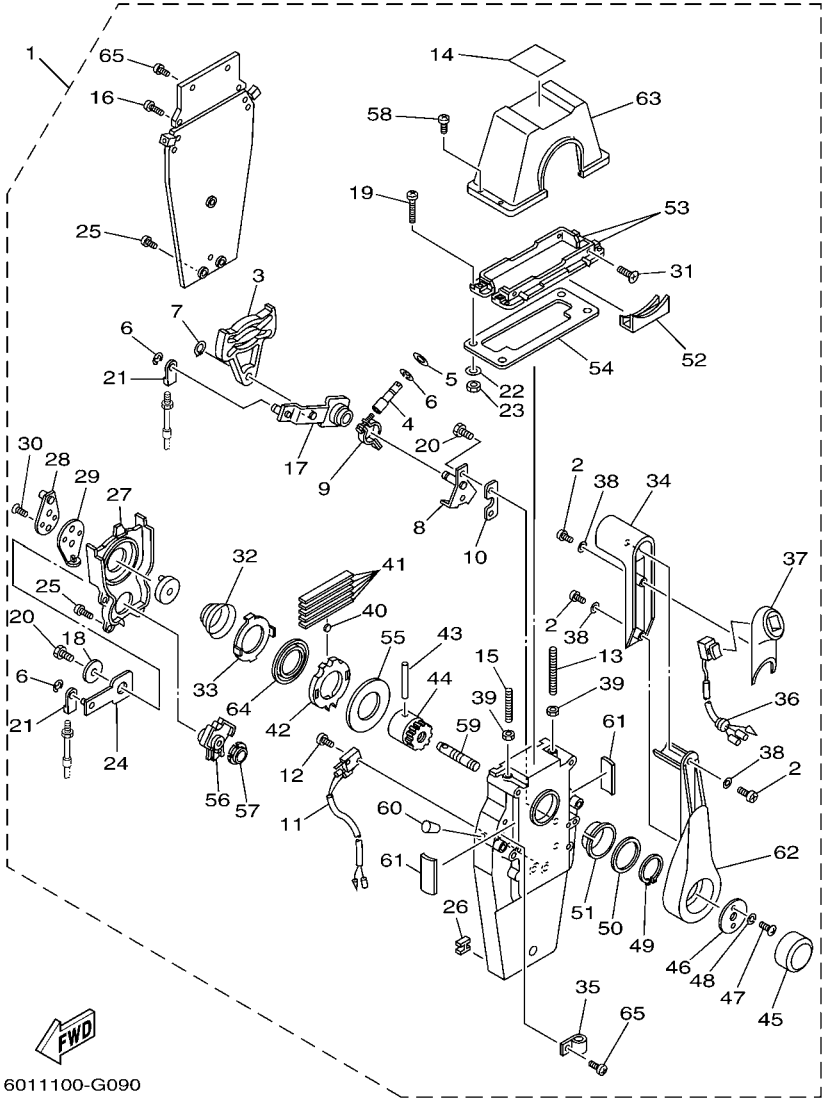

FIG. 9 REMOTE CONTROL ASSY 5

REF. NO.	PART NO.	DESCRIPTION	601R					REMARKS
55	703–48192–00	.WASHER 2	1					
56	EL8–48233–00	.GEAR 2	1					
57	702–48235–00	.BUSHING	1					
58	704–48282–00	.SCREW	4					
59	704–48153–00	.SHAFT, FREE ACCEL.	1					
60	704–48166–00	.PLUG	1					
61	704–48284–00	.GROMMET	2					
62	704–48221–B0	.LEVER, CONTROL	1					
63	704–48119–B0	.COVER	1					
64	704–48178–10	.PLATE, SHIFT	1					
65	97890–05016	.SCREW, PAN HEAD	3					

704 REMOTE CONTROL (PREMIUM SINGLE)

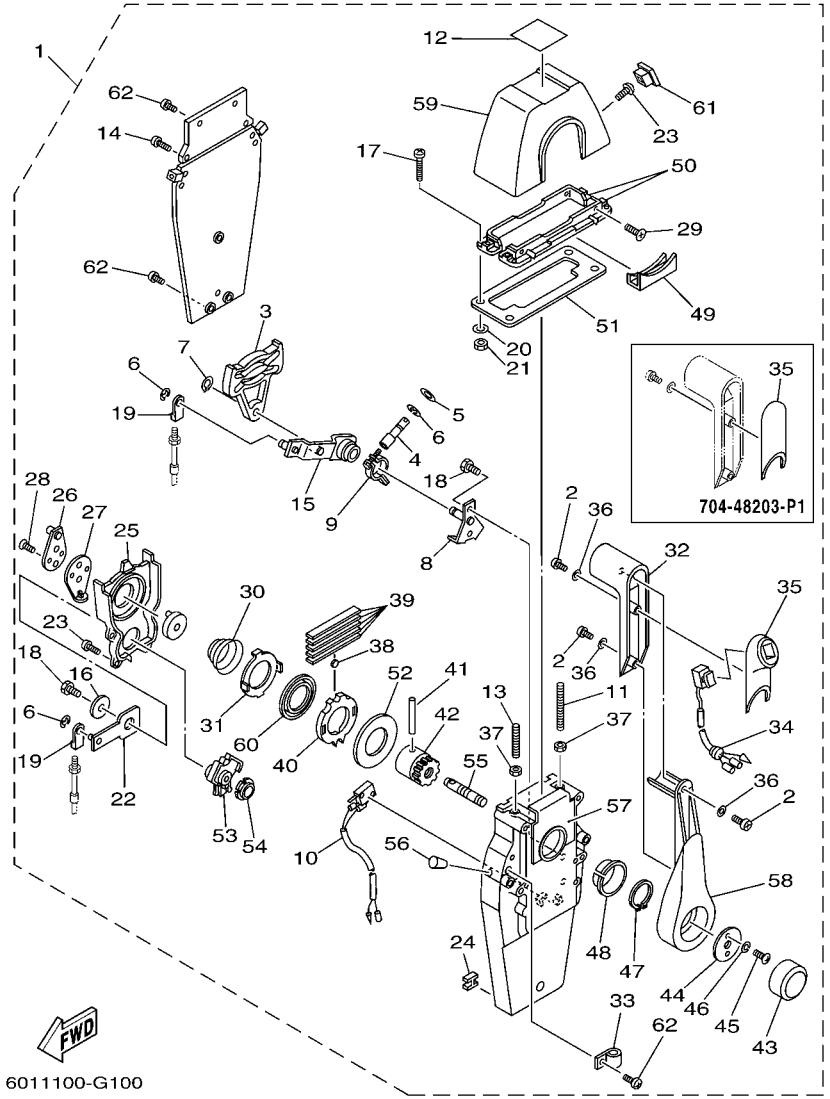

FIG. 10 REMOTE CONTROL ASSY 6

REF. NO.	PART NO.	DESCRIPTION	601R					REMARKS
1	704–48203–P1	REMOTE CONTROL ASSY (RIGHT)	1					UR WITHOUT PT/T SW.
	704–48205–P1	REMOTE CONTROL ASSY (RIGHT)	1					UR WITH PT/T SW.
	704–48206–P1	REMOTE CONTROL ASSY (LEFT)	1					UR WITH PT/T SW.
2	704–48128–00	.SCREW 2	3					
3	EL8–48251–00	.PLATE, CAM	1					
4	704–48265–00	.SHAFT, FRICTION	1					
5	701–48246–00	.SPACER	1					
6	93430–06024	.CIRCLIP	4					
7	EL8–48259–00	.CIRCLIP 1	1					
8	704–48262–00	.SHAFT, THROTTLE	1					
9	704–48264–00	.THROTTLE, FRICTION	1					
10	704–82540–20	.NEUTRAL SWITCH ASSY	1					
11	EL8–48281–00	.SCREW	1					
12	704–48215–20	.GRAPHIC	1					
13	704–48281–00	.SCREW	1					
14	97890–05025	.SCREW, PAN HEAD	2					
15	704–48261–00	.ARM, THROTTLE	1					
16	EL8–48191–00	.WASHER 1	1					
17	704–48283–00	.SCREW	4					
18	97380–06018	.BOLT	3					
19	703–48345–01	.CABLE END, REMOTE CONTROL 2	2					
20	704–48287–00	.WASHER	4					
21	95380–05600	.NUT	4					
22	704–48271–00	.ARM, SHIFT	1					
23	EL8–48127–00	.SCREW 1	10					
24	703–48358–00	.ANCHOR, CABLE	1					
25	704–48231–00	.HOUSING, GEAR	1					

704 REMOTE CONTROL (PREMIUM SINGLE)

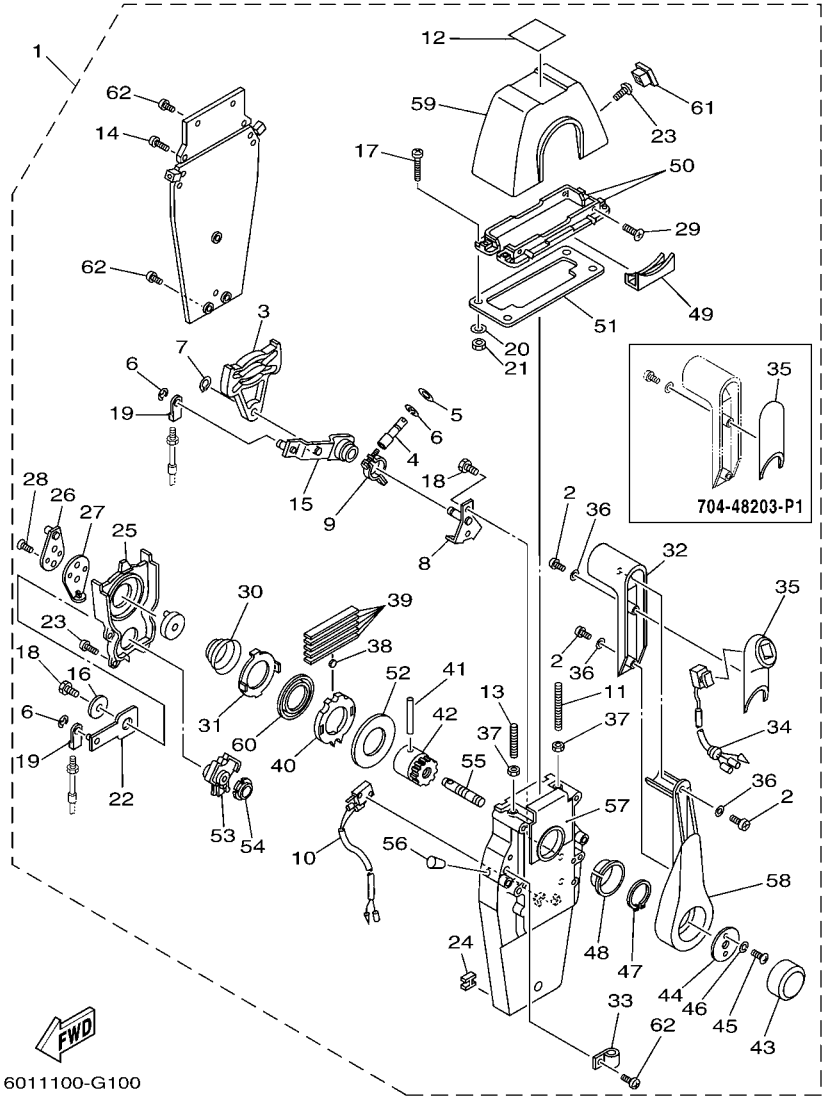

FIG. 10 REMOTE CONTROL ASSY 6

REF. NO.	PART NO.	DESCRIPTION	601R					REMARKS
26	EL8–48241–00	.ARM, DRIVE	1					
27	EL8–48254–00	.STOPPER, THROTTLE ADJUSTING	1					
28	92780–06020	.SCREW, FLAT HEAD	2					
29	98780–05018	.SCREW, FLAT HEAD	4					
30	EL8–48244–00	.SPRING, FREE ACCEL.	1					
31	EL8–48245–00	.PLATE, LOCK	1					
32	704–48222–P0	.GRIP, CONTROL LEVER	1					
33	704–82594–00	.CLAMP	1					
34	704–82563–41	.TRIM & TILT SWITCH ASSY	1					WITH PT/T SW.
35	704–48229–R0	.GRIP, CONTROL LEVER	1					WITHOUT PT/T SW.
	704–48229–P1	.GRIP, CONTROL LEVER	1					WITH PT/T SW.
36	92990–05300	.WASHER, INTERNAL TOOTH	3					
37	95380–06600	.NUT, HEXAGON	2					
38	701–48248–00	.ROLLER, FREE ACCEL.	1					
39	704–48238–00	.SPRING, DETENT	5					
40	704–48232–P1	.GEAR	1					
41	EL8–48164–00	.PIN 2	1					
42	704–48242–10	.SHAFT, DRIVE	1					
43	6X3–48225–20	.COVER	1					
44	704–48192–00	.WASHER 2	1					
45	97890–06018	.SCREW, PAN HEAD	2					
46	92990–06300	.WASHER, INTERNAL TOOTH	2					
47	EL8–48279–00	.CIRCLIP 2	1					
48	704–48234–00	.BUSHING 1	1					
49	704–48219–P0	.COVER, LEAD	1					
50	704–48144–10	.PLATE, STOPPER 2	2					
51	704–48176–00	.GROMMET	1					

704 REMOTE CONTROL (PREMIUM SINGLE)

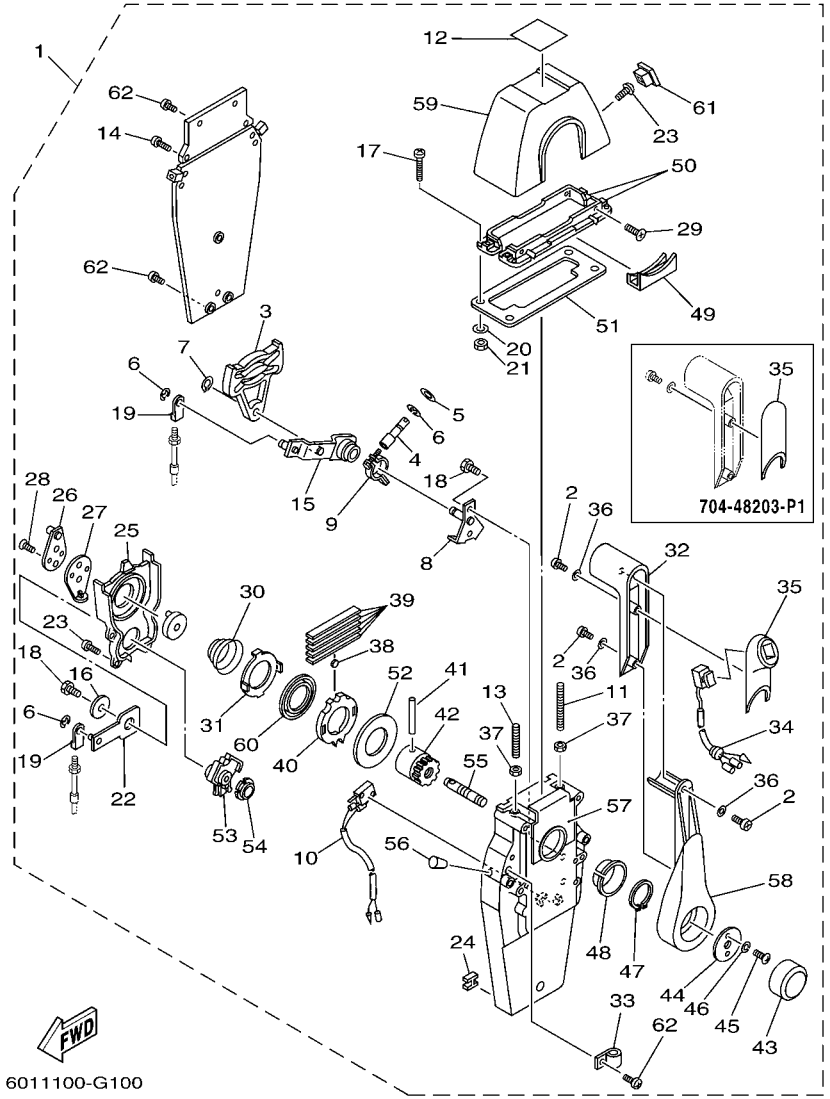

FIG. 10 REMOTE CONTROL ASSY 6

REF. NO.	PART NO.	DESCRIPTION	601R					REMARKS
52	704–48192–P0	.WASHER 2	1					
53	704–48233–00	.GEAR 2	1					
54	704–48235–00	.BUSHING	1					
55	704–48153–00	.SHAFT, FREE ACCEL.	1					
56	704–48166–00	.PLUG	1					
57	704–48284–P0	.GROMMET	1					
58	704–48221–P0	.LEVER, CONTROL	1					
59	704–48119–31	.COVER	1					
60	704–48178–10	.PLATE, SHIFT	1					
61	704–48167–01	.PLUG	1					
62	97890–05016	.SCREW, PAN HEAD	2					WITHOUT PT/T SW.
	97890–05016	.SCREW, PAN HEAD	3					WITH PT/T SW.

704 REMOTE CONTROL (PREMIUM TWIN)

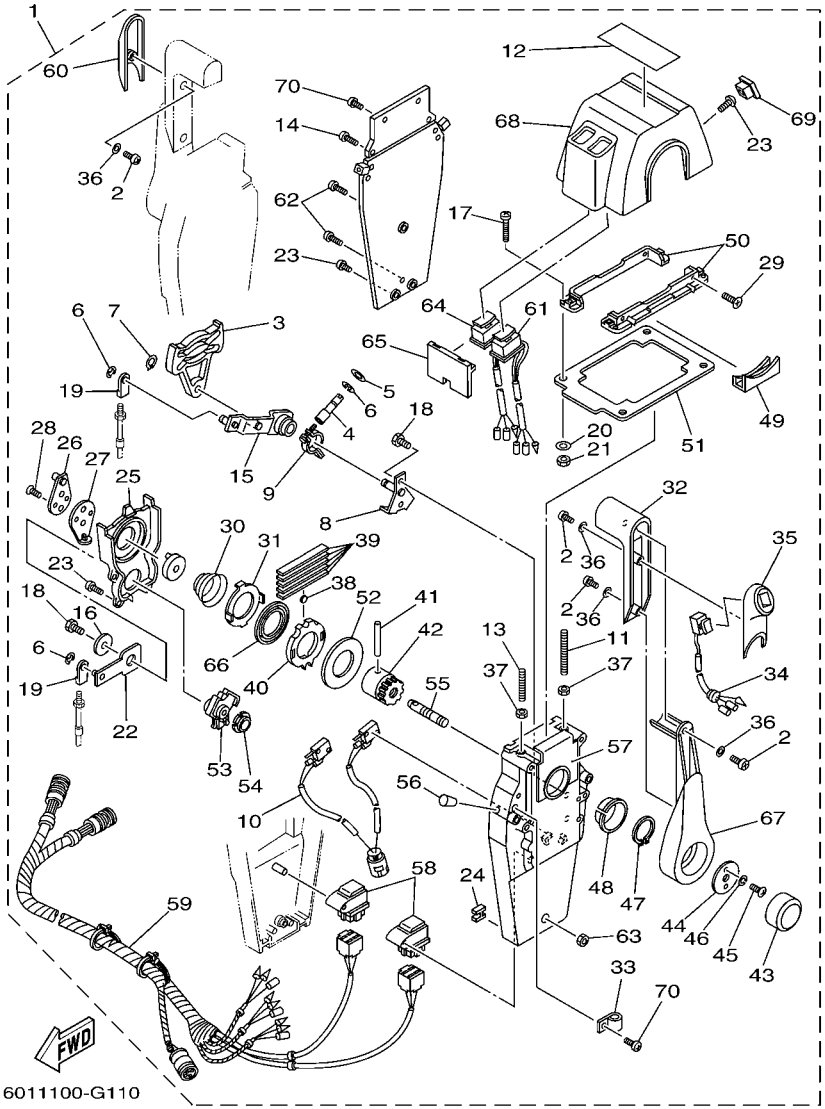

FIG. 11 REMOTE CONTROL ASSY 7

REF. NO.	PART NO.	DESCRIPTION	601R					REMARKS
1	704–48207–P1	REMOTE CONTROL ASSY	1					WITH PT/T SW.
2	704–48128–00	.SCREW 2	6					
3	EL8–48251–00	.PLATE, CAM	2					
4	704–48265–00	.SHAFT, FRICTION	2					
5	701–48246–00	.SPACER	2					
6	93430–06024	.CIRCLIP	8					
7	EL8–48259–00	.CIRCLIP 1	2					
8	704–48262–00	.SHAFT, THROTTLE	2					
9	704–48264–00	.THROTTLE, FRICTION	2					
10	704–82540–30	.NEUTRAL SWITCH ASSY	1					
11	EL8–48281–00	.SCREW	2					
12	704–48215–30	.GRAPHIC	1					
13	704–48281–00	.SCREW	2					
14	97890–05025	.SCREW, PAN HEAD	4					
15	704–48261–00	.ARM, THROTTLE	2					
16	EL8–48191–00	.WASHER 1	2					
17	704–48283–00	.SCREW	4					
18	97380–06018	.BOLT	6					
19	703–48345–01	.CABLE END, REMOTE CONTROL 2	4					
20	704–48287–00	.WASHER	4					
21	95380–05600	.NUT	4					
22	704–48271–00	.ARM, SHIFT	2					
23	EL8–48127–00	.SCREW 1	18					
24	703–48358–00	.ANCHOR, CABLE	2					
25	704–48231–00	.HOUSING, GEAR	2					
26	EL8–48241–00	.ARM, DRIVE	2					
27	EL8–48254–00	.STOPPER, THROTTLE ADJUSTING	2					

704 REMOTE CONTROL (PREMIUM TWIN)

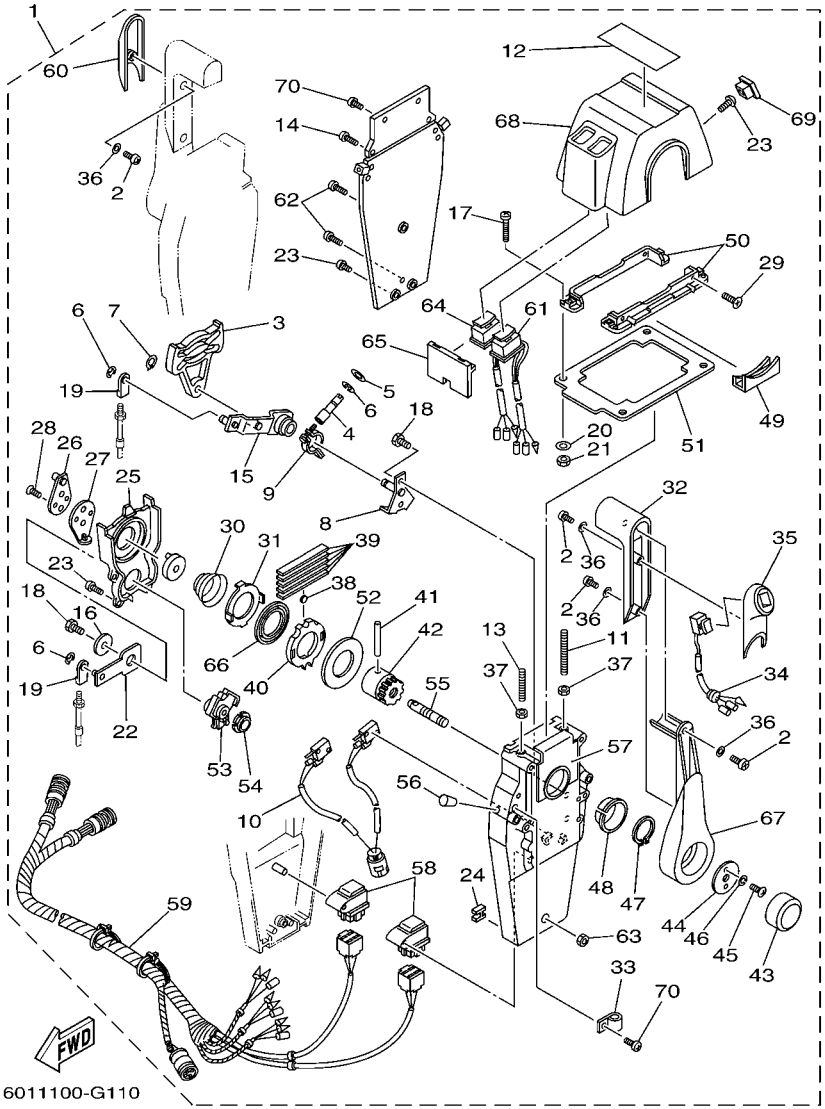

FIG. 11 REMOTE CONTROL ASSY 7

REF. NO.	PART NO.	DESCRIPTION	601R					REMARKS
28	92780–06020	.SCREW, FLAT HEAD	4					
29	98780–05018	.SCREW, FLAT HEAD	4					
30	EL8–48244–00	.SPRING, FREE ACCEL.	2					
31	EL8–48245–00	.PLATE, LOCK	2					
32	704–48222–P0	.GRIP, CONTROL LEVER	2					
33	704–82594–00	.CLAMP	1					
34	704–82563–51	.TRIM & TILT SWITCH ASSY	1					
35	704–48229–P1	.GRIP, CONTROL LEVER	1					
36	92990–05300	.WASHER, INTERNAL TOOTH	6					
37	95380–06600	.NUT, HEXAGON	4					
38	701–48248–00	.ROLLER, FREE ACCEL.	2					
39	704–48238–00	.SPRING, DETENT	10					
40	704–48232–P1	.GEAR	2					
41	EL8–48164–00	.PIN 2	2					
42	704–48242–10	.SHAFT, DRIVE	2					
43	6X3–48225–20	.COVER	2					
44	704–48192–00	.WASHER 2	2					
45	97890–06018	.SCREW, PAN HEAD	4					
46	92990–06300	.WASHER, INTERNAL TOOTH	4					
47	EL8–48279–00	.CIRCLIP 2	2					
48	704–48234–00	.BUSHING 1	2					
49	704–48219–P0	.COVER, LEAD	2					
50	704–48144–20	.PLATE, STOPPER 2	2					
51	704–48176–10	.GROMMET	1					
52	704–48192–P0	.WASHER 2	2					
53	704–48233–00	.GEAR 2	2					
54	704–48235–00	.BUSHING	2					

704 REMOTE CONTROL (PREMIUM TWIN)

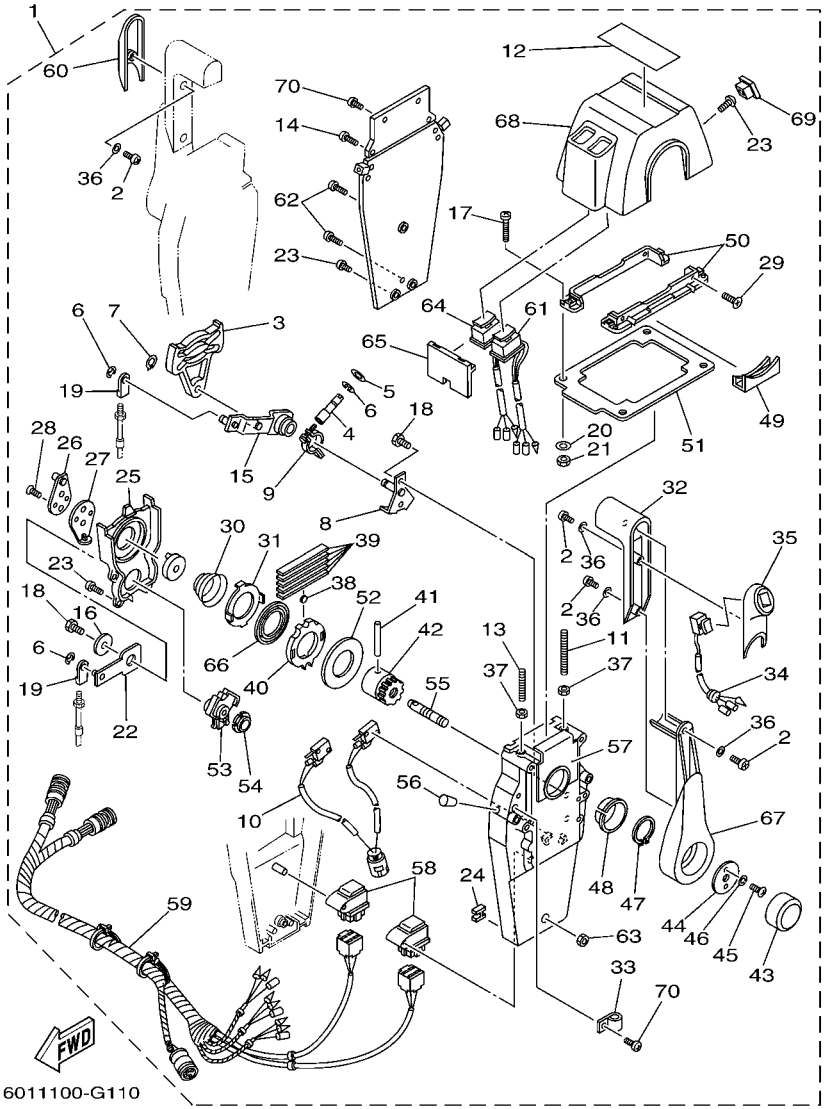

FIG. 11 REMOTE CONTROL ASSY 7

REF. NO.	PART NO.	DESCRIPTION	601R					REMARKS
55	704–48153–00	.SHAFT, FREE ACCEL.	2					
56	704–48166–00	.PLUG	2					
57	704–48284–P0	.GROMMET	2					
58	704–81950–10	.RELAY ASSY	2					
59	704–82590–10	.WIRE HARNESS ASSY	1					
60	704–48229–R0	.GRIP, CONTROL LEVER	1					
61	704–82563–H1	.TRIM & TILT SWITCH ASSY	1					
62	704–48128–00	.SCREW 2	3					
63	704–48156–00	.NUT 1	1					
64	704–82563–J1	.TRIM & TILT SWITCH ASSY	1					
65	704–48285–10	.GROMMET 2	1					
66	704–48178–00	.PLATE, SHIFT	2					
67	704–48221–P0	.LEVER, CONTROL	2					
68	704–48119–41	.COVER	1					
69	704–48167–11	.PLUG	1					
70	97890–05016	.SCREW, PAN HEAD	5					

6X3 REMOTE CONTROL

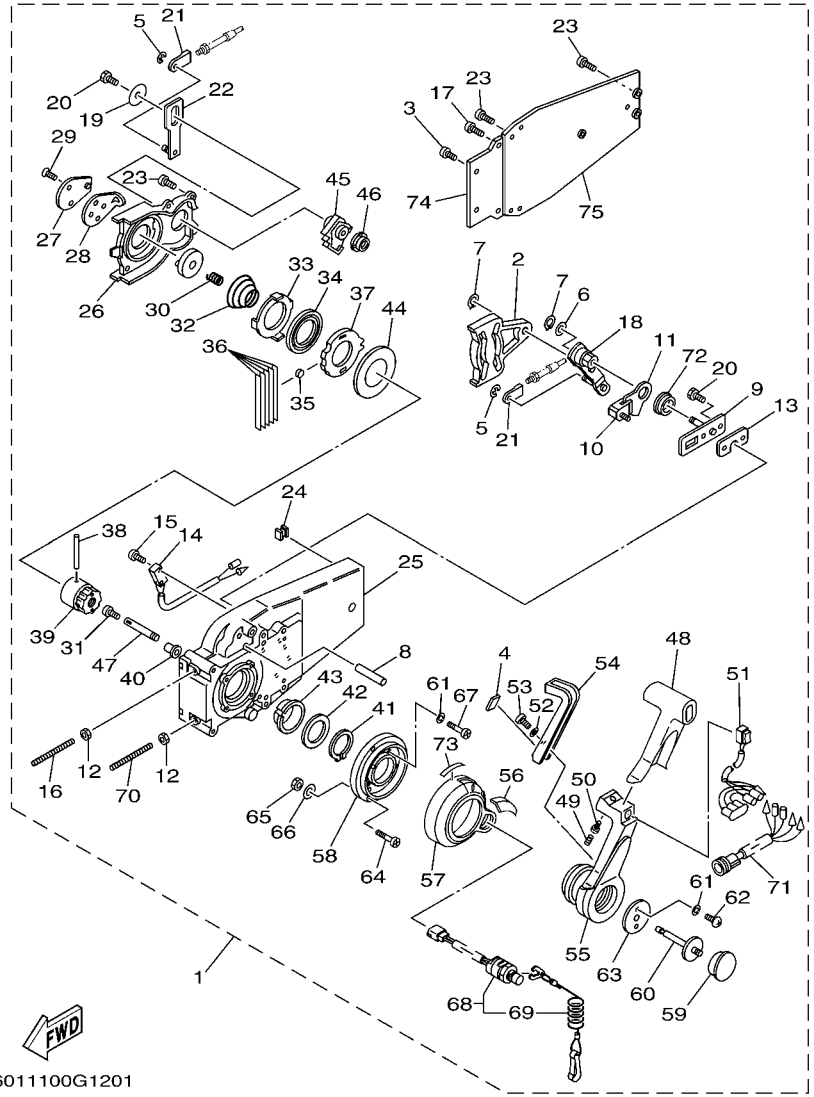

6011100G1201

FIG. 12 REMOTE CONTROL ASSY 8

REF. NO.	PART NO.	DESCRIPTION	601R					REMARKS
1	6X3–48206–01	REMOTE CONTROL ASSY	1					WITH PT/T SW.
2	EL8–48251–00	.PLATE, CAM	1					
3	97890–05016	.SCREW, PAN HEAD	2					
4	6X0–48138–00	.CAP, LOCK ARM	1					
5	93430–06024	.CIRCLIP	3					
6	92990–10600	.WASHER, PLATE	1					
7	EL8–48259–00	.CIRCLIP 1	2					
8	6X0–48265–00	.SHAFT, FRICTION	1					
9	6X0–48262–00	.SHAFT, THROTTLE	1					
10	6X0–48264–00	.THROTTLE, FRICTION	1					
11	6X0–48187–00	.PLATE, ADJUST	1					
12	95380–06600	.NUT, HEXAGON	2					
13	704–48266–00	.SPACER	1					
14	704–82540–00	.NEUTRAL SWITCH ASSY	1					
15	98580–03015	.SCREW, PAN HEAD	2					
16	EL8–48281–00	.SCREW	1					
17	97890–05025	.SCREW, PAN HEAD	2					
18	6X0–48261–00	.ARM, THROTTLE	1					
19	EL8–48191–00	.WASHER 1	1					
20	97380–06018	.BOLT	3					
21	703–48345–01	.CABLE END, REMOTE CONTROL 2	2					
22	EL8–48271–00	.ARM, SHIFT	1					
23	EL8–48127–00	.SCREW 1	11					
24	703–48358–00	.ANCHOR, CABLE	1					
25	6X0–48211–00	.HOUSING,1	1					
26	EL8–48231–00	.HOUSING, GEAR	1					
27	EL8–48241–00	.ARM, DRIVE	1					

6X3 REMOTE CONTROL

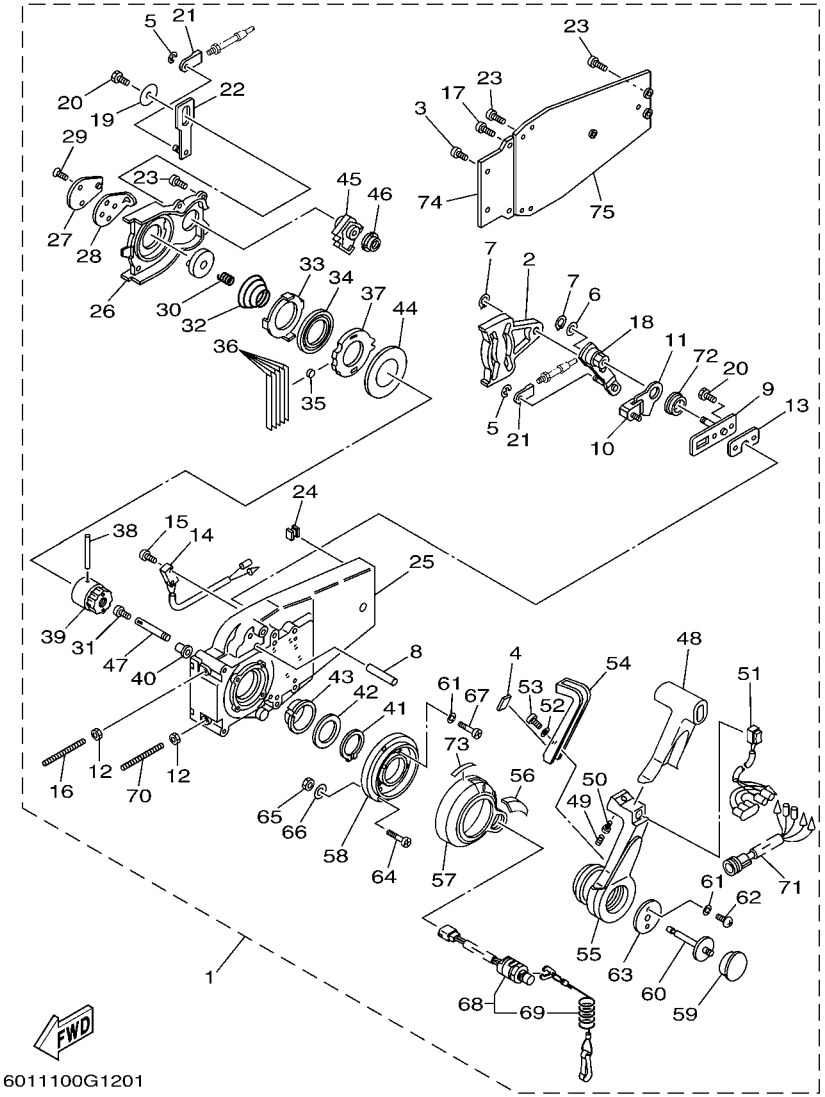

FIG. 12 REMOTE CONTROL ASSY 8

REF. NO.	PART NO.	DESCRIPTION	601R					REMARKS
28	EL8–48254–00	.STOPPER, THROTTLE ADJUSTING	1					
29	92780–06020	.SCREW, FLAT HEAD	2					
30	EL8–48158–00	.SPRING 1	1					
31	98580–04006	.SCREW, PAN HEAD	1					
32	EL8–48244–00	.SPRING, FREE ACCEL.	1					
33	EL8–48245–00	.PLATE, LOCK	1					
34	704–48178–00	.PLATE, SHIFT	1					
35	701–48248–00	.ROLLER, FREE ACCEL.	1					
36	704–48238–00	.SPRING, DETENT	5					
37	6X0–48121–00	.GEAR 1	1					
38	EL8–48164–00	.PIN 2	1					
39	EL8–48242–10	.SHAFT, DRIVE	1					
40	702–48263–00	.BUSHING	1					
41	EL8–48279–00	.CIRCLIP 2	1					
42	704–48193–00	.WASHER 3	1					
43	EL8–48234–00	.BUSHING 1	1					
44	703–48192–00	.WASHER 2	1					
45	EL8–48233–00	.GEAR 2	1					
46	702–48235–00	.BUSHING	1					
47	6X0–48153–00	.SHAFT, FREE ACCEL.	1					
48	6X3–48222–01	.GRIP, CONTROL LEVER	1					
49	703–48227–00	.SPRING, NEUTRAL LOCK	1					
50	98580–05008	.SCREW, PAN HEAD	1					
51	6X3–82563–01	.TRIM & TILT SWITCH ASSY	1					
52	6X0–48288–00	.WASHER, PLAIN	1					
53	6X0–48127–00	.SCREW 1	1					
54	6X0–48223–00	.LOCK, NEUTRAL	1					

6X3 REMOTE CONTROL

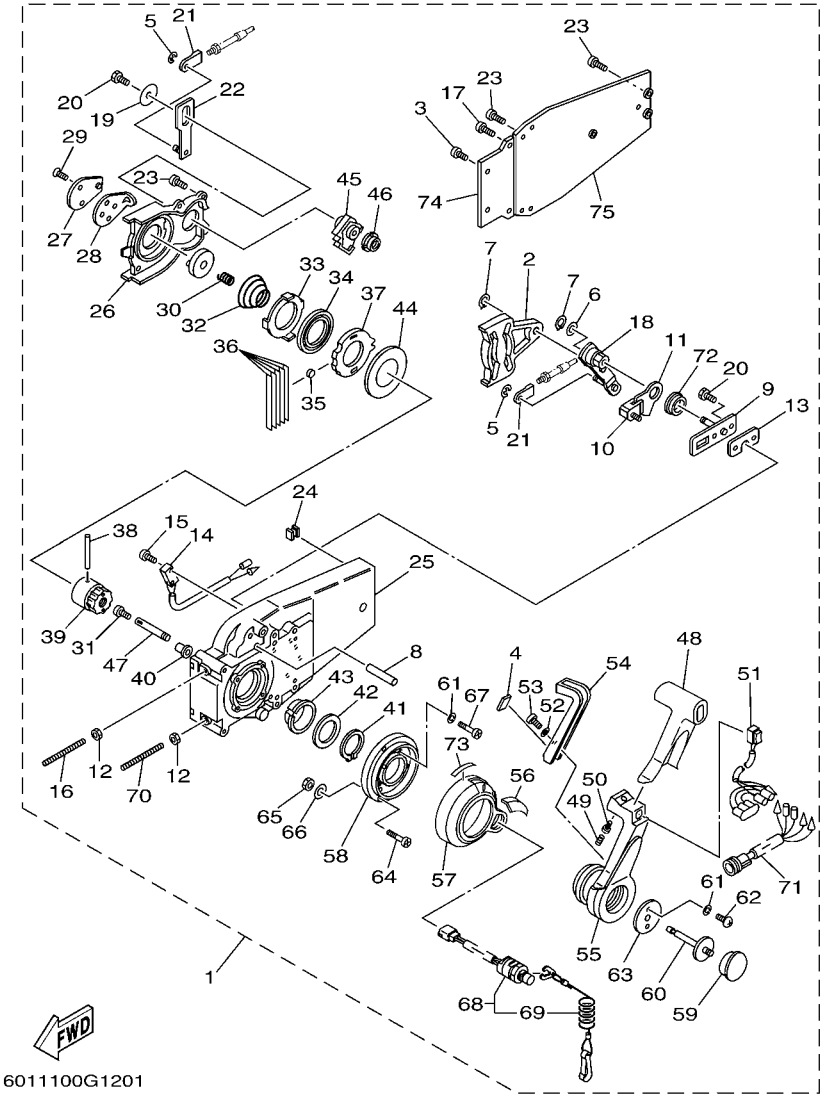

FIG. 12 REMOTE CONTROL ASSY 8

REF. NO.	PART NO.	DESCRIPTION	601R					REMARKS
55	6X3–48221–00	.LEVER, CONTROL	1					
56	6X3–48225–10	.COVER	1					
57	6X3–48225–00	.COVER	1					
58	6X3–48111–00	.BODY, REMOTE CONTROL 1	1					
59	6X3–48225–20	.COVER	1					
60	6X0–48155–00	.PLUNGER	1					
61	92990–05300	.WASHER, INTERNAL TOOTH	6					
62	6X0–48281–00	.SCREW	2					
63	6X0–48193–00	.WASHER 3	1					
64	97890–06035	.SCREW, PAN HEAD	3					UR
	6X0–48128–00	.SCREW(M6X30)	3					UR
65	6X0–48156–00	.NUT 1	3					
66	701–48287–00	.WASHER	3					
67	6X3–48129–00	.SCREW 3	4					
68	6X3–82575–00	.ENGINE STOP SWITCH ASSY	1					
69	682–82556–00	..LANYARD, STOP SWITCH	1					
70	704–48281–00	.SCREW	1					
71	704–82541–10	.WIRE, LEAD	1					
72	6X0–48116–00	.BUSHING	1					
73	6X3–44191–00	.INDICATOR, SHIFT	1					
74	EL8–48212–00	.BACK PLATE 1	1					
75	EL8–48213–00	.BACK PLATE 2	1					

6X5 REMOTE CONTROL (TRIPLE)

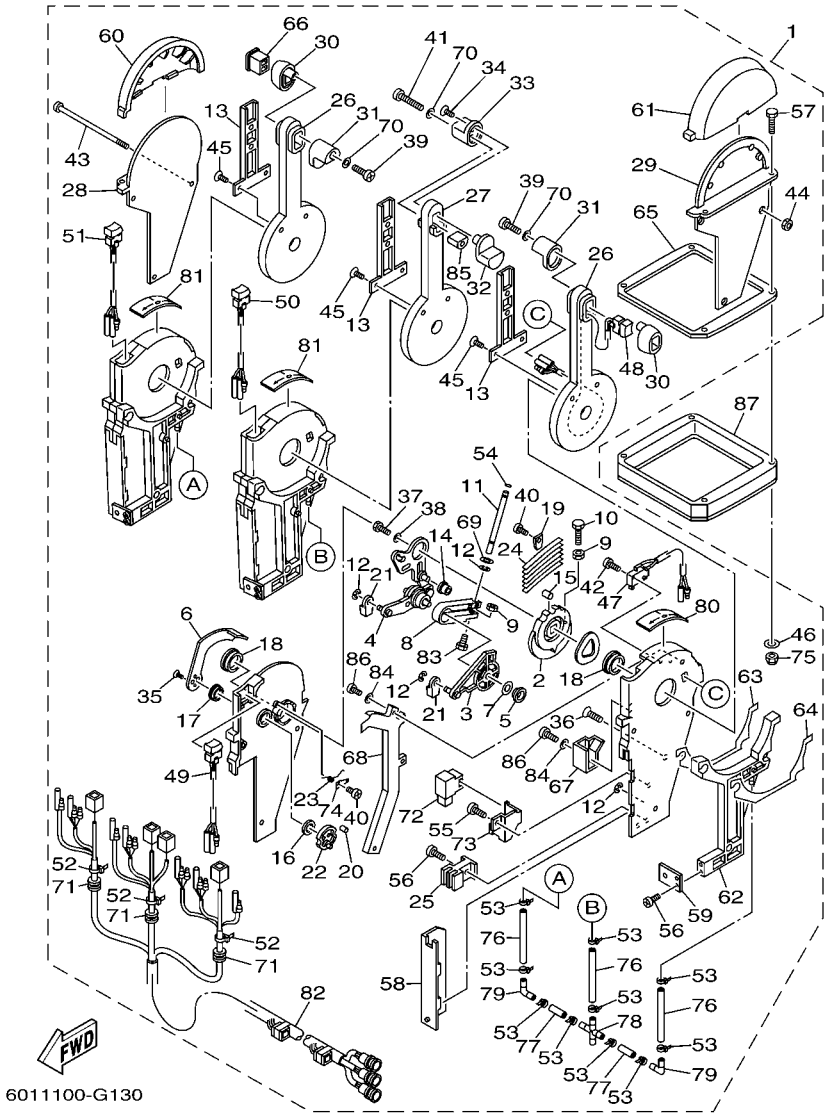

FIG. 13 REMOTE CONTROL ASSY 9

REF. NO.	PART NO.	DESCRIPTION	601R					REMARKS
1	6X5–48207–01	REMOTE CONTROL ASSY	1					WITH PT/T SW.
2	6X5–48232–00	.GEAR	3					
3	6X5–48271–00	.ARM, SHIFT	3					
4	6X5–48261–00	.ARM, THROTTLE	3					
5	703–48235–00	.BUSHING	3					
6	6X5–48152–00	.KNOB, FREE ACCEL.	3					
7	703–48268–00	.SPACER	3					
8	6X5–48264–00	.FRICTION, THROTTLE	3					
9	95380–05600	.NUT	6					
10	97380–05025	.BOLT	3					
11	6X5–48265–00	.SHAFT, FRICTION	3					
12	93430–06024	.CIRCLIP	12					
13	6X5–48224–00	.COVER, CONTROL LEVER	3					
14	703–48252–00	.ROLLER, CAM	3					
15	701–48248–00	.ROLLER, FREE ACCEL.	3					
16	703–48198–00	.WASHER, WAVE	3					
17	703–48243–00	.BUSHING	3					
18	703–48236–00	.BUSHING 1	6					
19	703–48189–00	.RETAINER	3					
20	703–48234–00	.ROLLER, DETENT	3					
21	703–48345–01	.CABLE END, REMOTE CONTROL 2	6					
22	703–48153–00	.SHAFT, FREE ACCEL.	3					
23	703–48244–00	.SPRING, FREE ACCEL.	3					
24	703–48238–00	.SPRING, DETENT	18					
25	6X5–48358–00	.ANCHOR, CABLE	3					
26	6X5–48221–00	.LEVER, CONTROL	2					
27	6X5–48221–10	.LEVER, CONTROL	1					

6X5 REMOTE CONTROL (TRIPLE)

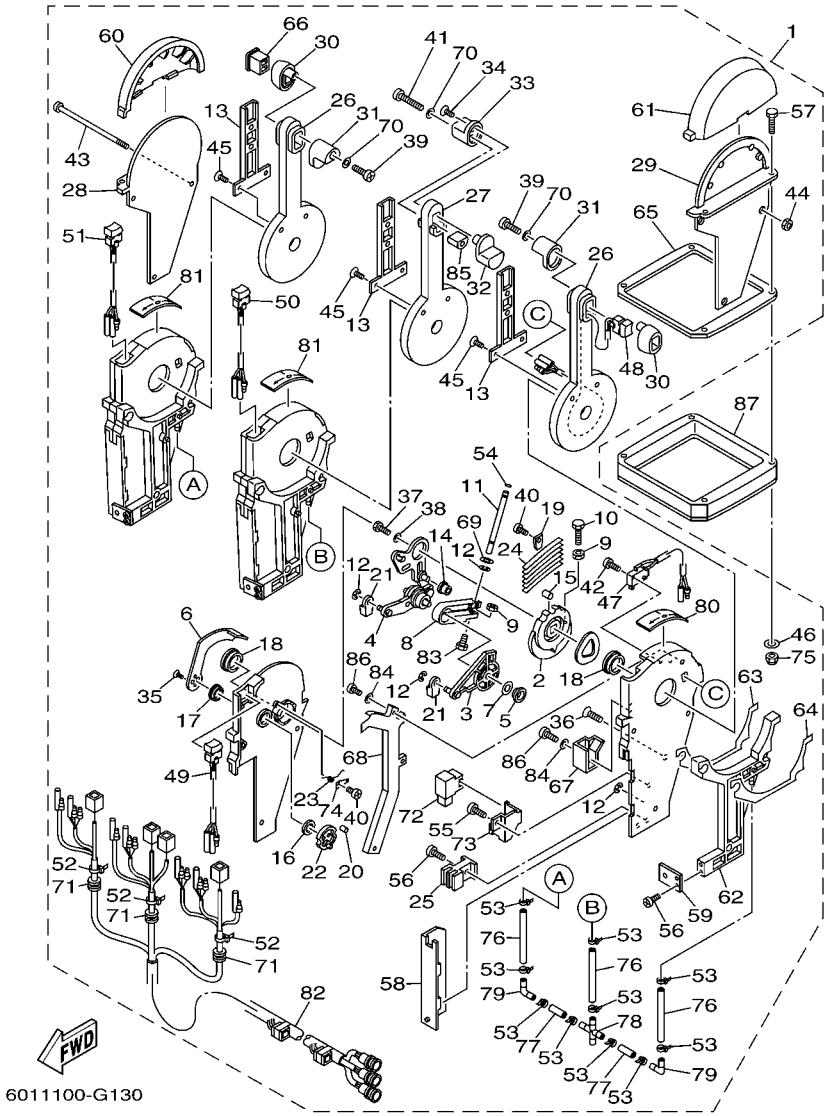

FIG. 13 REMOTE CONTROL ASSY 9

REF. NO.	PART NO.	DESCRIPTION	601R					REMARKS
28	6X5–48144–10	.PLATE, STOPPER 2	1					
29	6X5–48144–00	.PLATE, STOPPER 2	1					
30	6X5–48229–00	.GRIP, CONTROL LEVER	2					
31	6X5–48222–00	.GRIP, CONTROL LEVER	2					
32	6X5–48229–10	.GRIP, CONTROL LEVER	1					
33	6X5–48222–10	.GRIP, CONTROL LEVER	1					
34	6X5–48127–00	.SCREW 1	1					
35	703–48128–00	.SCREW 2	6					
36	6X5–48129–00	.SCREW 3	9					
37	97380–08030	.BOLT	3					
38	92990–08200	.WASHER, PLAIN	3					
39	6X5–48127–10	.SCREW 1	2					
40	98580–04006	.SCREW, PAN HEAD	6					
41	6X5–48127–20	.SCREW 1	1					
42	98580–03015	.SCREW, PAN HEAD	6					
43	6X5–48267–00	.BOLT SET	3					
44	95780–06300	.NUT, FLANGE	3					
45	98780–04010	.SCREW, FLAT HEAD	6					
46	704–48287–00	.WASHER	4					
47	6X5–82540–00	.NEUTRAL SWITCH ASSY	3					
48	6X5–82563–01	.TRIM & TILT SWITCH ASSY	1					
49	6X5–82563–11	.TRIM & TILT SWITCH ASSY	1					
50	6X5–82563–21	.TRIM & TILT SWITCH ASSY	1					
51	6X5–82563–31	.TRIM & TILT SWITCH ASSY	1					
52	703–82591–00	.BAND	3					
53	6X4–42821–00	.BAND, CLAMP	14					
54	6X5–48351–00	.SEAL, RUBBER	3					

6X5 REMOTE CONTROL (TRIPLE)

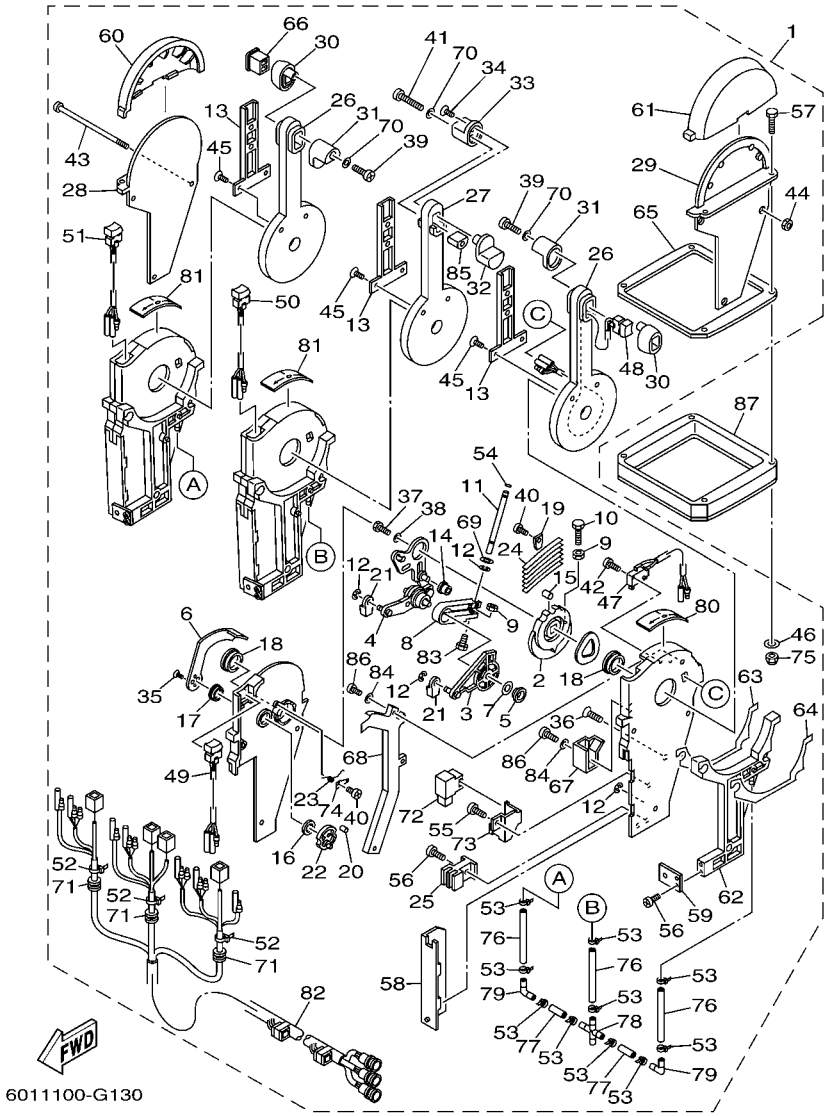

FIG. 13 REMOTE CONTROL ASSY 9

REF. NO.	PART NO.	DESCRIPTION	601R					REMARKS
55	98580–05010	.SCREW, PAN HEAD	3					
56	98580–05012	.SCREW, PAN HEAD	12					
57	98580–05040	.SCREW, PAN HEAD	4					UR
	97780–05130	.SCREW, TAPPING	4					UR
58	6X5–48213–00	.BACK PLATE 2	3					
59	6X5–48354–00	.SET-PLATE, CABLE	3					
60	6X5–48119–10	.COVER	1					
61	6X5–48119–00	.COVER	1					
62	6X5–48246–00	.SPACER	3					
63	6X5–48214–00	.PAD	3					
64	6X5–48214–10	.PAD	3					
65	6X5–48176–00	.GROMMET	1					
66	6X5–48222–20	.GRIP, CONTROL LEVER	1					
67	6X5–48219–00	.COVER, LEAD	3					
68	6X5–48225–00	.COVER	3					
69	92990–08600	.WASHER, PLATE	3					
70	92990–05300	.WASHER, INTERNAL TOOTH	3					
71	6X5–48175–00	.BOOT	3					
72	704–81950–10	.RELAY ASSY	4					
73	6X5–48228–00	.HOLDER, SWITCH	3					
74	703–48246–00	.SPACER	3					
75	95380–06600	.NUT, HEXAGON	4					
76	6X5–48317–00	.TUBE	3					
77	6X5–48317–10	.TUBE	2					
78	6X5–48338–00	.CONNECTOR	1					
79	6X5–48338–10	.CONNECTOR	2					
80	6X5–48215–00	.GRAPHIC	1					

6X5 REMOTE CONTROL (TRIPLE)

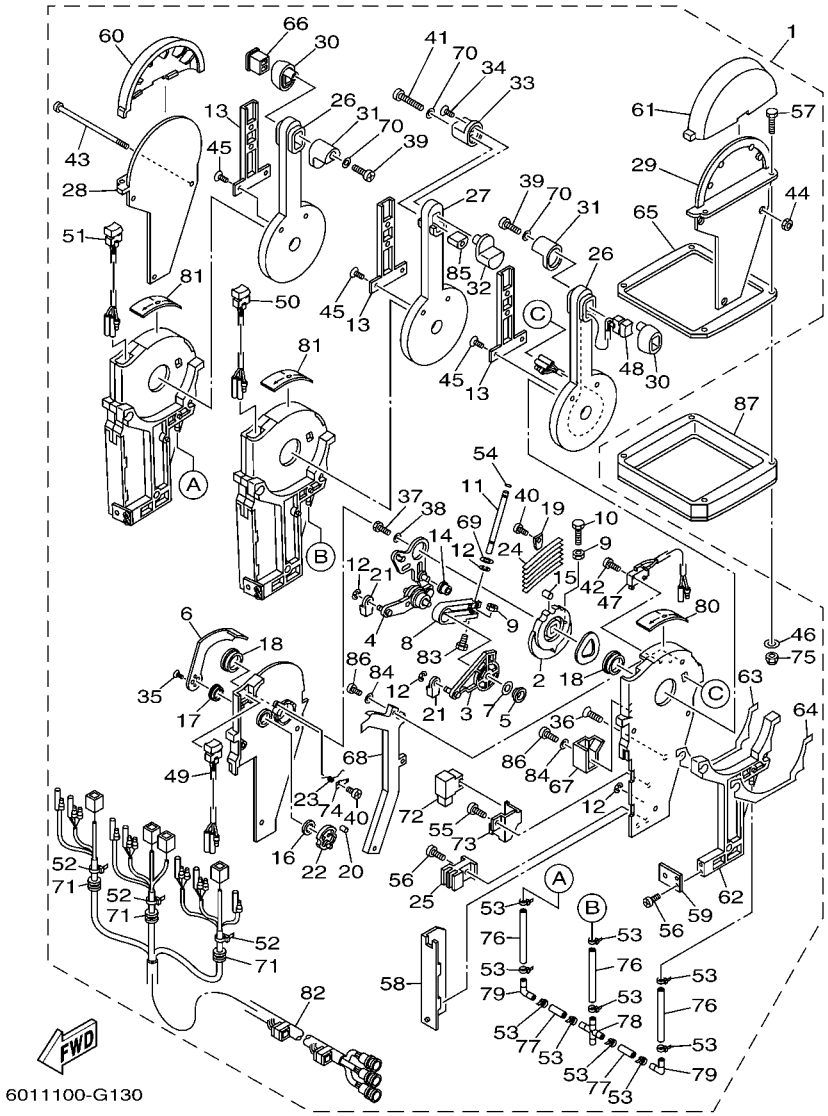

FIG. 13 REMOTE CONTROL ASSY 9

REF. NO.	PART NO.	DESCRIPTION	601R					REMARKS
81	6X5–48215–10	.GRAPHIC	2					
82	6X5–82590–00	.WIRE HARNESS ASSY	1					
83	6X5–48267–00	.BOLT SET	3					
84	92990–05200	.WASHER, PLAIN	15					
85	6X5–48222–30	.GRIP, CONTROL LEVER	1					
86	98580–05012	.SCREW, PAN HEAD	15					
87	6X5–48293–00	SPACER, REMOTE CONTROL	1					LM

FIG. 14 REMOTE CONTROL CABLES

REMOTE CONTROL CABLE

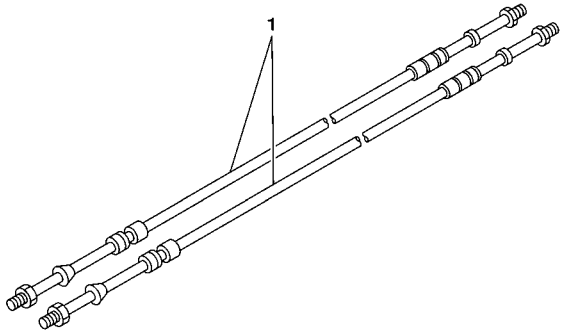

6011100-G140

REF. NO.	PART NO.	DESCRIPTION	601R					REMARKS
1	701–48310–10	CABLE, REMOTE CONTROL L=6F	2					UR
	701–48310–20	CABLE, REMOTE CONTROL L=7F	2					UR
	701–48310–40	CABLE, REMOTE CONTROL L=8F	2					UR
	701–48310–60	CABLE, REMOTE CONTROL L=9F	2					UR
	701–48310–80	CABLE, REMOTE CONTROL L=10F	2					UR
	701–48310–90	CABLE, REMOTE CONTROL L=11F	2					UR
	701–48320–00	CABLE, REMOTE CONTROL L=12F	2					UR
	701–48320–20	CABLE, REMOTE CONTROL L=13F	2					UR
	701–48320–30	CABLE, REMOTE CONTROL L=14F	2					UR
	701–48320–50	CABLE, REMOTE CONTROL L=15F	2					UR
	701–48320–60	CABLE, REMOTE CONTROL L=16F	2					UR
	701–48320–80	CABLE, REMOTE CONTROL L=17F	2					UR
	701–48320–90	CABLE, REMOTE CONTROL L=18F	2					UR
	701–48320–40	CABLE, REMOTE CONTROL L=19F	2					UR
	701–48320–70	CABLE, REMOTE CONTROL L=20F	2					UR
	701–48350–00	CABLE, REMOTE CONTROL L=21F	2					UR
	701–48350–10	CABLE, REMOTE CONTROL L=22F	2					UR
	701–48350–20	CABLE, REMOTE CONTROL L=23F	2					UR
	701–48350–30	CABLE, REMOTE CONTROL L=24F	2					UR
	701–48350–40	CABLE, REMOTE CONTROL L=25F	2					UR
	701–48350–50	CABLE, REMOTE CONTROL L=26F	2					UR
	701–48350–60	CABLE, REMOTE CONTROL L=27F	2					UR

REMOTE CONTROL SPECIFICATION LIST (6X6 TYPE)

TYPE : 6X6	MECHANICAL SPECIFICATION								
TYPE : 6X6	LIST UP SEC.	TYPE CODE	SERIAL NO.	ENGINE			SINGLE STATION	DUAL STATION	
PART NO.	FIG.NO.-REF.NO.			SINGLE	TWIN	TRIPLE		MAIN	SUB
6X6-48205-00	15-1	A	6X6:0000001-	○	*	*	○	*	*
6X6-48205-10		C	6X6:1000001-	○	*	*	*	○	*
6X6-48205-20		G	6X6:3000001-	○	*	*	*	*	○
6X6-48207-00	16-1	B	6X6:0500001-	*	○	*	○	*	*
6X6-48207-10		D	6X6:1500001-	*	○	*	*	○	*
6X6-48207-20		H	6X6:3500001-	*	○	*	*	*	○
6X6-48208-20	17-1	F	6X6:2500001-	*	*	○	*	○	
6X6-48208-30		K	6X6:5000001-	*	*	○	*	*	○

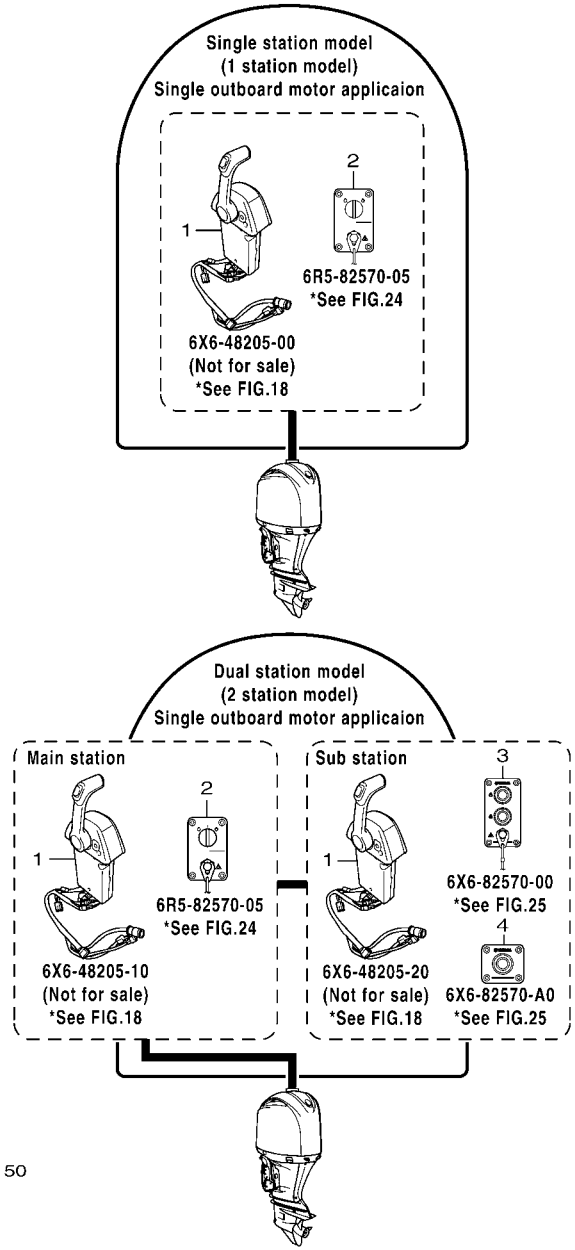

601R10R-H150

FIG. 15 LAYOUT CHART 1 (SINGLE)

REF. NO.	PART NO.	DESCRIPTION	601R					REMARKS
1	6X6–48205–00	REMOTE CONTROL ASSY (SINGLE)	1					NOT FOR SALE
	6X6–48205–10	REMOTE CONTROL ASSY	1					NOT FOR SALE
	6X6–48205–20	REMOTE CONTROL ASSY	1					NOT FOR SALE
2	6R5–82570–05	PANEL SWITCH ASSY	1					1 & 2 STATION MAIN
3	6X6–82570–00	PANEL SWITCH ASSY (SINGLE)	1					2 STATION SUB
4	6X6–82570–A0	PANEL SWITCH ASSY	2					2 STATION SUB

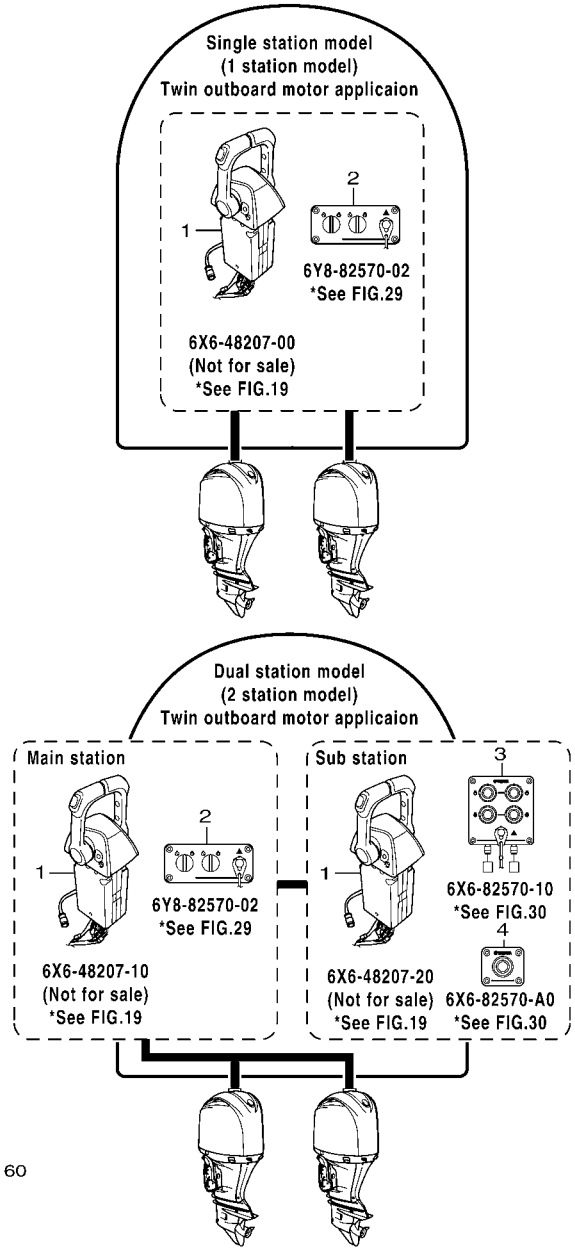

FIG. 16 LAYOUT CHART 2 (TWIN)

REF. NO.	PART NO.	DESCRIPTION	601R					REMARKS
1	6X6–48207–00	REMOTE CONTROL ASSY (TWIN)	1					NOT FOR SALE
	6X6–48207–10	REMOTE CONTROL ASSY	1					NOT FOR SALE
	6X6–48207–20	REMOTE CONTROL ASSY	1					NOT FOR SALE
2	6Y8–82570–02	PANEL SW., TWIN	1					1 & 2 STATION MAIN
3	6X6–82570–10	PANEL SWITCH ASSY (TWIN)	1					2 STATION SUB
4	6X6–82570–A0	PANEL SWITCH ASSY	2					2 STATION SUB

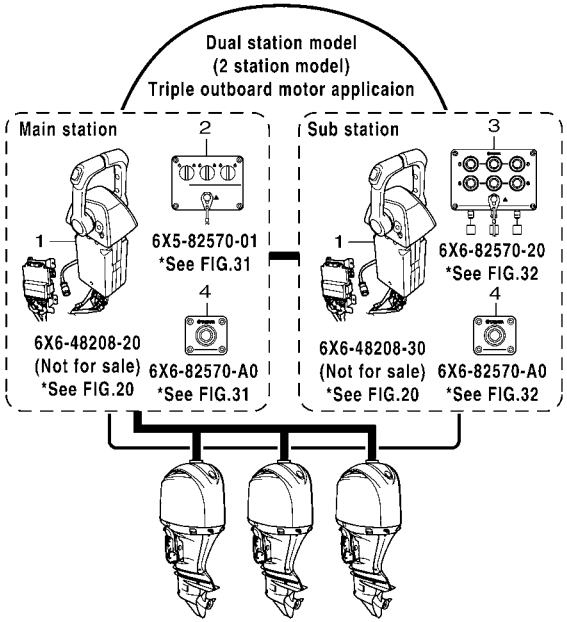

601R10R-H170

FIG. 17 LAYOUT CHART 3 (TRIPLE)

REF. NO.	PART NO.	DESCRIPTION	601R					REMARKS
1	6X6–48208–20	REMOTE CONTROL ASSY	1					NOT FOR SALE
	6X6–48208–30	REMOTE CONTROL ASSY	1					NOT FOR SALE
2	6X5–82570–01	PANEL SWITCH ASSY	1					2 STATION MAIN
3	6X6–82570–20	PANEL SWITCH ASSY	1					2 STATION SUB
4	6X6–82570–A0	PANEL SWITCH ASSY	2					

6X6 REMOTE CONTROL (SINGLE)

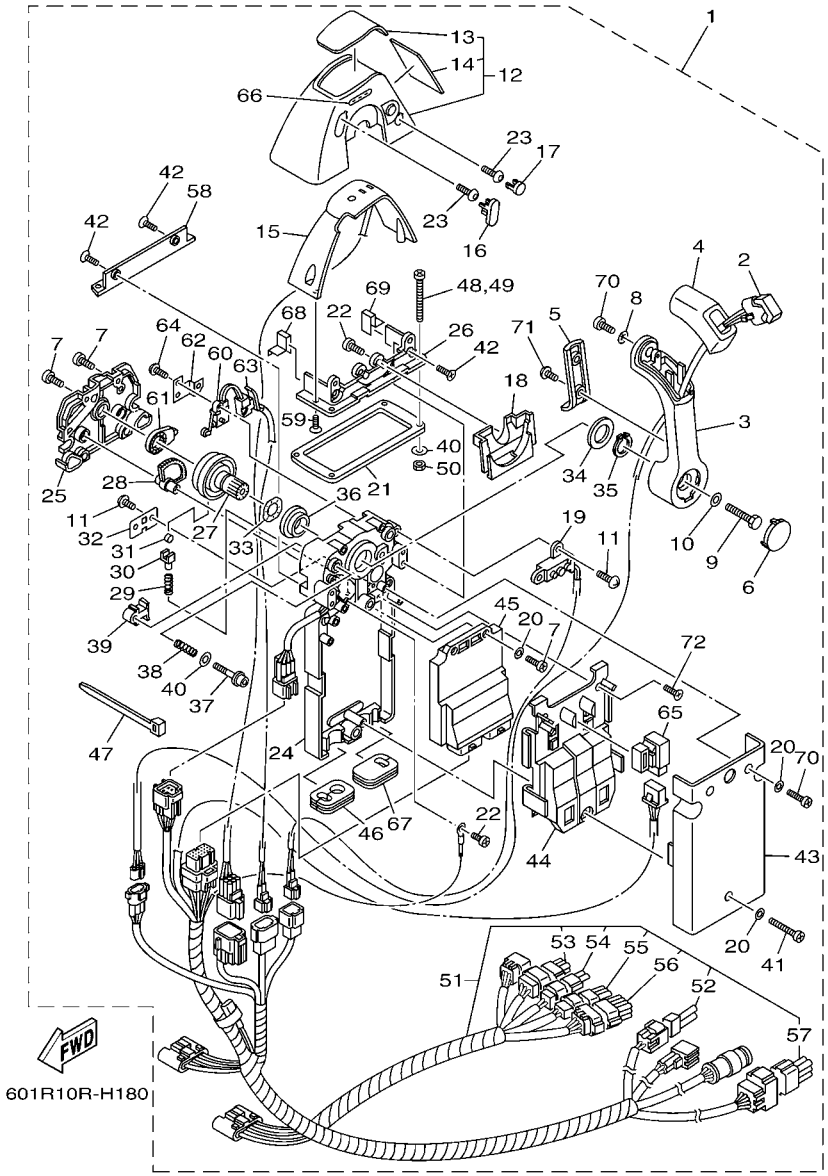

FIG. 18 DBW REMOTE CONTROL 1 (SINGLE)

REF. NO.	PART NO.	DESCRIPTION	601R					REMARKS
1	6X6–48205–00	REMOTE CONTROL ASSY (SINGLE)	1					NOT FOR SALE
	6X6–48205–10	REMOTE CONTROL ASSY	1					NOT FOR SALE
	6X6–48205–20	REMOTE CONTROL ASSY	1					NOT FOR SALE
2	6X6–82563–00	.TRIM & TILT SWITCH ASSY	1					
3	6X6–48221–00	.LEVER, CONTROL	1					
4	6X6–48222–00	.GRIP, CONTROL LEVER	1					
5	6X6–48224–00	.COVER, CONTROL LEVER	1					
6	6X6–48224–10	.COVER, CONTROL LEVER	1					
7	98580–05014	.SCREW, PAN HEAD	6					
8	92990–05300	.WASHER, INTERNAL TOOTH	1					
9	6X6–48171–00	.BOLT	1					
10	92990–08600	.WASHER, PLATE	1					
11	EL8–48127–00	.SCREW 1	4					
12	6X6–48119–03	.COVER	1					
13	6X6–48215–00	..GRAPHIC	1					
14	6X6–48216–00	..GRAPHIC	1					
15	6X6–84301–00	.PILOT LIGHT ASSY 1	1					
16	6X6–48167–00	.PLUG	1					
17	6X6–48167–50	.PLUG	1					
18	6X6–48219–00	.COVER, LEAD	1					
19	6X6–8259E–00	.SWITCH ASSY	1					
20	92990–05200	.WASHER, PLAIN	5					
21	6X6–48176–00	.GROMMET	1					
22	98580–04010	.SCREW, PAN HEAD	3					
23	92D80–05016	.BOLT, SOCKET HEAD	2					
24	6X6–481A0–01	.REMO-CON. CASE ASSY	1					
25	6X6–48212–00	.BACK PLATE 1	1					

6X6 REMOTE CONTROL (SINGLE)

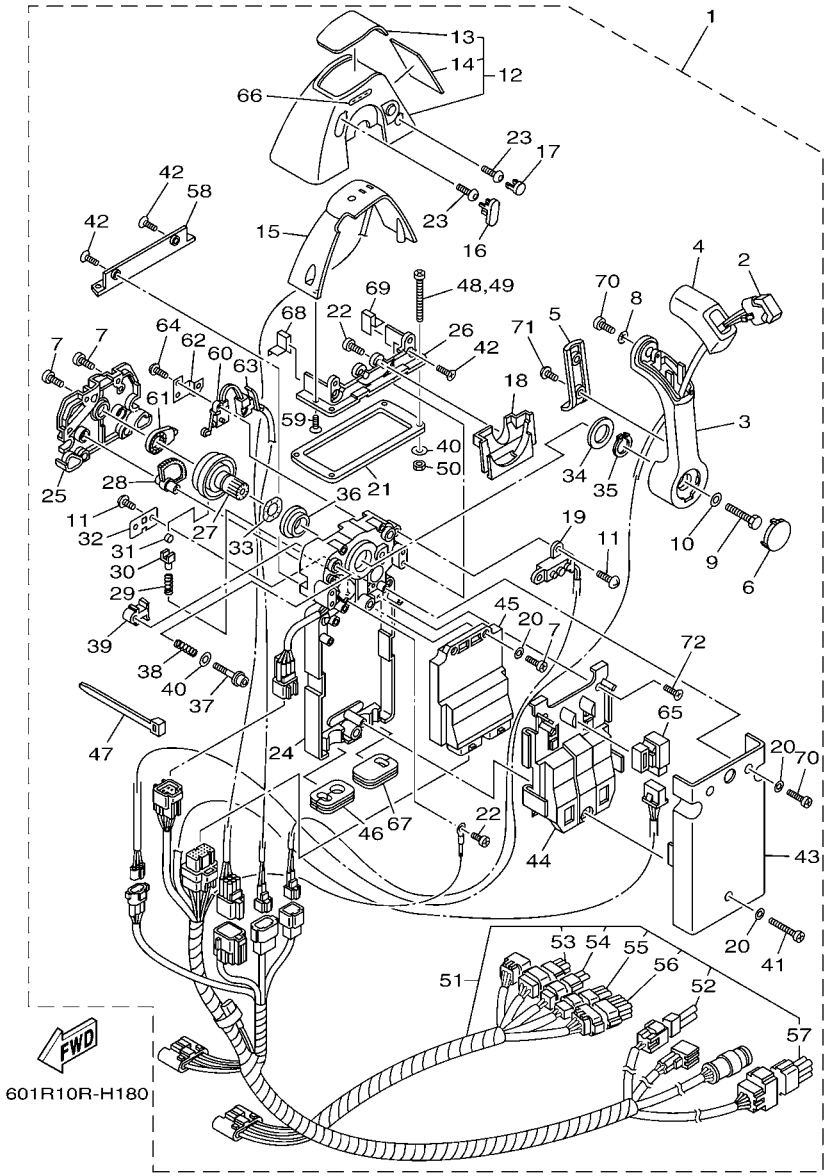

FIG. 18 DBW REMOTE CONTROL 1 (SINGLE)

REF. NO.	PART NO.	DESCRIPTION	601R					REMARKS
26	6X6–48144–10	.PLATE, STOPPER 2	1					
27	6X6–48242–01	.SHAFT, DRIVE	1					
28	6X6–48233–01	.GEAR 2	1					
29	6X6–48238–00	.SPRING, DETENT	1					
30	6X6–48237–00	.ADAPTOR	1					
31	6X6–48236–00	.ROLLER, DETENT	1					
32	6X6–48189–00	.RETAINER	1					
33	703–48198–00	.WASHER, WAVE	1					
34	6X6–48193–00	.WASHER 3	1					
35	6X6–48118–00	.CLIP, SHIFT LEVER	1					
36	6X6–48234–00	.BUSHING 1	1					
37	6X6–48267–00	.BOLT SET	1					
38	6X6–48158–00	.SPRING 1	1					
39	6X6–48264–00	.FRICTION, THROTTLE	1					
40	704–48287–00	.WASHER	5					
41	6X6–81145–00	.SCREW 1	1					
42	98780–05014	.SCREW, FLAT HEAD	4					
43	6X6–48213–00	.BACK PLATE 2	1					
44	6X6–48228–00	.HOLDER, SWITCH	1					
45	6X6–85590–10	.CONTROL UNIT ASSY	1					1 STATION
	6X6–85590–00	.CONTROL UNIT ASSY	1					2 STATION
46	6X6–48175–00	.BOOT	1					1 STATION
	6X6–48175–00	.BOOT	2					2 STATION
47	703–82591–00	.BAND	3					1 STATION
	703–82591–00	.BAND	4					2 STATION
48	97780–50145	.SCREW, TAPPING	4					
49	98580–05060	.SCREW, PAN HEAD	4					

6X6 REMOTE CONTROL (SINGLE)

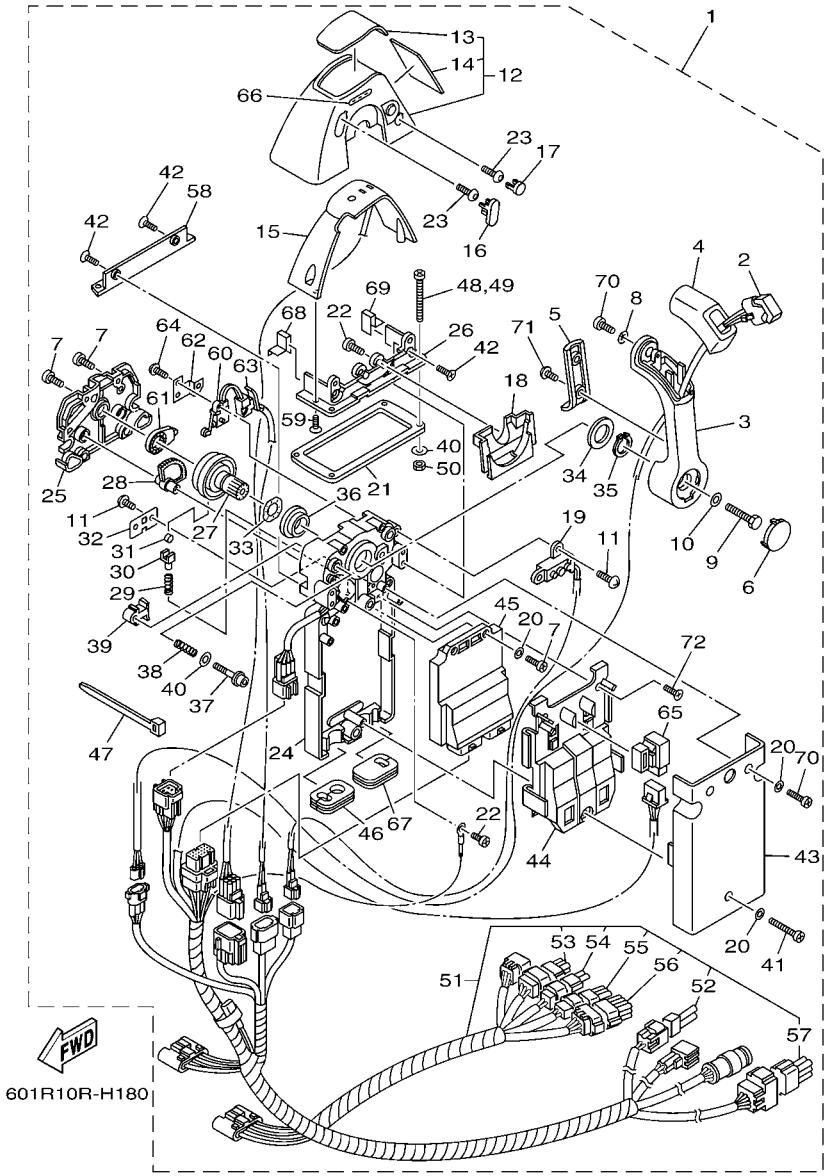

FIG. 18 DBW REMOTE CONTROL 1 (SINGLE)

REF. NO.	PART NO.	DESCRIPTION	601R					REMARKS
50	95380–05600	.NUT	4					
51	6X6–82590–00	.WIRE HARNESS ASSY	1					1 STATION
	6X6–82590–20	.WIRE HARNESS ASSY	1					2 STATION MAIN
	6X6–82590–50	.WIRE HARNESS ASSY	1					2 STATION SUB
52	6X6–82585–20	..CAP 2 (2P)	1					
53	6X6–82582–60	..CAP 1 (6P)	1					FOR 6X6-82590-20
54	6X6–82582–40	..CAP 1 (4P)	1					FOR 6X6-82590-20
55	6X6–82582–30	..CAP 1 (3P)	1					FOR 6X6-82590-20
56	6X6–82582–B0	..CAP 1 (12P)	1					FOR 6X6-82590-20
57	6X6–8257Y–60	..CAP (6P)	1					FOR 6X6-82590-20
58	6X6–48144–00	.PLATE, STOPPER 2	1					
59	6X6–48129–00	.SCREW 3	2					
60	6X6–82540–00	.NEUTRAL SWITCH ASSY	1					
61	6X6–48241–00	.ARM, DRIVE	1					
62	6X6–48245–01	.PLATE, LOCK	1					
63	6X6–82545–00	.GROMMET	1					
64	6X6–8252V–00	.SCREW, SPECIAL	2					
65	704–81950–10	.RELAY ASSY	1					
66	6X6–44191–00	.INDICATOR, SHIFT	1					
67	6X6–48175–10	.BOOT	1					1 STATION ONLY
68	6X6–48176–50	.GROMMET	1					
69	6X6–48176–60	.GROMMET	1					
70	6X6–48127–00	.SCREW 1	3					
71	6X6–48128–00	.SCREW 2	2					
72	6X6–81146–00	.SCREW 2	2					

6X6 REMOTE CONTROL (TWIN)

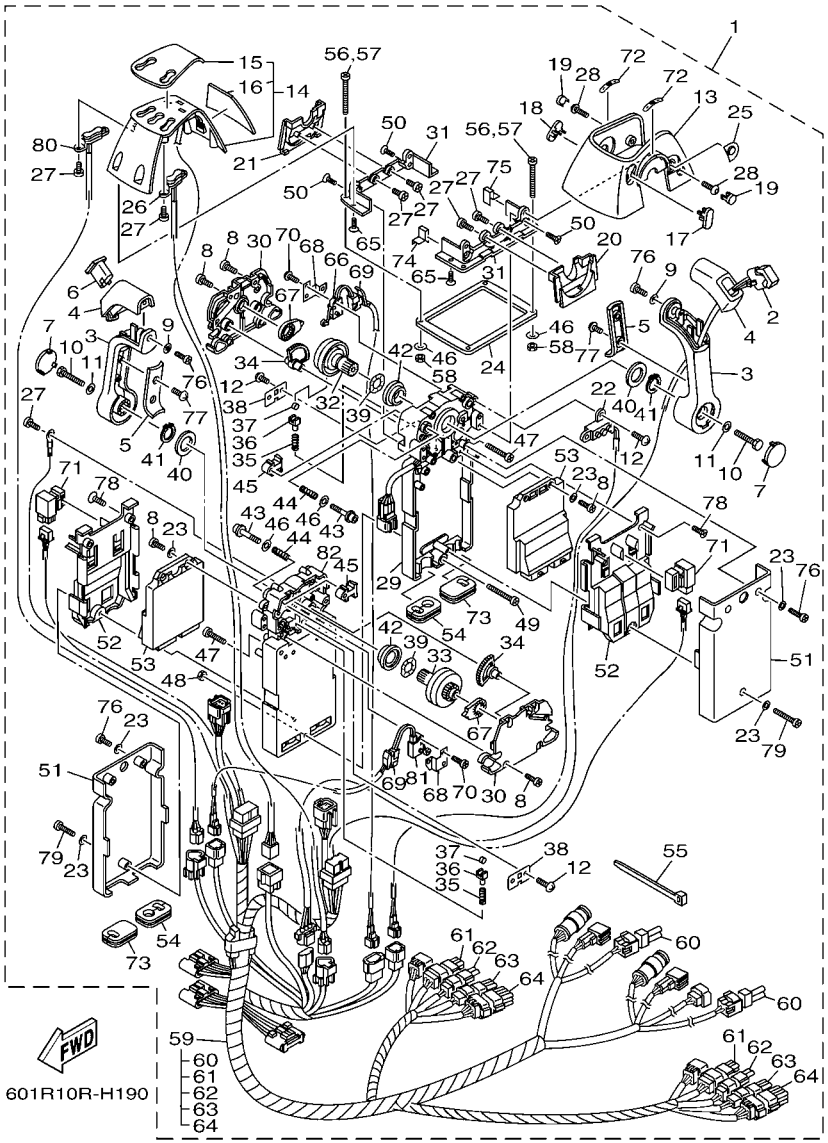

FIG. 19 DBW REMOTE CONTROL 2 (TWIN)

REF. NO.	PART NO.	DESCRIPTION	601R					REMARKS
1	6X6–48207–00	REMOTE CONTROL ASSY (TWIN)	1					NOT FOR SALE
	6X6–48207–10	REMOTE CONTROL ASSY	1					NOT FOR SALE
	6X6–48207–20	REMOTE CONTROL ASSY	1					NOT FOR SALE
2	6X6–82563–00	.TRIM & TILT SWITCH ASSY	1					
3	6X6–48221–00	.LEVER, CONTROL	2					
4	6X6–48222–00	.GRIP, CONTROL LEVER	2					
5	6X6–48224–00	.COVER, CONTROL LEVER	2					
6	6X6–48222–10	.GRIP, CONTROL LEVER	1					
7	6X6–48224–10	.COVER, CONTROL LEVER	2					
8	98580–05014	.SCREW, PAN HEAD	12					
9	92990–05300	.WASHER, INTERNAL TOOTH	2					
10	6X6–48171–00	.BOLT	2					
11	92990–08600	.WASHER, PLATE	2					
12	EL8–48127–00	.SCREW 1	6					
13	6X6–48119–10	.COVER	1					
14	6X6–84301–12	.PILOT LIGHT ASSY 1	1					
15	6X6–48215–10	..GRAPHIC	1					
16	6X6–48216–10	..GRAPHIC	1					
17	6X6–48167–10	.PLUG	1					
18	6X6–48167–20	.PLUG	1					
19	6X6–48167–60	.PLUG	2					
20	6X6–48219–10	.COVER, LEAD	1					
21	6X6–48219–20	.COVER, LEAD	1					
22	6X6–8259E–00	.SWITCH ASSY	1					
23	92990–05200	.WASHER, PLAIN	10					
24	6X6–48176–10	.GROMMET	1					
25	6X6–48225–00	.COVER	1					

6X6 REMOTE CONTROL (TWIN)

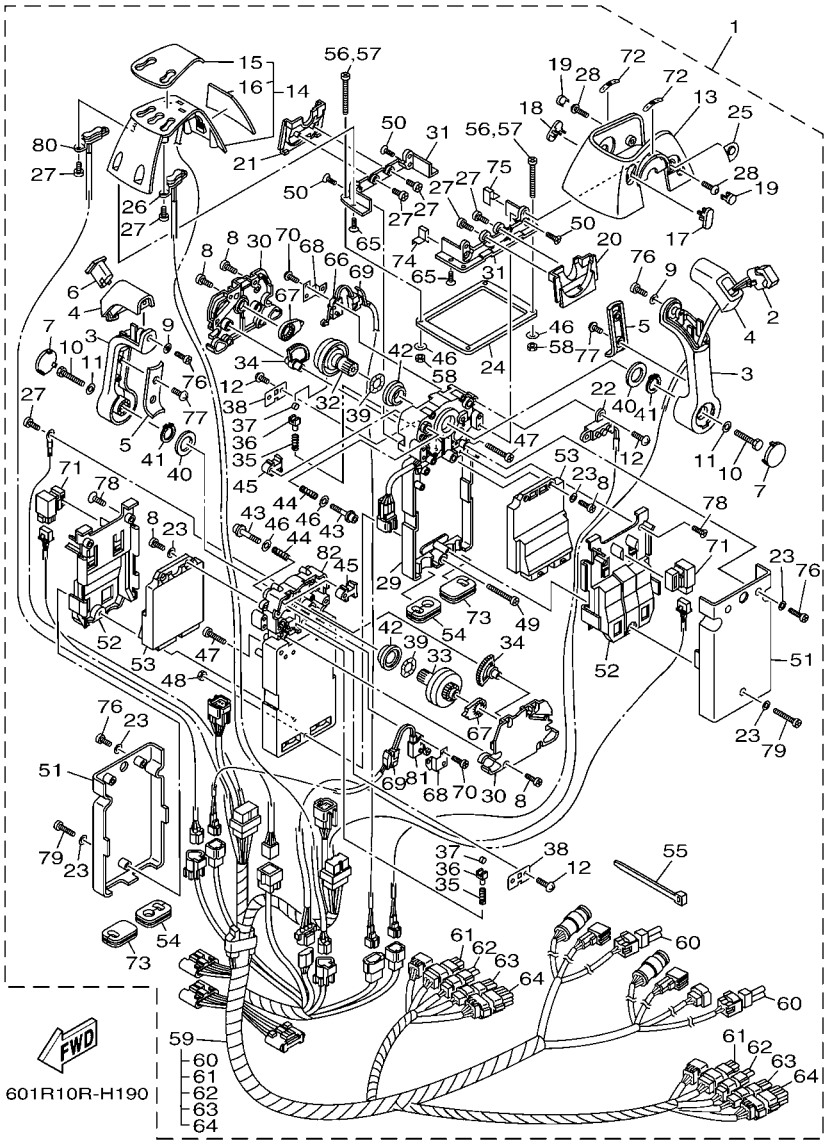

FIG. 19 DBW REMOTE CONTROL 2 (TWIN)

REF. NO.	PART NO.	DESCRIPTION	601R					REMARKS
26	6X6–82563–10	.TRIM & TILT SWITCH ASSY	1					
27	98580–04010	.SCREW, PAN HEAD	9					
28	92D80–05016	.BOLT, SOCKET HEAD	2					
29	6X6–481A0–01	.REMO-CON. CASE ASSY	1					
30	6X6–48212–00	.BACK PLATE 1	2					
31	6X6–48144–10	.PLATE, STOPPER 2	2					
32	6X6–48242–01	.SHAFT, DRIVE	1					
33	6X6–48242–11	.SHAFT, DRIVE	1					
34	6X6–48233–01	.GEAR 2	2					
35	6X6–48238–00	.SPRING, DETENT	2					
36	6X6–48237–00	.ADAPTOR	2					
37	6X6–48236–00	.ROLLER, DETENT	2					
38	6X6–48189–00	.RETAINER	2					
39	703–48198–00	.WASHER, WAVE	2					
40	6X6–48193–00	.WASHER 3	2					
41	6X6–48118–00	.CLIP, SHIFT LEVER	2					
42	6X6–48234–00	.BUSHING 1	2					
43	6X6–48267–00	.BOLT SET	2					
44	6X6–48158–00	.SPRING 1	2					
45	6X6–48264–00	.FRICTION, THROTTLE	2					
46	704–48287–00	.WASHER	6					
47	98580–05025	.SCREW, PAN HEAD	2					
48	704–48156–00	.NUT 1	1					
49	704–48283–00	.SCREW	1					
50	98780–05014	.SCREW, FLAT HEAD	4					
51	6X6–48213–00	.BACK PLATE 2	2					
52	6X6–48228–00	.HOLDER, SWITCH	2					

6X6 REMOTE CONTROL (TWIN)

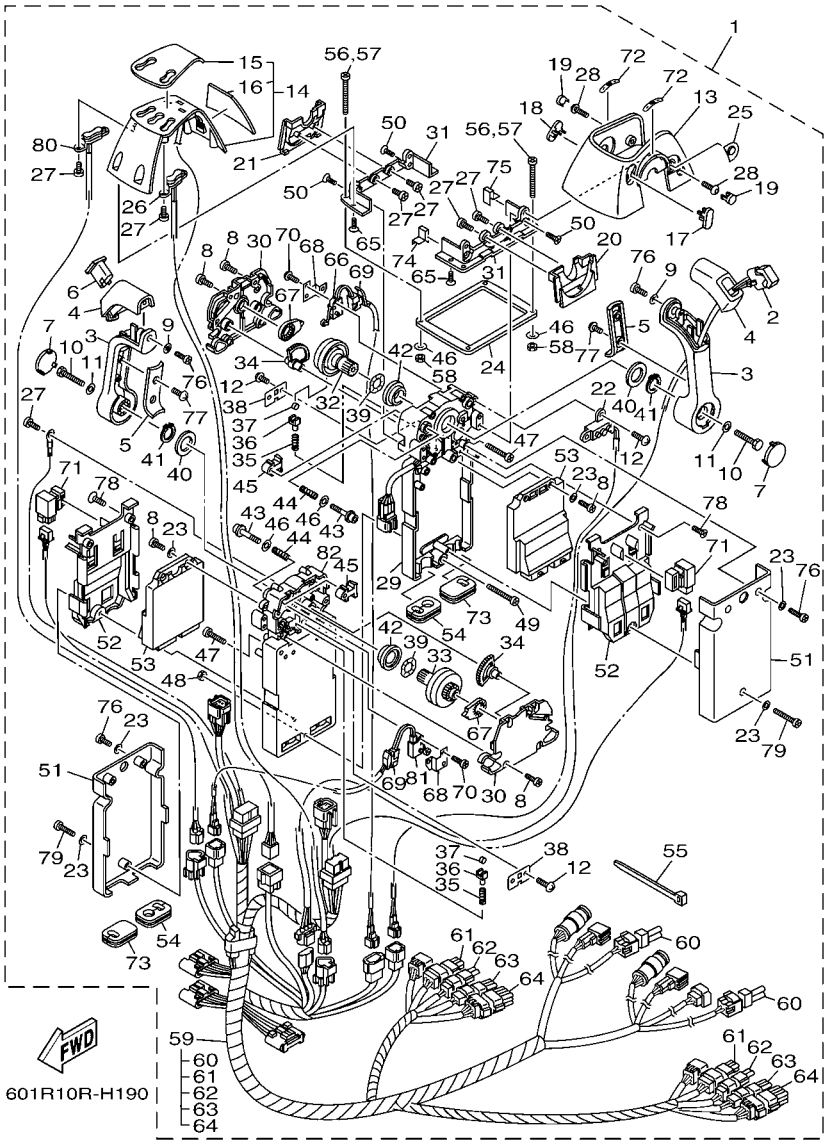

FIG. 19 DBW REMOTE CONTROL 2 (TWIN)

REF. NO.	PART NO.	DESCRIPTION	601R					REMARKS
53	6X6–85590–10	.CONTROL UNIT ASSY	2					1 STATION
	6X6–85590–00	.CONTROL UNIT ASSY	2					2 STATION
54	6X6–48175–00	.BOOT	2					1 STATION
	6X6–48175–00	.BOOT	4					2 STATION
55	703–82591–00	.BAND	6					1 STATION
	703–82591–00	.BAND	8					2 STATION
56	97780–50145	.SCREW, TAPPING	4					
57	98580–05060	.SCREW, PAN HEAD	4					
58	95380–05600	.NUT	4					
59	6X6–82590–10	.WIRE HARNESS ASSY	1					1 STATION
	6X6–82590–30	.WIRE HARNESS ASSY	1					2 STATION MAIN
	6X6–82590–60	.WIRE HARNESS ASSY	1					2 STATION SUB
60	6X6–82585–20	..CAP 2 (2P)	2					
61	6X6–82582–60	..CAP 1 (6P)	2					FOR 6X6-82590-30
62	6X6–82582–40	..CAP 1 (4P)	2					FOR 6X6-82590-30
63	6X6–82582–30	..CAP 1 (3P)	2					FOR 6X6-82590-30
64	6X6–82582–B0	..CAP 1 (12P)	2					FOR 6X6-82590-30
65	6X6–48129–00	.SCREW 3	4					
66	6X6–82540–00	.NEUTRAL SWITCH ASSY	1					
67	6X6–48241–00	.ARM, DRIVE	2					
68	6X6–48245–01	.PLATE, LOCK	2					
69	6X6–82545–00	.GROMMET	2					
70	6X6–8252V–00	.SCREW, SPECIAL	4					
71	704–81950–10	.RELAY ASSY	2					
72	6X6–44191–00	.INDICATOR, SHIFT	2					
73	6X6–48175–10	.BOOT	2					1 STATION ONLY
74	6X6–48176–50	.GROMMET	1					

FIG. 19 DBW REMOTE CONTROL 2 (TWIN)

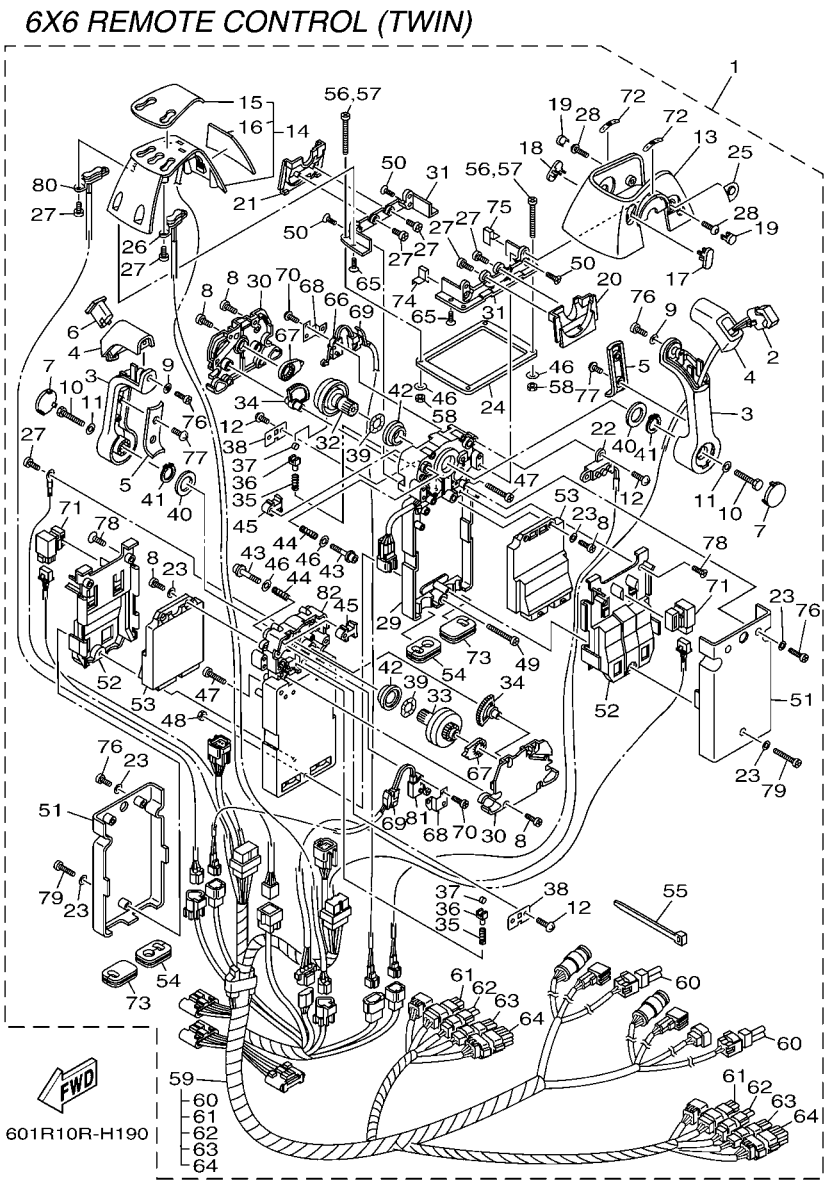

REF. NO.	PART NO.	DESCRIPTION	601R					REMARKS
75	6X6–48176–60	.GROMMET	1					
76	6X6–48127–00	.SCREW 1	6					
77	6X6–48128–00	.SCREW 2	4					
78	6X6–81146–00	.SCREW 2	4					
79	6X6–81145–00	.SCREW 1	2					
80	6X6–82563–20	.TRIM & TILT SWITCH ASSY	1					
81	6X6–82540–10	.NEUTRAL SWITCH ASSY	1					
82	6X6–481A0–21	.REMO-CON. CASE ASSY	1					

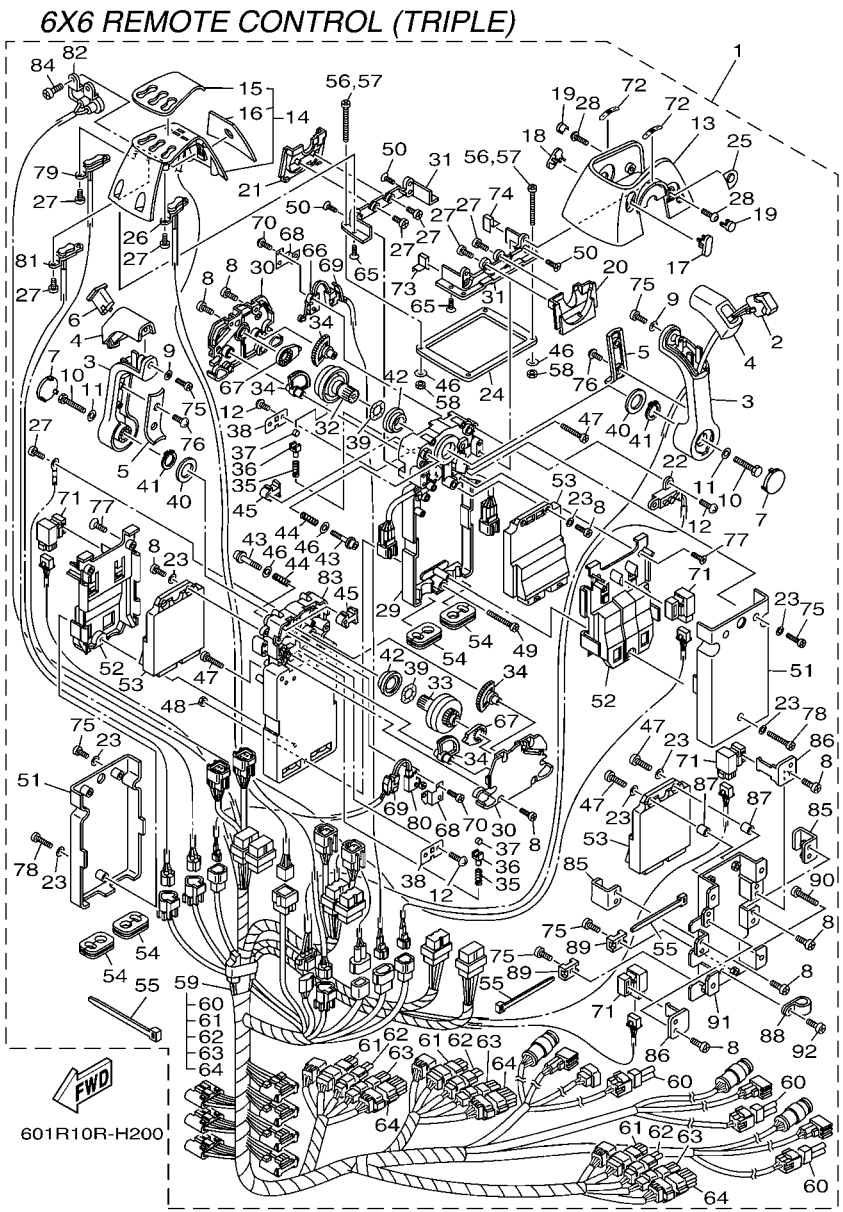

FIG. 20 DBW REMOTE CONTROL 3 (TRIPLE)

REF. NO.	PART NO.	DESCRIPTION	601R					REMARKS
1	6X6–48208–20	REMOTE CONTROL ASSY	1					NOT FOR SALE
	6X6–48208–30	REMOTE CONTROL ASSY	1					NOT FOR SALE
2	6X6–82563–00	.TRIM & TILT SWITCH ASSY	1					
3	6X6–48221–00	.LEVER, CONTROL	2					
4	6X6–48222–00	.GRIP, CONTROL LEVER	2					
5	6X6–48224–00	.COVER, CONTROL LEVER	2					
6	6X6–48222–10	.GRIP, CONTROL LEVER	1					
7	6X6–48224–10	.COVER, CONTROL LEVER	2					
8	98580–05014	.SCREW, PAN HEAD	20					
9	92990–05300	.WASHER, INTERNAL TOOTH	2					
10	6X6–48171–00	.BOLT	2					
11	92990–08600	.WASHER, PLATE	2					
12	EL8–48127–00	.SCREW 1	6					
13	6X6–48119–10	.COVER	1					
14	6X6–84301–22	.PILOT LIGHT ASSY 1	1					
15	6X6–48215–20	..GRAPHIC	1					
16	6X6–48216–20	..GRAPHIC	1					
17	6X6–48167–10	.PLUG	1					
18	6X6–48167–20	.PLUG	1					
19	6X6–48167–60	.PLUG	2					
20	6X6–48219–10	.COVER, LEAD	1					
21	6X6–48219–20	.COVER, LEAD	1					
22	6X6–8259E–00	.SWITCH ASSY	1					
23	92990–05200	.WASHER, PLAIN	12					
24	6X6–48176–10	.GROMMET	1					
25	6X6–48225–00	.COVER	1					
26	6X6–82563–10	.TRIM & TILT SWITCH ASSY	1					

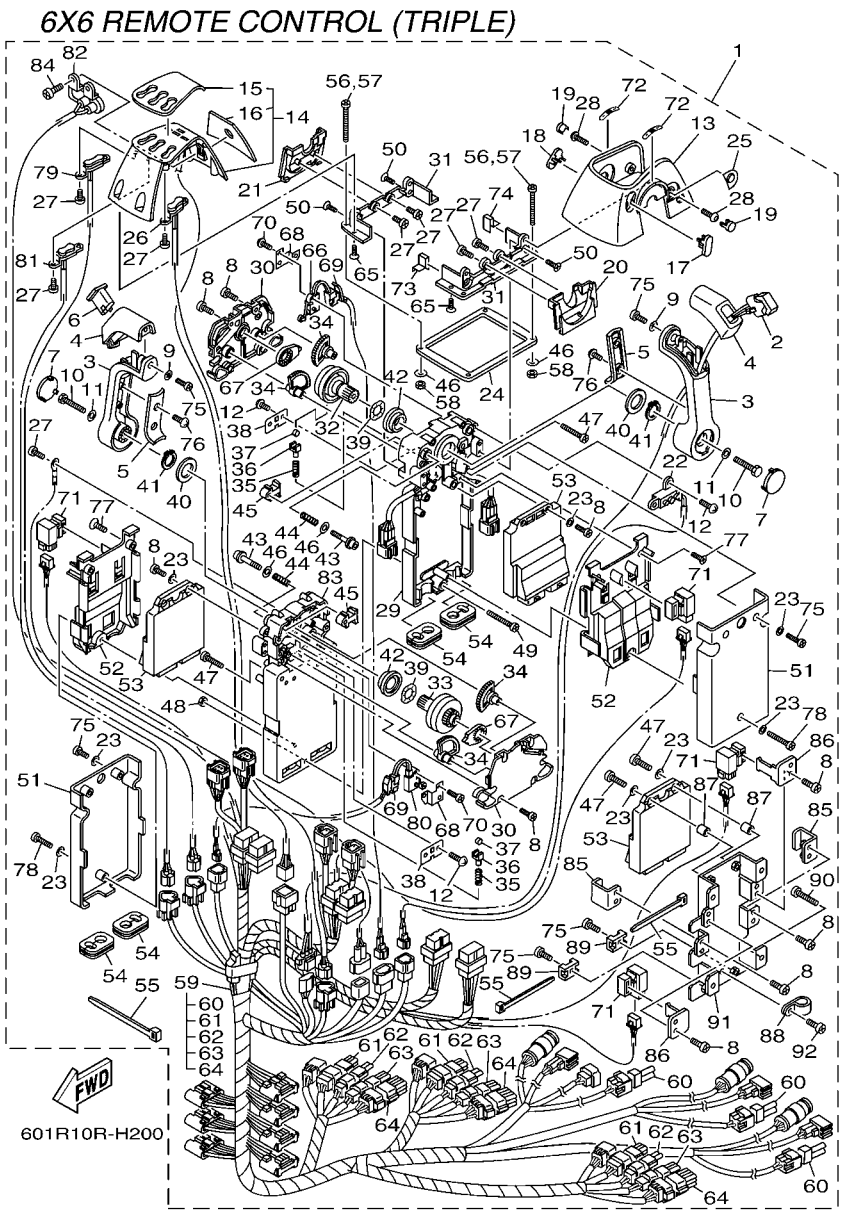

FIG. 20 DBW REMOTE CONTROL 3 (TRIPLE)

REF. NO.	PART NO.	DESCRIPTION	601R					REMARKS
27	98580–04010	.SCREW, PAN HEAD	11					
28	92D80–05016	.BOLT, SOCKET HEAD	2					
29	6X6–481A0–11	.REMO-CON. CASE ASSY	1					
30	6X6–48212–00	.BACK PLATE 1	2					
31	6X6–48144–10	.PLATE, STOPPER 2	2					
32	6X6–48242–01	.SHAFT, DRIVE	1					
33	6X6–48242–11	.SHAFT, DRIVE	1					
34	6X6–48233–01	.GEAR 2	4					
35	6X6–48238–00	.SPRING, DETENT	2					
36	6X6–48237–00	.ADAPTOR	2					
37	6X6–48236–00	.ROLLER, DETENT	2					
38	6X6–48189–00	.RETAINER	2					
39	703–48198–00	.WASHER, WAVE	2					
40	6X6–48193–00	.WASHER 3	2					
41	6X6–48118–00	.CLIP, SHIFT LEVER	2					
42	6X6–48234–00	.BUSHING 1	2					
43	6X6–48267–00	.BOLT SET	2					
44	6X6–48158–00	.SPRING 1	2					
45	6X6–48264–00	.FRICTION, THROTTLE	2					
46	704–48287–00	.WASHER	6					
47	98580–05025	.SCREW, PAN HEAD	4					
48	704–48156–00	.NUT 1	1					
49	704–48283–00	.SCREW	1					
50	98780–05014	.SCREW, FLAT HEAD	4					
51	6X6–48213–00	.BACK PLATE 2	2					
52	6X6–48228–00	.HOLDER, SWITCH	2					
53	6X6–85590–00	.CONTROL UNIT ASSY	3					

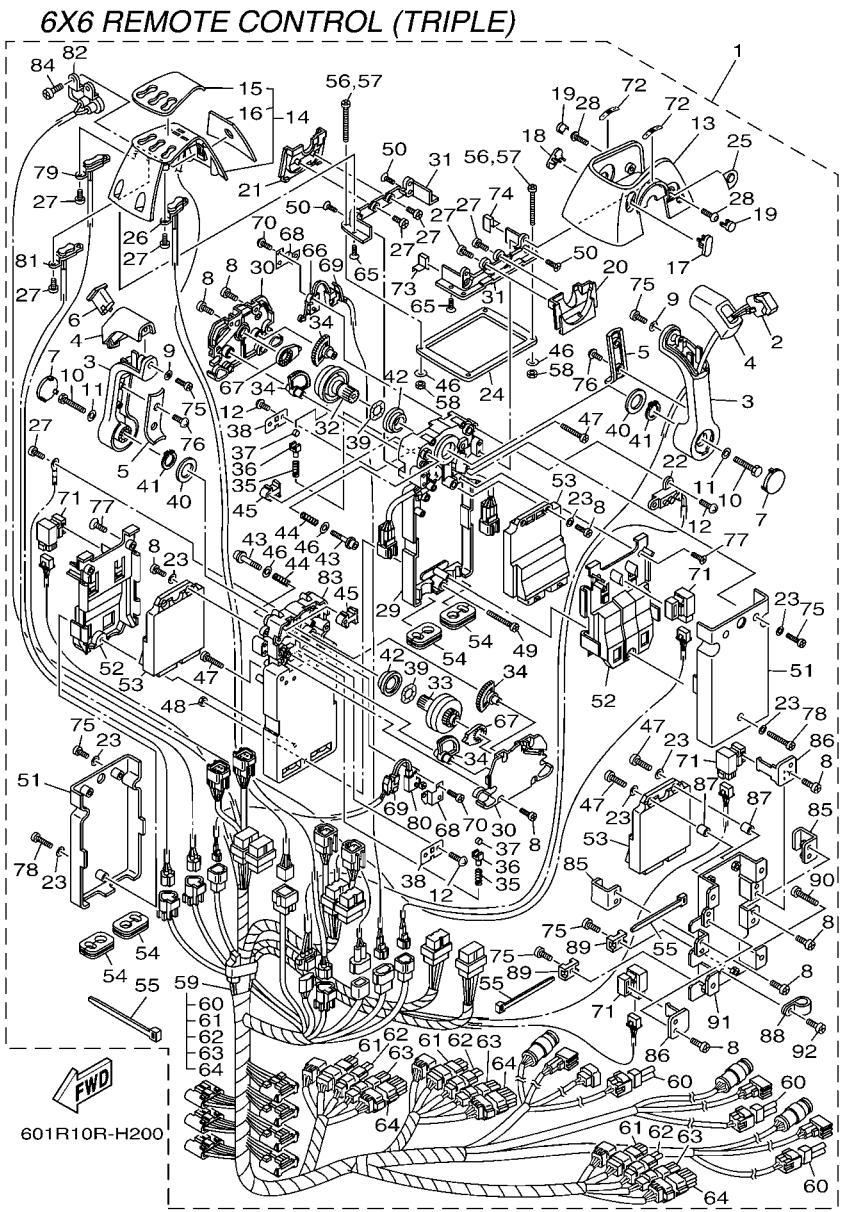

FIG. 20 DBW REMOTE CONTROL 3 (TRIPLE)

REF. NO.	PART NO.	DESCRIPTION	601R					REMARKS
54	6X6–48175–00	.BOOT	4					
55	703–82591–00	.BAND	10					
56	97780–50145	.SCREW, TAPPING	4					
57	98580–05060	.SCREW, PAN HEAD	4					
58	95380–05600	.NUT	4					
59	6X6–82590–80	.WIRE HARNESS ASSY	1					2 STATION MAIN
	6X6–82590–90	.WIRE HARNESS ASSY	1					2 STATION SUB
60	6X6–82585–20	..CAP 2 (2P)	3					
61	6X6–82582–60	..CAP 1 (6P)	3					FOR 6X6-82590-80
62	6X6–82582–40	..CAP 1 (4P)	3					FOR 6X6-82590-80
63	6X6–82582–30	..CAP 1 (3P)	3					FOR 6X6-82590-80
64	6X6–82582–B0	..CAP 1 (12P)	3					FOR 6X6-82590-80
65	6X6–48129–00	.SCREW 3	4					
66	6X6–82540–00	.NEUTRAL SWITCH ASSY	1					
67	6X6–48241–00	.ARM, DRIVE	2					
68	6X6–48245–01	.PLATE, LOCK	2					
69	6X6–82545–00	.GROMMET	2					
70	6X6–8252V–00	.SCREW, SPECIAL	4					
71	704–81950–10	.RELAY ASSY	4					
72	6X6–44191–00	.INDICATOR, SHIFT	2					
73	6X6–48176–50	.GROMMET	1					
74	6X6–48176–60	.GROMMET	1					
75	6X6–48127–00	.SCREW 1	8					
76	6X6–48128–00	.SCREW 2	4					
77	6X6–81146–00	.SCREW 2	4					
78	6X6–81145–00	.SCREW 1	2					
79	6X6–82563–20	.TRIM & TILT SWITCH ASSY	1					

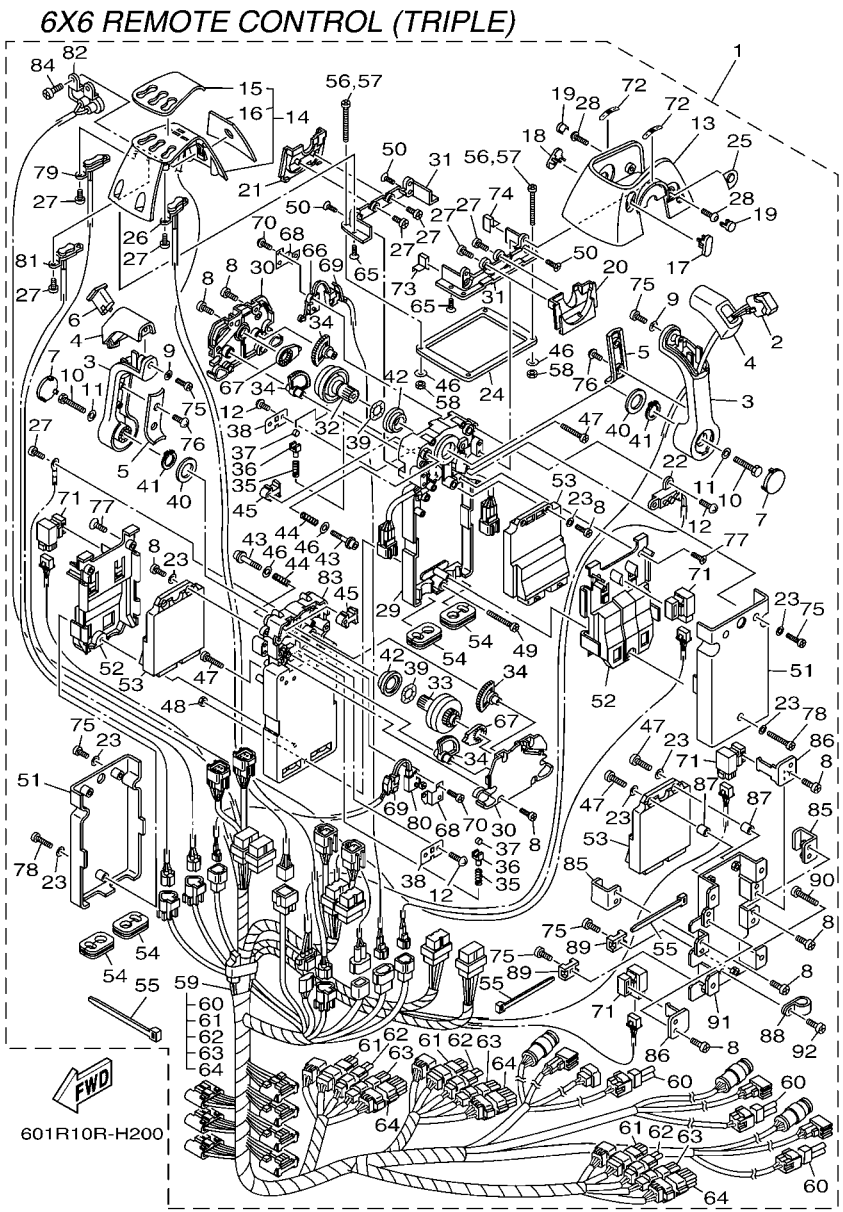

FIG. 20 DBW REMOTE CONTROL 3 (TRIPLE)

REF. NO.	PART NO.	DESCRIPTION	601R					REMARKS
80	6X6–82540–10	.NEUTRAL SWITCH ASSY	1					
81	6X6–82563–30	.TRIM & TILT SWITCH ASSY	1					
82	6X6–8259F–00	.SWITCH ASSY	1					
83	6X6–481A0–31	.REMO-CON. CASE ASSY	1					
84	98780–05010	.SCREW, FLAT HEAD	2					
85	6X6–85557–00	.HOLDER	2					
86	6X6–82591–00	.BAND	2					
87	6X6–8252S–00	.SPACER, 1	2					
88	6X6–82584–00	.CLAMP	1					
89	6X6–82581–00	.STAY, CORD CLAMP	2					
90	6X0–48128–00	.SCREW(M6X30)	4					
91	6X6–48211–10	.HOUSING,1	1					
92	6X7–48127–00	.SCREW 1	1					

REMOTE CONTROL SPECIFICATION LIST (6X7 TYPE)

TYPE : 6X7	MECHANICAL SPECIFICATION							
TYPE : 6X7	LIST UP SEC.	TYPE CODE	SERIAL NO.	ENGINE			HANDLE POSITION	
PART NO.	FIG.NO.-REF.NO.			SINGLE	TWIN	TRIPLE	RIGHT	LEFT
6X7-48206-00	21-1	A	6X7:0000001-	○	*	*	○	*

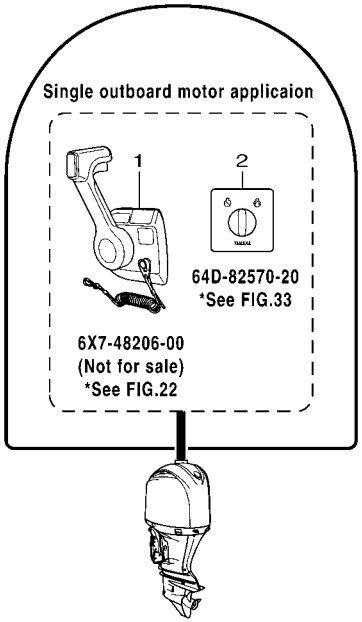

601R10R-H210

FIG. 21 LAYOUT CHART 4 (6X7)

REF. NO.	PART NO.	DESCRIPTION	601R					REMARKS
1	6X7–48206–00	REMOTE CONTROL ASSY	1					NOT FOR SALE
2	64D–82570–20	PANEL SWITCH ASSY	1					

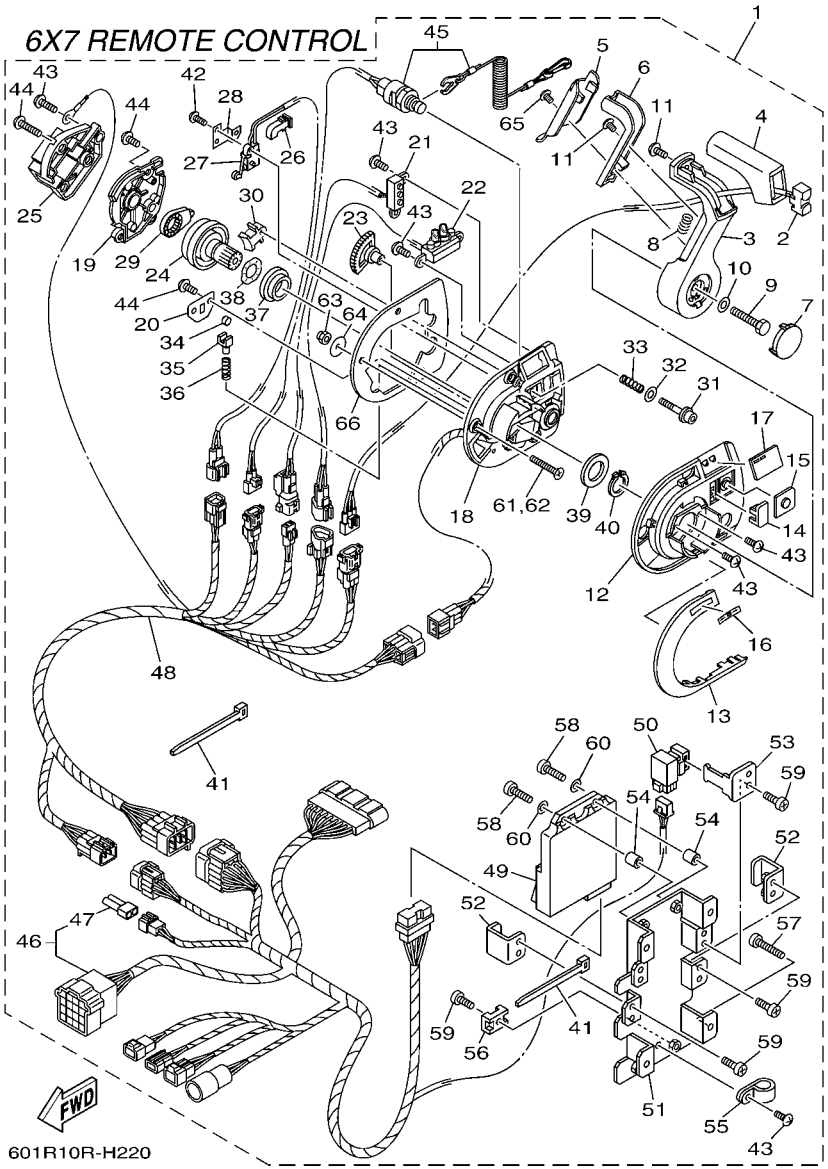

FIG. 22 DBW REMOTE CONTROL 4 (6X7)

REF. NO.	PART NO.	DESCRIPTION	601R					REMARKS
1	6X7–48206–00	REMOTE CONTROL ASSY	1					NOT FOR SALE
2	6X7–82563–00	.TRIM & TILT SWITCH ASSY	1					
3	6X7–48221–00	.LEVER, CONTROL	1					
4	6X7–48222–00	.GRIP, CONTROL LEVER	1					
5	6X7–48224–00	.COVER, CONTROL LEVER	1					
6	6X7–48223–00	.LOCK, NEUTRAL	1					
7	6X7–48224–10	.COVER, CONTROL LEVER	1					
8	703–48227–00	.SPRING, NEUTRAL LOCK	1					
9	6X6–48171–00	.BOLT	1					
10	92990–08600	.WASHER, PLATE	1					
11	6X6–48128–00	.SCREW 2	2					
12	6X7–48119–00	.COVER	1					
13	6X7–48167–10	.PLUG	1					
14	6X7–48167–00	.PLUG	1					
15	6X7–48225–00	.COVER	1					
16	6X7–44191–00	.INDICATOR, SHIFT	1					
17	6X7–48215–00	.GRAPHIC	1					
18	6X7–481A0–01	.REMO-CON. CASE ASSY	1					
19	6X7–48212–00	.BACK PLATE 1	1					
20	6X7–48189–00	.RETAINER	1					
21	6X7–8259E–00	.SWITCH ASSY	1					
22	6X7–84301–00	.PILOT LIGHT ASSY 1	1					
23	6X7–48233–00	.GEAR 2	1					
24	6X7–48242–00	.SHAFT, DRIVE	1					
25	6X7–48228–00	.HOLDER, SWITCH	1					
26	6X7–82545–00	.GROMMET	1					
27	6X6–82540–00	.NEUTRAL SWITCH ASSY	1					

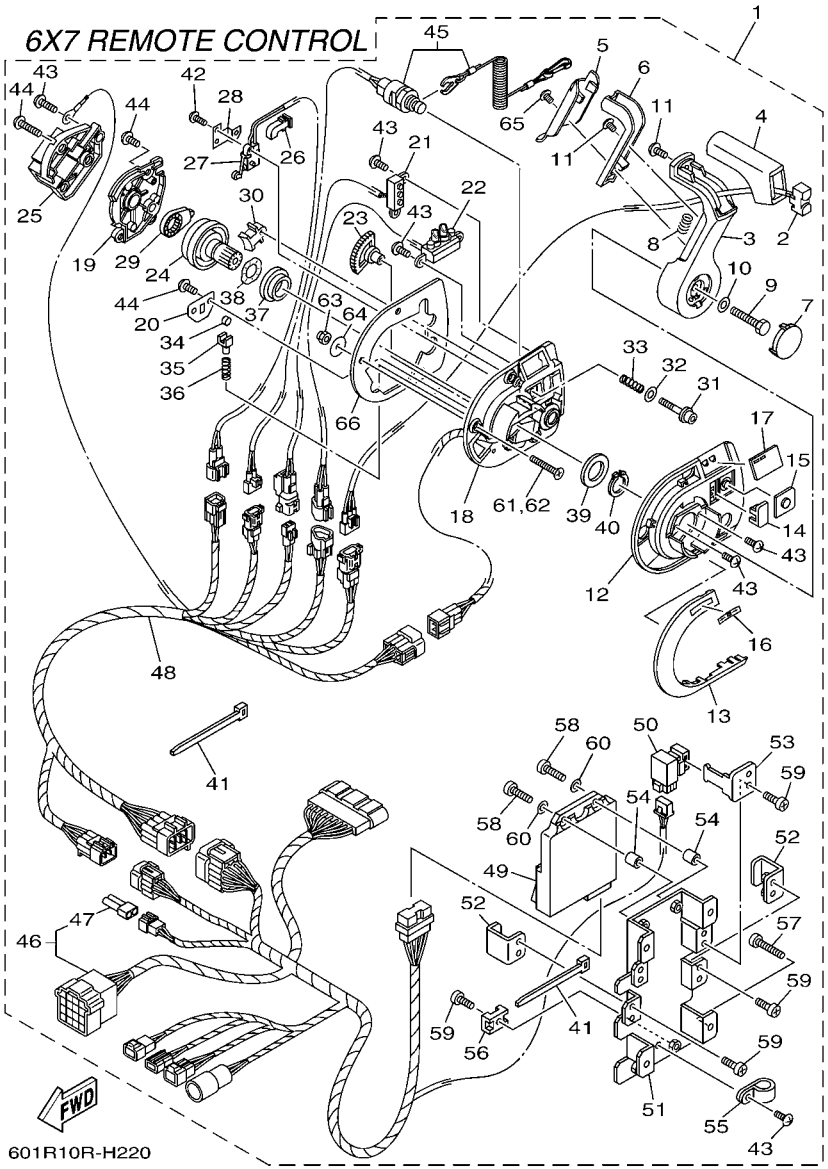

FIG. 22 DBW REMOTE CONTROL 4 (6X7)

REF. NO.	PART NO.	DESCRIPTION	601R					REMARKS
28	6X6–48245–01	.PLATE, LOCK	1					
29	6X6–48241–00	.ARM, DRIVE	1					
30	6X6–48264–00	.FRICTION, THROTTLE	1					
31	6X6–48267–00	.BOLT SET	1					
32	704–48287–00	.WASHER	1					
33	6X6–48158–00	.SPRING 1	1					
34	6X6–48236–00	.ROLLER, DETENT	1					
35	6X6–48237–00	.ADAPTOR	1					
36	6X6–48238–00	.SPRING, DETENT	1					
37	6X6–48234–00	.BUSHING 1	1					
38	703–48198–00	.WASHER, WAVE	1					
39	6X6–48193–00	.WASHER 3	1					
40	6X6–48118–00	.CLIP, SHIFT LEVER	1					
41	703–82591–00	.BAND	3					
42	6X6–8252V–00	.SCREW, SPECIAL	2					
43	6X7–48127–00	.SCREW 1	8					
44	EL8–48127–00	.SCREW 1	8					
45	6X7–82575–00	.ENGINE STOP SWITCH ASSY	1					
46	6X7–82590–10	.WIRE HARNESS ASSY	1					
47	6X6–82585–20	..CAP 2 (2P)	1					
48	6X7–82590–00	.WIRE HARNESS ASSY	1					
49	6X6–85590–10	.CONTROL UNIT ASSY	1					
50	704–81950–10	.RELAY ASSY	1					
51	6X6–48211–10	.HOUSING,1	1					
52	6X6–85557–00	.HOLDER	2					
53	6X6–82591–00	.BAND	1					
54	6X6–8252S–00	.SPACER, 1	2					

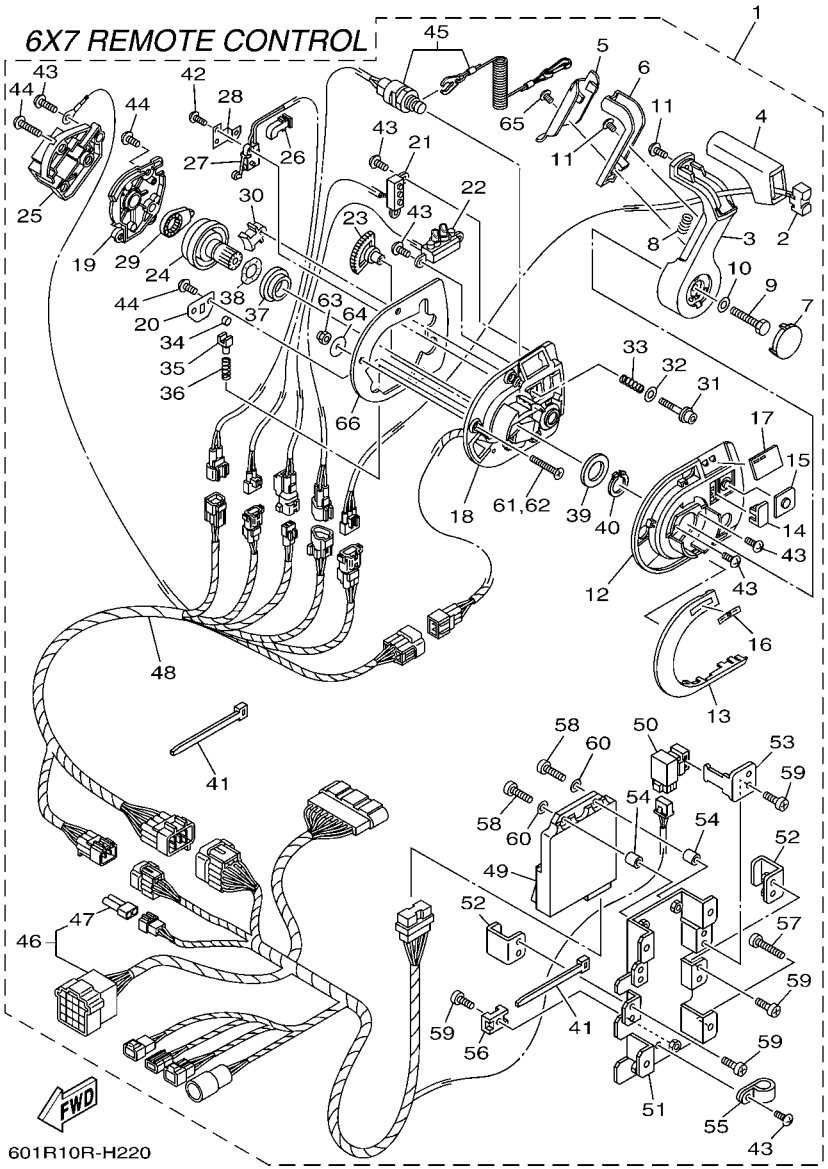

FIG. 22 DBW REMOTE CONTROL 4 (6X7)

REF. NO.	PART NO.	DESCRIPTION	601R					REMARKS
55	6X6–82584–00	.CLAMP	1					
56	6X6–82581–00	.STAY, CORD CLAMP	1					
57	6X0–48128–00	.SCREW(M6X30)	4					
58	98580–05025	.SCREW, PAN HEAD	2					
59	98580–05014	.SCREW, PAN HEAD	7					
60	92990–05200	.WASHER, PLAIN	2					
61	98780–06035	.SCREW, FLAT HEAD	3					
62	97780–06230	.SCREW, TAPPING	3					
63	6X0–48156–00	.NUT 1	3					
64	701–48287–00	.WASHER	3					
65	6X7–48128–00	.SCREW 2	1					
66	6X7–48176–10	.GROMMET	1					

FIG. 23 SWITCH & PANEL 1

SINGLE IG SWITCH W/ PANEL

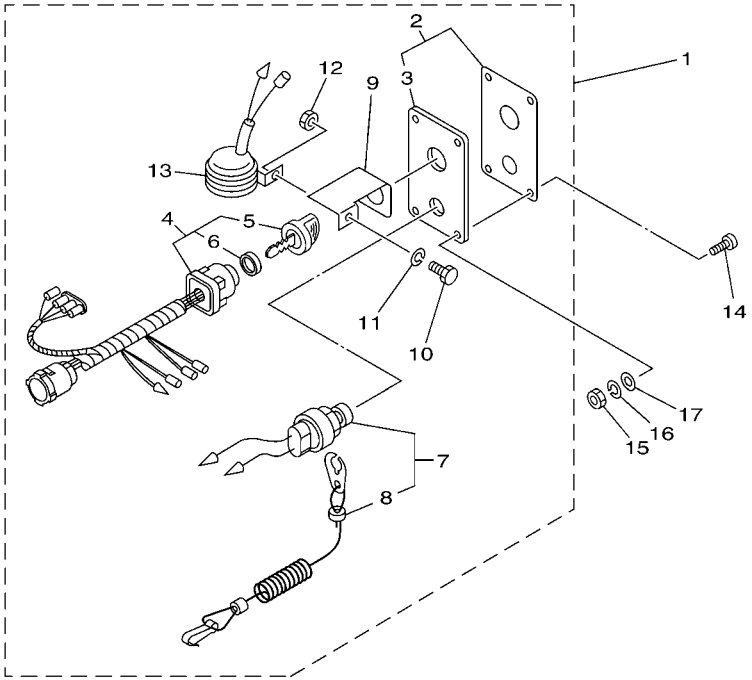

601R10R-H230

REF. NO.	PART NO.	DESCRIPTION	601R					REMARKS
1	704–82570–08	PANEL SWITCH ASSY	1					WITH CHOKE SW.
2	704–82571–02	.PANEL, SWITCH	1					
3	6R5–82588–01	..PLATE	1					
4	704–82510–07	.MAIN SWITCH ASSY	1					
5	703–82577–00	..CAP, KEY	1					
6	6K1–82532–00	..CAP	1					
7	688–82575–01	.ENGINE STOP SWITCH ASSY	1					
8	682–82556–00	..LANYARD, STOP SWITCH	1					
9	64D–82581–00	.STAY, CORD CLAMP	1					
10	97303–05012	.BOLT	1					
11	92903–05100	.WASHER, SPRING	1					
12	95303–05700	.NUT	1					
13	688–83383–11	.BUZZER	1					
14	90149–05M05	SCREW	4					
15	95380–05600	NUT	4					
16	92990–05100	WASHER, SPRING	4					
17	92990–05600	WASHER, PLATE	4					

FIG. 24 SWITCH & PANEL 2

SINGLE IG SWITCH W/ PANEL
(FOR PRIME START or DIGITAL NETWORK GAUGE)

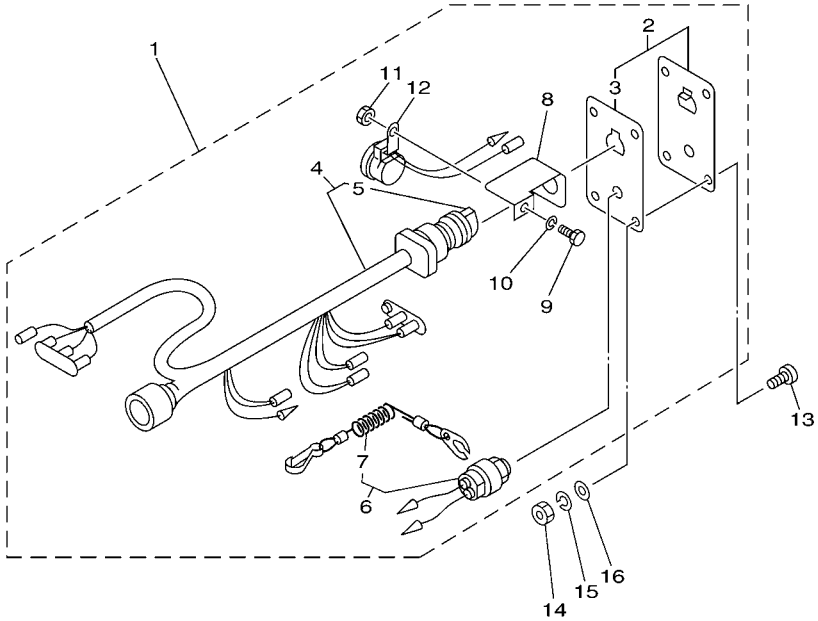

601R10R-H240

REF. NO.	PART NO.	DESCRIPTION	601R					REMARKS
1	6R5–82570–05	PANEL SWITCH ASSY	1					WITHOUT CHOKE SW.
2	704–82571–02	.PANEL, SWITCH	1					
3	6R5–82588–01	..PLATE	1					
4	6R5–82510–02	.MAIN SWITCH ASSY	1					
5	676–82577–00	..CAP, KEY	1					
6	688–82575–01	.ENGINE STOP SWITCH ASSY	1					
7	682–82556–00	..LANYARD, STOP SWITCH	1					
8	64D–82581–00	.STAY, CORD CLAMP	1					
9	97303–05012	.BOLT	1					
10	92903–05100	.WASHER, SPRING	1					
11	95303–05700	.NUT	1					
12	6R5–83383–00	.BUZZER	1					
13	90149–05M05	SCREW	4					
14	95303–05600	NUT	4					
15	92903–05100	WASHER, SPRING	4					
16	92903–05600	WASHER, PLATE	4					

FIG. 25 SWITCH & PANEL 3

SINGLE IG SWITCH W/ PANEL
(FOR 6X6 DBW REMOTE CONTROL)

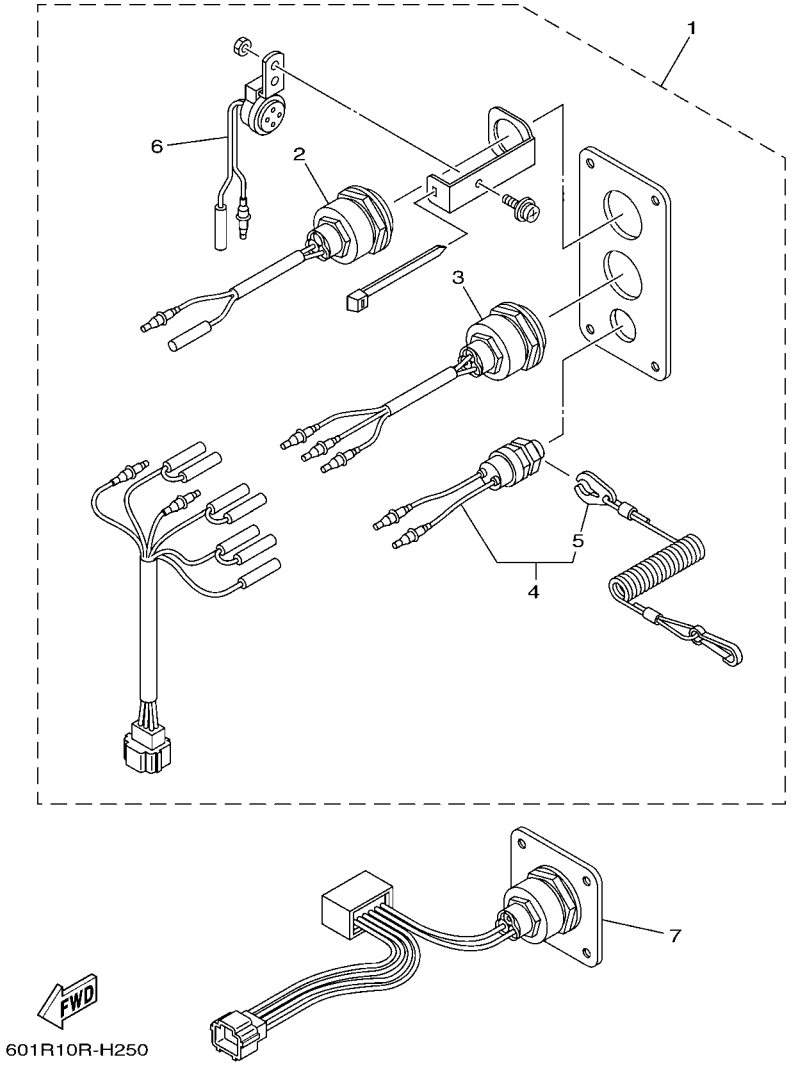

REF. NO.	PART NO.	DESCRIPTION	601R					REMARKS
1	6X6–82570–00	PANEL SWITCH ASSY (SINGLE)	1					2 STATION SUB
2	6X1–81870–00	.STARTING SWITCH ASSY	1					
3	6X1–82550–00	.ENGINE STOP SWITCH ASSY	1					
4	688–82575–01	.ENGINE STOP SWITCH ASSY	1					
5	682–82556–00	..LANYARD, STOP SWITCH	1					
6	6R5–83383–00	.BUZZER	1					
7	6X6–82570–A0	PANEL SWITCH ASSY	2					2 STATION SUB

FIG. 26 SWITCH & PANEL 4

SINGLE IG SWITCH W/O PANEL

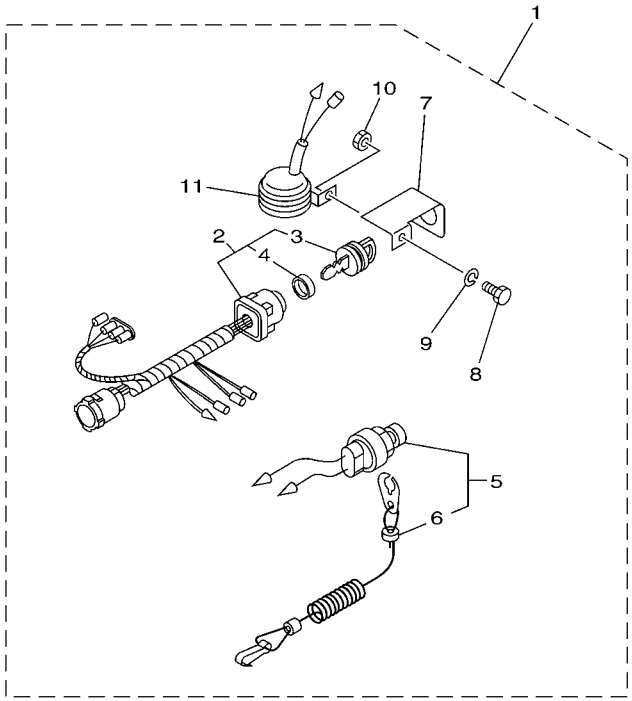

601R10R-H260

REF. NO.	PART NO.	DESCRIPTION	601R					REMARKS
1	704–8257C–00	PANEL SWITCH COMP. 2	1					WITH CHOKE SW.
2	704–82510–07	.MAIN SWITCH ASSY	1					
3	703–82577–00	..CAP, KEY	1					
4	6K1–82532–00	..CAP	1					
5	688–82575–01	.ENGINE STOP SWITCH ASSY	1					
6	682–82556–00	..LANYARD, STOP SWITCH	1					
7	64D–82581–00	.STAY, CORD CLAMP	1					
8	97303–05012	.BOLT	1					
9	92903–05100	.WASHER, SPRING	1					
10	95303–05700	.NUT	1					
11	688–83383–11	.BUZZER	1					

FIG. 27 SWITCH & PANEL 5

TWIN IG SWITCH

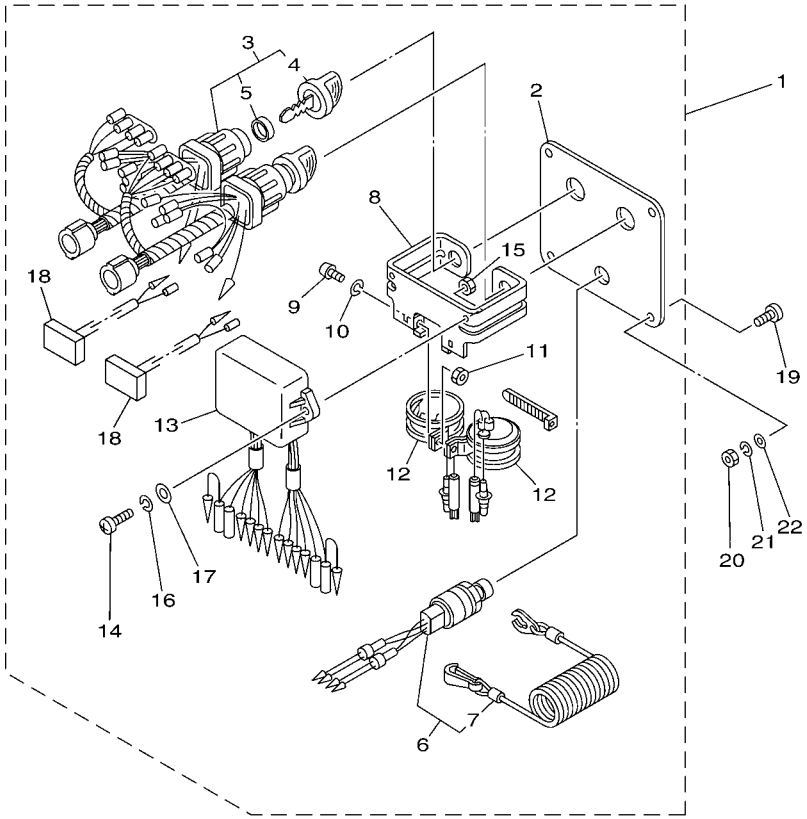

601R10R-H270

REF. NO.	PART NO.	DESCRIPTION	601R					REMARKS
1	6K1–82570–08	PANEL SWITCH ASSY	1					WITH CHOKE SW.
2	6K1–82571–02	.PLATE, PANEL SWITCH	1					
3	6K1–82510–06	.MAIN SWITCH ASSY	2					
4	703–82577–00	..CAP, KEY	1					
5	6K1–82532–00	..CAP	1					
6	6K1–82575–00	.ENGINE STOP SWITCH ASSY	1					
7	682–82556–00	..LANYARD, STOP SWITCH	1					
8	6K1–83614–01	.BRACKET	1					
9	98980–05010	.SCREW, BIND	2					
10	92990–05100	.WASHER, SPRING	2					
11	95380–05600	.NUT	2					
12	688–83383–11	.BUZZER	2					
13	6K1–85830–01	.CONTROL UNIT ASSY	1					
14	98980–06020	.SCREW, BIND	2					
15	95380–06600	.NUT, HEXAGON	2					
16	92990–06100	.WASHER, SPRING	2					
17	92990–06600	.WASHER, PLATE	2					
18	6K1–81980–00	.DIODE ASSY	2					
19	90149–05M05	SCREW	4					
20	95380–05600	NUT	4					
21	92990–05100	WASHER, SPRING	4					
22	92990–05600	WASHER, PLATE	4					

FIG. 28 SWITCH & PANEL 6

TWIN IG SWITCH

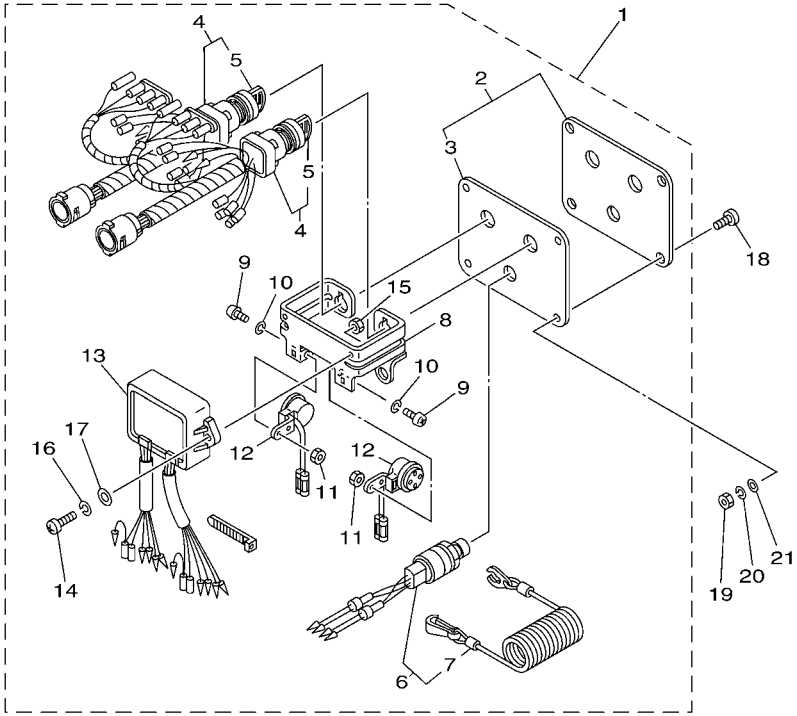

601R10R-H280

REF. NO.	PART NO.	DESCRIPTION	601R					REMARKS
1	61B–82570–03	PANEL SWITCH ASSY	1					WITHOUT CHOKE SW.
2	6K1–82571–02	.PLATE, PANEL SWITCH	1					
3	61B–82588–01	..PLATE	1					
4	61B–82510–01	.MAIN SWITCH ASSY	2					
5	676–82577–00	..CAP, KEY	1					
6	6K1–82575–00	.ENGINE STOP SWITCH ASSY	1					
7	682–82556–00	..LANYARD, STOP SWITCH	1					
8	6K1–83614–01	.BRACKET	1					
9	98980–05010	.SCREW, BIND	2					
10	92990–05100	.WASHER, SPRING	2					
11	95380–05600	.NUT	2					
12	6R5–83383–00	.BUZZER	2					
13	61B–85830–00	.CONTROL UNIT ASSY	1					
14	98980–06020	.SCREW, BIND	2					
15	95380–06600	.NUT, HEXAGON	2					
16	92990–06100	.WASHER, SPRING	2					
17	92990–06600	.WASHER, PLATE	2					
18	90149–05M05	SCREW	4					
19	95380–05600	NUT	4					
20	92990–05100	WASHER, SPRING	4					
21	92990–05600	WASHER, PLATE	4					

FIG. 29 SWITCH & PANEL 7

TWIN IG SWITCH
(FOR DIGITAL NETWORK GAUGE)

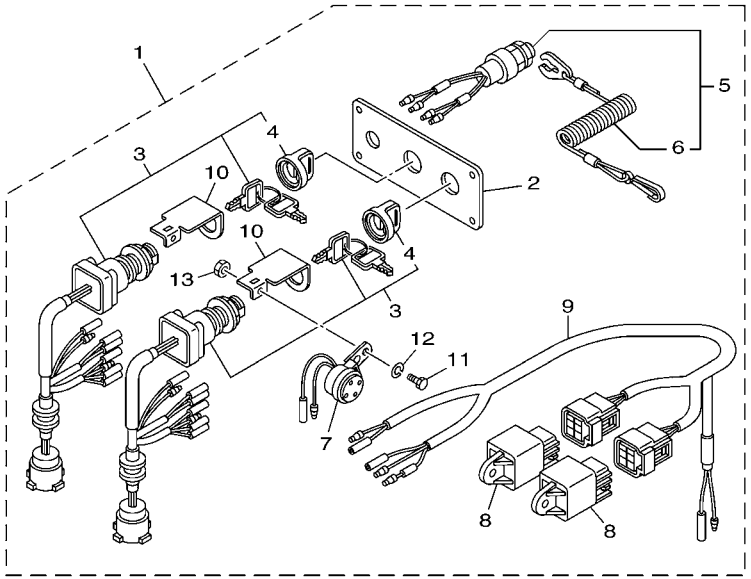

601R10R-H290

REF. NO.	PART NO.	DESCRIPTION	601R					REMARKS
1	6Y8–82570–02	PANEL SW., TWIN	1					1 & 2 STATION MAIN
2	6Y8–82571–01	.PLATE, PANEL SWITCH	1					
3	6Y8–82510–02	.MAIN SWITCH ASSY	2					
4	676–82577–00	..CAP, KEY	1					
5	6K1–82575–00	.ENGINE STOP SWITCH ASSY	1					
6	682–82556–00	..LANYARD, STOP SWITCH	1					
7	6R5–83383–00	.BUZZER	2					
8	68V–81950–00	.RELAY ASSY	2					
9	6Y8–82507–00	.LEAD, IGNITION SWITCH RELAY	1					
10	64D–82581–00	.STAY, CORD CLAMP	2					
11	97303–05012	.BOLT	2					
12	92903–05100	.WASHER, SPRING	2					
13	95303–05700	.NUT	2					

FIG. 30 SWITCH & PANEL 8

TWIN IG SWITCH
(FOR 6X6 DBW REMOTE CONTROL)

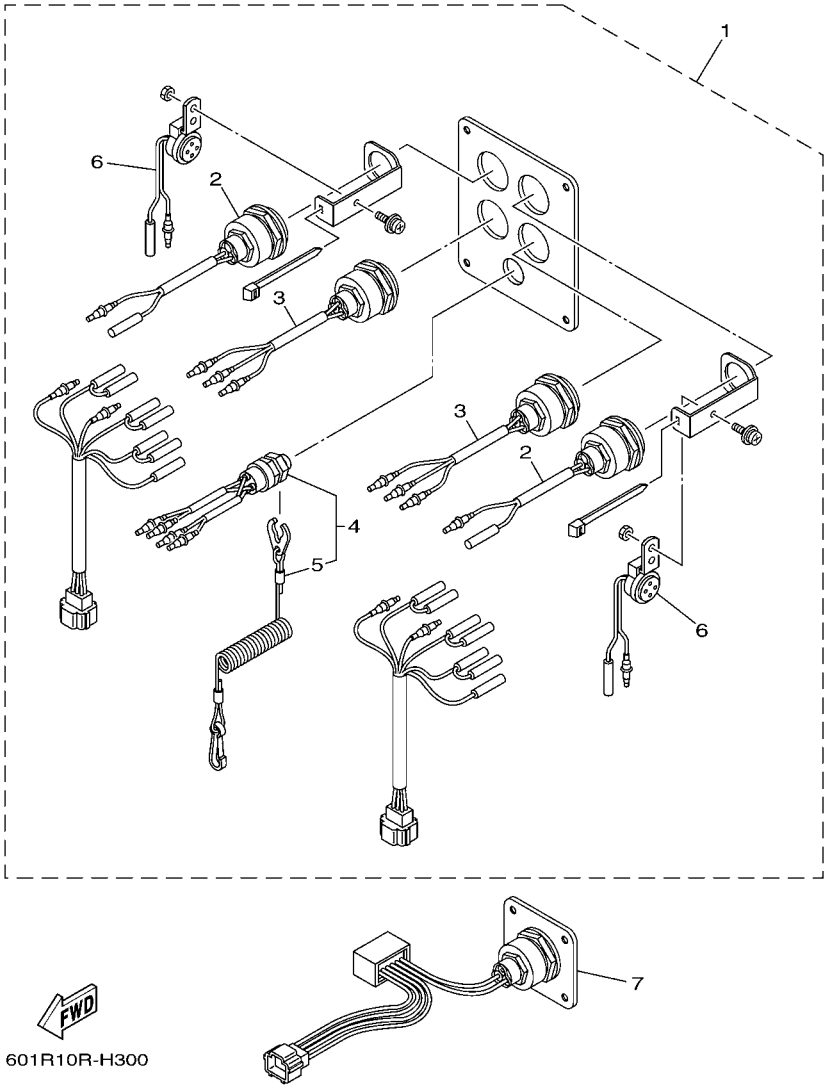

REF. NO.	PART NO.	DESCRIPTION	601R					REMARKS
1	6X6–82570–10	PANEL SWITCH ASSY (TWIN)	1					2 STATION SUB
2	6X1–81870–00	.STARTING SWITCH ASSY	2					
3	6X1–82550–00	.ENGINE STOP SWITCH ASSY	2					
4	6K1–82575–00	.ENGINE STOP SWITCH ASSY	1					
5	682–82556–00	..LANYARD, STOP SWITCH	1					
6	6R5–83383–00	.BUZZER	2					
7	6X6–82570–A0	PANEL SWITCH ASSY	2					2 STATION SUB

TRIPLE IG SWITCH
(FOR DIGITAL NETWORK GAUGE)

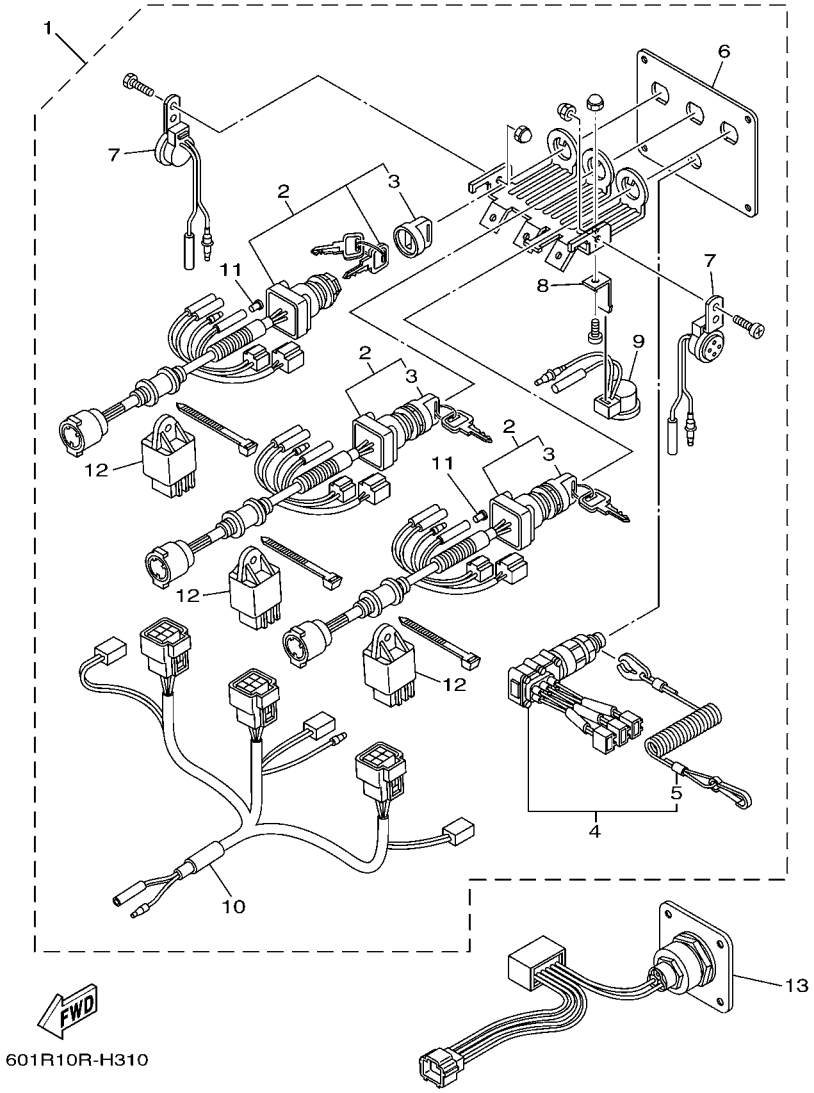

FIG. 31 SWITCH & PANEL 9

REF. NO.	PART NO.	DESCRIPTION	601R					REMARKS
1	6X5–82570–01	PANEL SWITCH ASSY	1					2 STATION MAIN
2	6X5–82510–01	.MAIN SWITCH ASSY	3					
3	676–82577–00	..CAP, KEY	1					
4	6X5–82575–00	.ENGINE STOP SWITCH ASSY	1					
5	682–82556–00	..LANYARD, STOP SWITCH	1					
6	6X5–82571–00	.PANEL, SWITCH	1					
7	6X5–83383–00	.BUZZER	2					
8	6X5–82581–00	.STAY, CORD CLAMP	1					
9	6X4–83383–00	.BUZZER	1					
10	6X5–82507–00	.WIRE, LEAD	1					
11	703–82119–00	.COVER, LEAD WIRE	5					
12	68V–81950–00	.RELAY ASSY	3					
13	6X6–82570–A0	PANEL SWITCH ASSY	1					2 STATION MAIN

FIG. 32 SWITCH & PANEL 10

TRIPLE IG SWITCH
(FOR 6X6 DBW REMOTE CONTROL)

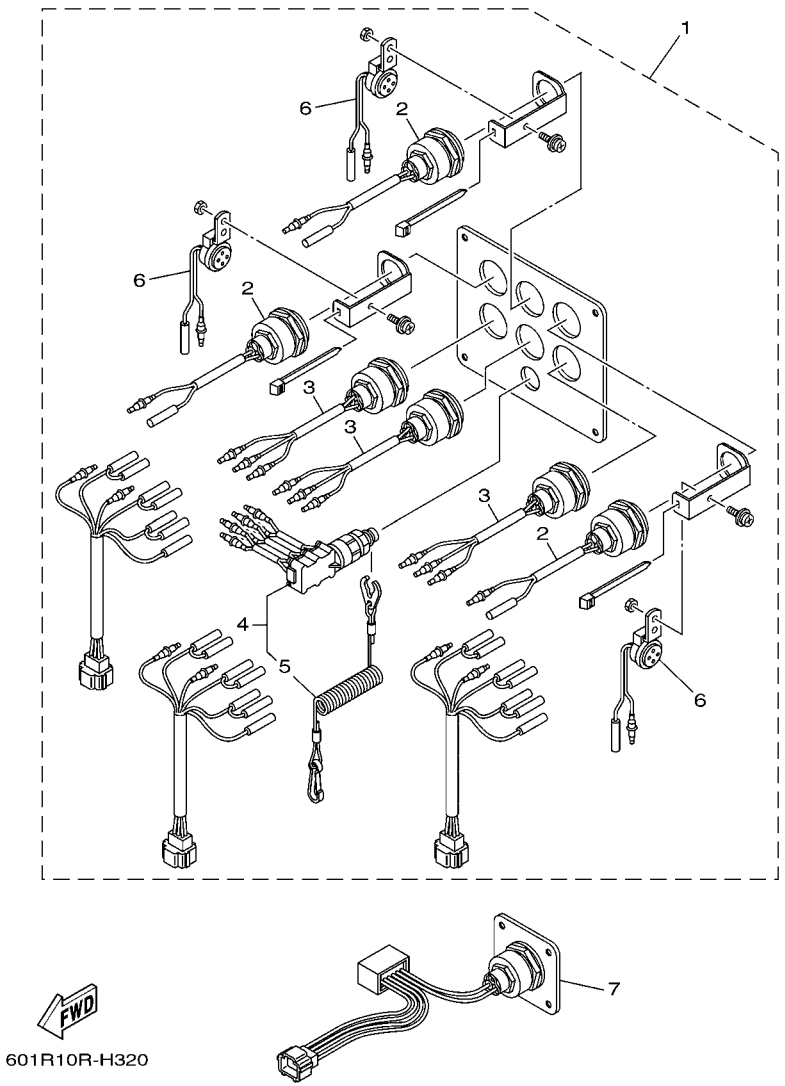

REF. NO.	PART NO.	DESCRIPTION	601R					REMARKS
1	6X6–82570–20	PANEL SWITCH ASSY	1					2 STATION SUB
2	6X1–81870–00	.STARTING SWITCH ASSY	3					
3	6X1–82550–00	.ENGINE STOP SWITCH ASSY	3					
4	6X6–82575–00	.ENGINE STOP SWITCH ASSY	1					
5	682–82556–00	..LANYARD, STOP SWITCH	1					
6	6R5–83383–00	.BUZZER	3					
7	6X6–82570–A0	PANEL SWITCH ASSY	2					2 STATION SUB

IG SWITCH W/ PANEL

Part No.	Remarks
64D-82570-03	With bullet connectors for stop switch
64D-82570-20	With 2-pin coupler for stop switch, For 6X3 and 6X7 remote control

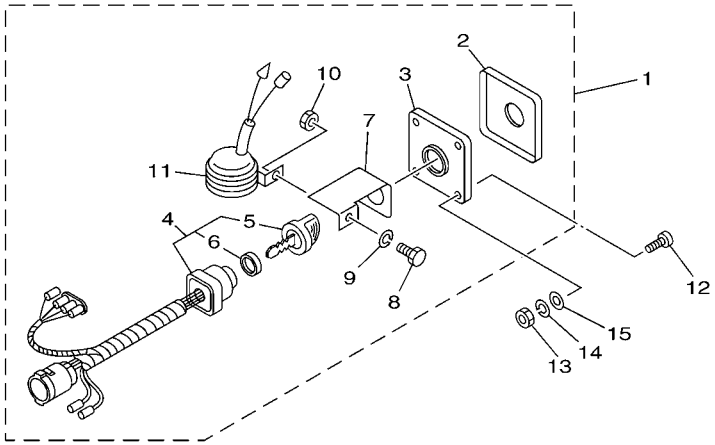

EMERGENCY STOP SWITCH W/ PANEL

Part No.	Remarks
64D-82570-10	With bullet connectors for stop switch
64D-82570-30	With 2-pin coupler for stop switch

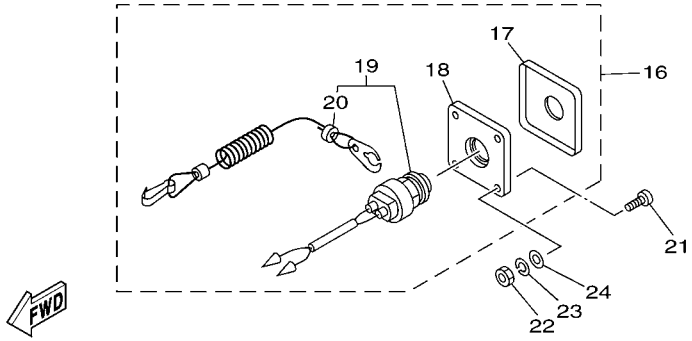

601R10R-H330

FIG. 33 SWITCH & PANEL 11

REF. NO.	PART NO.	DESCRIPTION	601R					REMARKS
1	64D–82570–03	PANEL SWITCH ASSY	1					UR
	64D–82570–20	PANEL SWITCH ASSY	1					UR
2	64D–82571–00	.PANEL, SWITCH	1					
3	64D–82588–00	.PLATE	1					
4	64D–82510–03	.MAIN SWITCH ASSY	1					
5	703–82577–00	..CAP, KEY	1					
6	6K1–82532–00	..CAP	1					
7	64D–82581–00	.STAY, CORD CLAMP	1					
8	97303–05012	.BOLT	1					
9	92903–05100	.WASHER, SPRING	1					
10	95303–05700	.NUT	1					
11	688–83383–11	.BUZZER	1					
12	90149–05M05	SCREW	4					
13	95380–05600	NUT	4					
14	92990–05100	WASHER, SPRING	4					
15	92990–05600	WASHER, PLATE	4					
16	64D–82570–10	PANEL SWITCH ASSY	1					UR
	64D–82570–30	PANEL SWITCH ASSY	1					UR
17	64D–82571–10	.PANEL, SWITCH	1					
18	64D–82588–10	.PLATE	1					
19	64D–82575–00	.ENGINE STOP SWITCH ASSY	1					FOR 64D-82570-10
	64D–82575–10	.ENGINE STOP SWITCH ASSY	1					FOR 64D-82570-30
20	682–82556–00	..LANYARD, STOP SWITCH	1					
21	90149–05M05	SCREW	4					
22	95380–05600	NUT	4					
23	92990–05100	WASHER, SPRING	4					
24	92990–05600	WASHER, PLATE	4					

IG SWITCH W/O PANEL

Ref. No.	Part No.	Remarks
1	704-82510-07	With bullet connectors for stop switch
4	6X3-8257B-00	With 2-pin coupler for stop switch, For 6X3 and 6X7 remote control

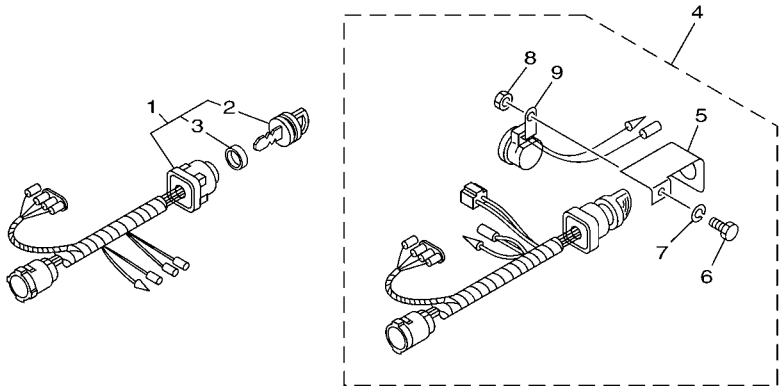

EMERGENCY STOP SWITCH W/O PANEL

Ref. No.	Part No.	Remarks
10	688-82575-01	With bullet connectors for stop switch
12	64D-82575-10	With 2-pin coupler for stop switch

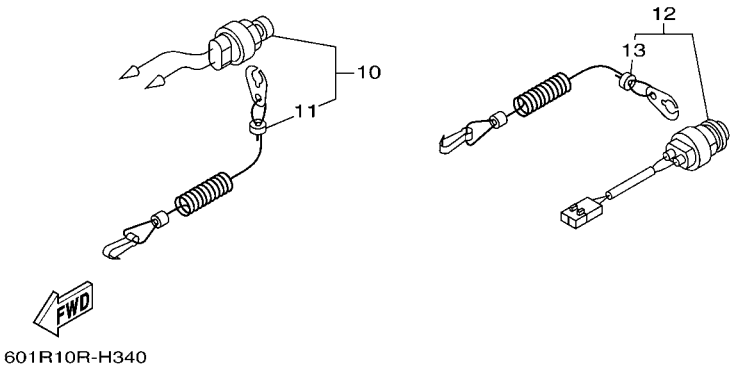

601R10R-H340

FIG. 34 SWITCH & PANEL 12

REF. NO.	PART NO.	DESCRIPTION	601R					REMARKS
1	704–82510–07	MAIN SWITCH ASSY	1					
2	703–82577–00	.CAP, KEY	1					
3	6K1–82532–00	.CAP	1					
4	6X3–8257B–00	PANEL SWITCH COMP.	1					
5	64D–82581–00	.STAY, CORD CLAMP	1					
6	97303–05012	.BOLT	1					
7	92903–05100	.WASHER, SPRING	1					
8	95303–05700	.NUT	1					
9	6R5–83383–00	.BUZZER	1					
10	688–82575–01	ENGINE STOP SWITCH ASSY	1					
11	682–82556–00	.LANYARD, STOP SWITCH	1					
12	64D–82575–10	ENGINE STOP SWITCH ASSY	1					
13	682–82556–00	.LANYARD, STOP SWITCH	1					

ADAPTER FOR EMERGENCY STOP SWITCH LEAD

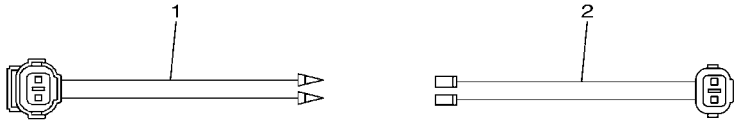

ENGINE SHUT-OFF LANYARD (CORD)

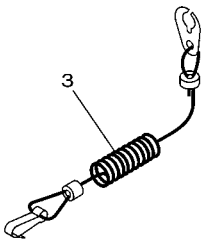

PT/T SWITCH PANEL
(FOR PTT MODELS)

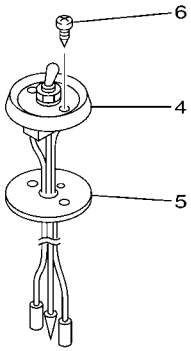

6011100-G330

FIG. 35 SWITCH & PANEL 13

REF. NO.	PART NO.	DESCRIPTION	601R					REMARKS
1	6X3–81971–00	WIRE, LEAD	1					
2	6X3–81971–10	WIRE, LEAD	1					
3	682–82556–00	LANYARD, STOP SWITCH	1					
4	688–82563–10	TRIM & TILT SWITCH ASSY	1					
5	688–82388–00	PLATE	1					
6	97780–40116	SCREW, TAPPING	2					

SWITCH PANEL HARNESS

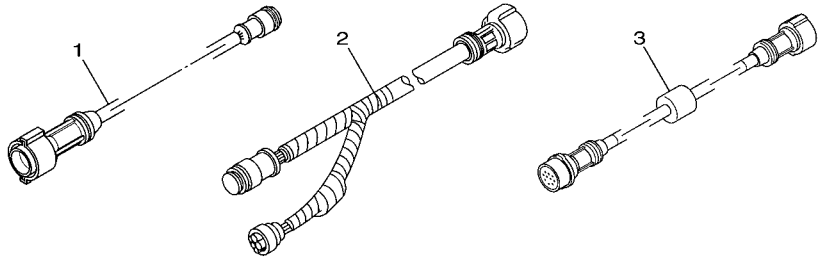

7-PIN MAIN HARNESS (Without PTT) | 10-PIN MAIN HARNESS | 7 TO 10-PIN ADAPTER

WIRE HARNESS

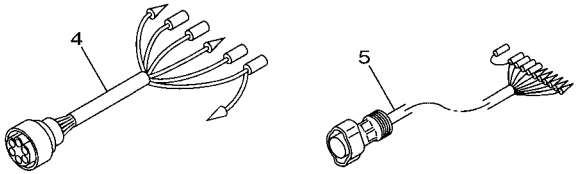

SUB WIRE LEAD (For 10-pin remote control main harness)

SUB WIRE LEAD (For 10-pin main harness of 703 remote control)

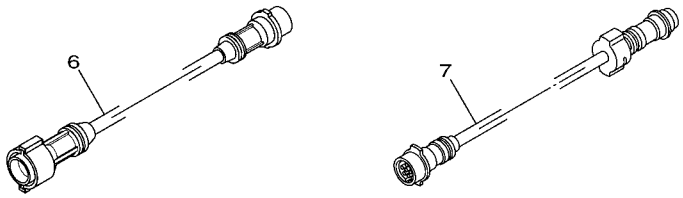

7-PIN EXTENSION HARNESS

10-PIN EXTENSION HARNESS

6011100-G340

FIG. 36 WIRE HARNESS 1

REF. NO.	PART NO.	DESCRIPTION	601R					REMARKS
1	688–82586–50	EXTENSION, WIRE HARNESS (5M)	1					(7P)
2	688–8258A–50	EXTENSION, WIRE HARNESS (5M)	1					UR (10P)
	688–8258A–60	EXTENSION, WIRE HARNESS (6M)	1					UR (10P)
	61B–8258A–01	EXTENSION, WIRE HARNESS (9.5M)	1					UR (10P)
	6K1–8258A–40	EXTENSION, WIRE HARNESS (8M)	1					UR (10P)
3	703–8258A–00	EXTENSION, WIRE HARNESS (0.5M)	1					7P TO 10P ADAPTER
4	704–85721–00	WIRE, LEAD	1					
5	688–8258A–20	EXTENSION, WIRE HARNESS (4.9M)	1					(10P)
6	688–82586–11	EXTENSION, WIRE HARNESS (2.0M)	1					UR L:2M(7P)
	688–82586–31	EXTENSION, WIRE HARNESS (3.0M)	1					UR L:3M(7P)
7	688–8258A–10	EXTENSION, WIRE HARNESS (2M)	1					UR (10P)
	688–8258A–30	EXTENSION, WIRE HARNESS (3M)	1					UR (10P)

FIG. 37 WIRE HARNESS 2

DIGITAL ELECTRONIC CONTROL WIRE HARNESS

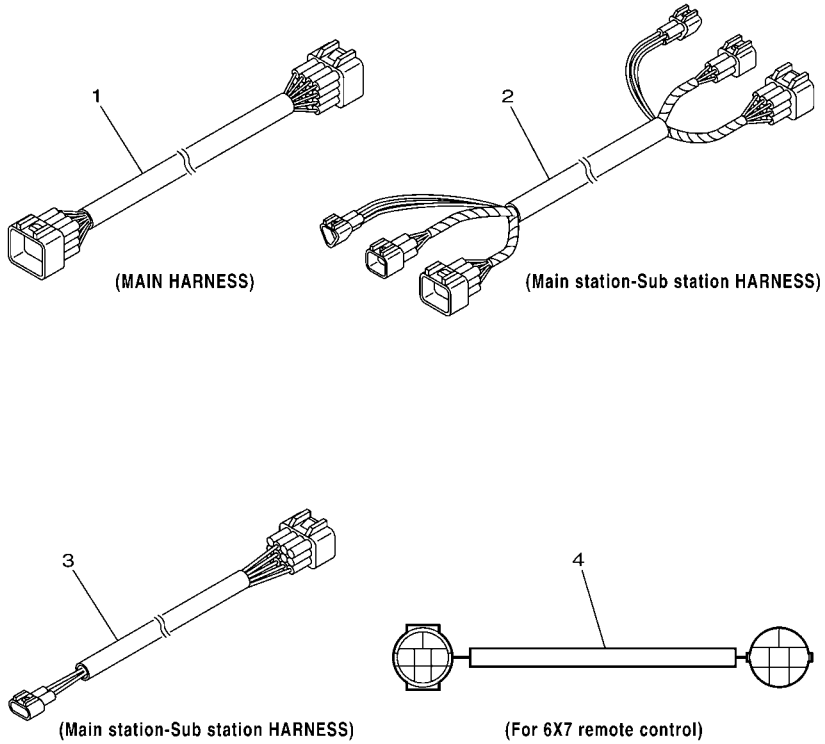

601R10R-H370

REF. NO.	PART NO.	DESCRIPTION	601R					REMARKS
1	6X6–8258A–00	EXTENSION, WIRE HARNESS (6.1M)	1					UR
	6X6–8258A–10	EXTENSION, WIRE HARNESS (7M)	1					UR
	6X6–8258A–20	EXTENSION, WIRE HARNESS (8M)	1					UR
	6X6–8258A–30	EXTENSION, WIRE HARNESS (10M)	1					UR
	6X6–8258A–40	EXTENSION, WIRE HARNESS (12M)	1					UR
2	6X6–8258A–A0	EXTENSION, WIRE HARNESS (5M)	1					UR 2 STATION
	6X6–8258A–C0	EXTENSION, WIRE HARNESS (8M)	1					UR 2 STATION
	6X6–8258A–E0	EXTENSION, WIRE HARNESS (12.2M)	1					UR 2 STATION
3	6X6–8258A–B0	EXTENSION, WIRE HARNESS (5M)	1					UR 2 STATION
	6X6–8258A–D0	EXTENSION, WIRE HARNESS (8M)	1					UR 2 STATION
	6X6–8258A–F0	EXTENSION, WIRE HARNESS (12.2M)	1					UR 2 STATION
4	6X7–82590–30	WIRE HARNESS ASSY	1					FOR 6X7 RC

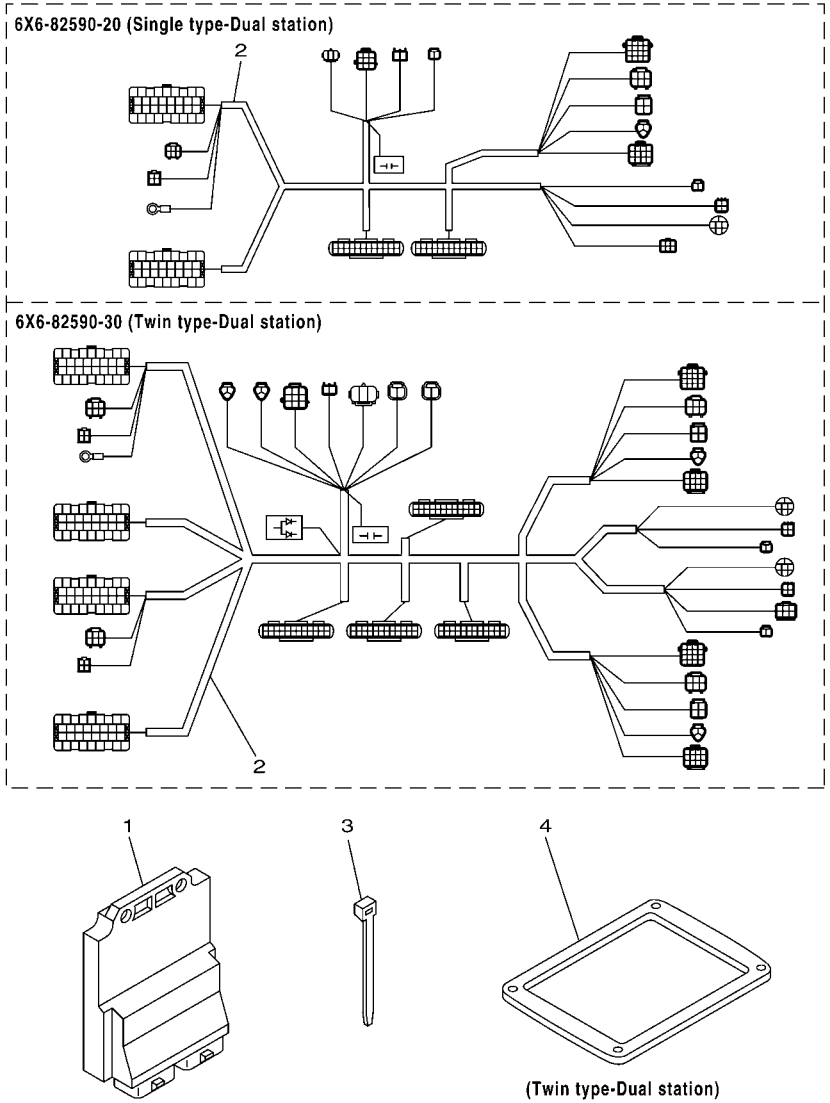

FIG. 38 ELECTRICAL DBW REMOTE CONTROL

REF. NO.	PART NO.	DESCRIPTION	601R					REMARKS
1	6X6–85590–00	CONTROL UNIT ASSY	1					SINGLE, 2 STATION
	6X6–85590–00	CONTROL UNIT ASSY	2					TWIN, 2 STATION
2	6X6–82590–20	WIRE HARNESS ASSY	1					SINGLE, 2 STATION
	6X6–82590–30	WIRE HARNESS ASSY	1					TWIN, 2 STATION
3	703–82591–00	BAND	4					SINGLE, 2 STATION
	703–82591–00	BAND	8					TWIN, 2 STATION
4	6X6–48176–10	GROMMET	1					TWIN, 2 STATION

Part No.	Applicable model	Remarks
655-48501-02	E8D/EK8D	Rope type
655-48501-10	E8D/EK8D	Ball post type

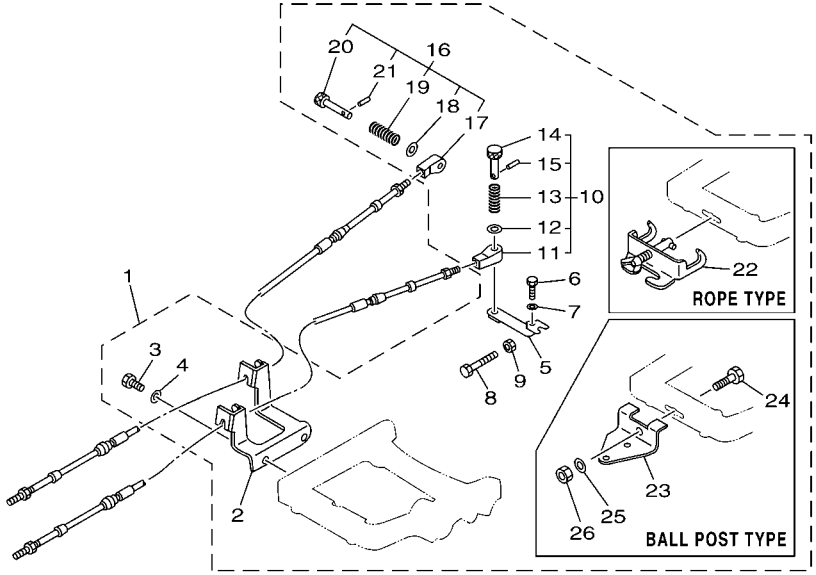

6011100-G370

FIG. 39 REMO CON ATTACHMENT 1

REF. NO.	PART NO.	DESCRIPTION	601R					REMARKS
1	655–48501–02	REMOTE CONT. ATTACHMENT ASSY.	1					UR ROPE TYPE
	655–48501–10	REMOTE CONT. ATTACHMENT ASSY.	1					UR BALL POST TYPE
2	655–48531–51	.BRACKET, REMOTE CONTROL 1	1					
3	97095–06018	.BOLT	2					
4	92995–06600	.WASHER	2					
5	647–48534–50	.THROTTLE LEVER, CONTROL	1					
6	97095–05020	.BOLT	1					
7	92995–05600	.WASHER	1					
8	97090–06045	.BOLT	1					
9	95380–06600	.NUT, HEXAGON	1					
10	647–48330–50	.CABLE END ASSY	1					
11	617–48346–90	..CABLE END, REMOTE CONTROL	1					
12	92990–08600	..WASHER, PLATE	1					
13	90501–10071	..SPRING, COMPRESSION	1					
14	617–48331–91	..HOOK, CABLE	1					
15	91690–30012	..PIN, SPRING	1					
16	647–48340–50	.CABLE END ASSY	1					
17	647–48346–50	..CABLE END, REMOTE CONTROL	1					
18	92990–08600	..WASHER, PLATE	1					
19	90501–10264	..SPRING, COMPRESSION	1					
20	617–48361–91	..HOOK, CABLE	1					
21	91690–30012	..PIN, SPRING	1					
22	700–48510–12	.STEERING HOOK ASSY	1					UR ROPE TYPE
23	676–48511–10	.HOOK, STEERING	1					UR BALL POST TYPE
24	97075–10040	.BOLT	1					
25	92990–10600	.WASHER, PLATE	1					
26	90185–10051	.NUT, SELF-LOCKING	1					

Part No.	Applicable model
63V-48501-00	9.9F (9.9), 15F (15)

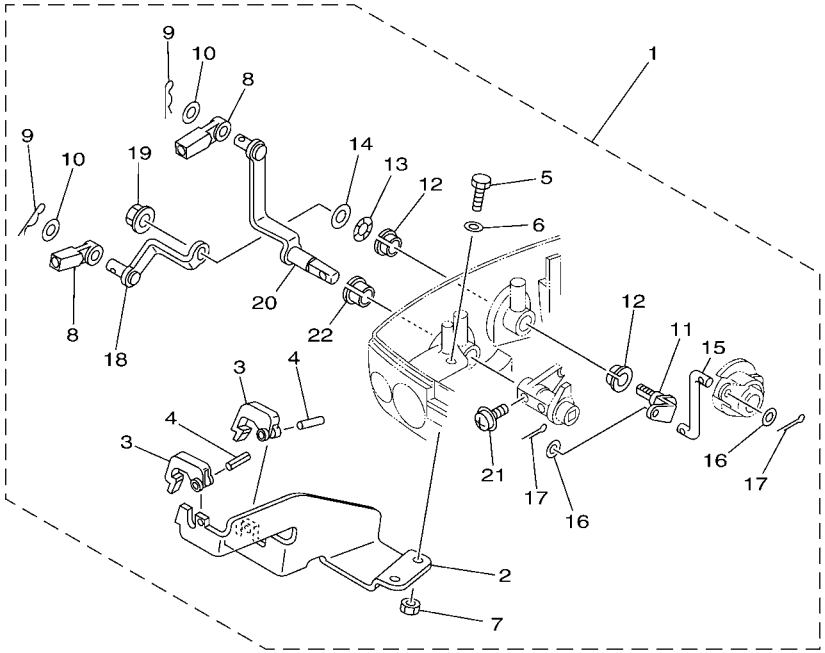

6011100-G380

FIG. 40 REMO CON ATTACHMENT 2

REF. NO.	PART NO.	DESCRIPTION	601R					REMARKS
1	63V–48501–00	REMOTE CONT. ATTACHMENT ASSY.	1					
2	63V–48531–00	.BRACKET, REMOTE CONTROL 1	1					
3	682–48538–50	.CLAMP, CABLE 1	2					
4	91690–30012	.PIN, SPRING	2					
5	97095–06016	.BOLT	2					
6	92995–06600	.WASHER	2					
7	95380–06600	.NUT, HEXAGON	2					
8	663–48344–00	.CABLE END, REMOTE CONTROL	2					
9	90468–18008	.CLIP	2					
10	90201–08M12	.WASHER, PLATE	2					
11	63V–42154–00	.LEVER, THROTTLE CONTROL	1					
12	90386–10025	.BUSH	2					
13	90206–10M04	.WASHER, WAVE	1					
14	90201–10M02	.WASHER, PLATE	1					
15	63V–42192–00	.ROD 2	1					
16	90201–04M06	.WASHER, PLATE	2					
17	91490–20010	.PIN. COTTER	2					
18	63V–48534–00	.THROTTLE LEVER, CONTROL	1					
19	95780–08300	.NUT, FLANGE	1					
20	63V–48544–00	.LEVER, SHIFTCONTROL	1					
21	90159–05M25	.SCREW, WITH WASHER	1					
22	90386–10009	.BUSH	1					

Part No.	Applicable model
6L2-48501-11	20D (20), 25N (25)

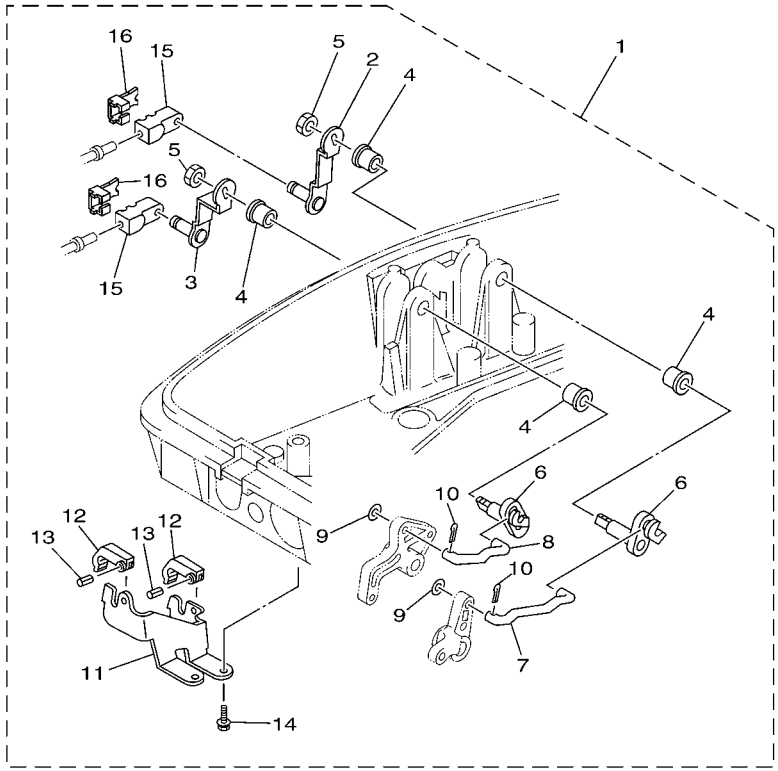

6011100-G390

FIG. 41 REMO CON ATTACHMENT 3

REF. NO.	PART NO.	DESCRIPTION	601R					REMARKS
1	6L2–48501–11	REMOTE CONT. ATTACHMENT ASSY.	1					
2	6L2–48544–01	.LEVER, SHIFTCONTROL	1					
3	6L2–48534–01	.THROTTLE LEVER, CONTROL	1					
4	90386–10009	.BUSH	4					
5	95780–08300	.NUT, FLANGE	4					
6	6L2–42154–01	.LEVER, THROTTLE CONTROL	2					
7	6L2–42191–01	.ROD 1	1					
8	6L2–42192–20	.ROD 2	1					
9	90202–05088	.WASHER, PLATE	2					
10	91490–20010	.PIN. COTTER	2					
11	6L2–48531–00	.BRACKET, REMOTE CONTROL 1	1					
12	682–48538–50	.CLAMP, CABLE 1	2					
13	91690–30012	.PIN, SPRING	2					
14	90105–06M23	.BOLT FLANGE	2					
15	6G8–26363–00	.END, WIRE 1	2					
16	6G8–26364–00	.END, CABLE	2					

Part No.	Applicable model	Remarks
689-48501-01-4D	25B, 25X, 30H E25B, E30H	Rope type
689-48501-21-4D		Ball post/ Steering guide type

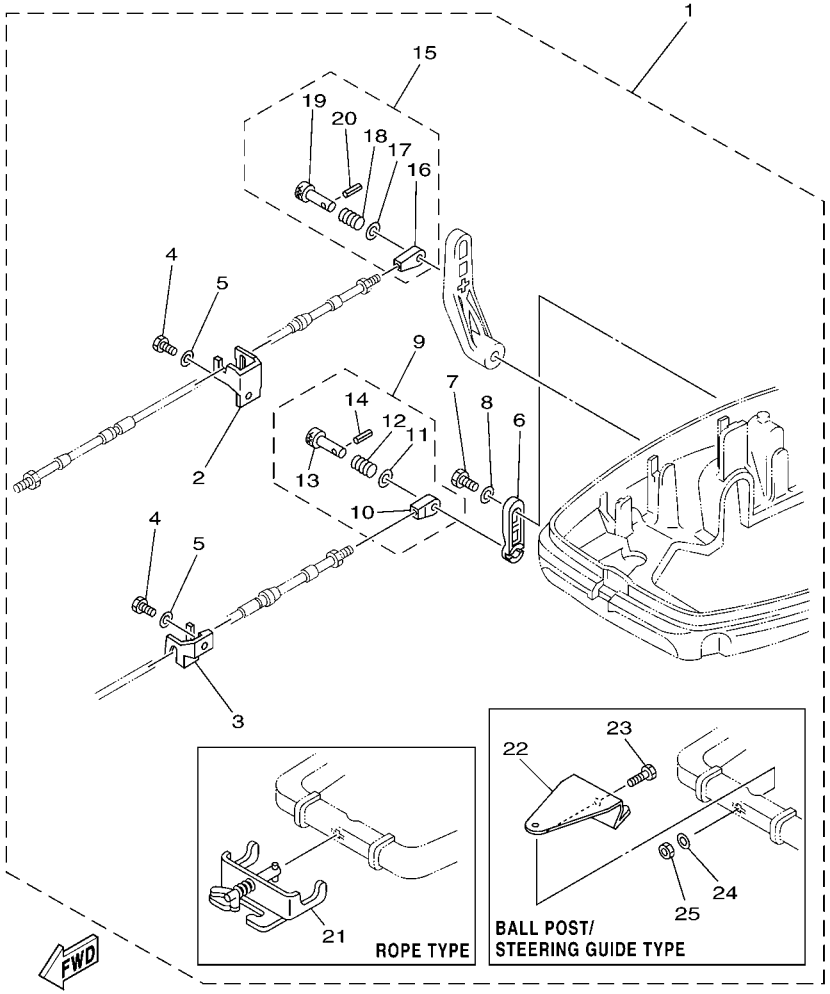

6011100-G400

FIG. 42 REMO CON ATTACHMENT 4

REF. NO.	PART NO.	DESCRIPTION	601R					REMARKS
1	689–48501–01–4D	REMOTE CONT. ATTACHMENT ASSY.	1					UR ROPE TYPE
	689–48501–21–4D	REMOTE CONT. ATTACHMENT ASSY.	1					UR
2	689–48531–50	.BRACKET, REMOTE CONTROL 1	1					
3	689–48532–50	.BRACKET, REMOTE CONTROL 2	1					
4	97095–06016	.BOLT	2					
5	92995–06600	.WASHER	2					
6	648–48534–50–4D	.THROTTLE LEVER, CONTROL	1					
7	97095–06012	.BOLT	1					
8	92995–06600	.WASHER	1					
9	648–48340–50	.CABLE END ASSY	1					
10	617–48346–90	..CABLE END, REMOTE CONTROL	1					
11	92990–08600	..WASHER, PLATE	1					
12	90501–10264	..SPRING, COMPRESSION	1					
13	617–48361–91	..HOOK, CABLE	1					
14	91690–30012	..PIN, SPRING	1					
15	648–48330–50	.CABLE END ASSY	1					
16	648–48346–50	..CABLE END, REMOTE CONTROL	1					
17	92990–08600	..WASHER, PLATE	1					
18	90501–10071	..SPRING, COMPRESSION	1					
19	617–48331–91	..HOOK, CABLE	1					
20	91690–30012	..PIN, SPRING	1					
21	700–48510–12	.STEERING HOOK ASSY	1					ROPE TYPE
22	689–48511–01	.HOOK, STEERING	1					
23	97075–10040	.BOLT	1					
24	92990–10600	.WASHER, PLATE	1					
25	90185–10051	.NUT, SELF-LOCKING	1					

Part No.	Applicable model
6J8-48501-03-4D	30D
6J8-48501-11	30D

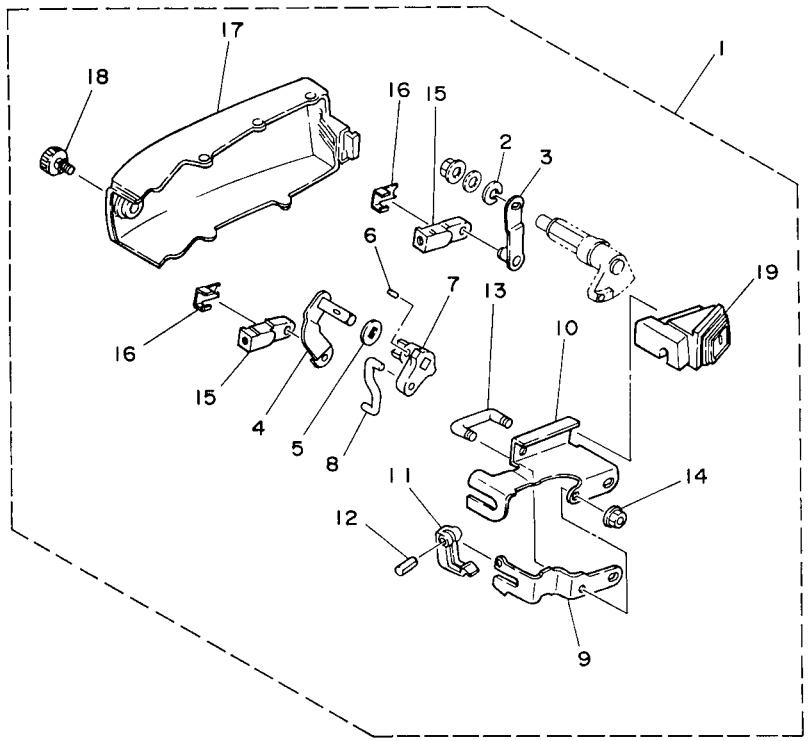

6011100-G410

FIG. 43 REMO CON ATTACHMENT 5

REF. NO.	PART NO.	DESCRIPTION	601R					REMARKS
1	6J8–48501–03–4D	REMOTE CONT. ATTACHMENT ASSY.	1					UR
	6J8–48501–11	REMOTE CONT. ATTACHMENT ASSY.	1					UR
2	92990–08100	.WASHER, SPRING	1					
3	6J8–48534–00	.THROTTLE LEVER, CONTROL	1					
4	6J8–48544–01	.LEVER, SHIFTCONTROL	1					
5	6J8–44177–00	.WASHER	1					
6	90254–03M03	.PIN, SPRING	1					
7	6J8–44173–02	.LEVER, SHIFT CONTROL	1					
8	6J8–42169–01	.JOINT	1					
9	6J8–48531–00	.BRACKET, REMOTE CONTROL 1	1					
10	6J8–48532–00	.BRACKET, REMOTE CONTROL 2	1					
11	682–48538–50	.CLAMP, CABLE 1	1					
12	91690–30012	.PIN, SPRING	1					
13	90109–06M29	.BOLT	1					
14	90179–06M24	.NUT	2					
15	6G8–26363–00	.END, WIRE 1	2					
16	6G8–26364–00	.END, CABLE	2					
17	6J8–42723–51	.COVER, BOTTOM	1					
18	6J8–42846–00	.SCREW	1					
19	6J8–42724–10	.GROMMET	1					

Part No.	Applicable model
66T-48501-01	40X, E40X

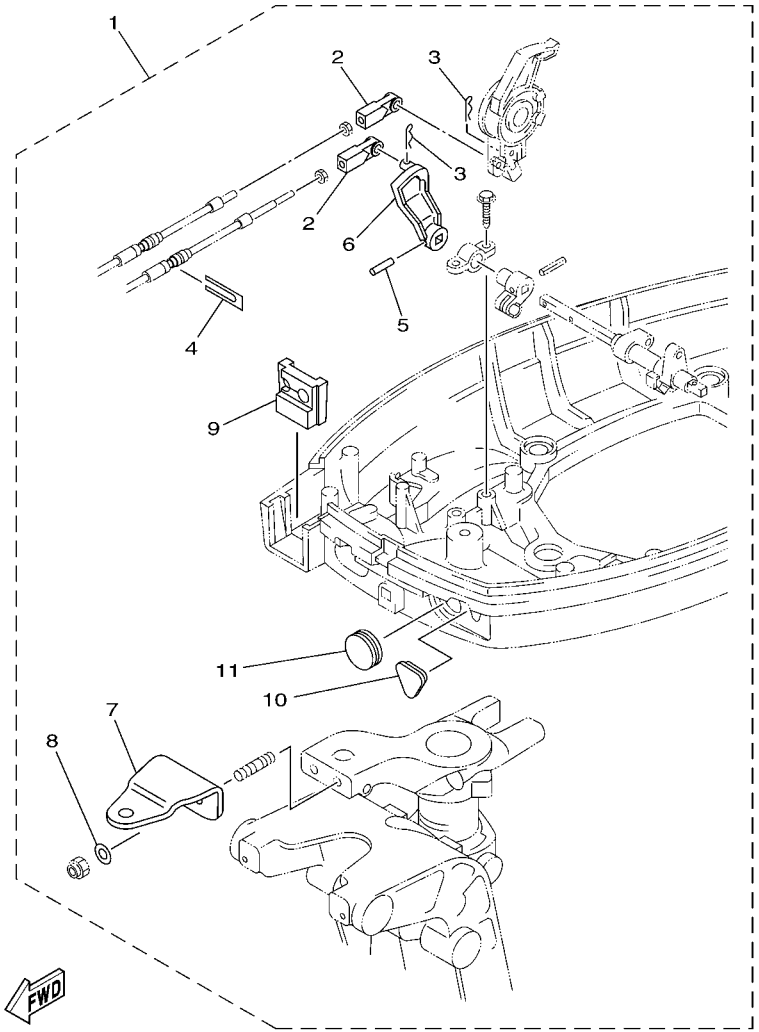

6011100-G420

FIG. 44 REMO CON ATTACHMENT 6

REF. NO.	PART NO.	DESCRIPTION	601R					REMARKS
1	66T–48501–01	REMOTE CONT. ATTACHMENT ASSY.	1					
2	663–48344–00	.CABLE END, REMOTE CONTROL	2					
3	90468–18008	.CLIP	2					
4	6H3–48538–00	.CLAMP, CABLE 1	1					
5	90254–03M04	.PIN, SPRING	1					
6	66T–44125–01	.LEVER, SHIFT ROD	1					
7	65W–48511–00	.HOOK, STEERING	1					
8	90201–10120	.WASHER, PLATE	2					
9	66T–42725–30	.GROMMET	1					
10	65W–26326–10	.GROMMET	1					
11	65W–42726–10	.GROMMET	1					

Part No.	Applicable model
60R-G8501-00	F6A (F6), F8C (F8), FT8D (T8)
6AU-48501-00	F9.9F (F9.9), FT9.9G (T9.9)

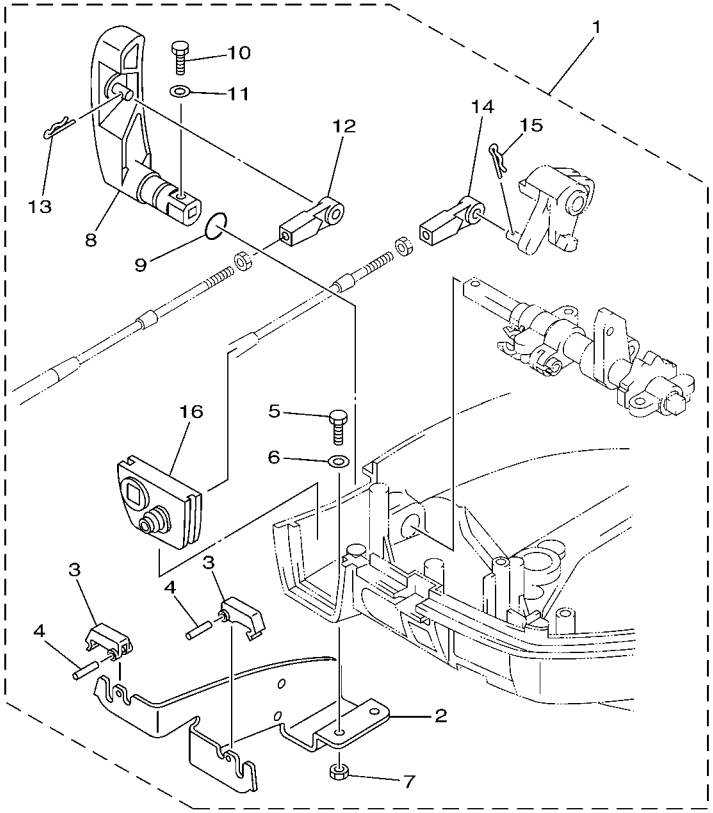

6011100-G430

FIG. 45 REMO CON ATTACHMENT 7

REF. NO.	PART NO.	DESCRIPTION	601R					REMARKS
1	60R–G8501–00	REMOTE CONT. ATTACHMENT ASSY.	1					UR
	6AU–48501–00	REMOTE CONT. ATTACHMENT ASSY.	1					UR
2	68T–48531–00	.BRACKET, REMOTE CONTROL 1	1					
3	682–48538–50	.CLAMP, CABLE 1	2					
4	91690–30012	.PIN, SPRING	2					
5	97095–06012	.BOLT	2					
6	92995–06600	.WASHER	2					
7	95380–06600	.NUT, HEXAGON	2					
8	60R–G4111–10	.HANDLE, GEAR SHIFT	1					FOR 60R-G8501-00
	6AU–44111–10	.HANDLE, GEAR SHIFT	1					FOR 6AU-48501-00
9	93210–12327	.O-RING	1					
10	97095–05016	.BOLT	1					
11	92995–05600	.WASHER	1					
12	663–48344–00	.CABLE END, REMOTE CONTROL	1					
13	90468–18008	.CLIP	1					
14	663–48344–00	.CABLE END, REMOTE CONTROL	1					
15	90468–18008	.CLIP	1					
16	68T–42725–10	.GROMMET	1					

Part No.	Applicable model
6AH-48501-00	F9.9H, F13.5B, F15C (F15), F20B (F20)

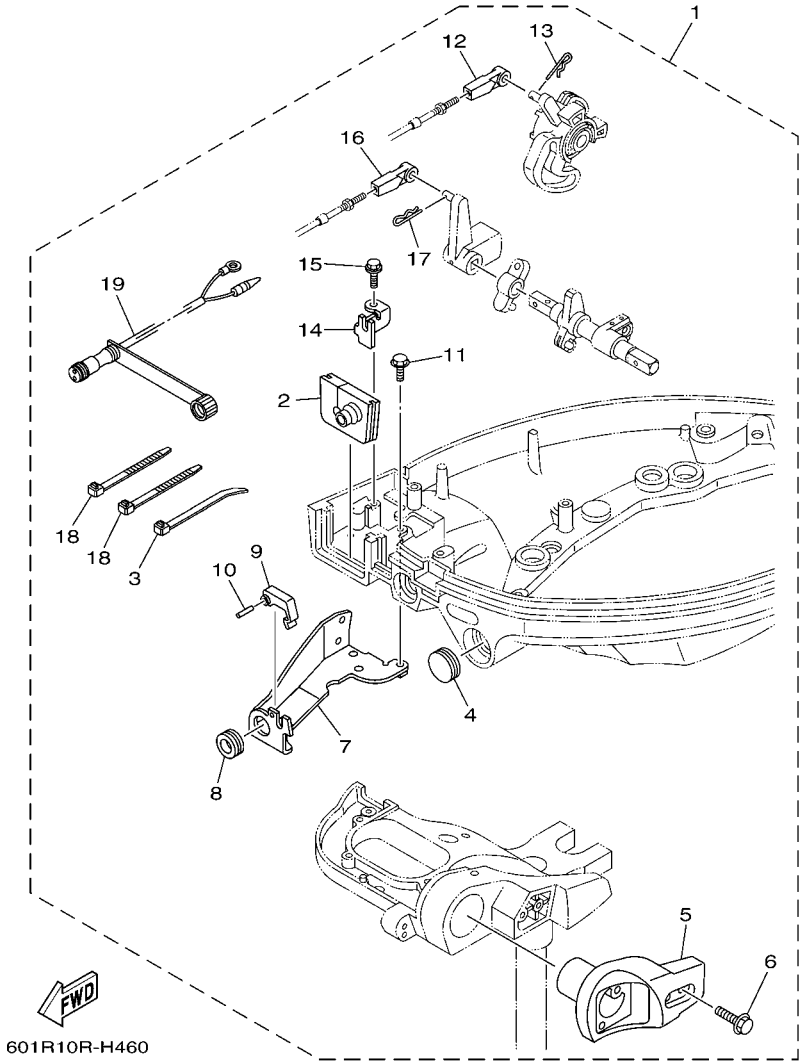

FIG. 46 REMO CON ATTACHMENT 8

REF. NO.	PART NO.	DESCRIPTION	601R					REMARKS
1	6AH–48501–00	REMOTE CONT. ATTACHMENT ASSY.	1					
2	6AH–42724–10	.GROMMET	1					
3	90465–11M10	.CLAMP	1					
4	65W–42726–10	.GROMMET	1					
5	6AH–83773–00	.BRACKET, SWITCH	1					
6	97595–06530	.BOLT, WITH WASHER	2					
7	6AH–48532–00	.BRACKET, REMOTE CONTROL 2	1					
8	90480–19031	.GROMMET	1					
9	682–48538–50	.CLAMP, CABLE 1	1					
10	91690–30012	.PIN, SPRING	1					
11	97595–06514	.BOLT, WITH WASHER	2					
12	663–48344–00	.CABLE END, REMOTE CONTROL	1					
13	90468–18008	.CLIP	1					
14	6AH–48531–00	.BRACKET, REMOTE CONTROL 1	1					
15	90109–06M86	.BOLT	1					
16	663–48344–00	.CABLE END, REMOTE CONTROL	1					
17	90468–18008	.CLIP	1					
18	90465–13M18	.CLAMP	2					
19	6D5–84340–00	.SOCKET CORD ASSY 1	1					

Part No.	Applicable model
65W-48501-00	F20A, F25A (F25), FT25B (T25)

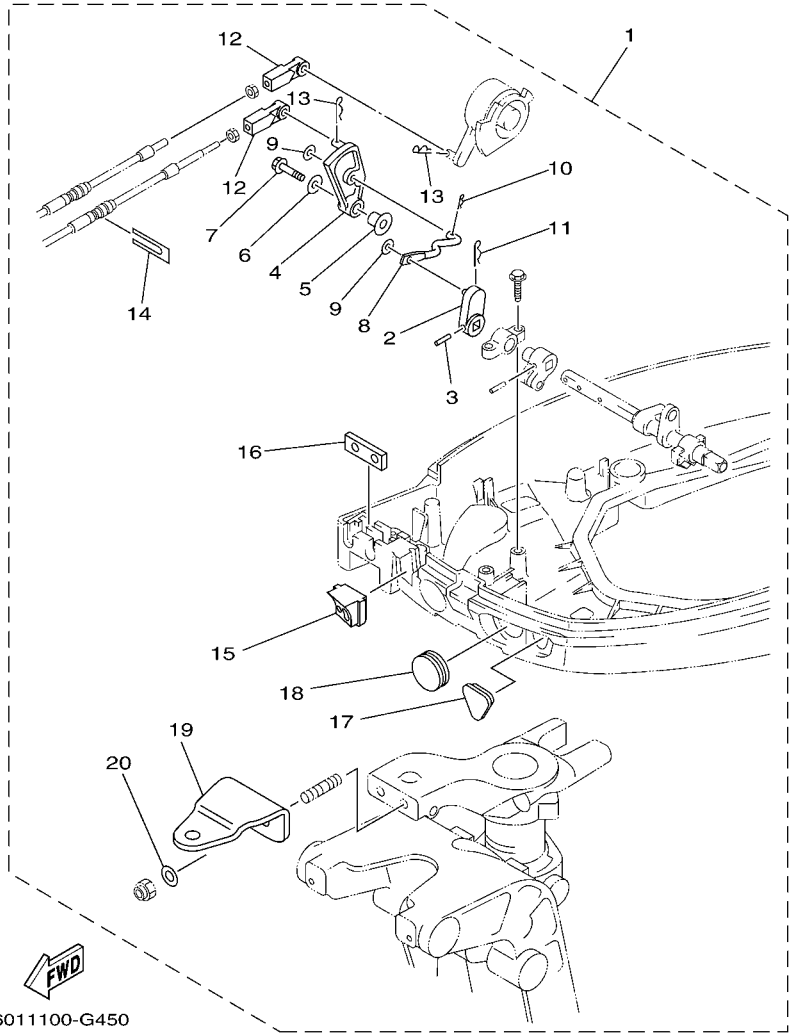

6011100-G450

FIG. 47 REMO CON ATTACHMENT 9

REF. NO.	PART NO.	DESCRIPTION	601R					REMARKS
1	65W–48501–00	REMOTE CONT. ATTACHMENT ASSY.	1					
2	65W–44142–00	.JOINT	1					
3	90254–03M05	.PIN, SPRING	1					
4	65W–44125–00	.LEVER, SHIFT ROD	1					
5	90387–06M29	.COLLAR	1					
6	90201–06M31	.WASHER, PLATE	1					
7	97595–06525	.BOLT, WITH WASHER	1					
8	65W–44192–00	.JOINT, ROD 1	1					
9	90201–05M06	.WASHER, PLATE	2					
10	90468–10005	.CLIP	1					
11	90468–18008	.CLIP	1					
12	663–48344–00	.CABLE END, REMOTE CONTROL	2					
13	90468–18008	.CLIP	2					
14	6H3–48538–00	.CLAMP, CABLE 1	1					
15	65W–42725–21	.GROMMET	1					
16	62Y–42727–00	.GROMMET	1					
17	65W–26326–10	.GROMMET	1					
18	65W–42726–10	.GROMMET	1					
19	65W–48511–00	.HOOK, STEERING	1					
20	90201–10120	.WASHER, PLATE	2					

Part No.	Applicable model
6BL-48501-00	F25D (F25)

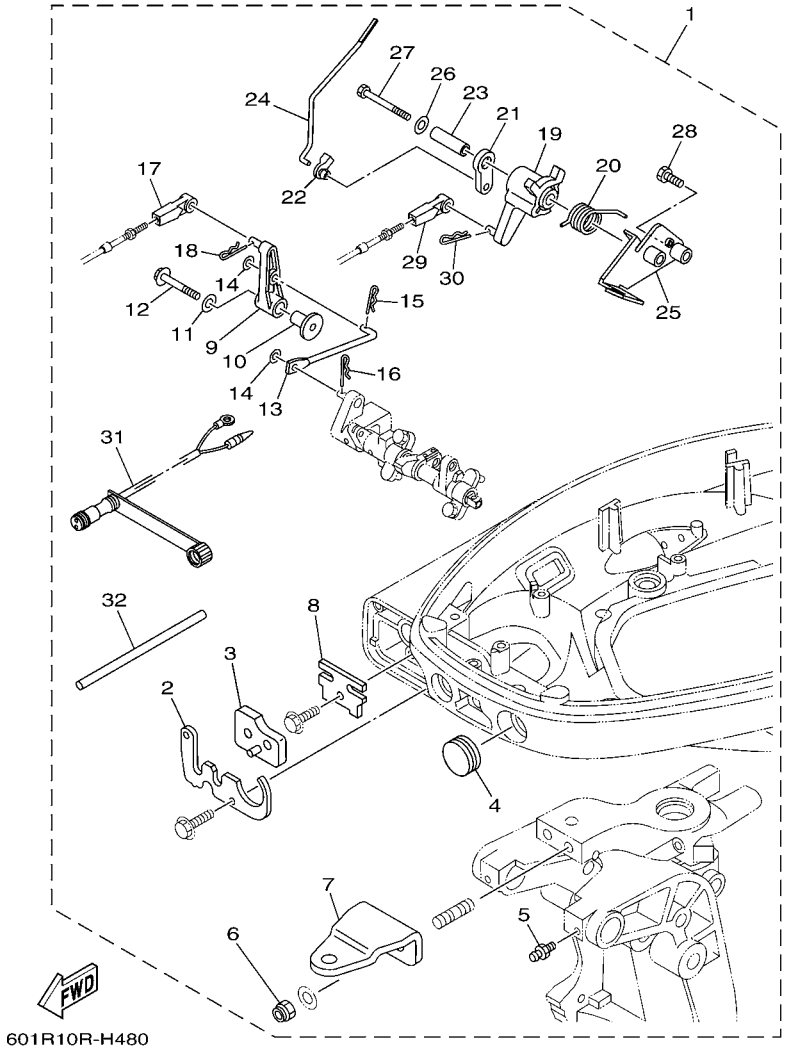

601R10R-H480

FIG. 48 REMO CON ATTACHMENT 10

REF. NO.	PART NO.	DESCRIPTION	601R					REMARKS
1	6BL–48501–00	REMOTE CONT. ATTACHMENT ASSY.	1					
2	6BL–42761–00	.STOPPER	1					
3	6BL–42727–00	.GROMMET	1					
4	65W–42726–10	.GROMMET	1					
5	93700–06M03	.NIPPLE, GREASE	2					
6	90185–10051	.NUT, SELF-LOCKING	2					
7	65W–48511–00	.HOOK, STEERING	1					
8	6BL–48538–00	.CLAMP, CABLE 1	1					
9	6BL–44125–00	.LEVER, SHIFT ROD	1					
10	90387–06M86	.COLLAR	1					
11	90201–06M31	.WASHER, PLATE	1					
12	97595–06535	.BOLT, WITH WASHER	1					
13	6BL–44192–00	.LINK, SHIFT ROD	1					
14	90201–05M06	.WASHER, PLATE	2					
15	90468–10005	.CLIP	1					
16	90468–18001	.CLIP	1					
17	663–48344–00	.CABLE END, REMOTE CONTROL	1					
18	90468–18008	.CLIP	1					
19	6BL–41638–00	.PULLEY	1					
20	90508–20040	.SPRING, TORSION	1					
21	65W–41283–00	.LEVER, FREE ACCEL.	1					
22	6J8–41262–00	.JOINT, CHOKE LEVER	1					
23	90387–06139	.COLLAR	1					
24	6BL–41211–00	.LINK, ACCEL.	1					
25	6BL–14571–10	.BRACKET, THROTTLE	1					
26	90201–06M31	.WASHER, PLATE	1					
27	97095–06065	.BOLT	1					

Part No.	Applicable model
6BL-48501-00	F25D (F25)

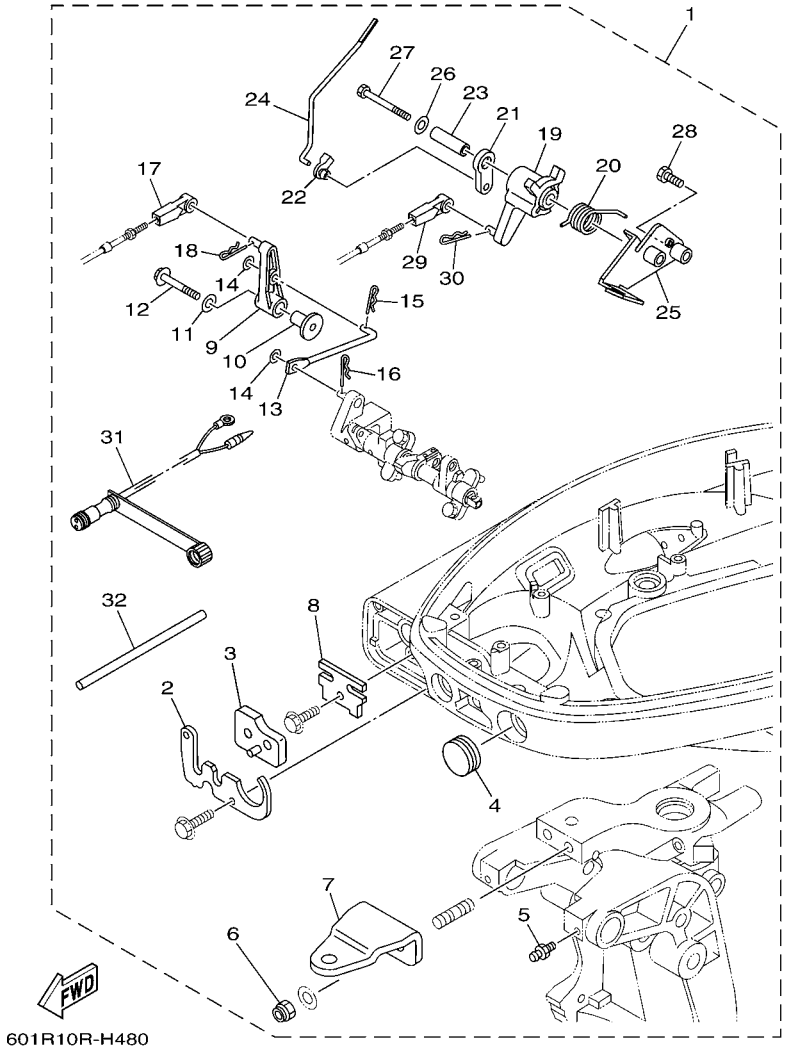

FIG. 48 REMO CON ATTACHMENT 10

REF. NO.	PART NO.	DESCRIPTION	601R					REMARKS
28	97095–06025	.BOLT	1					
29	663–48344–00	.CABLE END, REMOTE CONTROL	1					
30	90468–18008	.CLIP	1					
31	6D5–84340–00	.SOCKET CORD ASSY 1	1					
32	90446–09M42	.HOSE (L160)	2					

STEERING HOOK

Part No.	Applicable model	Remarks
6L2-48511-00	20D (20), 25N (25)	Steering guide type

Part No.	Applicable model	Remarks
6J8-48511-51-4D	25N (25), 30D	Steering guide type

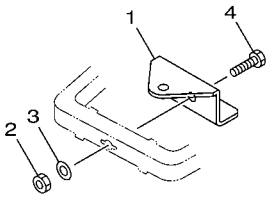

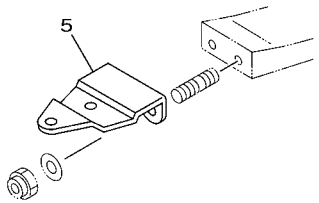

Part No.	Applicable model	Remarks
676-48511-01	40J, E40J, E40G EK40J, EK40G	Steering guide type

Part No.	Applicable model	Remarks
63D-48511-10	40V, 50H (50) 40Y FT50C, F50D	Steering guide type

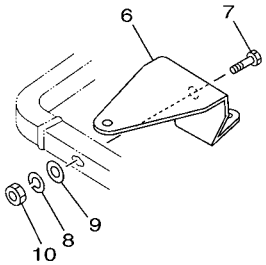

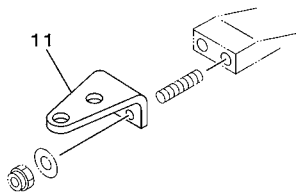

Part No.	Applicable model	Remarks
688-48511-11	75C, 90A (90) 75A, 85A	Steering guide type

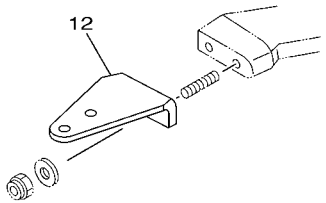

601R10R-H490

FIG. 49 STEERING HOOK 1

REF. NO.	PART NO.	DESCRIPTION	601R					REMARKS
1	6L2–48511–00	HOOK, STEERING	1					STEERING GUIDE
2	90185–10051	NUT, SELF-LOCKING	1					
3	92990–10600	WASHER, PLATE	1					
4	97075–10040	BOLT	1					
5	6J8–48511–51–4D	HOOK, STEERING	1					STEERING GUIDE
6	676–48511–01	HOOK, STEERING	1					STEERING GUIDE
7	97075–10040	BOLT	1					
8	92990–10100	WASHER, SPRING	1					
9	92990–10600	WASHER, PLATE	1					
10	95380–10600	NUT	1					
11	63D–48511–10	HOOK, STEERING	1					STEERING GUIDE
12	688–48511–11	HOOK, STEERING	1					STEERING GUIDE

STEERING HOOK

Part No.	Applicable model	Remarks
63V-48511-01	F8C (F8), FT8D (T8) F9.9F (F9.9) FT9.9G (T9.9) 9.9F (9.9), 15F (15)	Steering guide type

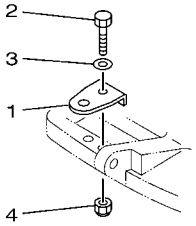

Part No.	Applicable model	Remarks
6AH-48511-00	F13.5B, F15C (F15), F20B (F20)	Steering guide type

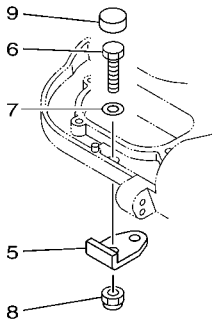

Part No.	Applicable model	Remarks
65W-48511-10	F20A, F25A (F25) F25C, FT25B (T25) F25D (F25) FT25F(T25) F30A (F30), F40B (F40) F30B (F30), F40F (F40) (E) 40X F40D F50F (F50), FT50G (T50) F60C (F60), FT60G (T60)	Steering guide type

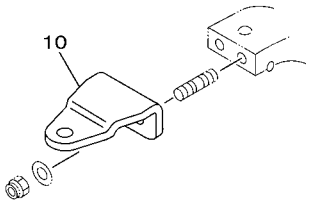

Part No.	Applicable model	Remarks
67F-48511-00	F75B (F75), F80B, F90B (F90) F100D	Steering guide type

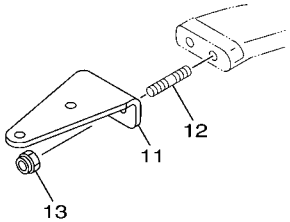

Part No.	Applicable model	Remarks
68V-48511-00	F75C, F80C, F95A, F100B, F115A (F115)	Steering guide type

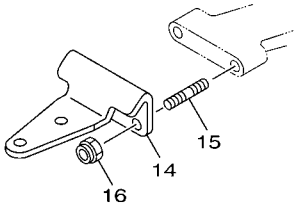

601R10R-H500

FIG. 50 STEERING HOOK 2

REF. NO.	PART NO.	DESCRIPTION	601R					REMARKS
1	63V–48511–01	HOOK, STEERING	1					STEERING GUIDE
2	97075–08035	BOLT	1					
3	92995–08600	WASHER	1					
4	90185–08057	NUT, SELF-LOCKING	1					
5	6AH–48511–00	HOOK, STEERING	1					STEERING GUIDE
6	97095–08025	BOLT	1					
7	92995–08600	WASHER	1					
8	90185–08057	NUT, SELF-LOCKING	1					
9	6AH–44194–00	CAP	1					
10	65W–48511–10	HOOK, STEERING	1					STEERING GUIDE
11	67F–48511–00	HOOK, STEERING	1					STEERING GUIDE
12	90116–10175	BOLT, STUD	2					
13	90185–10051	NUT, SELF-LOCKING	2					
14	68V–48511–00	HOOK, STEERING	1					STEERING GUIDE
15	90116–10175	BOLT, STUD	2					
16	90185–10051	NUT, SELF-LOCKING	2					

STEERING HOOK

Part No.	Applicable model	Remarks
676-48511-10	6C (6), 8C (8) E8D, EK8D	Ball post type

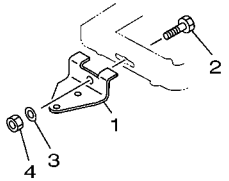

Part No.	Applicable model	Remarks
6G8-48511-10	9.9F (9.9) 15F (15), 30D	Ball post type

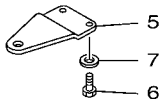

Part No.	Applicable model	Remarks
6J8-48511-01-4D	20D (20), 30D	Ball post type/ Steering guide type

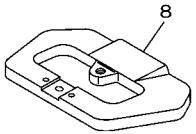

Part No.	Applicable model	Remarks
689-48511-01	25B, 25X, 30H E25B, E30H	Ball post type/ Steering guide type

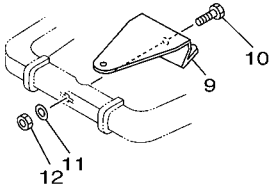

Part No.	Applicable model	Remarks
700-48510-12	6C (6), 8C (8) E8D, EK8D 25B, 25X, 30H E25B, E30H	Rope type

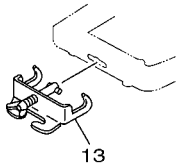

Part No.	Applicable model	Remarks
6G8-48511-00	30D	Rope type

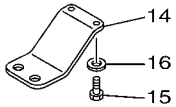

Part No.	Applicable model	Remarks
69G-48511-10	FT8D (T8) FT9.9G (T9.9)	For Linkage to main-engine

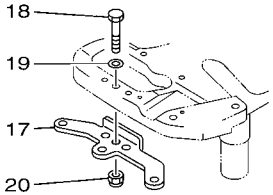

601R10R-H510

FIG. 51 STEERING HOOK 3

REF. NO.	PART NO.	DESCRIPTION	601R					REMARKS
1	676–48511–10	HOOK, STEERING	1					BALL POST TYPE
2	97075–10040	BOLT	1					
3	92990–10600	WASHER, PLATE	1					
4	90185–10051	NUT, SELF-LOCKING	1					
5	6G8–48511–10	HOOK, STEERING	1					BALL POST TYPE
6	97095–06016	BOLT	2					
7	92995–06600	WASHER	2					
8	6J8–48511–01–4D	HOOK, STEERING	1					
9	689–48511–01	HOOK, STEERING	1					
10	97075–10040	BOLT	1					
11	92990–10600	WASHER, PLATE	1					
12	90185–10051	NUT, SELF-LOCKING	1					
13	700–48510–12	STEERING HOOK ASSY	1					ROPE TYPE
14	6G8–48511–00	HOOK, STEERING	1					ROPE TYPE
15	97095–06016	BOLT	2					
16	92995–06600	WASHER	2					
17	69G–48511–10	HOOK, STEERING	1					
18	97075–08035	BOLT	1					
19	92995–08600	WASHER	1					
20	90185–08057	NUT, SELF-LOCKING	1					

Part No.	Applicable model
63V-61350-00	9.9F (9.9), 15F (15), E9.9D, E15D

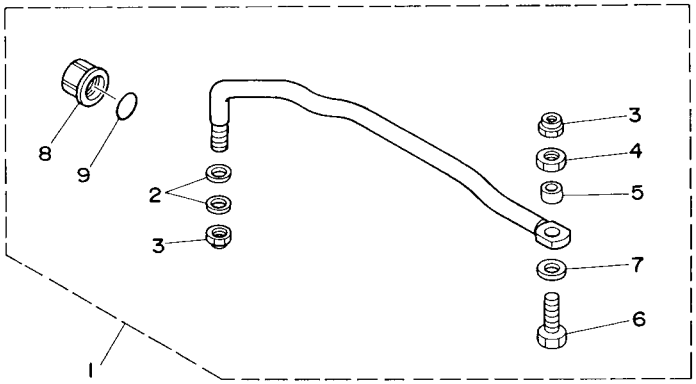

601R10R-H520

FIG. 52 STEERING GUIDE 1

REF. NO.	PART NO.	DESCRIPTION	601R					REMARKS
1	63V–61350–00	STEERING GUIDE ATTACHMENT KIT	1					
2	90201–10M20	.WASHER, PLATE	2					
3	90185–09M01	.NUT, SELF-LOCKING	2					
4	90170–09M03	.NUT	1					
5	90387–10M42	.COLLAR	1					
6	6E5–61355–00	.BOLT	1					
7	90201–10M63	.WASHER, PLATE	1					
8	6E5–43145–01	.CAP, CLAMP BRACKET	1					
9	93210–16275	.O-RING	1					

Part No.	Applicable model
68T-61350-10	F6A (F6), F8C (F8), FT8D (T8) F9.9F (F9.9), FT9.9G (T9.9)

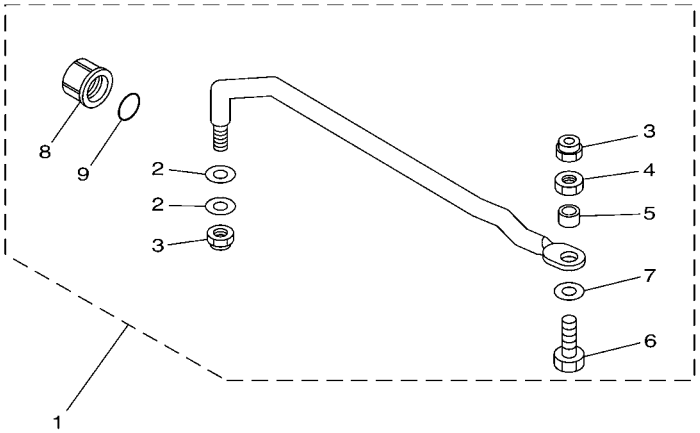

6011100-G500

FIG. 53 STEERING GUIDE 2

REF. NO.	PART NO.	DESCRIPTION	601R					REMARKS
1	68T–61350–10	STEERING GUIDE ATTACHMENT KIT	1					
2	90201–10M20	.WASHER, PLATE	2					
3	90185–09M01	.NUT, SELF-LOCKING	2					
4	90170–09M03	.NUT	1					
5	90387–10M42	.COLLAR	1					
6	6E5–61355–00	.BOLT	1					
7	90201–10M63	.WASHER, PLATE	1					
8	6E5–43145–01	.CAP, CLAMP BRACKET	1					
9	93210–16275	.O-RING	1					

Part No.	Applicable model
6AH-61350-00	F13.5B, F15C (F15), F20B (F20)

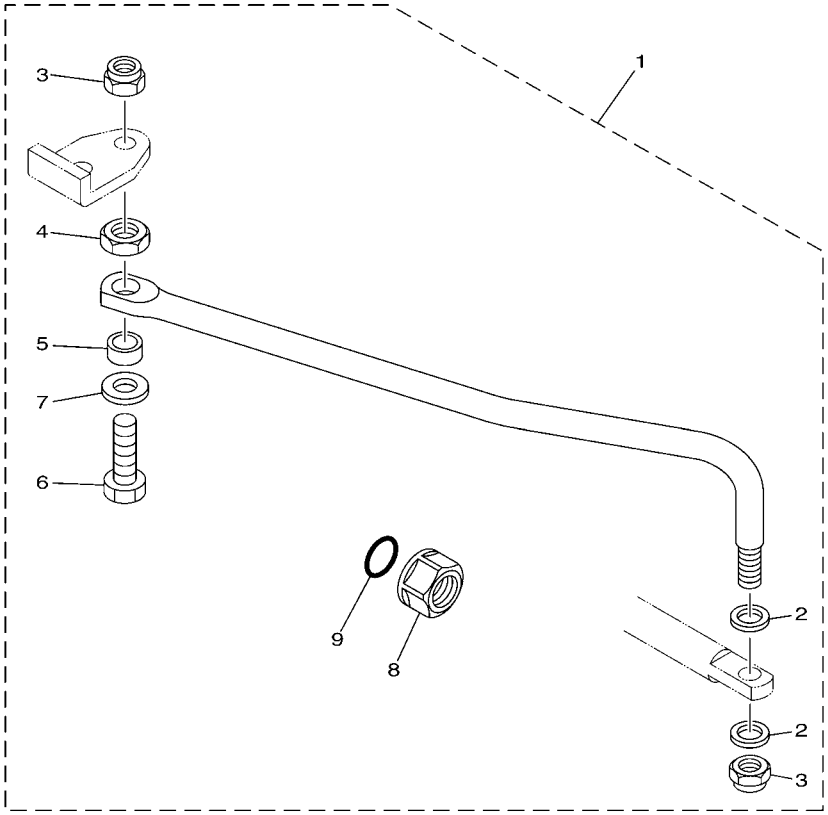

6011100-G510

FIG. 54 STEERING GUIDE 3

REF. NO.	PART NO.	DESCRIPTION	601R					REMARKS
1	6AH–61350–00	STEERING GUIDE ATTACHMENT KIT	1					
2	90201–10M20	.WASHER, PLATE	2					
3	90185–09M01	.NUT, SELF-LOCKING	2					
4	90170–09M03	.NUT	1					
5	90387–10M42	.COLLAR	1					
6	6E5–61355–00	.BOLT	1					
7	90201–10M63	.WASHER, PLATE	1					
8	6E5–43145–01	.CAP, CLAMP BRACKET	1					
9	93210–16275	.O-RING	1					

Part No.	Applicable model
689-61350-02	20D (20), 25N, 25B, 30H, 30D, 40J, E40G EK40J, E25B, E30H

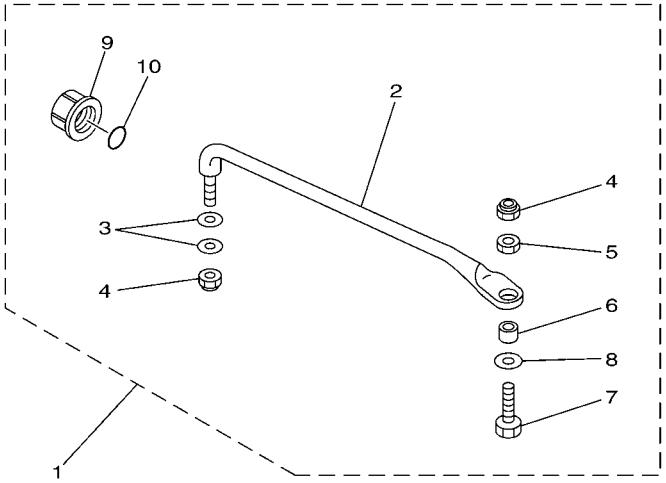

601R10R-H550

FIG. 55 STEERING GUIDE 4

REF. NO.	PART NO.	DESCRIPTION	601R					REMARKS
1	689–61350–02	STEERING GUIDE ATTACHMENT KIT	1					
2	689–61351–01	.ROD, STEERING LINK	1					
3	90201–10M20	.WASHER, PLATE	2					
4	90185–09M01	.NUT, SELF-LOCKING	2					
5	90170–09M03	.NUT	1					
6	90387–10M42	.COLLAR	1					
7	6E5–61355–00	.BOLT	1					
8	90201–10M63	.WASHER, PLATE	1					
9	6E5–43145–01	.CAP, CLAMP BRACKET	1					
10	93210–16275	.O-RING	1					

Part No.	Applicable model
63D-61350-00	40V, 50H (50), 40Y, FT50C, F50D

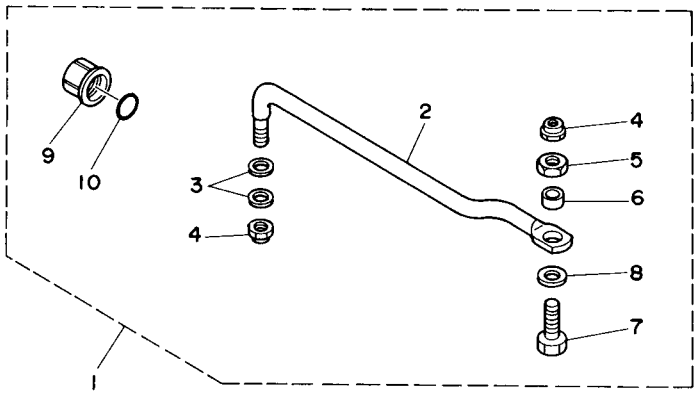

6011100-G530

FIG. 56 STEERING GUIDE 5

REF. NO.	PART NO.	DESCRIPTION	601R					REMARKS
1	63D–61350–00	STEERING GUIDE ATTACHMENT KIT	1					
2	63D–61351–00	.ROD, STEERING LINK	1					
3	90201–10M20	.WASHER, PLATE	2					
4	90185–09M01	.NUT, SELF-LOCKING	2					
5	90170–09M03	.NUT	1					
6	90387–10M42	.COLLAR	1					
7	90101–09M01	.BOLT	1					
8	90201–10M63	.WASHER, PLATE	1					
9	6E5–43145–01	.CAP, CLAMP BRACKET	1					
10	93210–16275	.O-RING	1					

Part No.	Applicable model
65W-61350-00	E40X, 40X, F20A, F25A (F25), F25C, FT25B (T25), F30A (F30), F40B (F40), F50F (F50), FT50G (T50), F40D F60C (F60), FT60D (T60)

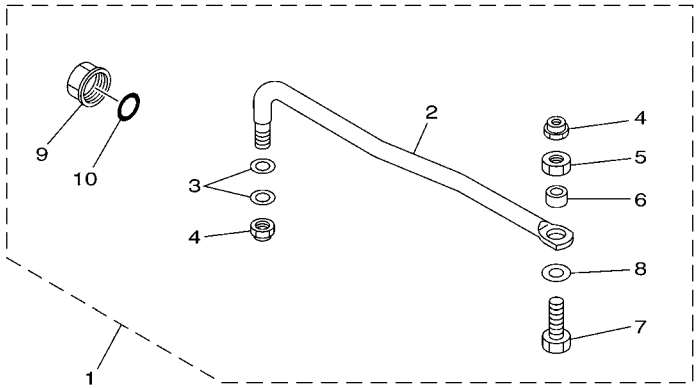

6011100-G540

FIG. 57 STEERING GUIDE 6

REF. NO.	PART NO.	DESCRIPTION	601R					REMARKS
1	65W–61350–00	STEERING GUIDE ATTACHMENT KIT	1					
2	65W–61351–00	.ROD, STEERING LINK	1					
3	90201–10M20	.WASHER, PLATE	2					
4	90185–09M01	.NUT, SELF-LOCKING	2					
5	90170–09M03	.NUT	1					
6	90387–10M42	.COLLAR	1					
7	90101–09M01	.BOLT	1					
8	90201–10M63	.WASHER, PLATE	1					
9	6E5–43145–01	.CAP, CLAMP BRACKET	1					
10	93210–16275	.O-RING	1					

Part No.	Applicable model
697-61350-00	55B
688-61350-10	60F, 70B (70), 75C, 90A (90) 75A, 85A, E60H

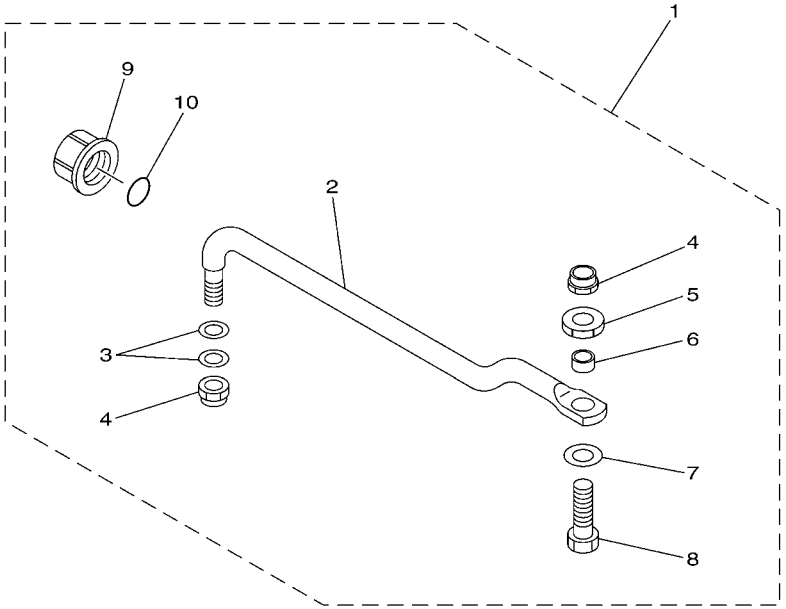

6011100-G550

FIG. 58 STEERING GUIDE 7

REF. NO.	PART NO.	DESCRIPTION	601R					REMARKS
1	697–61350–00	STEERING GUIDE ATTACHMENT KIT	1					UR
	688–61350–10	STEERING GUIDE ATTACHMENT KIT	1					UR
2	697–61351–00	.ROD, STEERING LINK	1					FOR 697-61350-00
	688–61351–10	.ROD, STEERING LINK	1					FOR 688-61350-10
3	90201–10M20	.WASHER, PLATE	2					
4	90185–09M01	.NUT, SELF-LOCKING	2					
5	90170–09M03	.NUT	1					
6	90387–10M42	.COLLAR	1					
7	90201–10M63	.WASHER, PLATE	1					
8	6E5–61355–00	.BOLT	1					
9	6E5–43145–01	.CAP, CLAMP BRACKET	1					
10	93210–16275	.O-RING	1					

Part No.	Applicable model
67F-61350-00	F75B (F75), F80B F90B (F90), F100D

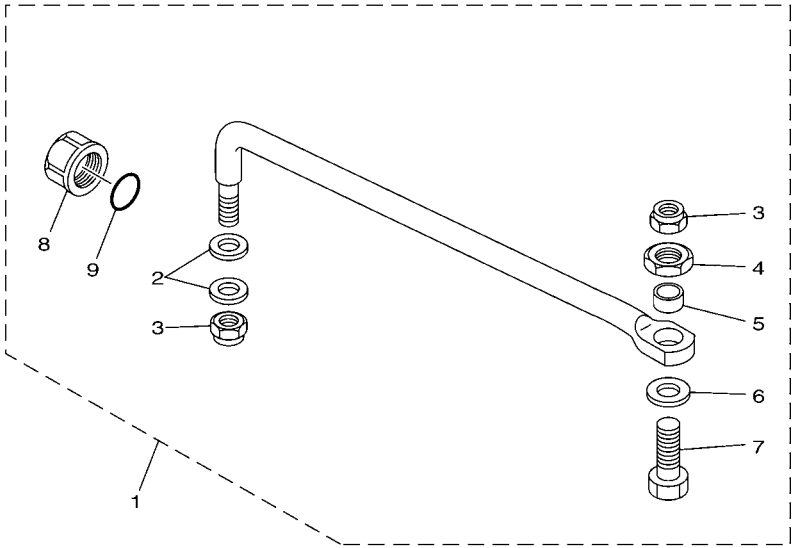

6011100-G560

FIG. 59 STEERING GUIDE 8

REF. NO.	PART NO.	DESCRIPTION	601R					REMARKS
1	67F–61350–00	STEERING GUIDE ATTACHMENT KIT	1					
2	90201–10M20	.WASHER, PLATE	2					
3	90185–09M01	.NUT, SELF-LOCKING	2					
4	90170–09M03	.NUT	1					
5	90387–10M42	.COLLAR	1					
6	90201–10M63	.WASHER, PLATE	1					
7	90101–09M01	.BOLT	1					
8	6E5–43145–01	.CAP, CLAMP BRACKET	1					
9	93210–16275	.O-RING	1					

Part No.	Applicable model
6E5-61350-02	F75C, F95A, F100B F115 – F250, 115 – 300

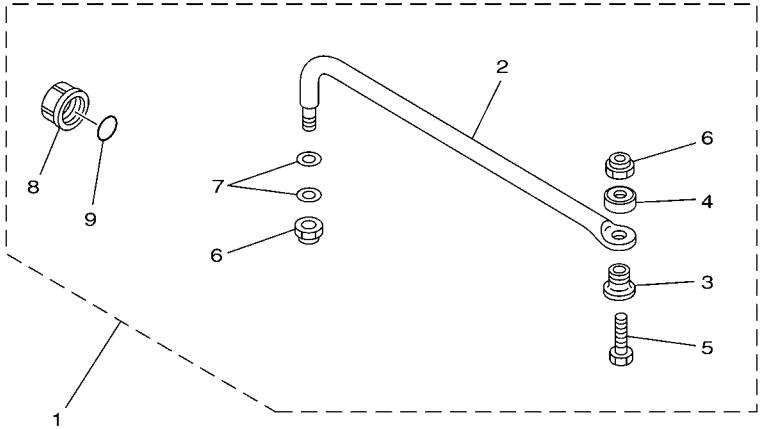

6011100-G570

FIG. 60 STEERING GUIDE 9

REF. NO.	PART NO.	DESCRIPTION	601R					REMARKS
1	6E5–61350–02	STEERING GUIDE ATTACHMENT KIT	1					
2	6E5–61351–01	.ROD, STEERING LINK	1					
3	90387–10M61	.COLLAR	1					
4	90560–12M01	.SPACER	1					
5	6E5–61355–00	.BOLT	1					
6	90185–09M01	.NUT, SELF-LOCKING	2					
7	90201–10M20	.WASHER, PLATE	2					
8	6E5–43145–01	.CAP, CLAMP BRACKET	1					
9	93210–16275	.O-RING	1					

Part No.	Applicable model
6E5-61301-01	40 – 300, F30 – F250

Twin engine tie-bar kit
Adjustable distance : 600 mm (23.6 in.) – 800 mm (31.5 in.)

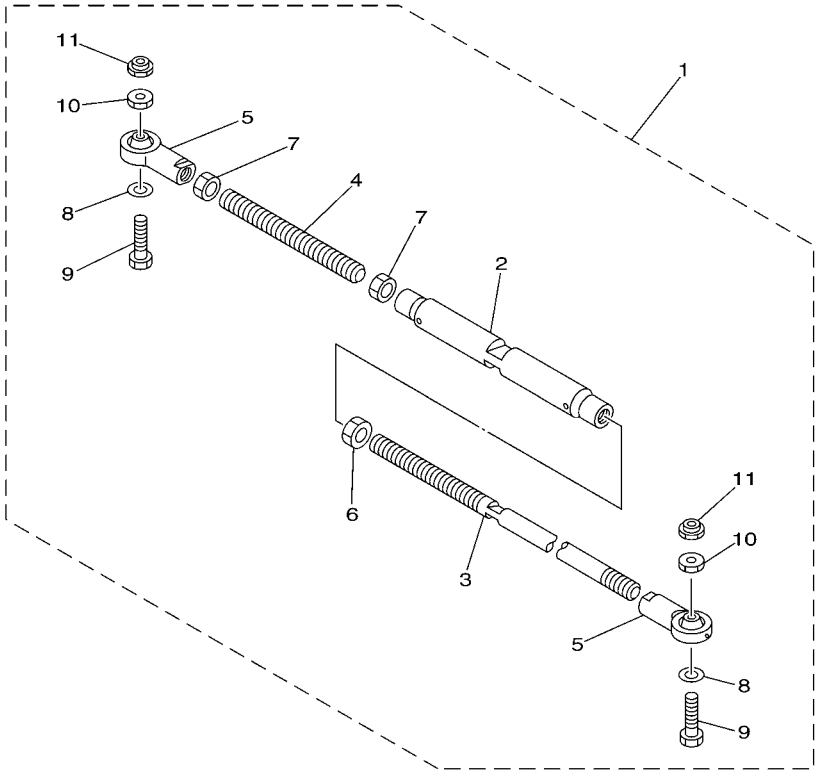

6011100-G580

FIG. 61 STEERING GUIDE 10

REF. NO.	PART NO.	DESCRIPTION	601R					REMARKS
1	6E5–61301–01	TWIN KIT (L:600-800MM)	1					
2	6E5–61313–00	.ADJUSTER	1					
3	6E5–61311–11	.TIE BAR	1					
4	6E5–61315–00	.TIE BAR	1					
5	6E5–61303–00	.STEERING AXLE COMP.	2					
6	90170–14M06	.NUT	1					
7	95380–14700	.NUT	2					
8	90201–10M76	.WASHER, PLATE	2					
9	90101–09M70	.BOLT	2					
10	90170–09M05	.NUT	2					
11	90185–09M01	.NUT, SELF-LOCKING	2					

Part No.	Applicable model
6BG-61350-00	F25D (F25), FT25F (T25) F30B (F30), F40F (F40)

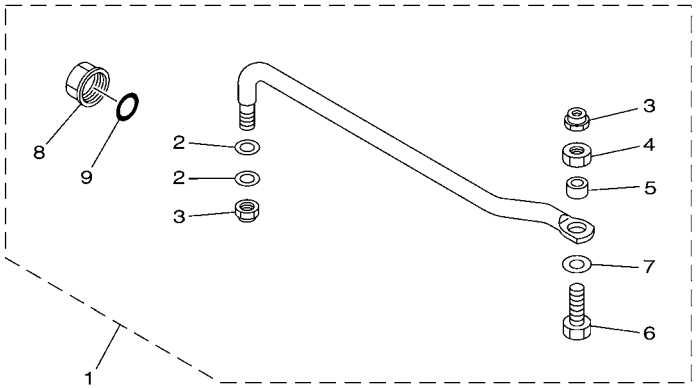

601R10R-H620

FIG. 62 STEERING GUIDE 11

REF. NO.	PART NO.	DESCRIPTION	601R					REMARKS
1	6BG–61350–00	STEERING GUIDE ATTACHMENT KIT	1					
2	90201–10M20	.WASHER, PLATE	2					
3	90185–09M01	.NUT, SELF-LOCKING	2					
4	90170–09M03	.NUT	1					
5	90387–10M42	.COLLAR	1					
6	90101–09M01	.BOLT	1					
7	90201–10M63	.WASHER, PLATE	1					
8	6E5–43145–01	.CAP, CLAMP BRACKET	1					
9	93210–16275	.O-RING	1					

PART NO.	REF. NO.
6BL–14571–10	48 – 25
65W–26326–10	44 – 10
	47 – 17
6G8–26363–00	41 – 15
	43 – 15
6G8–26364–00	41 – 16
	43 – 16
6BL–41211–00	48 – 24
6J8–41262–00	48 – 22
65W–41283–00	48 – 21
6BL–41638–00	48 – 19
63V–42154–00	40 – 11
6L2–42154–01	41 – 6
6J8–42169–01	43 – 8
6L2–42191–01	41 – 7
63V–42192–00	40 – 15
6L2–42192–20	41 – 8
6J8–42723–51	43 – 17
6AH–42724–10	46 – 2
6J8–42724–10	43 – 19
68T–42725–10	45 – 16
65W–42725–21	47 – 15
66T–42725–30	44 – 9
65W–42726–10	44 – 11
	46 – 4
	47 – 18
	48 – 4
62Y–42727–00	47 – 16
6BL–42727–00	48 – 3
6BL–42761–00	48 – 2
6X4–42821–00	13 – 53
6J8–42846–00	43 – 18
6E5–43145–01	52 – 8
	53 – 8
	54 – 8
	55 – 9
	56 – 9
	57 – 9
	58 – 9
	59 – 8
	60 – 8
	62 – 8
6AU–44111–10	45 – 8
65W–44125–00	47 – 4
6BL–44125–00	48 – 9
66T–44125–01	44 – 6
65W–44142–00	47 – 2
6J8–44173–02	43 – 7

PART NO.	REF. NO.
6J8–44177–00	43 – 5
6X3–44191–00	12 – 73
6X6–44191–00	18 – 66
	19 – 72
	20 – 72
6X7–44191–00	22 – 16
65W–44192–00	47 – 8
6BL–44192–00	48 – 13
6AH–44194–00	50 – 9
701–48101–23	1 – 1
	5 – 1
701–48101–51	1 – 1
	5 – 1
701–48101–G1	1 – 1
	5 – 1
701–48102–23	1 – 1
	5 – 1
701–48102–51	1 – 1
	5 – 1
701–48102–G1	1 – 1
	5 – 1
6X3–48111–00	12 – 58
6X0–48116–00	12 – 72
6X6–48118–00	18 – 35
	19 – 41
	20 – 41
	22 – 40
6X5–48119–00	13 – 61
6X7–48119–00	22 – 12
6X6–48119–03	18 – 12
6X5–48119–10	13 – 60
6X6–48119–10	19 – 13
	20 – 13
704–48119–31	10 – 59
704–48119–41	11 – 68
704–48119–B0	9 – 63
6X0–48121–00	12 – 37
6X0–48127–00	12 – 53
6X5–48127–00	13 – 34
6X6–48127–00	18 – 70
	19 – 76
	20 – 75
6X7–48127–00	20 – 92
	22 – 43
EL8–48127–00	9 – 25
	10 – 23
	11 – 23
	12 – 23

PART NO.	REF. NO.
EL8–48127–00	18 – 11
	19 – 12
	20 – 12
	22 – 44
6X5–48127–10	13 – 39
6X5–48127–20	13 – 41
6X0–48128–00	12 – 64
	20 – 90
	22 – 57
6X6–48128–00	18 – 71
	19 – 77
	20 – 76
	22 – 11
6X7–48128–00	22 – 65
703–48128–00	13 – 35
704–48128–00	9 – 2
	10 – 2
	11 – 2
	11 – 62
6X3–48129–00	12 – 67
6X5–48129–00	13 – 36
6X6–48129–00	18 – 59
	19 – 65
	20 – 65
6A5–48129–10	9 – 12
701–48130–23	1 – 1
	6 – 1
701–48130–E0	1 – 1
	6 – 1
701–48133–00	5 – 42
	6 – 42
6X0–48138–00	12 – 4
701–48138–50	5 – 39
701–48140–E0	1 – 1
	6 – 1
6X5–48144–00	13 – 29
6X6–48144–00	18 – 58
704–48144–00	9 – 53
6X5–48144–10	13 – 28
6X6–48144–10	18 – 26
	19 – 31
	20 – 31
704–48144–10	10 – 50
704–48144–20	11 – 50
6X5–48152–00	13 – 6
703–48152–00	7 – 57
	8 – 57
701–48152–11	5 – 13

PART NO.	REF. NO.
701–48152–11	6 – 13
701–48152–20	5 – 13
	6 – 13
6X0–48153–00	12 – 47
703–48153–00	7 – 3
	8 – 3
	13 – 22
704–48153–00	9 – 59
	10 – 55
	11 – 55
701–48153–12	5 – 33
	6 – 33
6X0–48155–00	12 – 60
6X0–48156–00	12 – 65
	22 – 63
704–48156–00	11 – 63
	19 – 48
	20 – 48
6X6–48158–00	18 – 38
	19 – 44
	20 – 44
	22 – 33
EL8–48158–00	12 – 30
EL8–48164–00	9 – 43
	10 – 41
	11 – 41
	12 – 38
704–48166–00	9 – 60
	10 – 56
	11 – 56
6X6–48167–00	18 – 16
6X7–48167–00	22 – 14
704–48167–01	10 – 61
6X6–48167–10	19 – 17
	20 – 17
6X7–48167–10	22 – 13
704–48167–11	11 – 69
6X6–48167–20	19 – 18
	20 – 18
6X6–48167–50	18 – 17
6X6–48167–60	19 – 19
	20 – 19
6X6–48171–00	18 – 9
	19 – 10
	20 – 10
	22 – 9
6X5–48175–00	13 – 71
6X6–48175–00	18 – 46

PART NO.	REF. NO.
6X6–48175–00	18 – 46
	19 – 54
	19 – 54
	20 – 54
6X6–48175–10	18 – 67
	19 – 73
6X5–48176–00	13 – 65
6X6–48176–00	18 – 21
704–48176–00	9 – 54
	10 – 51
6X6–48176–10	19 – 24
	20 – 24
	38 – 4
6X7–48176–10	22 – 66
704–48176–10	11 – 51
6X6–48176–50	18 – 68
	19 – 74
	20 – 73
6X6–48176–60	18 – 69
	19 – 75
	20 – 74
704–48178–00	11 – 66
	12 – 34
704–48178–10	9 – 64
	10 – 60
6X0–48187–00	12 – 11
6X6–48189–00	18 – 32
	19 – 38
	20 – 38
6X7–48189–00	22 – 20
703–48189–00	7 – 17
	8 – 17
	13 – 19
701–48189–11	5 – 31
	6 – 31
EL8–48191–00	9 – 18
	10 – 16
	11 – 16
	12 – 19
703–48192–00	9 – 55
	12 – 44
704–48192–00	9 – 46
	10 – 44
	11 – 44
704–48192–P0	10 – 52
	11 – 52
6X0–48193–00	12 – 63
6X6–48193–00	18 – 34

PART NO.	REF. NO.
6X6–48193–00	19 – 40
	20 – 40
	22 – 39
704–48193–00	9 – 50
	12 – 42
701–48196–11	5 – 7
	6 – 7
701–48197–10	5 – 3
	6 – 3
703–48198–00	7 – 14
	8 – 14
	13 – 16
	18 – 33
	19 – 39
	20 – 39
	22 – 38
701–48198–10	5 – 15
	6 – 15
6X6–481A0–01	18 – 24
	19 – 29
6X7–481A0–01	22 – 18
6X6–481A0–11	20 – 29
6X6–481A0–21	19 – 82
6X6–481A0–31	20 – 83
703–48201–16	2 – 1
	8 – 1
703–48201–A3	2 – 1
	8 – 1
703–48202–15	2 – 1
	8 – 1
703–48203–15	2 – 1
	8 – 1
703–48203–A3	2 – 1
	8 – 1
704–48203–P1	3 – 2
	10 – 1
703–48204–13	2 – 1
	7 – 1
6X6–48205–00	15 – 1
	18 – 1
6X6–48205–10	15 – 1
	18 – 1
703–48205–17	2 – 1
	8 – 1
6X6–48205–20	15 – 1
	18 – 1
703–48205–A5	2 – 1
	8 – 1

PART NO.	REF. NO.
704–48205–B1	3 – 1
	9 – 1
704–48205–P1	3 – 2
	10 – 1
6X7–48206–00	21 – 1
	22 – 1
6X3–48206–01	4 – 1
	12 – 1
704–48206–P1	3 – 2
	10 – 1
6X6–48207–00	16 – 1
	19 – 1
6X5–48207–01	4 – 2
	13 – 1
6X6–48207–10	16 – 1
	19 – 1
703–48207–17	2 – 1
	8 – 1
6X6–48207–20	16 – 1
	19 – 1
703–48207–A5	2 – 1
	8 – 1
704–48207–P1	3 – 3
	11 – 1
6X6–48208–20	17 – 1
	20 – 1
6X6–48208–30	17 – 1
	20 – 1
703–48208–A4	2 – 1
	8 – 1
703–48210–16	2 – 1
	7 – 1
6X0–48211–00	12 – 25
703–48211–01	7 – 61
	8 – 61
6X6–48211–10	20 – 91
	22 – 51
6X6–48212–00	18 – 25
	19 – 30
	20 – 30
6X7–48212–00	22 – 19
703–48212–00	7 – 58
	8 – 58
EL8–48212–00	12 – 74
6X5–48213–00	13 – 58
6X6–48213–00	18 – 43
	19 – 51
	20 – 51

PART NO.	REF. NO.
701–48213–00	5 – 19
	6 – 19
703–48213–00	7 – 59
	8 – 59
EL8–48213–00	12 – 75
6X5–48214–00	13 – 63
6X5–48214–10	13 – 64
6X5–48215–00	13 – 80
6X6–48215–00	18 – 13
6X7–48215–00	22 – 17
703–48215–00	7 – 43
	8 – 43
704–48215–00	9 – 14
6X5–48215–10	13 – 81
6X6–48215–10	19 – 15
6X6–48215–20	20 – 15
704–48215–20	10 – 12
704–48215–30	11 – 12
6X6–48216–00	18 – 14
703–48216–00	7 – 65
6X6–48216–10	19 – 16
703–48216–10	7 – 66
6X6–48216–20	20 – 16
703–48218–00	8 – 64
6X5–48219–00	13 – 67
6X6–48219–00	18 – 18
703–48219–00	7 – 30
	8 – 30
6X6–48219–10	19 – 20
	20 – 20
6X6–48219–20	19 – 21
	20 – 21
704–48219–B0	9 – 52
704–48219–P0	10 – 49
	11 – 49
703–48220–15	2 – 1
	7 – 1
6X3–48221–00	12 – 55
6X5–48221–00	13 – 26
6X6–48221–00	18 – 3
	19 – 3
	20 – 3
6X7–48221–00	22 – 3
701–48221–00	5 – 6
	6 – 6
703–48221–00	7 – 56
	8 – 56
6X5–48221–10	13 – 27

PART NO.	REF. NO.
704–48221–B0	9 – 62
704–48221–P0	10 – 58
	11 – 67
6X5–48222–00	13 – 31
6X6–48222–00	18 – 4
	19 – 4
	20 – 4
6X7–48222–00	22 – 4
701–48222–00	5 – 27
	6 – 27
703–48222–00	7 – 27
	8 – 27
6X3–48222–01	12 – 48
6X5–48222–10	13 – 33
6X6–48222–10	19 – 6
	20 – 6
703–48222–10	7 – 27
	8 – 27
6X5–48222–20	13 – 66
6X5–48222–30	13 – 85
704–48222–B0	9 – 34
704–48222–P0	10 – 32
	11 – 32
6X0–48223–00	12 – 54
6X7–48223–00	22 – 6
703–48223–00	7 – 28
	8 – 28
6X5–48224–00	13 – 13
6X6–48224–00	18 – 5
	19 – 5
	20 – 5
6X7–48224–00	22 – 5
703–48224–00	7 – 55
	8 – 55
6X6–48224–10	18 – 6
	19 – 7
	20 – 7
6X7–48224–10	22 – 7
6X3–48225–00	12 – 57
6X5–48225–00	13 – 68
6X6–48225–00	19 – 25
	20 – 25
6X7–48225–00	22 – 15
703–48225–00	7 – 29
	8 – 29
6X3–48225–10	12 – 56
6X3–48225–20	9 – 45
	10 – 43

PART NO.	REF. NO.
6X3–48225–20	11 – 43
	12 – 59
703–48226–00	7 – 26
	8 – 26
703–48227–00	7 – 24
	8 – 24
	12 – 49
	22 – 8
6X5–48228–00	13 – 73
6X6–48228–00	18 – 44
	19 – 52
	20 – 52
6X7–48228–00	22 – 25
6X5–48229–00	13 – 30
701–48229–00	5 – 26
	6 – 26
6X5–48229–10	13 – 32
704–48229–B1	9 – 37
704–48229–P1	10 – 35
	11 – 35
704–48229–R0	10 – 35
	11 – 60
703–48230–15	2 – 1
	7 – 1
704–48231–00	10 – 25
	11 – 25
EL8–48231–00	9 – 27
	12 – 26
6X5–48232–00	13 – 2
701–48232–00	5 – 30
	6 – 30
703–48232–00	7 – 62
	8 – 62
EL8–48232–00	9 – 42
704–48232–P1	10 – 40
	11 – 40
6X7–48233–00	22 – 23
704–48233–00	10 – 53
	11 – 53
EL8–48233–00	9 – 56
	12 – 45
6X6–48233–01	18 – 28
	19 – 34
	20 – 34
6X6–48234–00	18 – 36
	19 – 42
	20 – 42
	22 – 37

PART NO.	REF. NO.
701–48234–00	5 – 5
	6 – 5
703–48234–00	7 – 18
	8 – 18
	13 – 20
704–48234–00	10 – 48
	11 – 48
EL8–48234–00	9 – 51
	12 – 43
701–48235–00	5 – 2
	6 – 2
702–48235–00	9 – 57
	12 – 46
703–48235–00	7 – 4
	8 – 4
	13 – 5
704–48235–00	10 – 54
	11 – 54
6X6–48236–00	18 – 31
	19 – 37
	20 – 37
	22 – 34
701–48236–00	5 – 8
	6 – 8
703–48236–00	7 – 16
	8 – 16
	13 – 18
6X6–48237–00	18 – 30
	19 – 36
	20 – 36
	22 – 35
702–48237–00	5 – 9
	6 – 9
6X6–48238–00	18 – 29
	19 – 35
	20 – 35
	22 – 36
702–48238–00	5 – 10
	6 – 10
703–48238–00	7 – 22
	8 – 22
	13 – 24
704–48238–00	9 – 41
	10 – 39
	11 – 39
	12 – 36
6X6–48241–00	18 – 61
	19 – 67

PART NO.	REF. NO.
6X6–48241–00	20 – 67
	22 – 29
EL8–48241–00	10 – 26
	11 – 26
	12 – 27
EL8–48241–10	9 – 28
6X7–48242–00	22 – 24
704–48242–00	9 – 44
6X6–48242–01	18 – 27
	19 – 32
	20 – 32
704–48242–10	10 – 42
	11 – 42
EL8–48242–10	12 – 39
6X6–48242–11	19 – 33
	20 – 33
701–48243–00	5 – 14
	6 – 14
703–48243–00	7 – 15
	8 – 15
	13 – 17
703–48244–00	7 – 21
	8 – 21
	13 – 23
EL8–48244–00	9 – 32
	10 – 30
	11 – 30
	12 – 32
703–48245–00	7 – 11
	8 – 11
EL8–48245–00	9 – 33
	10 – 31
	11 – 31
	12 – 33
6X6–48245–01	18 – 62
	19 – 68
	20 – 68
	22 – 28
6X5–48246–00	13 – 62
701–48246–00	5 – 24
	6 – 24
	9 – 5
	10 – 5
	11 – 5
703–48246–00	7 – 23
	8 – 23
	13 – 74
701–48248–00	5 – 12

PART NO.	REF. NO.
701–48248–00	6 – 12
	7 – 13
	8 – 13
	9 – 40
	10 – 38
	11 – 38
	12 – 35
	13 – 15
701–48249–00	5 – 11
	6 – 11
703–48250–17	2 – 1
	7 – 1
EL8–48251–00	9 – 3
	10 – 3
	11 – 3
	12 – 2
701–48252–00	5 – 4
	6 – 4
703–48252–00	7 – 12
	8 – 12
	13 – 14
EL8–48254–00	10 – 27
	11 – 27
	12 – 28
EL8–48254–10	9 – 29
701–48255–00	5 – 21
	6 – 21
EL8–48259–00	9 – 7
	10 – 7
	11 – 7
	12 – 7
6X0–48261–00	12 – 18
6X5–48261–00	13 – 4
701–48261–00	5 – 37
704–48261–00	9 – 17
	10 – 15
	11 – 15
703–48261–01	8 – 2
701–48261–10	5 – 37
703–48261–11	7 – 2
701–48261–20	6 – 37
6X0–48262–00	12 – 9
704–48262–00	9 – 8
	10 – 8
	11 – 8
702–48263–00	12 – 40
6X0–48264–00	12 – 10
6X5–48264–00	13 – 8

PART NO.	REF. NO.
6X6–48264–00	18 – 39
	19 – 45
	20 – 45
	22 – 30
703–48264–00	7 – 6
	8 – 6
704–48264–00	9 – 9
	10 – 9
	11 – 9
6X0–48265–00	12 – 8
6X5–48265–00	13 – 11
703–48265–00	7 – 9
	8 – 9
704–48265–00	9 – 4
	10 – 4
	11 – 4
701–48266–00	5 – 29
	6 – 29
704–48266–00	9 – 10
	12 – 13
6X5–48267–00	13 – 43
	13 – 83
6X6–48267–00	18 – 37
	19 – 43
	20 – 43
	22 – 31
701–48268–00	5 – 18
	6 – 18
703–48268–00	7 – 5
	8 – 5
	13 – 7
6X5–48271–00	13 – 3
701–48271–00	5 – 34
	6 – 34
703–48271–00	7 – 60
	8 – 60
704–48271–00	10 – 22
	11 – 22
EL8–48271–00	12 – 22
701–48271–10	5 – 34
	6 – 34
EL8–48271–10	9 – 24
703–48272–17	2 – 1
	7 – 1
EL8–48279–00	9 – 49
	10 – 47
	11 – 47
	12 – 41

PART NO.	REF. NO.
701–48280–00	5 – 48
	6 – 48
6X0–48281–00	12 – 62
703–48281–00	7 – 31
	8 – 31
704–48281–00	9 – 15
	10 – 13
	11 – 13
	12 – 70
EL8–48281–00	9 – 13
	10 – 11
	11 – 11
	12 – 16
701–48281–10	5 – 16
	6 – 16
701–48282–00	5 – 28
	6 – 28
703–48282–00	7 – 32
	8 – 32
704–48282–00	9 – 58
701–48283–00	5 – 46
	6 – 46
704–48283–00	9 – 19
	10 – 17
	11 – 17
	19 – 49
	20 – 49
703–48284–00	7 – 52
	8 – 52
704–48284–00	9 – 61
703–48284–10	7 – 52
	8 – 52
704–48284–P0	10 – 57
	11 – 57
704–48285–10	11 – 65
701–48287–00	5 – 44
	6 – 44
	7 – 42
	8 – 42
	12 – 66
	22 – 64
702–48287–00	7 – 64
	8 – 65
704–48287–00	9 – 22
	10 – 20
	11 – 20
	13 – 46
	18 – 40

PART NO.	REF. NO.
704–48287–00	19 – 46
	20 – 46
	22 – 32
6X0–48288–00	12 – 52
702–48288–00	5 – 23
	6 – 23
701–48289–00	5 – 17
	6 – 17
703–48291–10	7 – 39
	8 – 39
6X5–48293–00	13 – 87
703–48293–00	7 – 41
	8 – 41
704–48293–00	3 – 4
703–48293–10	7 – 41
	8 – 41
704–48293–20	3 – 4
704–48293–30	3 – 7
701–48310–10	14 – 1
701–48310–20	14 – 1
701–48310–40	14 – 1
701–48310–60	14 – 1
701–48310–80	14 – 1
701–48310–90	14 – 1
6X5–48317–00	13 – 76
6X5–48317–10	13 – 77
701–48320–00	14 – 1
701–48320–20	14 – 1
701–48320–30	14 – 1
701–48320–40	14 – 1
701–48320–50	14 – 1
701–48320–60	14 – 1
701–48320–70	14 – 1
701–48320–80	14 – 1
701–48320–90	14 – 1
647–48330–50	39 – 10
648–48330–50	42 – 15
617–48331–91	39 – 14
	42 – 19
6X5–48338–00	13 – 78
6X5–48338–10	13 – 79
647–48340–50	39 – 16
648–48340–50	42 – 9
663–48344–00	40 – 8
	44 – 2
	45 – 12
	45 – 14
	46 – 12

PART NO.	REF. NO.
663–48344–00	46 – 16
	47 – 12
	48 – 17
	48 – 29
703–48345–01	5 – 36
	6 – 36
	7 – 19
	8 – 19
	9 – 21
	10 – 19
	11 – 19
	12 – 21
	13 – 21
647–48346–50	39 – 17
648–48346–50	42 – 16
617–48346–90	39 – 11
	42 – 10
701–48350–00	14 – 1
701–48350–10	14 – 1
701–48350–20	14 – 1
701–48350–30	14 – 1
701–48350–40	14 – 1
701–48350–50	14 – 1
701–48350–60	14 – 1
6X5–48351–00	13 – 54
6X5–48354–00	13 – 59
6X5–48358–00	13 – 25
701–48358–00	5 – 38
	6 – 38
703–48358–00	7 – 20
	8 – 20
	9 – 26
	10 – 24
	11 – 24
	12 – 24
617–48361–91	39 – 20
	42 – 13
63V–48501–00	40 – 1
65W–48501–00	47 – 1
6AH–48501–00	46 – 1
6AU–48501–00	45 – 1
6BL–48501–00	48 – 1
66T–48501–01	44 – 1
689–48501–01–4D	42 – 1
655–48501–02	39 – 1
6J8–48501–03–4D	43 – 1
655–48501–10	39 – 1
6J8–48501–11	43 – 1

PART NO.	REF. NO.
6L2–48501–11	41 – 1
689–48501–21–4D	42 – 1
700–48510–12	39 – 22
	42 – 21
	51 – 13
65W–48511–00	44 – 7
	47 – 19
	48 – 7
67F–48511–00	50 – 11
68V–48511–00	50 – 14
6AH–48511–00	50 – 5
6G8–48511–00	51 – 14
6L2–48511–00	49 – 1
63V–48511–01	50 – 1
676–48511–01	49 – 6
689–48511–01	42 – 22
	51 – 9
6J8–48511–01–4D	51 – 8
63D–48511–10	49 – 11
65W–48511–10	50 – 10
676–48511–10	39 – 23
	51 – 1
69G–48511–10	51 – 17
6G8–48511–10	51 – 5
688–48511–11	49 – 12
6J8–48511–51–4D	49 – 5
63V–48531–00	40 – 2
68T–48531–00	45 – 2
6AH–48531–00	46 – 14
6J8–48531–00	43 – 9
6L2–48531–00	41 – 11
689–48531–50	42 – 2
655–48531–51	39 – 2
6AH–48532–00	46 – 7
6J8–48532–00	43 – 10
689–48532–50	42 – 3
63V–48534–00	40 – 18
6J8–48534–00	43 – 3
6L2–48534–01	41 – 3
647–48534–50	39 – 5
648–48534–50–4D	42 – 6
6BL–48538–00	48 – 8
6H3–48538–00	44 – 4
	47 – 14
682–48538–50	40 – 3
	41 – 12
	43 – 11
	45 – 3

PART NO.	REF. NO.
682–48538–50	46 – 9
63V–48544–00	40 – 20
6J8–48544–01	43 – 4
6L2–48544–01	41 – 2
6E5–61301–01	61 – 1
6E5–61303–00	61 – 5
6E5–61311–11	61 – 3
6E5–61313–00	61 – 2
6E5–61315–00	61 – 4
63D–61350–00	56 – 1
63V–61350–00	52 – 1
65W–61350–00	57 – 1
67F–61350–00	59 – 1
697–61350–00	58 – 1
6AH–61350–00	54 – 1
6BG–61350–00	62 – 1
689–61350–02	55 – 1
6E5–61350–02	60 – 1
688–61350–10	58 – 1
68T–61350–10	53 – 1
63D–61351–00	56 – 2
65W–61351–00	57 – 2
697–61351–00	58 – 2
689–61351–01	55 – 2
6E5–61351–01	60 – 2
688–61351–10	58 – 2
6E5–61355–00	52 – 6
	53 – 6
	54 – 6
	55 – 7
	58 – 8
	60 – 5
6X6–81145–00	18 – 41
	19 – 79
	20 – 78
6X6–81146–00	18 – 72
	19 – 78
	20 – 77
6X1–81870–00	25 – 2
	30 – 2
	32 – 2
68V–81950–00	29 – 8
	31 – 12
704–81950–10	11 – 58
	13 – 72
	18 – 65
	19 – 71
	20 – 71

PART NO.	REF. NO.
704–81950–10	22 – 50
6X3–81971–00	35 – 1
6X3–81971–10	35 – 2
6K1–81980–00	27 – 18
703–82119–00	31 – 11
688–82388–00	35 – 5
6X5–82507–00	31 – 10
6Y8–82507–00	29 – 9
61B–82510–01	28 – 4
6X5–82510–01	31 – 2
6R5–82510–02	24 – 4
6Y8–82510–02	29 – 3
64D–82510–03	33 – 4
703–82510–03	8 – 44
6K1–82510–06	27 – 3
704–82510–07	23 – 4
	26 – 2
	34 – 1
703–82510–12	8 – 44
703–82510–33	7 – 44
	8 – 44
703–82510–43	7 – 44
	8 – 44
6X6–8252S–00	20 – 87
	22 – 54
6X6–8252V–00	18 – 64
	19 – 70
	20 – 70
	22 – 42
703–82531–00	7 – 46
	8 – 46
6K1–82532–00	23 – 6
	26 – 4
	27 – 5
	33 – 6
	34 – 3
6X5–82540–00	13 – 47
6X6–82540–00	18 – 60
	19 – 66
	20 – 66
	22 – 27
703–82540–00	7 – 50
	8 – 50
704–82540–00	12 – 14
6X6–82540–10	19 – 81
	20 – 80
704–82540–20	9 – 11
	10 – 10

PART NO.	REF. NO.
704–82540–30	11 – 10
704–82541–10	12 – 71
703–82542–00	7 – 63
	8 – 63
	8 – 63
	8 – 63
6X6–82545–00	18 – 63
	19 – 69
	20 – 69
6X7–82545–00	22 – 26
6X1–82550–00	25 – 3
	30 – 3
	32 – 3
682–82556–00	5 – 40
	6 – 40
	7 – 48
	8 – 48
	12 – 69
	23 – 8
	24 – 7
	25 – 5
	26 – 6
	27 – 7
	28 – 7
	29 – 6
	30 – 5
	31 – 5
	32 – 5
	33 – 20
	34 – 11
	34 – 13
	35 – 3
6X6–82563–00	18 – 2
	19 – 2
	20 – 2
6X7–82563–00	22 – 2
6X3–82563–01	12 – 51
6X5–82563–01	13 – 48
703–82563–02	7 – 55
	8 – 55
688–82563–10	35 – 4
6X6–82563–10	19 – 26
	20 – 26
6X5–82563–11	13 – 49
703–82563–12	7 – 55
	8 – 55
6X6–82563–20	19 – 80
	20 – 79

PART NO.	REF. NO.
6X5–82563–21	13 – 50
6X6–82563–30	20 – 81
6X5–82563–31	13 – 51
704–82563–41	9 – 36
	10 – 34
704–82563–51	11 – 34
704–82563–H1	11 – 61
704–82563–J1	11 – 64
6X6–82570–00	15 – 3
	25 – 1
6X5–82570–01	17 – 2
	31 – 1
6Y8–82570–02	16 – 2
	29 – 1
61B–82570–03	28 – 1
64D–82570–03	33 – 1
6R5–82570–05	15 – 2
	24 – 1
6K1–82570–08	27 – 1
704–82570–08	23 – 1
64D–82570–10	33 – 16
6X6–82570–10	16 – 3
	30 – 1
64D–82570–20	21 – 2
	33 – 1
6X6–82570–20	17 – 3
	32 – 1
64D–82570–30	33 – 16
6X6–82570–A0	15 – 4
	16 – 4
	17 – 4
	25 – 7
	30 – 7
	31 – 13
	32 – 7
64D–82571–00	33 – 2
6X5–82571–00	31 – 6
6Y8–82571–01	29 – 2
6K1–82571–02	27 – 2
	28 – 2
704–82571–02	23 – 2
	24 – 2
64D–82571–10	33 – 17
64D–82575–00	33 – 19
6K1–82575–00	27 – 6
	28 – 6
	29 – 5
	30 – 4

PART NO.	REF. NO.
6X3–82575–00	12 – 68
6X5–82575–00	31 – 4
6X6–82575–00	32 – 4
6X7–82575–00	22 – 45
688–82575–01	7 – 47
	8 – 47
	23 – 7
	24 – 6
	25 – 4
	26 – 5
	34 – 10
64D–82575–10	33 – 19
	34 – 12
701–82575–53	5 – 39
	6 – 39
676–82577–00	8 – 45
	24 – 5
	28 – 5
	29 – 4
	31 – 3
703–82577–00	7 – 45
	8 – 45
	23 – 5
	26 – 3
	27 – 4
	33 – 5
	34 – 2
6X3–8257B–00	34 – 4
704–8257C–00	26 – 1
689–8257Y–00	5 – 41
	6 – 41
6X6–8257Y–60	18 – 57
64D–82581–00	23 – 9
	24 – 8
	26 – 7
	29 – 10
	33 – 7
	34 – 5
6X5–82581–00	31 – 8
6X6–82581–00	20 – 89
	22 – 56
6X6–82582–30	18 – 55
	19 – 63
	20 – 63
6X6–82582–40	18 – 54
	19 – 62
	20 – 62
6X6–82582–60	18 – 53

PART NO.	REF. NO.
6X6–82582–60	19 – 61
	20 – 61
6X6–82582–B0	18 – 56
	19 – 64
	20 – 64
6X6–82584–00	20 – 88
	22 – 55
6X6–82585–20	18 – 52
	19 – 60
	20 – 60
	22 – 47
688–82586–11	36 – 6
688–82586–21	7 – 49
	8 – 49
688–82586–31	36 – 6
688–82586–50	36 – 1
64D–82588–00	33 – 3
61B–82588–01	28 – 3
6R5–82588–01	23 – 3
	24 – 3
64D–82588–10	33 – 18
703–8258A–00	36 – 3
61B–8258A–01	36 – 2
688–8258A–10	36 – 7
6X6–8258A–10	37 – 1
688–8258A–20	7 – 49
	8 – 49
	36 – 5
6X6–8258A–20	37 – 1
688–8258A–30	36 – 7
6X6–8258A–30	37 – 1
6K1–8258A–40	36 – 2
6X6–8258A–40	37 – 1
688–8258A–50	36 – 2
688–8258A–60	36 – 2
6X6–8258A–A0	37 – 2
6X6–8258A–B0	37 – 3
6X6–8258A–C0	37 – 2
6X6–8258A–D0	37 – 3
6X5–82590–00	13 – 82
6X6–82590–00	18 – 51
6X7–82590–00	22 – 48
6X6–82590–10	19 – 59
6X7–82590–10	22 – 46
704–82590–10	11 – 59
6X6–82590–20	18 – 51
	38 – 2
6X6–82590–30	19 – 59

PART NO.	REF. NO.
6X6–82590–30	38 – 2
6X7–82590–30	37 – 4
6X6–82590–50	18 – 51
6X6–82590–60	19 – 59
6X6–82590–80	20 – 59
6X6–82590–90	20 – 59
6X6–82591–00	20 – 86
	22 – 53
703–82591–00	7 – 53
	7 – 53
	8 – 53
	8 – 53
	13 – 52
	18 – 47
	18 – 47
	19 – 55
	19 – 55
	20 – 55
	22 – 41
	38 – 3
	38 – 3
703–82592–00	7 – 54
	8 – 54
701–82594–00	5 – 47
	6 – 47
703–82594–00	7 – 25
	8 – 25
704–82594–00	9 – 35
	10 – 33
	11 – 33
6X6–8259E–00	18 – 19
	19 – 22
	20 – 22
6X7–8259E–00	22 – 21
6X6–8259F–00	20 – 82
6R5–83383–00	24 – 12
	25 – 6
	28 – 12
	29 – 7
	30 – 6
	32 – 6
	34 – 9
6X4–83383–00	31 – 9
6X5–83383–00	31 – 7
703–83383–02	7 – 51
	8 – 51
688–83383–11	23 – 13
	26 – 11

PART NO.	REF. NO.
688–83383–11	27 – 12
	33 – 11
703–83383–B0	8 – 51
6K1–83614–01	27 – 8
	28 – 8
6AH–83773–00	46 – 5
6X6–84301–00	18 – 15
6X7–84301–00	22 – 22
6X6–84301–12	19 – 14
6X6–84301–22	20 – 14
6D5–84340–00	46 – 19
	48 – 31
6X6–85557–00	20 – 85
	22 – 52
6X6–85590–00	18 – 45
	19 – 53
	20 – 53
	38 – 1
	38 – 1
6X6–85590–10	18 – 45
	19 – 53
	22 – 49
704–85721–00	36 – 4
61B–85830–00	28 – 13
6K1–85830–01	27 – 13
60R–G4111–10	45 – 8
60R–G8501–00	45 – 1
90101–09M01	56 – 7
	57 – 7
	59 – 7
	62 – 6
90101–09M70	61 – 9
90105–06M23	41 – 14
90109–06M29	43 – 13
90109–06M86	46 – 15
90116–10175	50 – 12
	50 – 15
90149–05M05	23 – 14
	24 – 13
	27 – 19
	28 – 18
	33 – 12
	33 – 21
90159–05M25	40 – 21
90170–09M03	52 – 4
	53 – 4
	54 – 4
	55 – 5

PART NO.	REF. NO.
90170–09M03	56 – 5
	57 – 5
	58 – 5
	59 – 4
	62 – 4
90170–09M05	61 – 10
90170–14M06	61 – 6
90179–06M24	43 – 14
90185–08057	50 – 4
	50 – 8
	51 – 20
90185–09M01	52 – 3
	53 – 3
	54 – 3
	55 – 4
	56 – 4
	57 – 4
	58 – 4
	59 – 3
	60 – 6
	61 – 11
	62 – 3
90185–10051	39 – 26
	42 – 25
	48 – 6
	49 – 2
	50 – 13
	50 – 16
	51 – 4
	51 – 12
90201–04M06	40 – 16
90201–05M06	47 – 9
	48 – 14
90201–06M31	47 – 6
	48 – 11
	48 – 26
90201–08M12	40 – 10
90201–10120	44 – 8
	47 – 20
90201–10M02	40 – 14
90201–10M20	52 – 2
	53 – 2
	54 – 2
	55 – 3
	56 – 3
	57 – 3
	58 – 3
	59 – 2

PART NO.	REF. NO.
90201–10M20	60 – 7
	62 – 2
90201–10M63	52 – 7
	53 – 7
	54 – 7
	55 – 8
	56 – 8
	57 – 8
	58 – 7
	59 – 6
	62 – 7
90201–10M76	61 – 8
90202–05088	41 – 9
90206–10M04	40 – 13
90254–03M03	43 – 6
90254–03M04	44 – 5
90254–03M05	47 – 3
90386–10009	40 – 22
	41 – 4
90386–10025	40 – 12
90387–06139	48 – 23
90387–06M29	47 – 5
90387–06M86	48 – 10
90387–10M42	52 – 5
	53 – 5
	54 – 5
	55 – 6
	56 – 6
	57 – 6
	58 – 6
	59 – 5
	62 – 5
90387–10M61	60 – 3
90446–09M42	48 – 32
90465–11M10	46 – 3
90465–13M18	46 – 18
90468–10005	47 – 10
	48 – 15
90468–18001	48 – 16
90468–18008	40 – 9
	44 – 3
	45 – 13
	45 – 15
	46 – 13
	46 – 17
	47 – 11
	47 – 13
	48 – 18

PART NO.	REF. NO.
90468–18008	48 – 30
90480–19031	46 – 8
90501–10071	39 – 13
	42 – 18
90501–10264	39 – 19
	42 – 12
90508–20040	48 – 20
90560–12M01	60 – 4
91490–20010	40 – 17
	41 – 10
91690–30012	39 – 15
	39 – 21
	40 – 4
	41 – 13
	42 – 14
	42 – 20
	43 – 12
	45 – 4
	46 – 10
92780–06020	9 – 30
	10 – 28
	11 – 28
	12 – 29
92780–06025	5 – 20
	6 – 20
92903–05100	23 – 11
	24 – 10
	24 – 15
	26 – 9
	29 – 12
	33 – 9
	34 – 7
92903–05600	24 – 16
92990–05100	23 – 16
	27 – 10
	27 – 21
	28 – 10
	28 – 20
	33 – 14
	33 – 23
92990–05200	13 – 84
	18 – 20
	19 – 23
	20 – 23
	22 – 60
92990–05300	9 – 38
	10 – 36
	11 – 36

PART NO.	REF. NO.
92990–05300	12 – 61
	13 – 70
	18 – 8
	19 – 9
	20 – 9
92990–05600	23 – 17
	27 – 22
	28 – 21
	33 – 15
	33 – 24
92990–06100	27 – 16
	28 – 16
92990–06300	5 – 25
	6 – 25
	9 – 48
	10 – 46
	11 – 46
92990–06600	27 – 17
	28 – 17
92990–08100	43 – 2
92990–08200	13 – 38
92990–08600	7 – 34
	8 – 34
	13 – 69
	18 – 10
	19 – 11
	20 – 11
	22 – 10
	39 – 12
	39 – 18
	42 – 11
	42 – 17
92990–10100	49 – 8
92990–10600	12 – 6
	39 – 25
	42 – 24
	49 – 3
	49 – 9
	51 – 3
	51 – 11
92995–05600	39 – 7
	45 – 11
92995–06600	39 – 4
	40 – 6
	42 – 5
	42 – 8
	45 – 6
	51 – 7

PART NO.	REF. NO.
92995–06600	51 – 16
92995–08600	50 – 3
	50 – 7
	51 – 19
92D80–05016	18 – 23
	19 – 28
	20 – 28
93210–12327	45 – 9
93210–16275	52 – 9
	53 – 9
	54 – 9
	55 – 10
	56 – 10
	57 – 10
	58 – 10
	59 – 9
	60 – 9
	62 – 9
93430–06024	5 – 35
	6 – 35
	7 – 10
	8 – 10
	9 – 6
	10 – 6
	11 – 6
	12 – 5
	13 – 12
93700–06M03	48 – 5
95303–05600	24 – 14
95303–05700	23 – 12
	24 – 11
	26 – 10
	29 – 13
	33 – 10
	34 – 8
95380–05600	7 – 7
	8 – 7
	9 – 23
	10 – 21
	11 – 21
	13 – 9
	18 – 50
	19 – 58
	20 – 58
	23 – 15
	27 – 11
	27 – 20
	28 – 11

PART NO.	REF. NO.
95380–05600	28 – 19
	33 – 13
	33 – 22
95380–06600	5 – 45
	6 – 45
	7 – 40
	8 – 40
	9 – 39
	10 – 37
	11 – 37
	12 – 12
	13 – 75
	27 – 15
	28 – 15
	39 – 9
	40 – 7
	45 – 7
95380–10600	49 – 10
95380–14700	61 – 7
95780–06300	13 – 44
95780–08300	40 – 19
	41 – 5
97075–08035	50 – 2
	51 – 18
97075–10040	39 – 24
	42 – 23
	49 – 4
	49 – 7
	51 – 2
	51 – 10
97090–06045	39 – 8
97095–05016	45 – 10
97095–05020	39 – 6
97095–06012	42 – 7
	45 – 5
97095–06016	40 – 5
	42 – 4
	51 – 6
	51 – 15
97095–06018	39 – 3
97095–06025	48 – 28
97095–06065	48 – 27
97095–08025	50 – 6
97303–05012	23 – 10
	24 – 9
	26 – 8
	29 – 11
	33 – 8

PART NO.	REF. NO.
97303–05012	34 – 6
97380–05025	7 – 8
	8 – 8
	13 – 10
97380–06018	9 – 20
	10 – 18
	11 – 18
	12 – 20
97380–08030	7 – 33
	8 – 33
	13 – 37
97390–06018	5 – 22
	6 – 22
97595–06514	46 – 11
97595–06525	47 – 7
97595–06530	46 – 6
97595–06535	48 – 12
97780–05130	13 – 57
97780–06230	22 – 62
97780–40116	35 – 6
97780–50145	3 – 6
	3 – 9
	18 – 48
	19 – 56
	20 – 56
97890–05016	9 – 65
	10 – 62
	10 – 62
	11 – 70
	12 – 3
97890–05025	9 – 16
	10 – 14
	11 – 14
	12 – 17
97890–06018	9 – 47
	10 – 45
	11 – 45
97890–06035	12 – 64
98580–03015	7 – 38
	8 – 38
	12 – 15
	13 – 42
98580–04006	7 – 36
	8 – 36
	12 – 31
	13 – 40
98580–04010	7 – 35
	7 – 35

PART NO.	REF. NO.
98580–04010	8 – 35
	8 – 35
	18 – 22
	19 – 27
	20 – 27
98580–05008	12 – 50
98580–05010	5 – 32
	6 – 32
	7 – 37
	8 – 37
	13 – 55
98580–05012	13 – 56
	13 – 86
98580–05014	18 – 7
	19 – 8
	20 – 8
	22 – 59
98580–05020	5 – 43
	6 – 43
98580–05025	19 – 47
	20 – 47
	22 – 58
98580–05040	13 – 57
98580–05060	3 – 5
	3 – 8
	18 – 49
	19 – 57
	20 – 57
98780–04010	13 – 45
98780–05010	20 – 84
98780–05014	18 – 42
	19 – 50
	20 – 50
98780–05018	9 – 31
	10 – 29
	11 – 29
98780–06035	22 – 61
98980–05010	27 – 9
	28 – 9
98980–06020	27 – 14
	28 – 14

PART NO.	REF. NO.

PART NO.	REF. NO.